Trials@uspto.gov
571-272-7822

Paper 24
Entered: December 6, 2018

UNITED STATES PATENT AND TRADEMARK OFFICE

BEFORE THE PATENT TRIAL AND APPEAL BOARD

DAIMLER AG, DAIMLER NORTH AMERICA CORPORATION, MERCEDES-BENZ USA, LLC, AND MERCEDES-BENZ U.S. INTERNATIONAL, INC.,
Petitioner,

v.

STRAGENT, LLC,
Patent Owner.

Case IPR2017–01502
Patent 8,209,705 B2

Before LYNNE E. PETTIGREW, PATRICK M. BOUCHER, and CARL L. SILVERMAN, *Administrative Patent Judges*.

SILVERMAN, *Administrative Patent Judge*.

FINAL WRITTEN DECISION
35 U.S.C. § 318(a) and 37 C.F.R. § 42.73

BMW EXHIBIT 1018

I. INTRODUCTION

In response to a Petition (Paper 2, "Pet.") filed by Daimler North America Corporation, Mercedes-Benz USA, LLC, and Mercedes-Benz U.S. International, Inc. (collectively, "Petitioner"), we instituted an *inter partes* review of claims 8–19 of U.S. Patent No. 8,209,705 B2 ("the '705 patent"). Paper 7 ("Dec.").

During the trial, Stragent, LLC ("Patent Owner") timely filed a Response (Paper 10, "PO Resp."), to which Petitioner timely filed a Reply (Paper 18, "Reply"). An oral hearing was held on September 11, 2018, and a copy of the transcript was entered into the record. Paper 23 ("Tr.").[1]

We have jurisdiction under 35 U.S.C. § 6. This Decision is a Final Written Decision under 35 U.S.C. § 318(a) as to the patentability of the claims on which we instituted trial. Based on the record before us, Petitioner has shown, by a preponderance of the evidence, that claims 8–19 are unpatentable.

II. BACKGROUND

A. Real Parties in Interest and Related Matters

The real party-in-interest for Patent Owner is Stragent, LLC, the assignee of U.S. Patent No. 8,209,705. Paper 4.

[1] The hearing was a consolidated hearing for IPR2017-01502, IPR2017-01503, and IPR2017-01504.

The real parties-in-interest for Petitioner are Daimler AG, Daimler North America Corporation, Mercedes-Benz USA, LLC, and Mercedes-Benz U.S. International, Inc. Pet. 87.

IPR2017-00458, also filed by Petitioner, challenges claims of U.S. Patent No. 8,209,705 ("the '705 patent"). IPR2017-00457, also filed by Petitioner, challenges claims of related U.S. Patent No. 8,566,843 ("the '843 patent"), the application that issued as the '843 patent being a continuation of the application that issued as the '705 patent.

The following *inter partes* reviews challenge claims of the '843 patent or the '705 patent: IPR2017-00676, IPR2017-00677, IPR2017-01502, IPR2017-01503, IPR2017-01504, IPR2017-01519, IPR2017-01520, IPR2017-01521, and IPR2017-01522.

Patent Owner has asserted the '705 Patent in three separate suits: *Stragent, LLC, v. Mercedes-Benz USA, LLC*, No. 6:16-cv-00447 (E.D. Tex. May, 20, 2016); *Stragent, LLC v. BMW of North America, LLC*, Civ. No. 6:16-CV-00446 (E.D. Tex. May 20, 2016); and *Stragent, LLC v. Volvo Cars of North America, LLC*, Civ. No. 6:16-CV-00448 (E.D. Tex. May 20, 2016). Pet. 87; Paper. 4.

B. The '705 Patent

The '705 patent relates to sharing information in a distributed system. Ex. 1001, Abstract. Data between networks is shared using a common "bulletin board" memory. *Id.* The system includes at least two different networks, each of which is either a **C**ontroller **A**rea **N**etwork ("CAN"), FlexRay, or **L**ocal **I**nterconnect **N**etwork ("LIN"). *Id.* at 3:24–33. The

system described in the ’705 patent may be used in “vehicle communication and control systems, real-time monitoring systems, industrial automation and control systems, as well as any other desired system.” *Id.* at 1:22–25. An example is provided in Figure 1 of the ’705 patent, which is reproduced below.

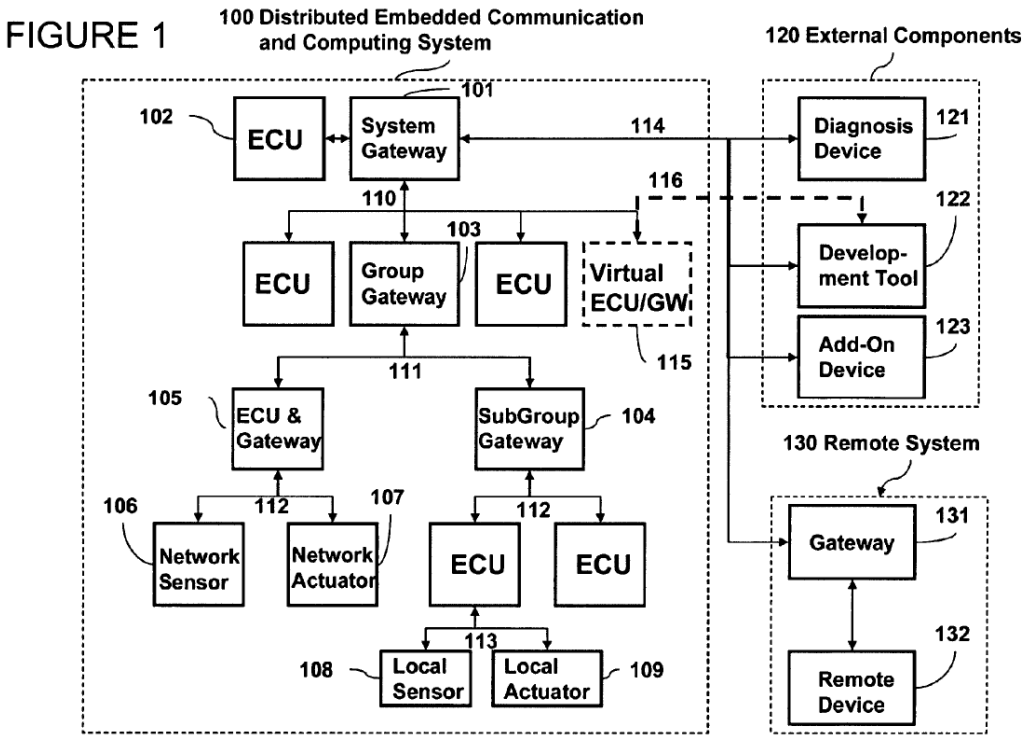

Figure 1 generally depicts elements of a distributed embedded communication and computing system. *Id.* at 3:9–11.

In an automotive environment, various electronic control units (“ECUs”) control such applications as engine control, brake control, or diagnostics through connections to various sensors and actuators organized into separate subnetworks. *Id.* at 3:13–18. Such applications are themselves grouped into backbone system functions, such as “body control, power train,

and chassis." *Id.* at 3:19–21. With a hierarchical organization that includes gateways 101, 104, 105, messages are relayed up and down through the system layers. *Id.* at 3:24–26. Each layer may contain multiple ECUs connected through wired serial multiplexing bus systems, with the '705 patent noting several examples that include Controller Area Network ("CAN"), Local Interconnect Network ("LIN"), and Flexray. *Id.* at 3:26–33.

At the highest level in the hierarchy, "the system level," system gateway 101 is connected via various busses to other system-level ECUs, to subsequent gateways 103, and to external components 120. *Id.* at 3:60–67. In addition, system gateway 101 may be connected to external gateway 131 to link the system to remote device 132. *Id.* at 4:1–6. "Subsequent to the system level may be several layers of groups and subgroups that are link[ed] to the higher levels via gateways (101, 103, 104, 105)." *Id.* at 4:7–9.

In operation, ECU 102 receives "real-time" input variables from local sensors 108 or from networked sensors 106, respectively via signal lines 113 or multiplexing bus system 112. *Id.* at 3:39–42. "[R]eal-time may include any response time that may be measured in milli- or microseconds, and/or is less than 1 second." *Id.* at 3:36–38. ECU 102 processes the input variables and generates output variables that may be shared with other ECUs 102. *Id.* at 3:46–51. Two relevant modes of sharing are described.

First, ECUs 102 "typically share information with devices that are connected on the same physical multiplexing system. This method of information sharing is called horizontal information sharing in a hierarchical system." *Id.* at 3:51–55.

Second, a bulletin board may be used so that "the information is shared, in real-time, among a plurality of heterogeneous processes." *Id.* at 1:31–33. According to the '705 patent, "heterogeneous networks may refer to any different communication networks with at least one aspect that is different." *Id.* 7:27–29.

The logical architecture of the system described in the '705 patent is described below in annotated Figure 7[2] (Pet. 31):

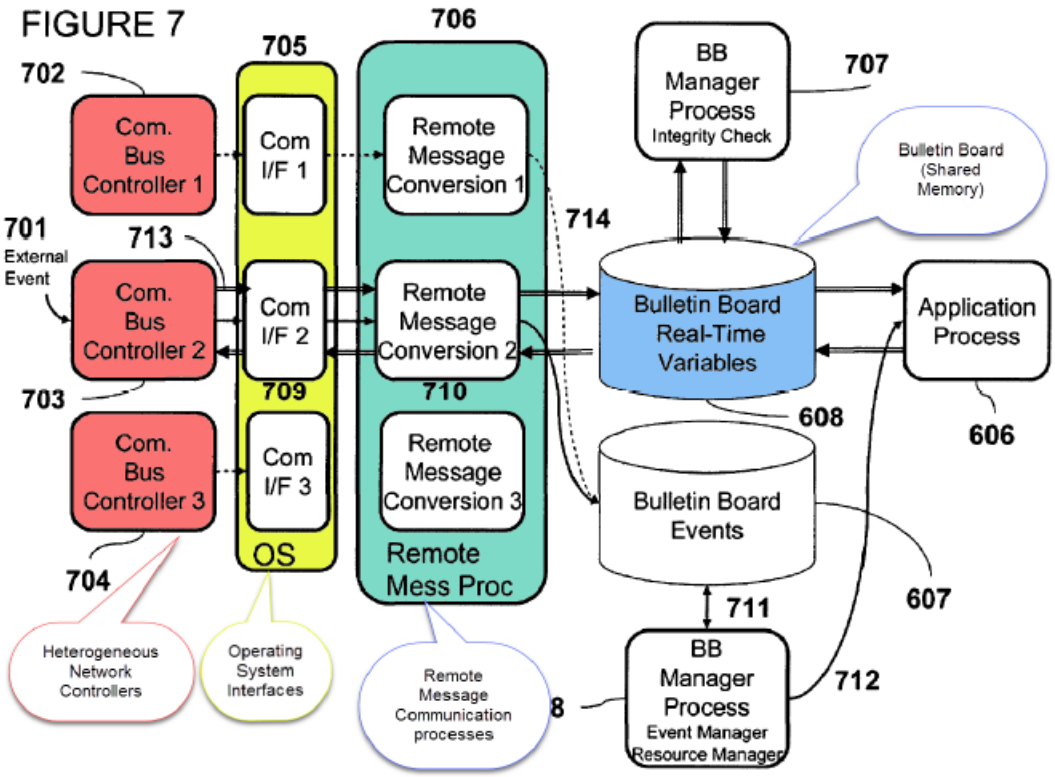

[2] Figures from the '705 patent and cited references are shown with Petitioner's annotations as set forth in the Petition. Petitioner contends identified features are shown in the annotations. We rely on the Figures as presented in the '705 patent and the references.

Figure 7 depicts a bulletin board that interacts with multiple communication buses.

The system architecture includes four main components: (1) network interfaces for each of the heterogeneous networks (red); (2) operating interfaces for each of the heterogeneous networks (yellow); (3) remote message processes for stripping out network-specific information (green); and (4) a real-time, bulletin board-type shared memory (blue). Ex. 1001, 6:33–7:3.

In operation, an external event (for example, a flag indicating that data from a sensor is available) is transmitted on a network to a communication bus controller (*e.g.*, 703). *Id.* at 7:5–8. This causes an operating system interface (*e.g.*, 709) to notify the message communication process (*e.g.*, 710) that data is available. *Id.* The data is sent over the network as a network specific message. *Id.* at 7:4–49.

C. Illustrative Claim

All the challenged claims 8–19, depend from independent claim 7, which was a challenged claim in IPR2017-00458 ("'458 IPR"). In the Final Decision in that case ("'458 FD"), we concluded that claim 7 had been shown to be unpatentable over the same combinations of prior art references asserted in this proceeding. *Daimler AG v. Stragent, LLC*, Case IPR2017-00458, (PTAB June 13, 2018) (Paper 31). Claim 7 is thus illustrative of the claims challenged in this proceeding and reads:

7. [(a)[3]] A non-transitory computer-readable medium storing a computer program product for sharing information, the computer program product comprising:

[(b)] computer code for allowing receipt of information associated with a message, utilizing a first network protocol associated with a first network;

[(c)] computer code for causing a determination as to whether a storage resource is available;

[(d)] computer code for, in the event the storage resource is not available, determining whether a timeout has been reached and causing a re-request in connection with the storage resource;

[(e)] computer code for, in the event the storage resource is available and the timeout has not been reached, causing storage of the information utilizing the storage resource;

[(f)] computer code for, in the event the timeout has been reached, causing an error notification to be sent; and

[(g)] computer code for causing the information to be shared by: in real-time, sharing the information utilizing at least one message format corresponding to a second network protocol associated with a second network which is different from the first network protocol;

[(h)] wherein the computer program product is associated with an electronic control unit with at least one gateway function, and a plurality of interface portions including:

[(i)] a first interface portion for interfacing with the first network, [(j)] the first interface portion including a first interface-related first layer part for receiving first interface-related first layer messages and a first inter- face-related second layer part, the first interface-related first layer messages being processed after which first interface-related second layer

[3] Petitioner and Patent Owner use letters (a)-(n) to designate claim 7 limitations. Where useful, we refer to these letter designations.

> messages are provided, (k)where the first network is at least one of a Controller Area Network, a Flexray network, or a Local Interconnect Network; and
> [(l)] a second interface portion for interfacing with the second network, [(m)] the second interface portion including a second interface-related first layer part for receiving second interface-related first layer messages and a second interface-related second layer part, the second interface-related first layer messages being processed after which second interface-related second layer messages are provided, [(n)] where the second network is different from the first network and is at least one of the Controller Area Network, the Flexray network, or the Local Interconnect Network.

D. Instituted Grounds of Unpatentability

We instituted trial on the following grounds (Dec. 32).

References	Basis	Challenged Claims
Posadas[4], Stewart[5], and Wense[6]	35 U.S.C. § 103(a)	8–19
Miesterfeld[7], Stewart, and Wense	35 U.S.C. § 103(a)	8–19

III. ANALYSIS

A. Claim Construction

For petitions filed before November 13, 2018, the Board interprets claims of an unexpired patent using the broadest reasonable construction in light of the specification of the patent in which they appear. *See* 37 C.F.R. § 42.100(b) (2016); *Cuozzo Speed Techs., LLC v. Lee*, 136 S. Ct. 2131, 2144–46 (2016) (upholding the use of the broadest reasonable interpretation standard).

---

[4]Posadas et al., "Communications Structure for Sensor Fusion in Distributed Real Time Systems," *Algorithms and Architectures for Real-Time Control 2000: A Proceedings volume from the 6th IFAC Workshop*, Palma de Mallorca, Spain (May 2000)1999 (Ex. 1006, "Posadas").
[5] Stewart et al., "Integration of Real-Time Software Modules for Reconfigurable Sensor-Based Control Systems," *IEEE/RSJ International Conference on Intelligent Robots and Systems*, Raleigh, North Carolina (July 1992) (Ex. 1007, "Stewart").
[6] H-C. von der Wense et al., "Building Automotive LIN Applications," *Advanced Microsystems for Automotive Applications*, 280–292 (2001) (Ex. 1008, "Wense").
[7] U.S. Patent No. 6,141,710, issued Oct. 31, 2000 (Ex. 1009, "Miesterfeld").

Petitioner contends only the term "real-time" requires construction and proposes the broadest reasonable construction of "real-time" includes "[a]ny response time that may be measured in milli- or microseconds, and/or is less than one second." Pet. 6. Petitioner contends the '705 patent specification expressly defines this term. *Id.* (citing Ex. 1001, 3:35–38). Patent Owner contends the '705 specification defines "real-time" as "any response time that may be measured in milli or microseconds, and/or is less than [one] second." PO Resp. 17. In light of the cited portion of the specification, we construe "real-time" as including responses that occur in less than one second. The first part of the quotation provided in the specification ("may be measured in milli- or microseconds") is not limiting because any response time, no matter how large or small, may be measured in milli- or microseconds.

As discussed more fully, *infra*, Patent Owner proposes construction for several additional terms and Petitioner proposes counter construction for these terms. PO Resp. 16–19. Petitioner contends, "[r]egardless of which construction is adopted, the prior art renders the claims unpatentable for the same reasons discussed below." Reply 3 n.4 (citing Ex. 1038 ¶ 24). These terms include the following:

"the information" of 7(g): Patent Owner contends "the information" refers to the same "information" of 7(b) and 7(e). PO Resp. 16. We agree.

"shared" and "sharing": Patent Owner proposes the term should be given its ordinary meaning and "sharing" is to "partake of, use, experience, occupy, or enjoy with others; to have in common." *Id.* (citing Ex. 2003, Merriam-Webster Dictionary, 10th Edition (2002)). Petitioner contends

Patent Owner's position is in conflict with the construction for "sharing" adopted by the Board in the '458 FD and that the construction for "sharing" previously adopted in that Final Decision should be applied here—"making the information available to another process." Reply 3–4 (citing '458 FD, 10–11; Ex. 1038 ¶¶ 25–27).

We are not persuaded by Patent Owner's contention. The plain language of claim 7 does not require that "the information" be stored using the "storage resource" under all conditions. The plain language of the claim *does*, though, always require the recited code for "causing the information to be shared in real-time utilizing a second network protocol associated with a second network." Ex. 1001 at 18:23–27. Nothing in this limitation requires "the information" to have been stored using the storage resource. Moreover, the '705 patent describes an embodiment in which information is shared without using a shared storage resource. *Id.* at 8:52–63, 7:40–49.

At the oral hearing, Patent Owner argued that "the information that is shared is the information that is stored because that is the last antecedent." Tr. 40:21–22. Patent Owner, however, is unable to identify sufficient legal basis for this "last antecedent" theory. *Id.* at 40:17–18 ("I am not aware of any Federal Circuit or any other governing law on this . . . .").

In addition, we note that Patent Owner has submitted a definition of "share" drawn from a technical dictionary into the record of this proceeding.

Ex. 2004.[8] We find the technical dictionary provided by Patent Owner to be more probative than the general-purpose dictionary relied on by Patent Owner.

The language of the general-purpose dictionary quoted by Patent Owner—"to partake of, use, experience, occupy, or enjoy with others; to have in common"—does not appear to contemplate the sharing of "information," which the '705 patent describes as "includ[ing] data, a signal, and/or anything else capable of being stored and shared." *See* Ex. 2003 (general definition of "share"); Ex. 1001, 3:56–59. Instead, the technical definition of "[t]o make files, directories, or folders accessible to other users over a network" is more relevant because it expressly contemplates the same context as the '705 patent, i.e., sharing over a network. Ex. 2004 (technical definition of "share").

Thus, the plain language of the claim, intrinsic evidence in the form of the written description, and extrinsic evidence in the form of a technical-dictionary definition all support a construction of information sharing that requires making the information accessible, without requiring storage of the information. We accordingly construe the various recitations of information sharing in the claims in accordance with such requirements.

---

[8] We note that, even if Patent Owner had not entered Exhibit 2004 into this proceeding, judges are free to rely on extrinsic dictionary definitions when construing claim terms, so long as the dictionary definition does not contradict any definition found in or ascertained by a reading of the patent documents. *Vitronics Corp. v. Conceptronic, Inc.*, 90 F.3d 1576, 1584 n.6 (Fed. Cir. 1996); *see Phillips v. AWH Corp.*, 415 F.3d 1303, 1322–23 (Fed. Cir. 2005) (en banc).

"protocol": Patent Owner proposes the term means a set of rules or procedures utilizing preexisting agreement as to how information will be structured and how each side will send and receive it for transmitting information between electronic devices. PO Resp.17. Petitioner proposes "protocol" is a well-understood term in computer science: "a standard that specifies the format of data as well as the rules to be followed in transmitting it." Reply 4 (citing Ex. 1041, Webster's New World Computer Dictionary (10th ed., 2003); Ex. 1038 ¶ 28). We determine the proposed constructions are similar and we select Petitioner's proposed construction as it is more clear. Our decision does not turn on nuanced distinctions between the parties' proposed constructions.

limitations 7(l), (m), and (n): Patent Owner contends the "second network" is the second network described in the antecedent limitations, which is the network referenced in limitation 7(g) as the second network utilizing a second different protocol which is the recipient of the "shared" information connected to the storage resource. PO Resp. 18. Petitioner contends there is nothing in the claim that requires the second network "receive" anything and nowhere in the claim is a "storage resource" mentioned with regard to the second network. Reply 5. According to Petitioner, the term "second network" is readily understood on its face, and does not require the additional unsupported language proposed by Patent Owner. *Id.* (citing Ex. 1038 ¶ 30).

As discussed, *infra*, we construe the second network as the network recited in the antecedent limitations, and claim 7 does not require the second

network to be the "recipient" of information or to be connected to a storage resource.

"diagnostic mode": Patent Owner contends the proper construction of this term is "an alternate mode of operation, distinct from normal operations, that still allows inspection of the system while it is running." PO Resp. 18–19. Petitioner contends the specification does not state that a diagnostic mode must be in any way "distinct from normal operations" and instead refers to "multiple modes," which include "secured configuration," "upgrade," "emergency," "debug," "fail-safe reduced operation" and "diagnostic" modes, and does not state these modes are "alternative or "distinct." Reply 5–6 (citing Ex. 1001, 11:51-67; Ex. 1038 ¶ 34). Petitioner contends the term "diagnostic mode" is a well-understood phrase with an understood, ordinary meaning: "a mode that is designed to determine whether a computer system is functioning properly or to detect programming errors" and Patent Owner's expert admitted that this was one, reasonable definition. *Id.* at 6–7 (citing Ex. 1039, 66:21–67:4; Ex. 1038 ¶¶ 32, 33). Petitioner observes that the specification does not define the terms as proposed by Patent Owner. *Id.*

As discussed *infra*, we have considered the claim construction of the term "diagnostic mode" proposed by Patent Owner and Petitioner and we construe "diagnostic mode" as a mode, distinct from normal operation, that allows inspection of the system while it is running.

"bulletin board": Petitioner contends the '705 patent describes a bulletin board as "any data base that enables users to send and/or read electronic messages, file, and/or other data that are of general interest and/or

addressed to no particular person/process." Pet. 42, 77–78 (citing Ex. 1001, 5:10–14). We adopt this construction as it is reasonable and Patent Owner does not specifically contest this construction.

B. Legal Principles

A claim is unpatentable for obviousness under 35 U.S.C. § 103 if the differences between the claimed subject matter and the prior art are "such that the subject matter as a whole would have been obvious at the time the invention was made to a person having ordinary skill in the art to which said subject matter pertains." *KSR Int'l Co. v. Teleflex Inc.*, 550 U.S. 398, 406 (2007). The question of obviousness is resolved on the basis of underlying factual determinations, including: (1) the scope and content of the prior art; (2) any differences between the claimed subject matter and the prior art; (3) the level of skill in the art; and (4) objective evidence of non-obviousness, i.e., secondary considerations.[9] *Graham v. John Deere Co.*, 383 U.S. 1, 17–18 (1966).

Additionally, the obviousness inquiry typically requires an analysis of "whether there was an apparent reason to combine the known elements in the fashion claimed by the patent at issue." *KSR*, 550 U.S. at 418 (citing *In re Kahn*, 441 F.3d 977, 988 (Fed. Cir. 2006) (requiring "articulated reasoning with some rational underpinning to support the legal conclusion of obviousness")); *see In re Warsaw Orthopedic, Inc.*, 832 F.3d 1327, 1333

[9] The parties do not address secondary considerations, which, accordingly, do not form part of our analysis.

(Fed. Cir. 2016) (citing *DyStar Textilfarben GmbH & Co. Deutschland KG v. C. H. Patrick Co.*, 464 F.3d 1356, 1360 (Fed. Cir. 2006)).

To prevail on its challenges, Petitioner must demonstrate by a preponderance of the evidence that the claims are unpatentable. 35 U.S.C. § 316(e); 37 C.F.R. § 42.1(d). "In an [*inter partes* review], the petitioner has the burden from the onset to show with particularity why the patent it challenges is unpatentable." *Harmonic Inc. v. Avid Tech., Inc.* 815 F.3d 1356, 1363 (Fed. Cir. 2016) (citing 35 U.S.C. § 312(a)(3) (requiring *inter partes* review petitions to identify "with particularity . . . the evidence that supports the grounds for the challenge to each claim")). This burden never shifts to Patent Owner. *See Dynamic Drinkware, LLC. v. Nat'l Graphics, Inc.*, 800 F.3d 1375, 1378 (Fed. Cir. 2015) (citing *Tech. Licensing Corp. v. Videotek, Inc.*, 545 F.3d 1316, 1326–27 (Fed. Cir. 2008)) (discussing the burden of proof in *inter partes* review). Furthermore, Petitioner does not satisfy its burden of proving obviousness by employing "mere conclusory statements." *In re Magnum Oil Tools Int'l, Ltd.*, 829 F.3d 1364, 1380 (Fed. Cir. 2016).

C. Level of Skill in the Art

Petitioner's declarant, Philip Koopman, Ph.D., asserts that a person of ordinary skill in the art "would have at least an undergraduate degree in Computer Engineering, Computer Science, or equivalent degree, and at least two years relevant experience in industry." Ex. 1004 ¶¶ 47–48.

Patent Owner's Declarant, Jeffrey A. Miller, Ph.D, asserts that a person of ordinary skill in the art would have at least the qualifications of or

equivalent to either a master's degree in electrical engineering, computer science, or computer engineering with course work or research in embedded networking technologies or an undergraduate degree in electrical engineering, computer science, or computer engineering with at least two years of relevant work experience in industry. Ex. 2006 ¶ 20.

The principal difference between the parties' proposals is that, as an alternative to an undergraduate degree and two years of relevant work experience, Patent Owner's proposal allows for a master's degree with course work or research in embedded networking technologies. Based on our review of the '705 patent and the prior art of record, we find that a master's degree with relevant course work or research is equivalent to a bachelor's degree with two years of relevant work experience. We therefore adopt Patent Owner's expression of the level of skill in the art, which encompasses both alternative sets of qualifications.

D. Obviousness over Posadas, Stewart, and Wense Claims 8–19

Petitioner contends that claims 8–19 are unpatentable under 35 U.S.C. § 103(a) as obvious over Posadas, Stewart, and Wense. Pet. 12–51. Relying on the testimony of Dr. Koopman, Petitioner explains how the combination of Posadas, Stewart, and Wense allegedly teaches all the claim limitations and contends a person having ordinary skill in the art would have combined the teachings of the references. *Id.* (citing Ex. 1004).

1. Posadas

Posadas describes a real-time communications system implemented in an autonomous industrial robot referred to as YAIR (Yet Another Intelligent Robot). Ex. 1006, 8. YAIR includes a number of sensors that are interconnected using two different, real-time networks. *Id.* at 8–11; Fig. 1. The first network, referred to as the "reactive level," is described as "Hard Real-Time," and uses distributed CAN objects on a CAN bus. *Id.* The second network, referred to as the "deliberative level," is described as "Soft Real-Time," and uses the IP protocol on an Ethernet Bus. *Id.* The two networks share information using a "blackboard" shared memory. *Id.* at 10–11.

2. Stewart

Stewart discloses a framework for integrating real-time software control modules that comprise a reconfigurable multi-sensor based system. Ex. 1007, 6. Stewart discloses the use of a real time embedded system in a distributed environment that uses a shared, global memory. *Id.* at 10, 12.

3. Wense

Wense describes the use of different networks in automobiles, including CAN, LIN, FlexRay, and J1850, and describes the use of CAN and LIN in a single automotive network. Ex. 1008, Abstract, 10–13, Fig. 3.

4. Analysis

Petitioner asserts that the combination of Posadas, Stewart, and Wense teaches all of the limitations of independent claim 7.

Claims 8–19 depend from independent claim 7, which is a challenged claim in the ’458 IPR, and not directly challenged in the current Petition. The references for each ground in the current Petition are the same as set forth in the petition filed in the ’458 IPR. The same Declarant (Prof. Koopman) is utilized to support Petitioner’s contentions. Exhibit 1004.

In a Final Decision in the ’458 IPR (’458 FD), we determined claim 7 is unpatentable over the cited references. Nevertheless, because claim 7 must be analyzed to determine the patentability of the dependent claims, we begin by considering the parties’ arguments regarding claim 7.

Generally, Petitioner contends Stewart teaches the memory-related limitations[10] of claim 7 and relies on a combination of Posadas and Wense for the remaining limitations. Pet. 12–41. Specifically, Petitioner contends Posadas discloses two different networks wherein the first network is a CAN network and the second network is Ethernet. Petitioner contends the use of LIN or FlexRay as the second network would have been obvious to one of ordinary skill in the art, as demonstrated by the combination of Posadas with Wense. *Id.*

---

[10] By memory-related limitations, we refer generally to the limitations of claim 1 relating to memory (i.e., a storage resource): causing a determination as to whether a storage resource is available; in the event the storage resource is not available, determining whether a timeout has been reached and causing a re-request in connection with the storage resource if the timeout has not been reached; in the event the timeout has been reached, causing an error notification to be sent; and in the event the storage resource is available, causing storage of the information utilizing the storage resource. Ex. 1001, 12:21–30. Petitioner refers to these limitations as 7c–7f. Pet. App’x A.

Independent claim 7 is directed to (a) "computer-readable medium storing a computer program product for sharing information." Petitioner contends that Posadas expressly discloses the "non-transitory computer-readable medium," its method is carried out by computer code, and Posadas describes a communications architecture used in the YAIR robot, and thus expressly discloses a computer program product "for sharing information." Pet. 13 (citing Ex. 1006, 8, Abstract; Ex. 1004 ¶¶ 120–121). We agree with the contention, which Patent Owner does not address in its Response.

Regarding 7(b), "computer code for allowing receipt of information associated with a message, utilizing a first network protocol associated with a first network," Petitioner contends Posadas discloses a CAN system (the "first network protocol") that is distributed over a CAN bus (the "first network"). Pet. 13 (citing Ex. 1006, 9–10, Figs. 3, 4). We agree with the contention, which Patent Owner does not address in its Response.

Regarding 7(c), Petitioner contends Posadas describes the use of a shared memory ("storage resource"), and "causing a determination as to whether a storage resource is available" prior to writing is a well-known step in storing information, and is disclosed by Stewart. Pet. 14–15 (citing Ex. 1006, 10; Ex. 1007, 6, 7, 9); *see* Ex. 1004 ¶¶ 126–127. Specifically, Petitioner contends Stewart discloses the use of a real-time embedded system that is used in a distributed environment, that uses a shared, global memory and describes a "spin-lock" that uses a "test-and-set (TAS)" operation to determine memory availability. *Id.* at 15 (citing Ex. 1007, 6–7, 9, 11). Petitioner further contends this TAS algorithm first determines

whether memory is available before writing to it, then writes a "1" to a lock table to lock the memory for concurrent writes from other processes. *Id.*

Patent Owner contends that, although determining memory availability may have been known in the prior art, Posadas does not expressly disclose the step and Petitioner has not presented any evidence that the step was necessarily inherent with every computer storage mechanism of the time of the invention. PO Resp. 27 (citing Ex. 2006 ¶ 55). Patent Owner contends Posadas discloses a particular distributed blackboard storage system that includes an undisclosed storage medium utilizing an unknown process and does not use a "shared memory" as each computer has a partial copy of the blackboard. *Id.* at 27–28 (citing Ex. 1006, 10). According to Patent Owner, in Posadas's storage resource, rather than there being a shared memory, all the data are stored in particular silos, with each silo having its own processor performing undisclosed operations. *Id.* at 28 (citing Ex. 1006, Fig. 4).

In reply, Petitioner contends the '458 FD agreed with Petitioner that Posadas and Stewart disclose 7(c), determining whether a memory is available before writing to it is a trivial and obvious limitation, and a POSITA would have understood it to be disclosed by Posadas. Reply 7–9 (citing '458 FD, 16; Ex. 1038 ¶ 38).

We are persuaded that the evidence of record supports Petitioner's position that Posadas and Stewart disclose 7(c). In particular, Posadas employs "shared memory" (i.e., a "storage resource"), and Stewart employs a "global shared memory" (i.e., also a "storage resource)." *See* Ex. 1006, 10; Ex. 1007, 7. And, each of Posadas and Stewart describes determining

whether the memory is available before writing to it. Additionally, we note 7(c) does not recite a "shared memory"; it recites only a "storage resource."

Regarding (d), "in the event the storage resource is not available, determining whether a timeout has been reached and causing a re-request in connection with the storage resource if the timeout has not been reached," Petitioner contends Stewart discloses that a task trying to access the global variable table stored in shared memory must continually retry accessing the table, waiting a particular amount of time before each retry, referred to as a "polling time." Pet. 18–19 (citing Ex. 1007, 11). Petitioner contends Stewart further discloses that if a maximum amount of time has been reached, then the storage in memory is not performed. *Id.* (citing Ex. 1004 ¶ 138). Patent Owner contends that Posadas discloses a particular distributed blackboard storage system that does not appear to have any relationship to Stewart's shared memory and, therefore, a skilled artisan would not combine Posadas and Stewart. PO Resp. 29 (citing Pet. 18–19; Ex. 2006 ¶ 59). We agree that the combination of Posadas and Stewart discloses the recited limitations, and we discuss later Patent Owner's contentions regarding why a skilled artisan would not make the combination.

Petitioner contends Stewart discloses (e), "in the event the storage resource is available and the timeout has not been reached, causing storage of the information utilizing the storage resource" wherein Stewart discloses a global variable table which is stored in shared memory for the exchange of data. Pet. 19 (citing Ex. 1007, 11; Ex. 1004 ¶ 141). Patent Owner contends Posadas's particular distributed blackboard system does not appear to have

any relationship to Stewart's shared memory. PO Resp. 29 (citing Ex. 2006 ¶ 59). We discuss the relationship below.

We agree that the combination of Posadas and Stewart discloses the recited limitations, and we discuss later Patent Owner's contentions regarding why a skilled artisan would not make the combination.

Petitioner contends Stewart discloses (f), "in the event the timeout has been reached, causing an error notification to be sent" because Stewart discloses that a time-out error will occur if a time-out has been reached for a task that has been continually trying to access the table but has been unsuccessful and error handlers should be installed. Pet. 20 (citing Ex. 1007, 11). Petitioner refers to Stewart: "a time-out mechanism is used, so that if the lock is not gained within a pre-specified time or number of retries, then the transfer is not performed. . . . When using the time-out mechanism, error handlers should be installed to detect tasks that suffer successive time-out errors." *Id.* (citing Ex.1007, 11; Ex. 1004 ¶ 144).

In response, Patent Owner contends Stewart does not describe "sending a notification" because Stewart's reference to error handlers is insufficient: "[w]hen using the time-out mechanism, error handlers should be installed to detect tasks that suffer successive time-out errors. Discussion on handling these errors is beyond the scope of this paper." PO Resp. 30 (emphasis omitted) (citing Ex. 1007, 11). According to Patent Owner:

> The typical meaning of an "error handler" is a mechanism that forestalls errors if possible, and then recovers from errors when they occur without terminating the application. Ex. 2006 ¶ 66. "Error handler" does not necessarily or inherently include sending a notification, as required by Claim 7 of the Patent.

> In fact, Stewart states that the "discussion on handling these errors is beyond the scope of this paper," which expressly disclaims the disclosure of any particular error-handling method, and, thus, expressly excludes disclosing the sending of any notification. Petitioner does not point to any function or structure in Stewart which sends "a notification." Stewart does not disclose claim element 7f.

Id. at 30–31.

In reply, Petitioner contends Stewart discloses sending notification of an error to an error handler and error handlers have a well understood meaning in the art: they include code that is notified and executed when an error occurs. Reply 9 (citing Ex. 1038 ¶ 41). Petitioner contends Patent Owner's expert agreed that error handlers "are generally called when an error occurs." *Id.* (citing Ex. 1040, 114:7–116:10) (emphasis omitted). Petitioner observes the Board has previously rejected Patent Owner's argument in '458 FD:

> Stewart's reference to error handlers …would be understood by one of ordinary skill in the art as teaching 'sending a notification.' In particular, in order for an error handler to act regarding an error after it has occurred, we agree a notification would be sent. IPR458, 17-19; Ex. 1038 ¶ 42. In support of its holding, the Board credited the same admission from [Patent Owner's] expert – that "error handlers" are called (i.e., they receive a notification) after an error has been detected. *Id.*, 19 (citing Ex. 1039, 122:25–123:5). For these reasons, and those presented in the Petition, PO's argument should be rejected here just like it was in relation to the '457 and '458 petitions. Ex. 1038 ¶ 43.

Id. at 9–10.

We have reviewed the arguments of Petitioner and Patent Owner and we note as particularly relevant the cross-examination testimony of Patent Owner's declarant, Dr. Miller, in which Dr. Miller agreed with Petitioner that "an error handler is generally called when an error occurs." Ex. 1040, 114:7–10.

We are persuaded that the evidence of record supports Petitioner's position that Stewart's reference to error handlers, in the context of the teaching of memory management, would be understood by one of ordinary skill in the art as teaching "sending a notification." In particular, in order for an error handler to act when it is called regarding an error that has occurred, we agree a notification would be sent. *See* Ex. 1038 ¶¶ 41–43.

In view of the above, we agree that Stewart discloses the limitation 7(f) "in the event the timeout has been reached, causing an error notification to be sent."

Regarding (g), "causing the information stored to be shared by: in real-time, sharing the information utilizing at least one message format corresponding to a second network protocol associated with a second network which is different from the first network protocol," Petitioner contends Posadas describes two networks: a first network (CAN), and a second network that is one of CAN, Ethernet, DDE, RS232, "and so on." Pet. 20–24 (citing Ex. 1006, 8, Fig. 4). Petitioner contends the two networks and protocols are shown below in annotated Figure 4 of Posadas (Pet. 21):

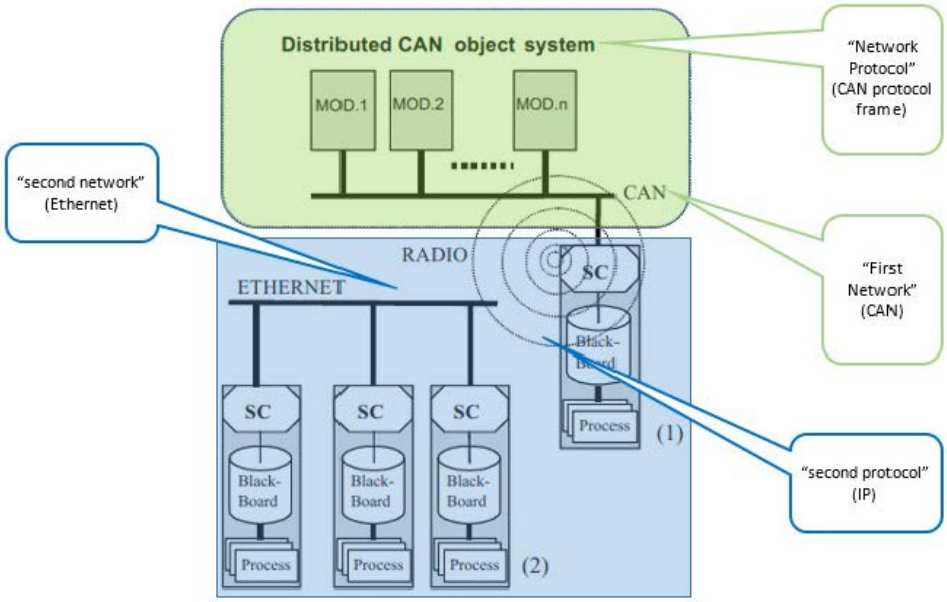

Fig. 4: Distributed blackboard structure.

Figure 4 depicts a distributed blackboard system.

Petitioner contends the ISCCAN gateway shares the information between the two networks and is shown in annotated Figure 1 of Posadas. (Pet. 27):

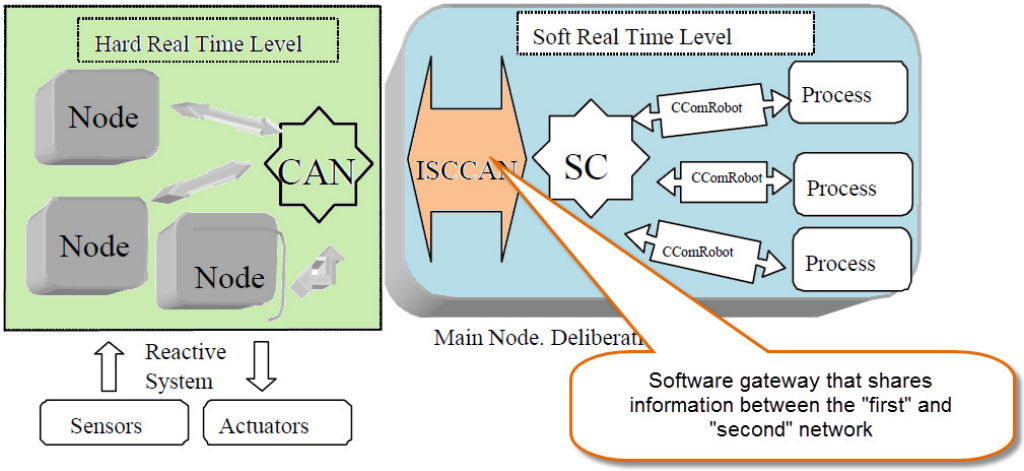

Figure 1 depicts the ISCCAN gateway that shares information between the two networks.

Regarding the sharing of information "in real-time," Petitioner contends both networks are labeled "Real Time" networks and further contends the deliberative, "soft" real-time system is able to withstand "communication overloads of 20ms introduced by the SC+ISCCAN system." *Id.* at 22–23 (citing Ex. 1006, 8–11, 13, Fig. 1; Ex 1004 ¶ 149). Petitioner contends Posadas presents test data with results well below one second and concludes that "timing analysis has been conducted showing real-time capabilities at both, low [CAN] and high level [Ethernet] domains." *Id.* at 22–23 (citing Ex. 1006, 13) (emphasis omitted). Petitioner contends Posadas's Table 1 describes response times that can be measured in milli- or microseconds and/or is less than one second. *Id.* at 24 (citing Ex. 1006, Table 1).

Patent Owner contends "sharing the information" of 7(g) refers to information that was received utilizing a first network protocol associated

with a first network (7(b)), and which was stored in the storage resource (7(c)). PO Resp. 31–32. According to Patent Owner, that information ("the information") then has to be shared "utilizing at least one message format corresponding to a second network protocol associated with a second network which is different from the first network protocol." *Id.* at 32–33.

Patent Owner contends Posadas discloses CAN information that ends with the blackboards shown in silos and there is no second network that shares the information provided by the first network because there is only one network by which information is stored and accessed in Posadas's blackboard. *Id.* at 33 (citing Pet. 18–19 (annotated Posadas Fig. 4); Ex. 2006 ¶¶71–72). Patent Owner similarly contends there is no difference in protocol between the first and second networks. *Id.*

In reply, Petitioner contends that Patent Owner incorrectly interprets Posadas, and that Patent Owner's expert disagrees with this interpretation. Reply 10–12. Petitioner contends Posadas discloses two networks, CAN and Ethernet, and Patent Owner ignores the Ethernet network shown in Posadas's Figure 4. *Id.* (citing Ex. 1006, Fig. 4; Ex. 1038 ¶¶ 44–46). According to Petitioner, referring to Figure 4 of Posadas, information flows between the CAN network and the Ethernet network and all information must flow through the SC storage shown in (1) as this is the only SC that is physically connected to the CAN network. *Id.* at 11–12 (citing annotated Fig. 4). Petitioner contends this information is then distributed over the wireless Ethernet network to processes connected to the Ethernet labeled (2). *Id.* Petitioner then contends the information from the first (CAN) network is shared in real time through SC (1) to the other SC storage (2) utilizing a

second network protocol (Ethernet). *Id.* Petitioner observes this is how Patent Owner's expert interprets Posadas, and this is the Board's determination in the '458 FD. *Id.* at 12 (citing Ex. 1039, 99:11–100:6, 95:3–8, 96:7–24; '458 FD 23, 27–28).

We agree with Petitioner that Posadas's CAN bus and Ethernet bus meet the definition of "real-time" as we have construed the term. Regarding "sharing the information," we agree with Petitioner that information from the first network (CAN) is shared with the second network (Ethernet) through storage SC (1) and SC (2), as such information "is made available to" both networks. Additionally, we note the information is delivered to each of the networks in the operation of Posadas.

We also agree with Petitioner that Patent Owner's assertion that Posadas is not an enabling disclosure is conclusory and without evidentiary support. *See id.* at 16. Further, as Petitioner observes, even a non-enabling disclosure is prior art for all it teaches for purposes of determining obviousness. *Id.* (citing *Amgen Inc. v. Hoechst Marion Roussel, Inc.*, 314 F.3d 1313, 1357 (Fed. Cir. 2003) ("[A] reference need not be enabled; it qualifies as a prior art, regardless, for whatever is disclosed therein")). We agree with Petitioner's reasoning, summarized above, that Posadas describes, inter alia, sharing information between two networks, and Posadas's Table 1 describes response times that can be measured in milli- or microseconds and/or is less than one second, and Posadas sufficiently describes real-time sharing between two networks to support an obviousness determination. *Id.* at 17. Additionally, we note Posadas's YAIR robot was built, operated, and tested. Ex. 1006, 8–13.

In view of the above, we agree the combination of Posadas and Wense discloses 7(g), and we discuss later Patent Owner's contentions regarding why a skilled artisan would not make the combination.

Regarding 7(h), "the computer program product is associated with an electronic control unit with at least one gateway function, and a plurality of interface portions," Petitioner contends Posadas defines the ISCCAN as "gateway software" and it includes interfaces that perform specific translations between CAN protocol and SC data. Pet. 24–25 (citing Ex. 1006, 11, Fig. 1; Ex. 1004 ¶ 156). We agree with the contention, which Patent Owner does not address in its Response.

Regarding 7(i) "a first interface portion for interfacing with a first network," Petitioner contends, as discussed regarding 7(b), that Posadas discloses a "first network" (CAN) and a "first interface portion" (ISCCAN software). Pet. 25–26 (citing Ex. 1006, 10, Fig. 3; Ex. 1004 ¶¶ 158–159).

Regarding 7(j) "the first interface portion including," Petitioner contends this limitation describes how network-specific messages (e.g., a CAN frame) are processed so that the data within that message can be stored in memory. Pet. 26–28 (citing Ex. 1001, Fig.7, 6:33–7:4). Petitioner contends this limitation requires that the interface include a "first portion" that receives a "first layer message" (e.g., a CAN frame) that is "related" to the first interface. *Id.* at 26. Petitioner contends the "first layer message" is processed, and a "second-layer" message (e.g., data to be stored) is provided. *Id.*

Petitioner contends Posadas discloses this limitation wherein the CAN protocol message frames (first layer message) are used to transport data from

a Communications Object (COB). *Id.* (citing Ex. 1006, 10; Ex 1004 ¶¶ 161–162). Petitioner contends this CAN frame is transmitted by the bus controller and received by the CAN network interface logic in the ISCCAN interface—the claimed "first interface-related first component[11]" (first interface-related first layer part). *Id.* at 26–27. Petitioner contends the gateway software ISCCAN performs specific translations between CAN protocol and SC data wherein the transformed format used to store the data in the blackboard are the "processed first data units" (second layer message). *Id.* Petitioner contends the portion of the ISCCAN that translates raw CAN data to the SC format is the claimed "first interface-related second component" (first interface-related second layer). *Id.* Petitioner contends the first interface limitations are shown in annotated Figure 1. *Id.* at 28.

Regarding 7(i) and 7(j), Patent Owner contends "it is unlikely that Posadas discloses the entirety of limitations 7(i), (j)," and refers to Dr. Miller's Declaration. PO Resp. 34 (citing Ex. 2006 ¶ 76). In turn, Dr. Miller asserts that he "will pass on these," providing insufficient reasoning for us to evaluate. Ex. 2006 ¶ 76. Based on Petitioner's analysis, we are persuaded that Petitioner provides sufficient reasoning to support its contention that Posadas discloses 7(i) and 7(j).

Regarding 7(k), "where the first network is at least one of a Controller Area Network, a Flexray network, or a Local Interconnect Network," Petitioner contends that, as discussed above regarding 7(b), Posadas

---

[11] Petitioner uses the term "component" whereas the claim recites "layer part."

discloses a first network that is a Controller Area Network ("the first network is at least one of a Controller Area Network, a FlexRay network, or a Local Interconnect Network"). Pet. 28–29 (citing Ex. 1006, 10, Fig. 4; Ex. 1004 ¶¶ 166–167). We agree.

Regarding 7(l), Petitioner contends Posadas discloses a second network protocol ("[E]thernet, DDE, RS232, and so on") and an interface ("second interface") described as the radio Ethernet that interfaces with the Ethernet network ("second interface portion for interfacing with the second network"). Pet. 29–31 (citing Ex. 1006, 8, 9, Figs. 2, 4; Ex. 1004 ¶¶ 166–167).

Regarding 7(m) "the second interface portion including," Petitioner contends this limitation is an analog to 7(j) "the first interface portion including," written from the perspective of the second interface (Posadas's Ethernet interface). Pet. 31–33. Petitioner contends Posadas discloses an IP frame that is communicated via an Ethernet link. *Id.* at 32 (emphasis omitted); *see* Ex. 1006, 9 (the main control node includes "a full CAN interface, and radio ethernet link that *provides external IP communication*"). Petitioner contends the distributed blackboard system ("SC") includes both "the second interface-related first part and the second interface-related second part." *Id.* at 32 (citing Ex. 1006, 10). Petitioner contends the SC receives IP frames ("first layer messages"), processes these messages to extract the data from the IP frame, and stores that data, referred to as "SC objects," in the SC, and this constitutes the "second interface-related second messages." *Id.* (citing Ex. 1004 ¶¶ 169–170); *see also* annotated Figure 4 (Pet. 33).

Patent Owner contends Petitioner is incorrect because Posadas discloses only a CAN network communicating with a storage device that includes an internal communication structure, and all communications travel via the same structures. PO Resp. 34–37 (citing Pet. 33 (annotated Posadas Fig. 4)).

In reply, as discussed *supra* regarding element 7(g), Petitioner contends Patent Owner ignores the Posadas Ethernet network shown in Figure 4. Reply 10–12 (citing Ex. 1006, Fig. 4; Ex. 1038 ¶ 45–47; Ex. 1039, 11–100.6, 95:3–8; 96:7–24). Petitioner contends the information flows between the CAN network and the Ethernet network through SC storage (1) and SC storage (2). *Id.* at 11–12. According to Patent Owner, Petitioner incorrectly points to the same interface ("Radio Ethernet") as it argued is the first interface of 7(j). *Id.* at 35.

We agree Posadas discloses 7(l) and 7(m). Similar to our discussion of 7(j), Posadas's two networks, CAN and Ethernet, communicate with the shared memory through interfaces that enable messages to be stored in memory. The first interface is the physical interface between the CAN network and memory and the second interface is the radio interface between the Ethernet network and memory.

Regarding 7(n), Petitioner contends Posadas discloses a first network ("CAN") and a "second network" that is one of Ethernet, DDE, RS232, "and so on" (i.e., Posadas discloses this limitation "where the second network is different from the first network and is at least one of the Controller Area Network, the Flexray network, or the Local Interconnect Network"). Pet. 33 (citing Ex. 1006, 8, Fig. 4). Petitioner further contends one of ordinary skill

at the time of the alleged invention would have understood that networks other than CAN, DDE, Ethernet, or RS232 could be used as the "second" network and two such networks were LIN and FlexRay. *Id.* at 34.

Petitioner contends LIN and FlexRay were well-known prior to the priority date of the '705 patent and were well-known to work in conjunction with the CAN network. *Id.* at 34–35 (citing Ex. 1004 ¶¶ 173–176). In particular, Petitioner contends Wense describes the use of LIN in the same network as CAN. *Id.* (citing Ex. 1008, 13, Fig. 3) ("LIN has been developed to serve as local subnet to networks with higher performance such as CAN and thus replace hard wiring."). *Id.* Petitioner contends Wense also discloses FlexRay as an alternative network that can be used. *Id.* at 35.

Patent Owner contends Posadas discloses only a CAN network communicating with a storage device that includes an internal communication structure wherein all communications travel via the same structures. Resp. 34–37.

We agree the combination of Posadas and Wense discloses 7(n). As discussed *supra* regarding 7(j), 7(g), 7(m), and 7(l), contrary to Patent Owner's contentions, Posadas discloses two networks (CAN and Ethernet). Patent Owner does not dispute that Wense describes the benefits of the use of LIN in combination with CAN.

Petitioner presents a rationale for one of ordinary skill in the art to have combined Posadas, Stewart, and Wense. Pet. 15–18, 35–41. For example, regarding the combination of Posadas and Wense, Petitioner contends, *inter alia*, both relate to distributed systems in a multiplex networking environment and the combination of their teachings would have

been predictable. *Id.* at 35–41 (citing Ex. 1008, 10, 11). Regarding the combination of Posadas and Stewart, Petitioner contends, *inter alia*, both are in the same field of endeavor (real-time distributed control systems) and use similar techniques to solve the same problem (i.e., a shared memory architecture to exchange information between the hybrid control modules that make up a real-time distributed system). *Id.* at 15–18 (citing Ex. 1006, 8; Ex. 1007, 6, 7, 8, 11, 12; Ex. 1004 ¶¶ 93–95, 97–104, 129–133).

Patent Owner contends there is no basis for combining Posadas and Stewart to arrive at the invention of claim 7. PO Resp. 27–29 (citing Ex. 2004 ¶¶ 30, 33). According to Patent Owner, Posadas discloses a particular distributed blackboard storage system that includes an undisclosed storage medium utilizing an unknown process, and Posadas refers to a structure, identified as "Penny, 1989," on which the blackboard is fashioned, and this cannot be found. *Id.* at 27–28 (citing Ex. 2006 ¶ 52). Patent Owner contends Posadas does not use a "shared memory" because "each computer has a partial copy of the blackboard" and, rather than being a shared memory, all the data are stored in particular silos, with each silo having its own processor performing undisclosed operations. *Id.* at 28 (citing Ex. 1006, 10, Fig. 4). According to Patent Owner, there is too much possibility that the silos shown in Posadas combining both a blackboard and a processor present unique issues to assume anything about whether some unrelated technology could be combined with such a unique Posadas environment. *Id.* at 28–29.

In reply, Petitioner contends Posadas describes use of a shared memory ("storage resource"), and that "causing a determination as to

whether a storage resource is available" prior to writing is a well-known step in storing information, and is disclosed by Stewart. Reply 7–9 (citing Ex. 1038 ¶¶ 37–39). Regarding the combination of Posadas and Stewart, Petitioner contends Stewart's memory management techniques are fundamental techniques applicable to shared memory environments and Petitioner's reasoning is thus supported by sufficient rational underpinning. *Id.* at 8–9. (citing Ex. 1038 ¶ 39).

Patent Owner contends a person of ordinary skill in the art would not have been motivated to combine Wense with Posadas because Petitioner relies on Posadas's "second network," which, according to Patent Owner is the same network as the first network, i.e., "Posadas discloses only a CAN network communicating with a storage device that includes an internal communication structure. However, all communications travel via the same structures." PO Resp. 37 (citing Ex. 1006 Figs. 3, 4; Ex. 2006 ¶ 84). Patent Owner contends, because there is no "second network" in Posadas, there is no motivation to combine Wense with Posadas as contended by Petitioner. *Id.* (citing Ex. 2006 ¶ 84).

In reply, Petitioner contends, as discussed regarding 7(g), Patent Owner's argument is based on an incorrect interpretation of Posadas, an interpretation with which its own expert disagrees. Reply 10 (citing Ex. 1038 ¶ 44). According to Petitioner, Patent Owner expressly ignores the Ethernet network shown in Posadas at Figure 4. *Id.* at 10–11 (citing Ex. 1038 ¶¶ 46–48). Specifically, Petitioner contends:

> As provided in Fig. 4, information flows between the CAN network and the Ethernet network. Ex. 1038, ¶47. Critically, all

> information must first flow through the SC storage shown in (1) – the only SC that is physically connected to the CAN network. *Id.* This information is then distributed over the wireless Ethernet network to processes connected to the Ethernet labeled (2). *Id.* Thus, "the" information from the first (CAN) network is shared, in real-time, through SC (1), to the other SC storage (2), utilizing a second network protocol (Ethernet). *Id.* Indeed, this is precisely how [Patent Owner's] expert interpreted Posadas, and how the Board likewise found in the '458 proceeding. Ex. 1039, 99: 11–100:6; 95:3-8; 96:7-24; IPR458, 23; 27-28.
>
> PO further argues that a POSITA would not have combined Posadas with Wense. R.37. But this argument is likewise premised on the same flawed interpretation that Posadas discloses only a single network, and should be rejected for the same reasons.13 Ex. 1038 ¶ 48.

Id. at 11–12.

As discussed, *supra*, we agree with Petitioner's contentions that Posadas discloses two networks (CAN and Ethernet) and describes the use of CAN network with an Ethernet network, or other networks. Patent Owner does not dispute that Wense describes the benefits of the use of LIN in combination with a CAN network.

For these reasons, we agree that Petitioner has shown that one of ordinary skill in the art would have combined the first and second networks (CAN and Ethernet) and interfaces of Posadas with known memory management techniques (as further described by Stewart). Further, Petitioner has shown sufficiently that one of ordinary skill in the art would combine the Posadas CAN network with a known second network (LIN) as described by Wense. Petitioner's reasoning is thus supported by sufficient rational underpinning. *See KSR*, 550 U.S. at 418.

In view of the above, we find Petitioner has shown, by a preponderance of the evidence, that the combination of Posadas, Stewart, and Wense teaches or suggests the limitations of claim 7 and provides sufficient reasoning for combining the references in the manner asserted.

Challenged Claims 8–19

Regarding challenged claims 8–19, which depend directly or indirectly from claim 7, Petitioner presents contentions supporting unpatentability. Pet. 47–50. Patent Owner presents opposing contentions in its Response for claims 7, 8, 10, 11, 18, and 19. PO Resp. 38–43. Petitioner addresses only claims 7, 8, 10, and 18 in its Reply.

Regarding claim 8, which recites "the storage resource includes a bulletin board," Petitioner contends the '705 patent describes a bulletin board as "any data base that enables users to send and/or read electronic messages, file, and/or other data that are of general interest and/or addressed to no particular person/process." Pet. 42 (citing Ex. 1001, 5:10–14). According to Petitioner, Posadas discloses a "distributed blackboard system (SC)" and "shared memory," both of which are bulletin board storage resources. *Id.* (citing Ex. 1006, 8, 10). More specifically, the Posadas system "makes an internal representation of the data using a distributed blackboard architecture. (Penny, 1989)." *Id.* (citing Ex. 1006, 10). According to Petitioner, this blackboard architecture is a "shared" memory. *Id.* (citing Ex. 1006, 10 ("communications between processes running in CAN nodes use shared memory")). Thus, according to Petitioner "when a process needs to know data from a sensor, it only needs to obtain the memory pointer where the information is." *Id.* (citing Ex. 1006, 10 (the blackboard system "hides

communication details behind a uniform bind-notification interface"); Ex. 1004 ¶¶ 193–194).

Patent Owner contends the claim term "bulletin board" is not the same as Posadas's distributed blackboard in which every silo has its own SC interface, processor, and only part of the entire blackboard, and, for reasons set forth regarding claim 7, a person of ordinary skill would not have been motivated to combine Posadas, Stewart, and Wense. PO Resp. 38 (citing Ex. 1001, 7:30–37, Fig. 6; Ex. 2006 ¶ 89). Patent Owner refers to the '705 patent:

> The approach uses a common, or shared storage system that is connected to all of the system networks through network interfaces. A critically important feature of the bulletin board approach is that the complexity of the bulletin board grows linearly with the number of networks (as opposed to as N(N-1) for the gateway approach), and in one-to-many situations the number of message transformations is half that of the standard networking approach.

Id. (quoting Ex. 1001, 7:30–37); *see also* Ex. 1001, Fig. 6.

Petitioner asserts the claims do not require a "common, or shared storage system that is connected to all of the system networks through network interfaces." Reply 12–13 (citing Ex. 1038 ¶ 50). Petitioner refers to the statement in the '705 patent that, like Posadas, the shared information may "be ***replicated among a plurality*** of the bulletin board[s]." *Id.* at 13 (citing Ex. 1001, 1:33-40, 6:22-32). Petitioner argues Patent Owner is improperly reading limitations into the claims, and even if such limitations were read into the claims, Patent Owner's expert admits Posadas discloses a central shared memory that distributes information from the CAN network

to other processes over the wireless Ethernet network. *Id.* (citing Ex. 1039, 99:11–100:6). Petitioner additionally asserts "this is entirely consistent with the Board's ruling in the '458 petition. 'IPR458 FD, 16 ("Petitioner contends Posadas describes the use of a shared memory ('storage resource') . . . . [w]e agree with Petitioner's analysis . . . ."). *Id.* (citing Ex. 1038 ¶ 51).

Applying the construction that a bulletin board constitutes "any data base that enables users to send and/or read electronic messages, file, and/or other data that are of general interest and/or addressed to no particular person/process," we agree that Posadas discloses the claimed bulletin board. Although Posadas's distributed blackboard system and memory may be different from a single bulletin board in which there is only one blackboard system, claim 8 recites only "the storage resource includes a bulletin board." As discussed above, the '705 patent expressly states "the information may "be replicated among a plurality of the bulletin boards." Ex. 1001, 1:33–40. Notably, the '705 patent's description of a "bulletin board" recites "and/or" in multiple places, indicating that not all of the identified characteristics are necessary to meet that description. We thus agree with Petitioner that the claim does not require a "common, or shared storage system that is connected to all of the system networks through network interfaces."

We agree with Petitioner's contentions and find that Petitioner has shown, by a preponderance of the evidence, that Posadas discloses claim 8 and, as discussed *supra* regarding claim 7, that one of ordinary skill in the art would have been motivated to combine Posadas, Stewart, and Wense.

Regarding claim 10, which recites "wherein the computer program product is operable such that at least one of the different processes process

the information in a manner that is isolated from temporal characteristics associated with at least one of a plurality of heterogeneous networks," Petitioner contends Posadas discloses this limitation. Pet. 43–44 (citing Ex. 1001, 8:64–9:2, Fig. 12). Petitioner refers to the '705 patent:

> Referring to FIG. 12, the application process (1200) utilizes the bulletin board retrieve mechanism (1101) to access all parameters, events, and real –time variables from the bulletin board. Thus the application process is decoupled from the temporal behavior of the input/output variables and can be triggered by a plurality of events (1201).

Id. at 43 (quoting Ex. 1001, 8:64–9:2).

Petitioner argues Posadas discloses the very same "isolated" (as in the claims) or "decoupled" (as in the specification) system. *Id.* at 43. According to Petitioner, Posadas describes a real-time communications system that shares information between two, heterogeneous networks. *Id.* (citing Ex. 1006, 8). The first network, referred to as the "reactive level," is described as "Hard Real-Time," and uses distributed CAN objects on a CAN bus. The second network, referred to as the "deliberative level," is described as "Soft Real-Time," and uses the IP protocol on an Ethernet Bus. *Id.* (citing Ex. 1006, 11, 13, Table 1). The two networks share information using a "blackboard" shared memory. *Id.* at 43–44. Posadas teaches that the ISCCAN and SC distribute ASCII-Hex representations of CAN binary streams for "selective processing." *Id.* Processes then "translate this information using a supplied object toolbox." *Id.* at 44 (citing Ex. 1006, 11). In the mapped mode, the ISCCAN and SC "allows the use of defined filtering by applying the SC general bind-notification scheme." *Id.* According to Petitioner, Posadas's system is "isolated from temporal

characteristics" of at least one of the networks, just as the bulletin board retrieve mechanism in the '705 patent is "decoupled from the temporal behavior" of one of the networks. *Id.* (citing Ex. 1004 ¶¶ 200–201). Petitioner contends temporal isolation is one of the primary benefits of using a blackboard system and contends Posadas describes both hard and soft real time interfaced through the ISCCAN. *Id.* According to Petitioner, without temporal isolation, the system simply would not operate. *Id.* (citing Ex. 1004 ¶¶ 202–203).

Patent Owner contends Petitioner ignores the antecedent basis of the "different processes" of claim 10, which lie in claim elements 7(j) and 7(m). PO Resp. 38–39. According to Patent Owner, the "processing" in the context of claim 10 is the processing of the "first interface-related first layer messages" and the "second interface-related first layer messages." *Id.* at 39. Patent Owner contends Petitioner refers to "processes" broadly, without a tether to the language of the claim, and has not shown that the "processing," "translat[ion]," or "defined filtering" of Posadas are in relation to any interface-related first-layer message, or for that matter "isolated from temporal characteristics associated with at least one" network. *Id.* (citing Ex. 2006 ¶ 90). Patent Owner contends for this reason and the reasons set forth regarding claim 7, the combination of Posadas, Stewart, and Wense does not disclose every element of claim 10, nor would a person of ordinary skill have been motivated to combine them to arrive at the invention of the '705 Patent. *Id.* (citing Ex. 2006 ¶ 91).

Petitioner replies that Posadas discloses a real-time communications system that shares information between two heterogeneous networks—CAN

and Ethernet—by way of shared memory. Reply 13. Regarding the process of claim 7 limitations 7(j) and 7(m), Petitioner contends these limitations are discussed, *supra*, and the Board has already found claim 7 unpatentable so the "different processes" of claim 10 are disclosed by the prior art. *Id.* (citing Ex. 1038 ¶ 53). Petitioner argues in the context of claim 10, "isolated" simply means that the processes are not based on the temporal characteristics of a network. *Id.* at 14 (citing Ex. 1038 ¶ 53). Petitioner further argues Claim 10 does not recite any antecedent basis for "a plurality of heterogeneous networks" and although Posadas's processing is clearly temporally isolated from both the CAN and Ethernet networks, according to the claim, isolation from any heterogeneous network is sufficient. *Id.* at 14–15 n.15 (citing Ex.1038 ¶ 53).

Petitioner contends Posadas's two networks—a CAN and Ethernet network—operate at different bitrates and the networks interface through an ISCCAN. *Id.* at 15 (citing Pet. 42–43; Ex. 1038 ¶ 54). Petitioner contends, because the networks operate at different rates, the system simply would not operate if they were not temporally isolated by the ISCCAN. *Id.* (citing Pet. 42–43; Ex. 1038 ¶ 54). According to Petitioner, this comports with Posadas's explanation that "'***any Windows application*** (local or remote) can access the communication system with all the necessary communications hidden (including CAN),' as they would be unable to access CAN data with necessary communications hidden if those Windows processes were not temporally isolated." *Id.* (citing Ex. 1006, 9 (emphasis in original)). Petitioner contends Posadas's bulletin board retrieval operation moves data from the blackboard through the SC to the Ethernet bus. *Id.* (citing Ex. 1038

¶ 54). The data transferred includes odometric, ultrasound, and infrared information from the blackboard that was previously sent by CAN and this data is sent at 100 or 300 millisecond periods. *Id.* (citing Ex. 1006, 11). Petitioner contends, on the CAN bus, this data is written every 8, 10, or 50 millisecond period and, because the data is sent at different periods on the two buses, they are temporally isolated. *Id.* at 15–16 (citing Ex. 1038 ¶ 54; Ex. 1006, 1).

We agree Posadas discloses the two networks, CAN and Ethernet, that operate at different bit rates in processing information shared at the bulletin board. In operation, the processes process the information employing decoupling or isolation. The "different processes" of claim 10 correspond to claim 7 limitations 7(j) and 7(m), discussed *supra*. As discussed, *supra*, the processes are expressly not based on the temporal characteristics of the two networks (CAN and Ethernet). Moreover, the claim recites "isolated from temporal characteristics associated with at least one of a plurality of heterogeneous networks" so only one network need be "isolated."

We agree with Petitioner's contentions and find that Petitioner has shown, by a preponderance of the evidence, that Posadas discloses the limitation of claim 10 and, as discussed *supra* regarding claim 7, that one of ordinary skill in the art would have been motivated to combine Posadas, Stewart, and Wense.

Regarding claim 11, which recites "the information is shared with an operating system," Petitioner contends "Stewart discloses that its system, including its state variable table mechanism is 'integrated into the Chimera II Real-time Operating system'" ("Chimera II RTOS") and, therefore,

information in Stewart is shared "with an operating system." Pet. 44–45 (citing Ex. 1007, Abstract, 7).

Petitioner contends real-time operating systems such as Chimera II were well-known in the art at the time of the '705 invention, and one of ordinary skill in the art would have realized the advantages to adapting Stewart's operating system to Posadas, such as its predictability. *Id.* at 45 (citing Ex. 1004 ¶¶ 206–208). According to Petitioner, Posadas discloses sharing information with the Windows NT operating system. *Id.* (citing Ex. 1006, 8, 9 ("The SC software enables the main robot controller (Windows NT based) to communicate transparently through different channels: CAN, Ethernet, DDE, RS232, and so on.") (emphasis omitted)). Petitioner contends it would have been a simple and obvious design choice to use the Chimera real-time operating system in place of Windows NT and the Chimera RTOS was designed specifically for use with reconfigurable sensor-based control systems for robotics, a system with which Dr. Koopman has personal experience. *Id.* (citing Ex. 1004 ¶ 208). Petitioner contends it would have been an obvious design choice to use a real-time operating system such as the Chimera II RTOS that was designed specifically for robotics in a robot such as Posadas's. *Id.* Petitioner further contends one of ordinary skill in the art would have had a reasonable expectation of success of such a modification; the functioning, implementation, and advantages of real time operating systems were all well known at the time of the '705 patent; and one of ordinary skill would have found that modifying Posadas would have been a simple matter. *Id.* (citing Ex. 1004 ¶ 209).

Patent Owner argues "Petitioner's argument–that one of ordinary skill would have seen the substitution of the Chimera II real-time operating system for Windows NT as a 'simple and obvious design choice'–overlooks the fact that Stewart's Chimera II operating system was confined to a single bus." PO Resp. 40 (citing Ex. 1007, 10). Patent Owner contends adaptation of a real-time operating system to a multiple-bus apparatus would have required undue experimentation and would not, contrary to Petitioner's assertion, have been an obvious design choice. *Id.* (citing Ex. 2006 ¶ 92).

Patent Owner contends "Petitioner appears to conflate *requiring an operating system* to operate with *sharing information with an operating system*." *Id.* at 40–41 (citing Pet. 45). According to Patent Owner, "[n]othing about the 'main robot controller' communicating through 'different channels' discloses sharing of information with the Windows NT operating system itself. *Id.* at 41 (emphasis omitted). Patent Owner contends Petitioner "appears to assume that the mere presence of an operating system is sufficient to demonstrate sharing of information with it, but this cannot be true–information can certainly pass from Posadas' CAN network through the storage's Ethernet network without the information being 'shared' with the operating system." *Id.* at 41. Patent Owner contends Petitioner has not pointed to anything in Posadas that discloses sharing of information with the Windows NT operating system, and Petitioner's argument for disclosure of such sharing by Stewart's operating system fails. *Id.* (citing Ex. 2006 ¶ 93).

Patent Owner contends for these reasons and the reasons set forth regarding claim 7, the combination of Posadas, Stewart, and Wense does not

disclose every element of claim 11, nor would a person of ordinary skill have been motivated to combine them to arrive at the invention of the ’705 patent. *Id.* (citing Ex. 2006 ¶ 94).

Petitioner replies, regarding the combination, that its previous contentions and Board decision apply here. Reply. 16–17 (citing Ex. 1038 ¶ 55; ’458 FD, 29–30). In the current proceeding, Petitioner contends Patent Owner’s expert provides no opinion beyond conclusory remarks. *Id.* (citing PO Resp. 40–41; Ex. 2006 ¶¶ 92–93; Ex. 1038 ¶ 57). Petitioner contends, in contrast, “[a]s explained in detail in the Petition and in Dr. Koopman’s declarations, such a substitution would have been trivial, and would have required no more than ordinary skill.” *Id.* at 17 (citing Ex. 1004 ¶¶ 208–209; Ex. 1038 ¶ 58). According to Petitioner, “the notion that Stewart is somehow incompatible with Posadas because it uses a single bus is incorrect--a POSITA would expect any real-time operating system to be capable of handling multiple buses.” *Id.*

Petitioner argues Patent Owner’s contention that Posadas does not “share” information with the Windows NT operating system itself is also incorrect. *Id.* (citing PO Resp. 41; Ex. 1038 ¶ 59). According to Petitioner, Patent Owner’s expert testified “[b]y the development of the SC system, the Windows NT processes have access to the high-level distributed data.” *Id.* at 17 (citing Ex. 1039, 104:19–105:6; Pet. 45 (citing Ex. 1006, 9); Ex. 1038 ¶ 59).

We agree the information in Stewart is “integrated into the Chimera II Real-time Operating system” and the information is shared with the operating system. Regarding the combination, as discussed, *supra*, we

determine Petitioner provides sufficient evidence why one of ordinary skill in the art would combine Stewart and Posadas. Moreover, regarding claim 11, we credit the testimony of Dr. Koopman over that of Dr. Miller on this point because Dr. Koopman provides more detailed, compelling reasoning that articulates and supports the underlying basis for his statements.

We agree with Petitioner's contentions and find that Petitioner has shown, by a preponderance of the evidence, that Posadas discloses the limitation of claim 11 and, as discussed *supra* regarding claim 7, that one of ordinary skill in the art would have been motivated to combine Posadas, Stewart, and Wense.

Regarding claim 18, which recites "wherein the computer program product is operable such that multiple modes of operation are enabled, wherein at least one of the modes includes a diagnostic mode," Petitioner contends Posadas discloses this limitation. Pet. 49–50. According to Petitioner, "[t]he '705 patent provides little guidance on what the claimed 'mode' is or how it is implemented, stating only that '[t]he emergency or debug mode lets the network run in a fail-safe reduced operation mode or in a diagnostic mode **that allows inspection of the system**.'" *Id.* at 49 (citing Ex. 1001, 11:59–62 (emphasis in original)). Petitioner contends Figure 2 of Posadas expressly discloses a "diagnostic socket" and a diagnostic mode that allows inspection of the system. *Id.* at 49 (citing Ex. 1006, 9, Fig. 2). *See* annotated Figure 2 below:

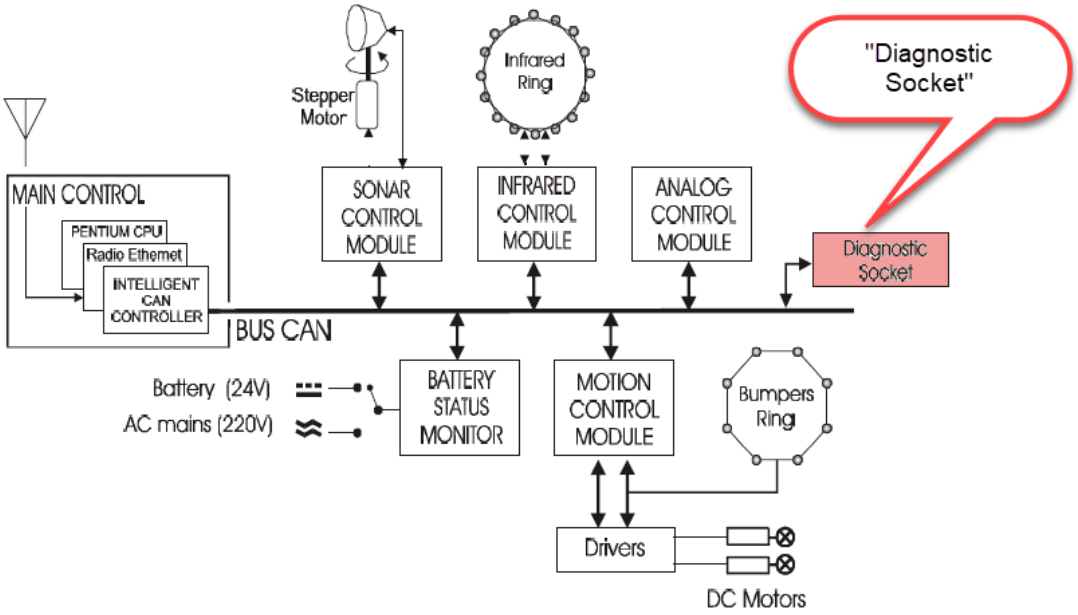

Fig. 2: YAIR architecture

The above Figure 2 of Posadas highlights the "Diagnostic Socket."

Petitioner further contends Posadas expressly discloses the use of a diagnostic mode while the system is running. *Id.* at 50. According to Petitioner, as discussed in the section labeled "Testing Prototype," Posadas's system includes a module, REC, "[t]o validate the communication system." *Id.* Petitioner contends the REC module "was specifically designed to evaluate[] system performance, and was used to diagnose the source of a robot performance limitation observed during testing: "The REC test bed has been designed to stress the communication system in order to evaluate its performance…. We obtained good communications performance running REC tasks with the following periodicity…. These control periods are slow

and force the robot to move slowly during the test." *Id.* (citing Ex. 1006, 11; Ex. 1004 ¶¶ 229–230).

Patent Owner contends "diagnostic mode" should be understood as "an alternate mode of operation, distinct from normal operations, that still allows inspection of the system while it is running." PO Resp. 42. Patent Owner contends because the Diagnostic Socket is evidently a hardwired connection on the CAN bus, the described REC module, which communicates with the system via wireless network, does not use it. *Id.* According to Patent Owner, by itself, the presence of a Diagnostic Socket does not dictate the presence of a "Diagnostic Mode" and no additional diagnostic or "debugging" mode of operation is expressly disclosed by Posadas. *Id.* (citing Ex. 2006 ¶ 96).

According to Patent Owner, Petitioner overlooks the extensive description of alternative operating modes in the specification and the purpose of these modes is to "provide for a guaranteed deterministic behavior of the system." *Id.* at 42–43 (citing Ex. 1001, 11:52–53). Patent Owner contends "[a]t most, Posadas' REC module was a temporary implementation directed to testing a portion of the communication system in prototype form, not 'an alternate mode of operation.'" *Id.* at 43 (citing Ex. 1006, 11 ("Testing Prototype")). Patent Owner contends the "REC module does not disclose a regular component of the system which provides an alternative mode of operation for diagnostic purposes; for that matter, the REC module does not clearly disclose a second mode of operation at all, as required by Claim 18." *Id.* (citing Ex. 2006 ¶ 97).

Patent Owner contends for these reasons and the reasons set forth above regarding claim 7, the combination of Posadas, Stewart, and Wense does not disclose every element of claim 18, nor would a person of ordinary skill have been motivated to combine them to arrive at the invention of the '705 patent. *Id.* at 43 (citing Ex. 2006 ¶ 98).

In reply, Petitioner contends Patent Owner's claim construction is incorrect, but even applying this claim construction, Posadas still teaches the "diagnostic mode." Reply 17–19. According to Petitioner, assuming Patent Owner's construction, Posadas's REC module's purpose is "to stress the system to evaluate its performance," in other words, "an alternate mode of operation, distinct from normal operations, that still allows inspection of the system while it is running." *Id.* at 18. Petitioner contends a performance cannot be evaluated without inspecting the system while it is running, and, inclusion of a "diagnostic socket," which is a hardware attachment to Posadas's circuit, would indicate permanency to a POSITA. *Id.* at 18–19 (citing Ex. 1038 ¶ 64).

As noted *supra*, we have considered the claim construction of the term "diagnostic mode" proposed by Patent Owner and Petitioner and we construe "diagnostic mode" as a mode, distinct from normal operation, that allows inspection of the system while it is running.

In our analysis, we note the Specification of the '705 patent states the following as an enhancement that addresses shortcomings of traditional computer networks:

> The concept that an embedded communication and computing network can run in multiple modes in order to provide for a

> guaranteed deterministic behavior of the system. This property can be achieved by only allowing change to the configuration and/or the functions (SW code) in a secured configuration and upgrade mode. *If the network is booted in the normal operating mode*, all processors execute the existing code and only allow data sharing through the bulletin boards. *The emergency or debug mode lets the network run* in a fail-safe reduced operation mode or *in a diagnostic mode that allows inspection of the system, while it is running*. For each operating mode, the gateway can store a processing image on the bulletin board. The advantage of this procedure is that only the communication hubs need to deal with secure data transfer and encryption while the peripheral nodes in the network can be relative[ly] simple in design.

Id. at 11:51–67 (emphases added).

Within the context of claim 18, which recites that "multiple modes of operation are enabled," and the Specification's description of different modes as distinct from "the normal operating mode," it would be unreasonable to adopt a construction in which a "normal operating mode" that has diagnostic capability falls within the scope of the recited "diagnostic mode."

Applying this claim construction, we agree Posadas's Diagnostic Socket is used with the REC module as a distinct diagnostic mode, while the system is running.

In view of the above, we find that Petitioner has shown, by a preponderance of the evidence, that the combination of Posadas, Stewart, and Wense discloses the limitations of claim 18 and, as discussed *supra* regarding claim 7, that one of ordinary skill in the art would have been motivated to combine these references as contended by Petitioner.

Remaining claims 9, 12–17, and 19

Remaining claims 9, 12–17, and 19 depend directly or indirectly from claim 7. Petitioner sets forth contentions and evidence to support the unpatentability of these claims. Pet. 42-43, 46–48, 51. Except for claim 19, Patent Owner does not directly address these claims and/or relies on the contentions presented for independent claim 7, discussed *supra*.

Claim 9 recites "wherein the computer program product is operable such that the first interface-related second layer part carries out the processing of the first interface-related first layer messages." Petitioner contends, for the same reasons discussed regarding limitations 7(i) and 7(j), Posadas discloses that the "first interface-related second layer part" processes the "first interface-related first layer message." Pet. 42–44 (citing Ex. 1004 ¶ 197).

Claim 12 recites "wherein the computer program product is operable such that objects are generated based on a change of state of the information stored on the storage resource" and claim 13, which depends from claim 12, recites "wherein the objects include at least one of flags, events, signals, and interrupts." Petitioner contends Posadas's system is "event driven" and the system may be used so that objects are generated based on a change in the "blackboard" (e.g., Posadas's "storage resource"). Pet. 46. According to Petitioner, using Posadas's system, "it is possible to associate the execution of code with specific events (for instance an event could be a change on the blackboard)" and "[t]hus, the processes, which are bound with SC objects, automatically receive the values [they] need from blackboard objects." *Id.* (citing Ex. 2006, 11; Ex. 1004 ¶ 212) (emphasis omitted). Petitioner

contends Posadas's system associates the execution of code with specific events (for instance an event could be a change on the blackboard. *Id.* (citing Ex.1006, 11; Ex. 1004 ¶ 215).

Claim 14 recites "wherein the computer program product is operable such that the real-time involves a response time that is measured in milliseconds," claim 15 recites "such that the real-time involves a response time that is measured in microseconds," and claim 16 recites "such that the real-time involves a response time that is less than 1 second."

Petitioner contends, as discussed *supra* regarding limitation 7(g), Posadas discloses a response time that is below 1 second. Pet. 46–47. According to Petitioner, Posadas also discloses response times between 1.096 and 7.096 milliseconds, which corresponds to 1096 and 7096 microseconds. *Id.* at 47 (citing Ex. 1006, Table 1). Petitioner contends one of ordinary skill in the art would readily understand that Posadas discloses a response time of between 1096 and 7096 microseconds, with actual message transmission lengths being as short as 135 microseconds, and it is well-known that CAN supports microsecond-level response time. *Id.* at 47 (citing Ex. 1004 ¶ 221).

Claim 17 recites "wherein the computer program product is part of an apparatus including a plurality of layers including at least two of an application layer, a middleware layer, a real-time operating system layer, a device driver layer, and a hardware abstraction layer."

Petitioner contends this limitation is disclosed by the combination of Stewart and Posadas. Pet. 48. According to Petitioner, as discussed regarding claim 11 *supra*, Stewart discloses the use of the RTOS (real-time

operating system) and Posadas discloses a middleware layer—the Blackboard System (SC) itself is such a middleware system. *Id.* (citing Ex. 1006, 10–11; Ex. 1004 ¶ 224). Petitioner contends Posadas discloses an application layer. *Id.* (citing Ex. 1006, 8 ("The coupling between these two models is possible using an ***application interface***.") (emphasis in original)); *see also* Ex. 1006, 13 ("A local version of the reactive control application described above is running in the main processor."). According to Petitioner, Posadas also discloses the use of a hardware abstraction layer as it is well-known that Windows NT uses such a layer, and the express disclosure of Windows NT thus also discloses the use of a hardware abstraction layer. *Id.* Petitioner contends the combination of Posadas and Stewart more than meets this claim's requirement of "at least two of" the recited layers. *Id.*

Claim 19 recites "wherein the computer program product is operable such that at least a portion of the message is processed at each of a plurality of layers."

Petitioner contends Posadas discloses this limitation, referring to the discussion *supra* regarding claim 7 limitations 7(j) and 7(m). Pet. 51. According to Petitioner, the first interface portion includes a first interface-related second layer part that processes the first interface-related first layer message and the second interface portion includes a second interface-related second layer part, which processes the second interface-related first layer message. Pet. 51 (citing Ex. 1004 ¶ 233). Petitioner then contends, for the same reasons discussed in connection with limitations 7(j) and 7(m),

Posadas discloses that at least a "portion of the message" is "processed" at a "plurality of layers." *Id.*

In view of the above, we are persuaded by Petitioner's contentions regarding remaining claims 9, 12–17, and 19 and we find that Petitioner has shown, by a preponderance of the evidence, that the combination of Posadas, Stewart, and Wense discloses the limitations of these claims. Additionally, other than claim 19, we note Patent Owner has not expressly addressed these contentions in its Patent Owner Response and, regarding claim 19, Patent Owner's contentions are based on claim elements and contentions considered *supra* in claim 7. PO Resp. 43–44 (citing Ex. 2006 ¶ 99).

Having considered the *Graham* factors, we conclude that Petitioner demonstrates, by a preponderance of the evidence that claims 8–19 are unpatentable under 35 U.S.C § 103(a) over Posadas, Stewart, and Wense.

E. Obviousness over Miesterfeld, Stewart, and Wense Claims 8–19

Petitioner contends that claims 8–19 are unpatentable under 35 U.S.C. § 103(a) as obvious over Miesterfeld, Stewart, and Wense. Pet. 9–10, 51–86. Relying on the testimony of Dr. Koopman, Petitioner explains how Miesterfeld (instead of Posadas) and the combination with Stewart and Wense allegedly teaches all the claim limitations and contends a person having ordinary skill in the art would have combined the teachings of the references. *Id.* (citing Ex. 1004).

1. *Miesterfeld*

Miesterfeld discloses a system that shares information between a vehicle data bus ("VDB bus") and an intelligent transportation data bus ("ITS bus") using a shared memory to which both the VDB bus and ITS bus have access, and can be used to exchange data. Ex. 1009, Abstract, Fig. 1. ITS may include a number of different data buses, one of which is disclosed as "IDB." *Id.* at 9:55–58, Fig. 1.

2. Analysis

Petitioner asserts that the combination of Miesterfeld, Stewart, and Wense teaches all of the limitations of independent claim 7.

Claims 8–19 depend from independent claim 7, which is a challenged claim in the '458 IPR, and not directly challenged in the current Petition. The references for each ground in the current Petition are the same as set forth in the petition filed in the '458 IPR. The same Declarant (Prof. Koopman) is utilized to support Petitioner's contentions. Ex. 1004.

In a Final Decision in the '458 IPR ('458 FD), we determined claim 7 is unpatentable over the cited references. Nevertheless, because claim 7 must be analyzed to determine the patentability of the dependent claims, we begin by considering the parties' arguments regarding claim 7.

Generally, Petitioner contends Stewart teaches the memory-related limitations of claim 7 and relies on a combination of Miesterfeld and Wense for the remaining limitations. *Id.* Specifically, Petitioner contends Miesterfeld discloses two different networks wherein the first network is a CAN network and the second network is a J1850 or other network.

Petitioner further contends the use of LIN or FlexRay as the second network would have been obvious to one of ordinary skill in the art, as demonstrated by the combination of Miesterfeld with Wense. *Id.* Patent Owner contends a person of ordinary skill in the art would not have been motivated to combine Miesterfeld and Stewart and, even if such combination were made, it would not include the required CAN network as Miesterfeld does not disclose a CAN network. PO Resp. 44–62.

Petitioner's assertions regarding the individual limitations of claim 7, and Patent Owner's contentions, can be summarized[12] as follows.

Independent claim 7 is directed to 7(a), "computer-readable medium storing a computer program for sharing information." Petitioner contends, to the extent the preamble is a limitation, it is disclosed by Miesterfeld, which describes the computer readable medium and that its method is carried out by computer code. Pet. 52 (citing Ex. 1009, 2:56–57, 2:61-62, Figs. 4, 6; Ex. 1004 ¶ 238). We agree with the contention, which Patent Owner does not address in its Response.

Regarding 7(b), "computer code for allowing receipt of information associated with a message, utilizing a first network protocol associated with a first network," Petitioner contends Miesterfeld discloses an "ITS data bus interface" that "enables data exchange between memory 30 and ITS data bus 24" and interconnected "ancillary devices" that "exchange data via the ITS data bus." Pet. 52–53 (citing Ex. 1009, 3:23–25, 3:41–42, 3:56–57).

---

[12] We discuss the contentions regarding the motivation to combine after we discuss the individual claim limitations.

Petitioner contends the ITS data bus and the devices interconnected to it are the "first network." *Id.* Petitioner also contends Miesterfeld discloses a "first network protocol" associated with the first network: either "D^2B, USB, IDB, Firewall [sic: Firewire], and the like." *Id.* (citing Ex. 1009, 9:55–57, Fig. 1; Ex. 1004 ¶¶ 84–87, 240). We agree Miesterfeld discloses 7(b), which Patent Owner does not address in its Response.

Regarding 7(c), "causing a determination as to whether a storage resource is available," Petitioner contends Miesterfeld discloses this limitation. Pet. 53–54. Petitioner contends Miesterfeld discloses that, before it reads or writes to the shared memory (SPI RAM), the ITS data bus first determines whether the shared memory is available. *Id.* at 53. Petitioner contends this is done by checking whether the SPI RAM Access Denied (SRAD) signal line is high—and that means the SPI RAM is unavailable. *Id.* (citing Ex. 1009, 6:33–40; Ex. 1004 ¶¶ 242–243). We agree Miesterfeld discloses 7(c), which Patent Owner does not address in its Response.

Regarding 7(d), "in the event the storage resource is not available, determining whether a timeout has been reached and causing a re-request in connection with the storage resource if the timeout has not been reached," and 7(f), "in the event the timeout has been reached, causing an error notification to be sent," Petitioner contends Miesterfeld discloses determining a timeout and, as discussed, *supra*, regarding the previous ground, Stewart teaches these memory-related limitations. Pet. 54–56 (citing Ex. 1007, 11; Ex. 1009, 6:46–50) ("a time-out mechanism is used, so that if the lock is not gained within a pre-specified time or number of retries,

then the transfer is not performed. . . .When using the time-out mechanism, error handlers should be installed to detect tasks that suffer successive time-out errors.”)); *see also* Pet. 18–20. Patent Owner repeats its argument that Stewart does not send a notification as discussed in the challenge over Posadas, Stewart, and Wense, discussed *supra*. PO Resp. 48–50.

We agree with Petitioner that Miesterfeld discloses determining a timeout. *See* Pet. 54 (citing Ex. 1009, 6:46–50). Further, for the reasons discussed *supra* with respect to the previous ground, we agree with Petitioner that Stewart teaches the remainder of the memory-related limitations. *See* Pet. 15–20 (citing Ex. 1007, 6, 7, 9); *see also* n.10, *supra*. We agree the combination of Miesterfeld and Stewart discloses 7(d).

Regarding 7(e), “in the event the storage resource is available, and the timeout has not been reached, causing storage of the information utilizing the storage resource,” Petitioner contends Miesterfeld discloses storing the information using the shared memory if the memory is available wherein once the SPI RAM (the storage resource) becomes available, the ITS data bus sets the SPI RAM Access Required (“SRAA”) signal. Pet. 59 (citing Ex. 1009, 6:33–54, Fig. 4; Ex. 1004 ¶¶ 242–243). We agree Miesterfeld discloses 7(e).

Regarding 7(g) “causing the information to be shared by: in real-time, sharing the information utilizing at least one message format corresponding to a second network protocol associated with a second network which is different from the first network protocol,” Petitioner contends Miesterfeld discloses sharing data written by the ITS data bus to shared memory using a VDB message format and the VDB message format is the “message format

corresponding to a second network protocol." Pet. 59–61. Petitioner contends the VDB data bus and its interconnected devices are the claimed "second network which is different from the first network" (ITS). *Id.* Petitioner contends the two networks, and network protocols, are shown in annotated Fig. 1. *Id.* at 60 (citing Ex. 1009, Fig. 1).

Petitioner contends Miesterfeld discloses that the information is shared in real-time because the sharing operations take place within microseconds. *Id.* at 61 (citing Ex. 1009, 6:43–62, 8:51–56).

Patent Owner contends nothing in Miesterfeld states that VDB and ITS are different protocols and, even if they are different protocols, there is no description of conversion between two protocols. PO Resp. 51 (citing Ex. 2006 ¶¶ 111, 114).

In reply, Petitioner contends Miesterfeld discloses two different networks and two protocols and refers to the Board's determination that "Miesterfeld discloses two different networks wherein the first network is a CAN network [ITS /IDB] and the second network is a J1850 or other network [VDB]." Reply 21 (citing '458 FD, 39–40). According to Petitioner, the Board agreed that Miesterfeld discloses two protocols and the "VDB message format is the 'message format corresponding to a second network protocol.'" *Id.* (citing '458 FD, 40, 42, 48–49; Ex. 1038 ¶ 72). Regarding conversion, Petitioner refers to Dr. Koopman's declaration which describes "the ITS bus converts data from ITS, stores it in shared memory, and then the VDB interface checks for stored data and shares it by preparing a VDB message on the VDB bus—i.e., it retrieves ITS data and formats it into a VDB message. *Id*. (citing Ex. 1009, 4:34-37, 7:29-31).

We agree Miesterfeld discloses 7(g).

Regarding 7(h), "the computer program product is associated with an electronic control unit with at least one gateway function, and a plurality of interface portions," Petitioner contends the '705 patent specification explains that an ECU (electronic control unit) is connected to each network of the system through multiplex bus-systems corresponding to each network, and a gateway links the multiplexing buses from each network together. Pet. 61–63. Petitioner contends the '705 patent specification also teaches that the ECU can act as the gateway. *Id.* at 61.

Petitioner contends Miesterfeld discloses a gateway which includes a VDB interface interfacing with a VDB bus, an ITS data bus interface interfacing with an ITS data bus, and a gateway function that uses shared memory to exchange data between the two data buses. *Id.* at 61–62 (citing Ex. 1009, 2:1–3:25, 3:50–57, Figs. 1, 2; Ex. 1004 ¶¶ 268–269). Petitioner contends the electronic control unit /gateway, with its constituent elements, is shown below in Figure 2 of Miesterfeld, as annotated by Petitioner. Pet. 62.

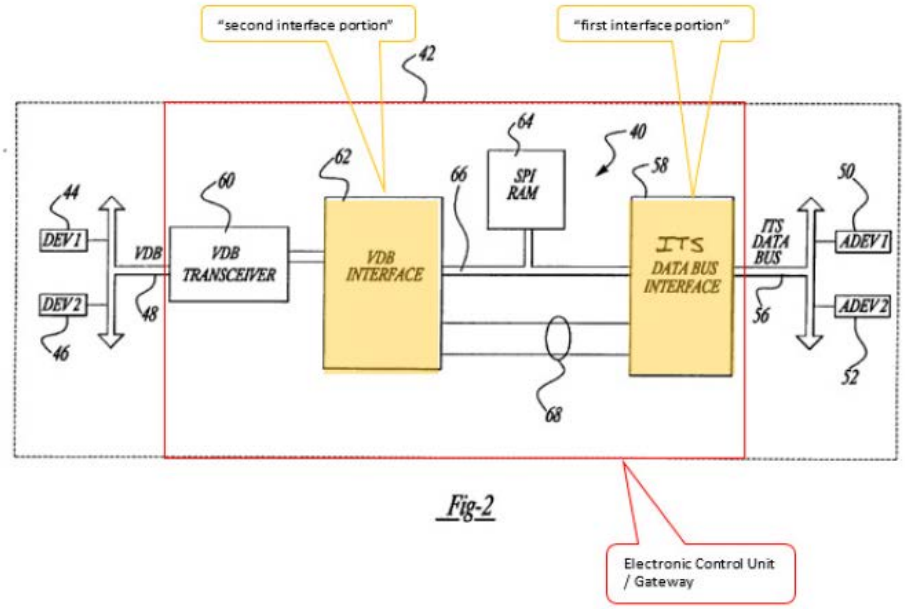

Fig-2

Figure 2 depicts a block diagram of a gateway system.

Petitioner contends the "gateway" (the claimed "electronic control unit") includes "at least one gateway function," as required by claim 7, because the "[d]ata exchange between VDB 48 and ancillary or ITS data bus 56 occurs through gateway 40." *Id.* at 62–63 (citing Ex. 1009, 3:41–49, 3:59–60).

We agree Miesterfeld discloses 7(h), which Patent Owner does not address.

Regarding 7(i), "a first interface portion for interfacing with the first network," Petitioner contends Miesterfeld discloses an ITS data bus interface (first interface portion) that interfaces with an ITS data bus and its interconnected devices (first network). Pet. 63–65 (citing Ex. 1009, 3:23–25, 3:59–4:6, Fig. 1). Petitioner contends the ITS data bus interface and ITS network are shown in annotated Figure 1. Pet. 64.

Regarding 7(j), "the first interface including . . . ," Petitioner contends Miesterfeld discloses that information to be stored in memory is first formatted into ITS data that is received by the ITS data bus interface. Pet. 64–65 (citing Ex. 1009, 3:23–25, 3:54–58). Petitioner contends this ITS data is the "first interface-related first layer message" and once received, the ITS data bus interface (the claimed "first interface-related first layer part") processes the information for storage into memory and this is the "first interface-related second layer message" ("the first interface portion including a first interface-related first layer part for receiving first interface-related first layer messages and a first interface-related second layer part, the first interface-related first layer messages being processed after which first interface-related second layer messages are provided"). *Id.* at 65 (citing Ex. 1009, 7:29–31). Petitioner contends the first interface limitations are shown in annotated Figure 1 of Miesterfeld. Pet. 65.

In response, Patent Owner states "[i]t is unlikely that Miesterfeld discloses the entirety of limitations 7i, j," but provides no reasoning, and cites no evidence, to support this assertion. PO Resp. 52.

Because Petitioner adequately identifies the recited features, and Patent Owner provides no meaningful counterargument, we agree that Petitioner makes a sufficient showing that Miesterfeld discloses 7(i) and 7(j).

Regarding 7(k), "where the first network is at least one of a Controller Area Network, a Flexray Network, or a Local Interconnect network," Petitioner contends Miesterfeld discloses an "IDB" bus as an example of a specific ITS data bus and, by definition, IDB runs on CAN. Pet. 66 (citing Ex. 1009, 9:55–58; Ex. 1004 ¶¶ 84–88, 254–255, 278–279). Petitioner

contends the IDB bus disclosed as an ITS data bus in Miesterfeld is a CAN network (i.e., Miesterfeld discloses the limitation "the first network is at least one of a Controller Area Network, a Flexray network, or a Local Interconnect Network"). *Id.*

Patent Owner contends the IDB bus disclosed in Miesterfeld is not a CAN bus because IDB meant and continues to mean Standard J2355_199710, published October 1, 1997, and was the only IDB standard when Miesterfeld was published. PO Resp. 53. Patent Owner contends this standard is not even compatible with CAN and therefore there is no possibility that the IDB disclosure can be changed to include CAN. *Id.* According to Patent Owner, a skilled artisan would not understand that Miesterfeld was referring to IDB-C, which is very different from IDB, and wasn't published until November 27, 2001, long after Miesterfeld was published. *Id.* at 53–54 (citing Ex. 2006 ¶ 120). Patent Owner contends, given that Miesterfeld does not disclose a CAN network, it is unnecessary to consider Petitioner's citation to Wense. *Id.* at 54 (citing Ex. 2006 ¶ 121).

In reply, Petitioner refers to '458 FD and contends the Board agreed that "Miesterfeld discloses two different networks wherein the first network is a CAN network [ITS /IDB] and the second network is a J1850 or other network [VDB], . . . Miesterfeld discloses two protocols, . . . [a]nd, . . . the 'VDB message format is the 'message format corresponding to a second network protocol.'" Reply 21 (citing '458 FD, 39, 40, 42, 48–49; Ex. 1038 ¶ 72).

Regarding Miesterfeld's teaching of CAN network, Petitioner contends "[t]hese exact arguments have already been decided against Patent

Owner" and refers to '458 FD. Reply 22–23. Specifically, referring to Dr. Koopman's declaration, Petitioner contends:

> J2355 expressly teaches the use of CAN as it describes implementing the ITS data bus using "[e]xisting specifications such as the emerging SAE CAN Task Force specification . . . may fit ITS requirements and will be considered during the standards development process." Moreover, J2355 refers to the forthcoming IDB-C specification (J2366) stating that "[e]volutionary changes to these [J2355] requirements, the technical details of implementation, and performance specifications will be dealt with in SAE J2366 and related documents (emphasis added)."

Id. (citing Ex. 1038 ¶ 75).

We are persuaded that one of ordinary skill in the art would understand Miesterfeld's IDB bus is a CAN bus. We credit Dr. Koopman's declaration as being more persuasive than Dr. Miller's for this issue. Ex. 1038 ¶¶ 70–75; Ex. 2006 ¶¶ 118–120). Moreover, Patent Owner incorrectly focuses on the date Miesterfeld was published, rather than all the information that was available to one of ordinary skill in the art on the date of the invention.

We have considered the contentions of Petitioner and Patent Owner, and we find that Petitioner presents persuasive evidence that, at the time of the invention, one of ordinary skill in the art would have understood that the Miesterfeld IDB bus is a CAN bus. We agree Miesterfeld discloses 7(k).

Regarding 7(l) "a second interface portion for interfacing with the second network," Petitioner contends Miesterfeld discloses a VDB interface (second interface portion) that interfaces with a VDB data bus and its interconnected devices (second network) ("a second interface portion for

interfacing with the second network"). Pet. 66–68 (citing Ex. 1009, 3:20–22, Fig. 1; Ex. 1004 ¶¶ 281–282). Petitioner contends Miesterfeld illustrates the VDB interface and VDB network in Figure 1 of Miesterfeld below, as annotated by Petitioner. Pet. 66.

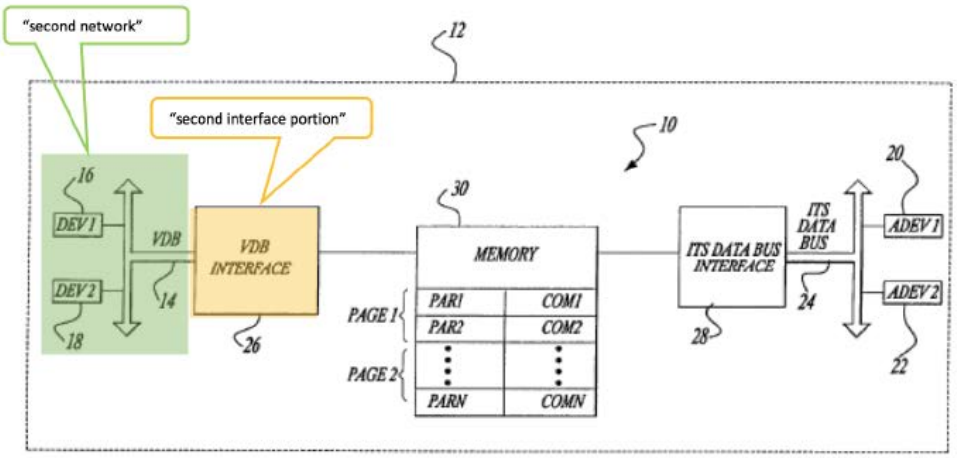

Fig-1

Figure 1 depicts a block diagram of a gateway system.

Regarding 7(m) "the second interface portion including," Petitioner contends this limitation is an analog to the first interface portion (7(j)), discussed *supra*, and contends Miesterfeld discloses that information to be stored in memory is first formatted into VDB data that is received by the VDB interface. Pet. 67 (citing Ex. 1009, 3:20–23). Petitioner contends this VDB data is the "first interface-related first layer message" and once received, the VDB interface (the claimed "second interface-related first part") processes the information for storage into memory. *Id.* (citing Ex. 1009, 4:11–18; Ex. 1004 ¶¶ 285–286).

Petitioner contends the second interface limitations are shown in

annotated Figure 1. Pet. 68.

We agree with Petitioner that the cited portions of Miesterfeld disclose 7(m).

Regarding 7(n), "the second network is different from the first network and at least one of the Controller Area Network, the Flexray network, or the Local Interconnect Network," Petitioner contends Miesterfeld discloses a first network (CAN) and a second network for a VDB data bus and its interconnected devices, which Miesterfeld specifies is a J1850 network ("second network"). Pet. 68–69 (citing Ex. 1009, 4:6–10). Petitioner contends these two networks are shown in Figure 1 of Miesterfeld. Pet. 69.

Petitioner contends Miesterfeld discloses, as discussed *supra* regarding 7(g), that the second network is a J1850 network "or any other industry standard as may be required." *Id.* at 69 (citing Ex. 1009, 4:6–10). Moreover, Petitioner contends Miesterfeld expressly directs one of ordinary skill in the art that other networks beyond J1850 may be used and one obvious replacement for a J1850 network was the Local Interconnect Network, or "LIN." *Id.* (citing Ex. 1009, 9:60–63; Ex. 1004 ¶¶ 289–290). Petitioner further contends Wense describes the use of LIN with CAN. *Id.* at 69–72 (citing Ex. 1008, 13, Fig 3).

Petitioner presents rationale why one of ordinary skill in the art would have combined Miesterfeld, Stewart, and Wense. Pet. 55–58, 72–77. For example, regarding the combination of Miesterfeld and Stewart, Petitioner contends, *inter alia*, both relate to real-time distributed computer control systems with a shared memory and use similar techniques to solve the same

problem (i.e., a shared memory architecture to exchange information between the hybrid control modules that make up a real-time distributed system). *Id.* at 59 (citing Ex. 1009, 3:15–49, 6:31–7:16; Ex. 1007, 6, 8, 11, 12). Regarding the combination of Miesterfeld and Wense, Petitioner contends, *inter alia*, both are in the same field of endeavor (distributed control systems in a multiplex networking environment) and the combination of their teachings would have been predictable. *Id.* at 77–82 (citing Ex. 1008, 11, 12; Ex. 1004 ¶¶ 72–75, 80–84, 271, 274, 275).

Patent Owner contends one of ordinary skill in the art would not have combined Miesterfeld and Stewart because Miesterfeld discloses a system where communication access to the shared memory is hardware based and Miesterfeld's handshake lines are inconsistent with Stewart. PO Resp. 45–47 (citing Ex. 1009, 3:59–4:31, 5:32–43, Figs. 2, 3A, 3B; Ex. 2004 ¶¶ 65–68). Patent Owner also contends Stewart is different from Miesterfeld because Stewart comprises only one network. *Id.* at 48 (citing Ex. 2006 ¶ 105).

In reply, Petitioner contends, regarding the combination of Miesterfeld and Stewart, the Board has already considered and rejected Patent Owner's contentions. Reply 19–20 (citing '458 FD, 50; Ex. 1038 ¶ 69). According to Petitioner, Stewart expressly discloses an expansive use of its invention, noting it could be used "in a real-time multiprocessor environment" and the design can be used "with both statically and dynamically reconfigurable systems." *Id.* at 20 (citing Ex. 1007, 7). Petitioner contends an open architecture multi-processor environment does not limit Stewart as Patent Owner contends. *Id.* (citing Ex. 1038 ¶ 69).

Regarding the contention that Miesterfeld's handshake lines are inconsistent with Stewart, Patent Owner's contentions are conclusory without identifying any technical incompatibility. Instead, we are persuaded by Dr. Koopman's declaration. Ex. 67–69. Additionally, we are persuaded that handshaking and spin locks are ordinary design choices used to access a shared resource.

In view of the foregoing, Petitioner has shown sufficiently that one of ordinary skill in the art would have combined the first and second networks (CAN and J1850) and interfaces of Miesterfeld with known memory management techniques (as further described by Stewart). Further, Petitioner has shown sufficiently that one of ordinary skill in the art would have combined the Miesterfeld CAN network with a known second network ("LIN") as described by Wense. *See KSR*, 550 U.S. at 418.

We agree the combination of Miesterfeld, Stewart, and Wense discloses 7(n).

In view of the above, we find Petitioner has shown, by a preponderance of the evidence, that the combination of Miesterfeld, Stewart, and Wense teaches or suggests the limitations of claim 7.

Challenged claims 8–19

Regarding challenged claims 8–19, which depend directly or indirectly from claim 7, Petitioner presents contentions supporting unpatentability. Pet. 51–86. Patent Owner presents opposing contentions in its Response for claims 7, 8, 10, 11, 18, and 19. PO Resp. 44–59. Petitioner addresses only claims 7, 8, 10, and 18 in its Reply.

Regarding claim 8, which recites "the storage resource includes a

bulletin board," Petitioner contends, as in the previous ground, the '705 patent describes a bulletin board as "any data base that enables users to send and/or read electronic messages, file, and/or other data that are of general interest and/or addressed to no particular person/process," and we have adopted this meaning. Pet. 77–78 (citing Ex. 1001, 5:10-14). According to Petitioner, Miesterfeld discloses a "shared memory" that uses "mailboxes" wherein each parameter is assigned to a mailbox, and each mailbox "is accessibl[e] to both VDB interface 26 and ITS data bus interface 28 so that each interface will be able to read from and/or write to memory 30." *Id.* at 78 (citing Ex. 1009, Abstract, 3:25-49). In operation, the VDB bus writes information to these mailboxes, which are then read by the ITS bus interface. *Id.* (citing Ex. 1009, 4:11–32; Ex. 1004 ¶¶ 305–306).

Patent Owner contends Miesterfeld's shared memory "mailboxes" are distinguishable from the bulletin board required by claim 8 because the "mailboxes" are incapable of accommodating "electronic messages, file, and/or other data that are of general interest and/or addressed to no particular person/process." PO Resp. 55. According to Patent Owner, Miesterfeld's "mailboxes" store exclusively predetermined content and lack the generality and flexibility of a bulletin board. *Id.* (citing Ex. 1009, 3:25–36, Fig. 1). Patent Owner refers to Miesterfeld:

> Preferably, **memory 30 is allocated in a predetermined fashion so that predetermined vehicle perameters** [sic] **occupy predetermined memory locations, referred to as mailboxes.** Each peramiter *[sic]* can be assigned a mailbox, shown as PAR1 and PAR2, . . . , PARN. Similarly, predetermined sections of the memory can be allocated as a mailbox for storing predetermined commands in predetermined

> memory locations, shown as COM1, COM2, through COMN. In this manner, **each parameter and command may be assigned to a certain mailbox, and only the specified data or command may be placed in that mailbox.** Ex. 1009, 3:25-36 (emphasis added).

Ex. 1009, 3:25–26.

According to Patent Owner, Miesterfeld's mailbox does not disclose a "bulletin board" as defined by the specification of the '705 patent. *Id.* (citing Ex. 2006 ¶ 123). Patent Owner contends Miesterfeld's "mailboxes" store exclusively predetermined content and lack the generality and flexibility of a bulletin board. *Id.* at 55. Patent Owner repeats its contention that a person of ordinary skill in the art would not have combined Miesterfeld, Stewart, and Wense. *Id.* at 55–56 (citing Ex. 2006 ¶ 124).

In reply, Petitioner contends Miesterfeld expressly discloses storing the very same information recited by the '705 patent in the same way. Reply 23 (citing PO Resp. 5:10–14; *see also* n.18). According to Petitioner, Miesterfeld expressly discloses that data is stored in a manner that is addressed to "no particular person/process." *Id.* (citing Ex. 1038 ¶ 77). Petitioner contends the shared memory (SPI RAM) simply stores data that may be obtained by any process on either bus and contains no fields indicating where the data should be delivered. *Id.* (citing Ex. 1009, 7:29–40, Fig. 5). Figure 5 of Miesterfeld is set forth below.

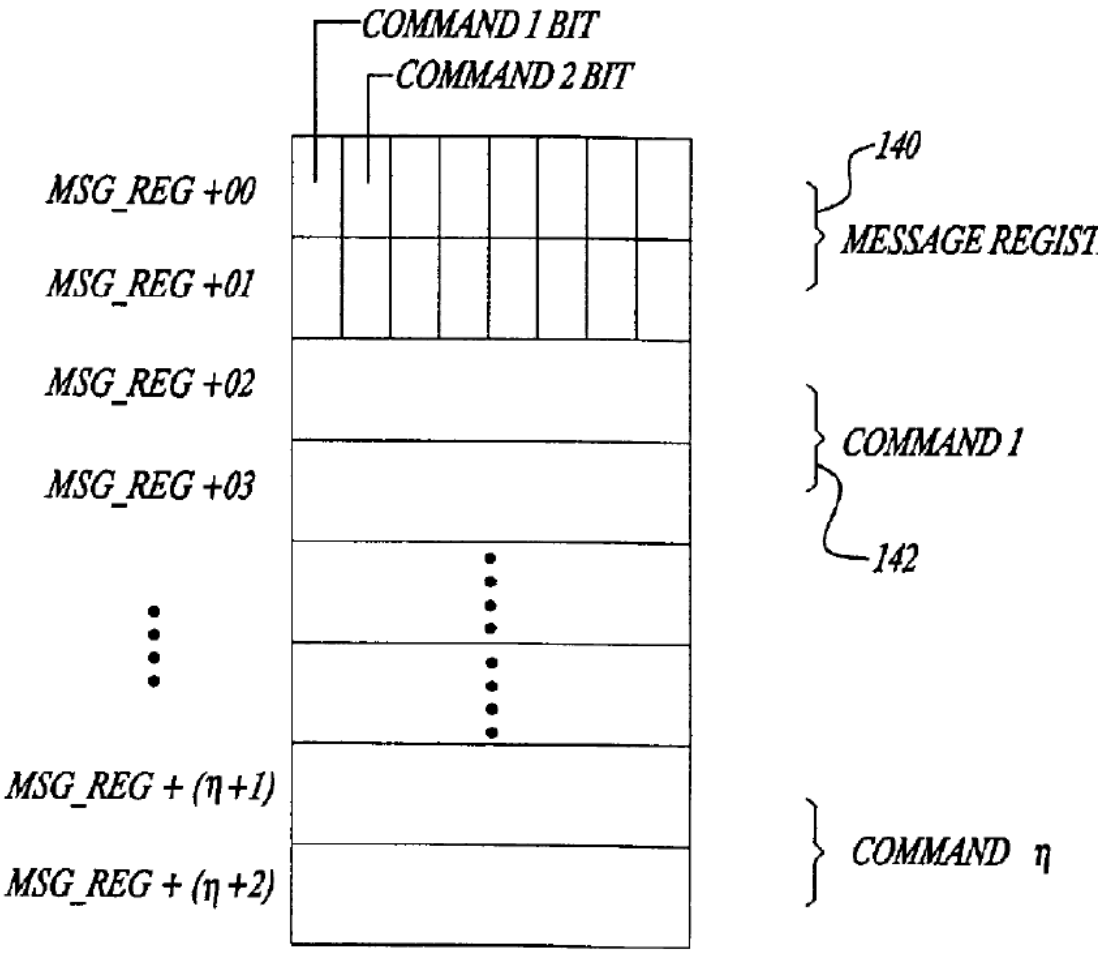

Figure 5 depicts SPI RAM shared memory.

Figure 5 of Miesterfeld is referred to by Petitioner as including no destination for stored data, and Petitioner contends Patent Owner concedes this through the deposition of Dr. Miller. *Id.* at 24 (citing Ex. 1039, 87:20–25; Ex. 1038 ¶ 78).

Petitioner contends Patent Owner is incorrect that Miesterfeld stores only "predetermined content" and is incapable of accommodating

"electronic messages, file, and/or other data that are of general interest and/or are addressed to no particular person/processes" because "[t]he data Miesterfeld stores includes files 'and/or other data' – including, for example, manufacturer data, engine data, or transmission data, 'and the like.'" *Id.* at 25 (citing Ex. 1009, 3:35-39). According to Petitioner, "[t]his is precisely the kind of data described as being stored in the '705 patent." *Id.* (Ex. 1001, 1:33–40, 6:22–25; Ex. 1038 ¶ 79).

Petitioner contends, regarding Patent Owner's use of "predetermined" to describe Miesterfeld memory, "Miesterfeld is simply describing how its data is organized, and is not in any way limiting on the type of data that is stored, or how it is (or is not) addressed" and "there is nothing in the claim language (or specification definition) that precludes placing data in certain locations in memory." *Id.* Petitioner observes, "[e]ven if 'predetermined' is correct, such content is merely a 'preferred' embodiment–as stated in the first word of PO's cited quote ('Preferably')." *Id.* at 25 n.20). According to Petitioner, the '705 patent expressly describes using similar predetermined locations as Miesterfeld. *Id.* (citing Ex. 1001, 6:4–10).

We agree with Petitioner that Miesterfeld's mailboxes constitute the "bulletin board" of claim 8. In particular, the Miesterfeld shared memory (SPI RAM) simply stores data that may be obtained by any process on either bus and contains no fields indicating where the data should be delivered. *Id.* (citing Ex. 1038 ¶ 77). In our determination, we find Dr. Koopman's declaration more persuasive than Dr. Miler's declaration.

In view of the above, we find that Petitioner has shown, by a preponderance of the evidence, that the combination of Miesterfeld, Stewart,

and Wense discloses the limitations of claim 8 and, as discussed *supra* regarding claim 7, that one of ordinary skill in the art would have been motivated to combine Miesterfeld, Stewart, and Wense as contended by Petitioner.

Regarding claim 10, which recites "wherein the computer program product is operable such that at least one of the different processes process the information in a manner that is isolated from temporal characteristics associated with at least one of a plurality of heterogeneous networks," Petitioner contends Miesterfeld discloses this limitation. Pet. 79–80. Petitioner contends Miesterfeld discloses the same system described by the '705 patent in connection with Figure 12 in which the application process utilizes the bulletin board mechanism to access all parameters, events, and real-time variables from the bulletin board and "[t]hus *the application process is decoupled from the temporal behavior of the input/output variables and can be triggered by a plurality of events* []." *Id.* at 79 (citing Ex. 1001, 8:64–9:2) (emphasis added).

Petitioner contends Miesterfeld discloses a "shared memory" that uses "mailboxes" wherein each parameter is assigned to a mailbox, and each mailbox "is accessibl[e] to both VDB interface 26 and ITS data bus interface 28 so that each interface will be able to read from and/or write to memory 30." *Id.* (citing Ex. 1009, Abstract, 3:25–49). According to Petitioner, in operation, the VDB bus writes information to these mailboxes, which are then read by the ITS bus interface and each message in the shared mailboxes is queued one-at-a-time for transmission. *Id.* at 79–80 (citing Ex. 1009, 4:11–32, 8:38-42 ("VDB message has been queued for transmission, control

passes to block 166 and VDB interface 62 clears all non-Zero message register bits that have been checked during this memory access cycle.”)). Petitioner then contends Miesterfeld’s system is “isolated from temporal characteristics” of at least one of the networks, just as the bulletin board retrieve mechanism in the ’705 patent is “isolated” from the temporal behavior of one of the networks. *Id.* at 80 (citing Ex. 1004 ¶¶ 312–314). As in the previous ground, we adopt Petitioner’s proposed meaning of “isolated” as the processes are not based on the temporal characteristics of a network.

Patent Owner contends Petitioner ignores the antecedent basis of the “different processes” of claim 10, which lie in claim elements 7(j) and 7(m). PO Resp. 56. Patent Owner contends the “processing” in the context of the claim is the processing of the “first interface-related first layer messages” and the “second interface-related first layer messages.” *Id.* According to Patent Owner, Petitioner’s discussion of the VDB bus writing information to mailboxes and queueing messages for transmission reveals absolutely nothing about temporal isolation of message processing. *Id.* at 56–57 (citing Pet. 79–80).

Patent Owner contends for this reason and the reasons set forth above with respect to claim 7, the combination of Miesterfeld, Stewart, and Wense does not disclose every element of claim 10, nor would a person of ordinary skill have been motivated to combine them to arrive at the invention of the ‘705 patent. *Id.* at 57 (citing Ex. 2006 ¶ 127).

In reply, Petitioner contends Miesterfeld uses shared memory that is accessible to both the VDB and ITS data bus interfaces and, thus, each bus

can read/write to the shared memory, which is the same as in the ’705 patent and meets the claim language. Reply 26 (citing Ex. 1001, 3:25–49; Ex. 1038 ¶ 82; ’458 FD, 38).

Petitioner contends Miesterfeld expressly states two criteria are used to determine an attempt to transmit a message onto VDB—and importantly, neither is dependent on ITS. *Id.* at 26–27. According to Petitioner, first, Miesterfeld states that the VDB interface will “only attempt to initiate a transmission onto VDB after 40 milliseconds have [passed] since VDB interface last successfully initiated a VDB transmission.” *Id.* (citing Ex. 1009, 8:50–60) (emphasis omitted). Petitioner contends Patent Owner’s expert conceded this to be the case. *Id.* (citing Ex. 1039, 80:8-81:24 (“Q: the writing to the VDB bus does not take into account the speed of the network, whatever that may be? A: Yeah Q: and it also likewise doesn’t take into account the rate of the ITS bus, whatever that may be, right? A: Yeah, I would agree with that.”). *Id.*

Petitioner further contends Miesterfeld discloses temporal isolation because each message in the mailbox is queued one at a time for transmission as the VDB bus is available and that “VDB interface 62 may need to arbitrate for control of VDB 48 when attempting a transmission.” *Id.* at 27 (citing Ex. 1010, 8:38–60). According to Petitioner, this means that the timing of transmissions on VDB is dependent upon VDB traffic, and independent of the ITS network, resulting in temporal isolation between the VDB and the ITS networks and the corresponding processes that handle messages on those different network interfaces. *Id.* (citing Ex. 1038 ¶ 83).

The “different processes” of claim 10 correspond to claim 7

limitations 7(j) and 7(m), discussed *supra*. We agree with Petitioner that Miesterfeld discloses a VDB bus and an ITS bus in which both access a shared memory. Miesterfeld discloses at least two situations in which timing of messages on VDB is independent of the other network (ITS). We particularly note Dr. Miller's cross-examination testimony in which he agreed that there is independence between Miesterfeld's two networks. Ex. 1039, 80:8-81:24. This "independence" constitutes the recited "isolation."

In view of the above, we find that Petitioner has shown, by a preponderance of the evidence, that the combination of Miesterfeld, Stewart, and Wense discloses the limitations of claim 10 and, as discussed *supra* regarding claim 7, that one of ordinary skill in the art would have been motivated to combine these references as contended by Petitioner.

Regarding claim 11, which recites "wherein the computer program product is operable such that the information is shared with an operating system," Petitioner relies on similar contentions directed to Stewart as presented for claim 11 in the previous ground, *supra*. Pet. 80–81. Patent Owner responds with substantially the same arguments as in the previous ground.

We find Petitioner's contentions regarding claim 11 to be persuasive for the reasons discussed with respect to the previous ground, and, as discussed, *supra*, regarding claim 7, we are unpersuaded by Patent Owner's contentions regarding the combination of Miesterfeld, Stewart, and Wense.

Regarding claim 18, which recites "wherein the computer program product is operable such that multiple modes of operation are enabled, wherein at least one of the modes includes a diagnostic mode," Petitioner

contends Miesterfeld discloses this limitation. Pet. 85. Petitioner refers to Miesterfeld regarding the use of diagnostic systems:

> In addition to the above-discussed vehicle systems, third party manufacturers design devices which require vehicle data as input in order to operate the device or implement some additional feature on the vehicle. *For example, third party manufacturers may provide navigation systems, diagnostic systems, internet interface systems, personal computer interface systems, and the like for receiving data.* In some applications, these systems may also seek to control vehicle functions where appropriate and safe.

Ex. 1009, 1:31–40 (emphasis added).

Petitioner contends "Miesterfeld goes on to state that one of the goals of the 'present invention' is to 'provide a gateway for enabling data exchange between vehicle systems and third party systems which may require such data'" and one of ordinary skill in the art would understand that Miesterfeld's invention discloses the claimed "diagnostic mode." *Id.* at 85 (citing Ex. 1009, 1:63–65; Ex. 1004 ¶¶ 336–337) (emphasis omitted).

According to Patent Owner, Petitioner overlooks the extensive description of alternative operating modes in the specification and the purpose of these modes is to "provide for a guaranteed deterministic behavior of the system." PO Resp. 58–59 (citing Ex. 1001, 11:52–53). Patent Owner contends, if providing a diagnostic gateway was a goal of the Miesterfeld invention, no figure, diagram or text in the specification reveals it and Miesterfeld does not disclose a "diagnostic mode," or for that matter any alternative mode of operation as required by the language of Claim 18. *Id.* at 58–59. According to Patent Owner, Petitioner's statement that a

person of ordinary skill would understand that Miesterfeld discloses such a mode is simply speculation. *Id.* at 59 (citing Ex. 2006 ¶ 132).

Patent Owner contends for these reasons and the reasons set forth above regarding claim 7, the combination of Miesterfeld, Stewart, and Wense does not disclose every element of claim 18, nor would a person of ordinary skill have been motivated to combine them to arrive at the invention of the ’705 patent. *Id.* at 59 (citing Ex. 2006 ¶ 133).

In reply, Petitioner contends Miesterfeld discloses that third parties provide the diagnostic systems and this means that OEM equipment will not have the diagnostic system being referred to. Reply 27 (citing Ex. 1038 ¶ 85). According to Petitioner, one mode is OEM, and a second mode is with the diagnostic system added. *Id.* at 27–28. Petitioner contends a POSITA would also understand that any diagnostic equipment necessarily operates while the system is running to allow inspection of the system. *Id.* at 28.

As discussed in the previous ground, we construe “diagnostic mode” as a mode, distinct from normal operation, that allows inspection of the system while it is running. We are not persuaded by Petitioner’s contentions regarding claim 18 as they are inadequate and based on speculation. *See* Ex. 2006 ¶¶ 130–132. In particular, although Miesterfeld refers at high level to “diagnostic systems” provided by third party manufacturers, Petitioner does not sufficiently identify the diagnostic mode “as a mode, distinct from normal operation, that allows inspection of the system while it is running.”

Remaining Dependent claims 9, 12–17, 19

Remaining claims 9, 12–17, and 19 depend directly or indirectly from claim 7. Petitioner sets forth contentions and evidence to support the

unpatentability of these claims. Pet. 78, 81–86. Patent Owner does not directly address these claims and/or relies on the contentions presented for independent claim 7.

Petitioner contends Miesterfeld discloses claim 9, which recites "wherein the computer program product is operable such that the first interface-related second layer part carries out the processing of the first interface-related first layer message." Pet. 78. According to Petitioner, as discussed *supra* regarding limitation 7(j), Miesterfeld discloses that information to be stored in memory is first formatted into ITS data (the claimed "first interface-related first layer message") that is received by the first interface-related first layer part of the "intelligent transportation system (ITS) data bus 56." *Id.* (citing Ex. 1009, 3:54–58). Petitioner contends once received, a second layer part of the ITS data bus interface (the claimed "first interface-related second layer part") processes the information for storage into memory. *Id.* (citing Ex. 1009, 7:29–31). Petitioner contends claim 9 is thus expressly disclosed for the same reasons discussed in connection with limitation 7(j). *Id.* (citing Ex. 1004 ¶¶ 308–309).

Petitioner contends claim 12, which recites "is operable such that objects are generated based on a change of state of the information stored on the storage resource," is disclosed by Miesterfeld. Pet. 81–82. According to Petitioner, when a message is stored for example to be transmitted to the VDB from ITS, the message register is set to non-zero. *Id.* at 81 (citing Ex. 1009, 7:61–8:60, Fig. 6). According to Petitioner, the "object" is a value to be transmitted in a message, which corresponds to a particular command in addition to that command's message register bit and that object is

"generated" when the command value changes from invalid to valid. *Id.* at 82. Petitioner contends the change in validity occurs responsive to the message register bit corresponding to that command changing state from zero to one. *Id.* at 82–83 (citing Ex. 1004 ¶¶ 320–321).

Regarding claim 13, which depends from claim 12, and recites "wherein the objects include at least one of flags, events, signals, and interrupts," Petitioner contends Miesterfeld sets the message register to a non-zero, which is a "flag." Pet. 83 (citing Ex. 1009, 7:61–8:60, Fig. 6; Ex. 1004 ¶ 324). Petitioner contends Miesterfeld also discloses the use of "signals." *Id.* (citing Ex. 1009, 7:52–56 (" ITS data bus interface 58 must also write the command code and the action code into the appropriate, predetermined addresses of SPI RAM 64 in addition to setting the appropriate bit of message register 140.")).

Regarding claims 14, 15, and 16, which recite "the real-time involves a response time" that is measured, respectively in milliseconds, microseconds, and less than 1 second, Petitioner contends Miesterfeld discloses these limitations. Pet. 83–84. According to Petitioner, Miesterfeld discloses that the information is shared in real-time because it specifies that the sharing operations take place within microseconds and Miesterfeld specifies that once the shared memory is available, the ITS data bus must notify the system that it will be accessing the shared memory (the SPI RAM) in less than 5 microseconds, and then finish reading or writing to the shared memory in less than 5 microseconds. *Id.* (citing Ex. 1009, 6:43–62). Petitioner contends the VDB interface is expected to begin to transmit any data received from the ITS data bus within 40 milliseconds and thus,

Miesterfeld expressly discloses a response time of "milliseconds" (claim 14) and "microseconds" (claim 15), both of which are less than one second and thus also disclose claim 16. *Id.* (citing Ex. 1009, 8:51–56; Ex. 1004 ¶ 330).

Regarding claim 17, which recites "wherein the computer program product is part of an apparatus including a plurality of layers including at least two of an application layer, a middleware layer, a real-time operating system layer, a device driver layer, and a hardware abstraction layer," Petitioner contends as discussed *supra* regarding claim 11 in the previous ground, Stewart discloses the claim 11 limitations. Pet. 84–85. According to Petitioner, a POSITA would have appreciated that these software layers could be running in Miesterfeld's VDB Interface microcontroller. *Id.* at 85 (citing Ex. 1004 ¶ 333).

Regarding claim 19, which recites "wherein the computer program product is operable such that at least a portion of the message is processed at each of a plurality of layers," Petitioner contends Miesterfeld discloses this limitation. Pet. 85–86. According to Petitioner, as discussed *supra* regarding limitations 7(j) and 7(n), and similar to the discussion of claim 19 in the previous ground, the first interface portion includes a first interface--related second layer part that processes the first interface-related first layer message and the second interface portion includes a second interface-related second layer part that processes the second interface-related first layer message. *Id.* at 86 (citing Ex. 1004 ¶ 341). Petitioner contends Miesterfeld processes each incoming J1850 protocol message from the VDB interface in a first layer to receive the message as part of the functionality of the VDB Interface 62 microcontroller and that same microcontroller then

processes the command object information a second time to convert it into a format suitable for use as a command object in SPI RAM. *Id.* (citing Ex. 1004 ¶¶ 340, 341; Ex. 1009, 6:26–7:9).

In view of the above, we are persuaded by Petitioner's contentions regarding remaining claims 9, 12–17, and 19 and we find that Petitioner has shown, by a preponderance of the evidence, that the combination of Miesterfeld, Stewart, and Wense discloses the limitations of these claims. Additionally, we note Patent Owner has not expressly addressed these contentions in its Patent Owner Response.

Having considered the *Graham* factors, we conclude that Petitioner demonstrates, by a preponderance of the evidence, that claims 8–17 and 19 are unpatentable under 35 U.S.C § 103(a) over Miesterfeld, Stewart, and Wense, but does not demonstrate by a preponderance of the evidence that claim 18 is unpatentable over Miesterfeld, Stewart, and Wense.

Constitutionality of Inter Partes Review Proceedings

Patent Owner contends that "this IPR should be terminated and the petition dismissed because the IPR system is unconstitutional." PO Resp. 62–63. This argument is foreclosed by the Supreme Court's determination otherwise. *Oil States Energy Services, LLC v. Greene's Energy Group, LLC*, 138 S.Ct. 1365, 1370 (2018) ("In this case, we address whether inter partes review violates Article III or the Seventh Amendment of the Constitution. We hold that it violates neither.").

IV. CONCLUSION

We conclude that Petitioner demonstrates, by a preponderance of the evidence, that claims 8–19 are unpatentable under 35 U.S.C. § 103(a) over Posadas, Stewart, and Wense, and claims 8–17 and 19 are unpatentable under 35 U.S.C. § 103(a) over Miesterfeld, Stewart, and Wense.

V. ORDER

It is

ORDERED that, based on a preponderance of the evidence, claims 8–19 of U.S. Patent No. 8,209,705 B2 are held to be unpatentable; and

FURTHER ORDERED that, because this is a final written decision, parties to this proceeding seeking judicial review of our decision must comply with the notice and service requirements of 37 C.F.R. § 90.2.

PETITIONER:

James M. Glass
Brett N. Watkins
Richard A. Lowry
QUINN EMANUEL URQUHART & SULLIVAN, LLP
jimglass@quinnemanuel.com
brettwatkins@quinnemanuel.com
richardlowry@quinnemanuel.com

PATENT OWNER:

Thomas H. Kramer
O'KELLY ERNST & JOYCE, LLC
tkramer@oeblegal.com

Thomas Meagher
Alan C. Pattillo
MEAGHER EMANUEL LAKS GOLDBERG & LIAO, LLP
tmeagher@meagheremanuel.com
cpattillo@meagheremanuel.com