UNITED STATES PATENT AND TRADEMARK OFFICE

BEFORE THE PATENT TRIAL AND APPEAL BOARD

BMW OF NORTH AMERICA, LLC AND MERCEDES-BENZ USA, LLC,
Petitioners

v.

Stragent, LLC,
Patent Owner

Case IPR2021-00417
U.S. Patent 10,248,477

STRAGENT, LLC'S PATENT OWNER RESPONSE

TABLE OF CONTENTS

I. INTRODUCTION ..... - 1 -

II. THE '477 PATENT ..... - 1 -

III. INSTITUTED GROUNDS ..... - 1 -

IV. THE SCOPE AND CONTENT OF THE PRIOR ART ..... - 2 -

1. MIESTERFELD (EX.1009) ..... - 2 -
2. WONG (EX.1010). ..... - 3 -
3. WENSE (EX.1013) ..... - 3 -
4. NIKKLASON (EX.1014) ..... - 4 -
5. GRATTAN (EX.1012) ..... - 4 -

V. LEGAL STANDARDS ..... - 4 -

1. OBVIOUSNESS ..... - 4 -
2. ENABLEMENT ..... - 5 -

VI. LEVEL OF ORDINARY SKILL IN THE ART ..... - 7 -

VII. CLAIM CONSTRUCTION ..... - 8 -

1. THE GOVERNING CLAIM CONSTRUCTION STANDARD ..... - 8 -
2. CONSTRUCTION OF SPECIFIC TERMS ..... - 8 -

a. "threshold" ..... *- 8 -*

b. "the … memory comprises at least one bulletin board that [stores information] [includes the stored information] that is capable of being accessed by any process of any network having access to the electronic control unit" ..... *- 9 -*

c. "diagnostic mode" ..... *- 11 -*

d. "debugging mode" ..... *- 12 -*

e. "share the stored information" ..... *- 14 -*

f. "protocol" ..... *- 14 -*

g. "heterogenous process" ..... *- 15 -*

h. "issue a storage resource request" ..... *- 15 -*

VIII. PETITIONER HAS NOT PROVEN THAT THE '477 PATENT CLAIMS ARE UNPATENTABLE ..... - 16 -

1. GROUND 1 – WHETHER CLAIMS 1-3, 6-8, 12-14, 17-19, 23-25, AND 29 ARE OBVIOUS OVER MIESTERFELD, WONG, GRATTAN, WENSE, AND NIKKLASON . - 16 -

a. Claim 1 ..... *- 16 -*

A. Limitation 1[a] ..... - 16 -

B. Limitations 1[d] and 1[e] ..... - 24 -

C. Limitation 1[f] followed by Limitations 1[g]-1[m] ..... - 28 -

D. Limitation 1[h] ..... - 29 -

E. Limitations 1[i] through 1[l] ..... - 34 -

F. Limitation 1[m] ..... - 34 -

G. Limitation 1[n] ..... - 48 -

H. Limitation 1[p] ..... - 54 -

I. Limitation 1[q] ..... - 54 -

b. Claim 2 ..... *- 56 -*

c. Claim 3 ..... *- 56 -*

d. Claims 12-14 and 17-19 ..... *- 59 -*

e. Claim 23 ..... *- 59 -*

f. Claim 30 ..... *- 60 -*

2. GROUND 2: WHETHER MIESTERFELD, WONG, GRATTAN, WENSE, AND NIKKLASON IN COMBINATION WITH BOLING RENDERS OBVIOUS CLAIMS 4-5, 15-16, AND 26-27 ..... - 60 -

a. Claim 4 ..... *- 60 -*

b. Claim 5 ..... *- 62 -*

c. Claims 15-16 and 26-27 ..... *- 62 -*

3. GROUND 3: WHETHER MIESTERFELD, WONG, GRATTAN, WENSE, AND NIKKLASON IN COMBINATION WITH STEGER RENDERS OBVIOUS CLAIMS 9 AND 20 - 62 -

4. GROUND 4: WHETHER MIESTERFELD, WONG, GRATTAN, WENSE, AND NIKKLASON IN COMBINATION WITH STANLEY RENDERS OBVIOUS CLAIMS 10 AND 21 - 63 -

5. GROUND 5: WHETHER MIESTERFELD, WONG, GRATTAN, WENSE, NIKKLASON, BOLING, STEGER, AND STANLEY RENDER OBVIOUS CLAIMS 11 AND 22 - 63 -

6. GROUND 6: WHETHER MIESTERFELD, WONG, GRATTAN, WENSE, NIKKLASON, BOLING, AND STANLEY RENDER OBVIOUS CLAIM 28 ..... - 63 -

IX. CONCLUSION ..... - 64 -

TABLE OF AUTHORITIES

CASES

ActiveVideo Networks, Inc. v. Verizon Commc'ns, Inc.,

694 F.3d 1312 (Fed. Cir. 2012)---------- - 23 -, - 28 -

Free Stream Media Corp. v. Alphonso Inc.,

996 F.3d 1355 (Fed.Cir. 2021) ---------- - 8 -

Graham v. John Deere Co.,

383 U.S. 1 (1966)---------- - 4 -

In re Magnum Oil Tools Int'l, Ltd.,

829 F.3d 1364 (Fed. Cir. 2016)---------- - 5 -

Intelligent Bio-Sys., Inc. v. Illumina Cambridge Ltd.,

821 F.3d 1359 (Fed. Cir. 2016)---------- - 5 -

Interconnect Planning Corp. v. Feil,

774 F.2d 1132 (Fed. Cir. 1985)---------- - 55 -

InTouch Techs., Inc. v. VGO Commc'ns, Inc.,

751 F.3d 1327 (Fed. Cir. 2014)---------- - 22 -

KSR Int'l Co. v. Teleflex Inc.,

550 U.S. 398 (2007)---------- - 4 -, - 5 -, - 24 -, - 55 -

Minn. Mining & Mfg. Co. v. Blume,

684 F.2d 1166 (6th Cir. 1982) ---------- - 6 -

Mylan Institutional LLC v. Aurobindo Pharma Ltd.,

857 F.3d 858 (Fed. Cir. 2017) ---------- 6 -

Network-1 Techs., Inc. v. Hewlett-Packard Co.,

981 F.3d 1015 (Fed. Cir. 2020)---------- 8 -

Orexo AB v. Actavis Elizabeth LLC,

903 F.3d 1265 (Fed. Cir. 2018)---------- 55 -

OSRAM Sylvania, Inc. v. Am. Induction Techs., Inc.,

701 F.3d 698 (Fed. Cir. 2012) ---------- 5 -

ParkerVision, Inc. v. Qualcomm Inc.,

903 F.3d 1354 (Fed. Cir. 2018)---------- 22 -

Phillips v. AWH Corp.,

415 F.3d 1303 (Fed. Cir. 2005)---------- 8 -

Raytheon Techs. Corp. v. Gen. Elec. Co.,

993 F.3d 1374 (Fed. Cir. 2021)---------- 7 -, 47 -

TQ Delta, LLC v. CISCO Sys., Inc.,

942 F.3d 1352 (Fed. Cir. 2019)---------- 24 -, 28 -

TABLE OF EXHIBITS

Exhibit	Title
2001	Declaration of Jeffrey A. Miller, Ph.D , including *curriculum vitae*
2002	Decision Denying Institution of *Inter Partes* Review, IPR2021-00726, Patent 10,002,036
2003	Decision Denying Institution of Inter Partes Review, IPR2021-00727, Patent 10,002,036
2004	Decision Denying Institution of Inter Partes Review, IPR2021-00728, Patent 10,002,036
2005	Microsoft Computer Dictionary, 5th Edition (2002)
2006	Newton's Telecom Dictionary, 15th Edition (1999)
2007	Webster's New World Computer Dictionary, 10th Edition (2003)
2008	Datasheet for HIP7030A2

I. INTRODUCTION

The Board should not cancel any of the challenged claims of this *inter partes* review of U.S. Patent No. 8,566,477 ("the '477 Patent") because Petitioner did not establish by a preponderance of the evidence any of the challenged claims are unpatentable for multiple reasons.

Petitioner has failed to show that various limitations of the '477 Patent claims are found in the prior art. Even if the prior art discloses individual limitations, Petitioner has not shown that the prior art would have motivated a POSITA to combine the individual elements and then to add the additional elements of the '477 Patent claims that are not found in the prior art at all.

II. THE '477 PATENT

The '477 Patent is generally directed towards storing and sharing information using an automotive electronic control unit ("ECU") between the FlexRay, CAN and LIN networks, all of which utilize different protocols. The Patent is further considered in connection with the individual limitations.

III. INSTITUTED GROUNDS

All grounds for challenging the '477 Patent claims are based on 35 U.S.C. §103(a). The '477 patent claims priority through a chain of continuations to an application that was filed before the effective dates of the Leahy-Smith America Invents Act, Pub. L. No. 112-29, 125 Stat. 284 (2011)("AIA") amendments to 35

U.S.C. §§102 and 103. Therefore, the pre-AIA version of §103(a) is here applicable.

The instituted grounds of review are:

Ground	Claims	Reference/Basis
1	1-3, 6-8, 12-14, 17-19, 23-25, and 29-30	Miesterfeld, Wong, Grattan, Wense, and Nikklason
2	4-5, 15-16, and 26-27	Miesterfeld, Wong, Grattan, Wense, Nikklason, and Boling
3	9 and 20	Miesterfeld, Wong, Grattan, Wense, Nikklason, and Steger
4	10 and 21	Miesterfeld, Wong, Grattan, Wense, Nikklason, and Stanley
5	11 and 22	Miesterfeld, Wong, Grattan, Wense, Nikklason, Boling, Steger, and Stanley
6	28	Miesterfeld, Wong, Grattan, Wense, Nikklason, Boling, and Stanley

IV. THE SCOPE AND CONTENT OF THE PRIOR ART

The references are summarized below.

1. Miesterfeld (Ex.1009)

Petitioner's primary reference is U.S. Patent No. 6,141,710 to Miesterfeld ("Miesterfeld")(Ex.1009). Miesterfeld describes a gateway with a memory that can be accessed by both what Miesterfeld refers to as a vehicle data bus ("VDB")" and an intelligent transportation system data bus ("ITS").

2. Wong (Ex.1010).

U.S. Patent 6,434,459 ("Wong") discloses "an automobile information system that facilitates communication within clusters of components and among various clusters. Each cluster has a controller that provides a platform for supporting many diverse components." (Ex.1010 at 2:41–45). Wong discloses that a cluster controller is a general purpose computer that can run the Windows CE operating system. (Ex.1010 at 6:10–22).

Wong discloses automobile systems, but does not disclose an ECU with multiple different network interfaces or sharing information between multiple networks utilizing different protocols.

3. Wense (Ex.1013)

Wense (Ex.1013) describes the Local Interconnect Network (LIN) communication standard, and, particularly, the properties of LIN in comparison with other networking standards, LIN's position in the relative hierarchy of networking applications, and its potential operation as a subnetwork of a CAN system. The reference does not disclose sharing information between multiple networks utilizing different protocols.

4. Nikklason (Ex.1014)

Nikklason discloses controlling a plurality of devices connected to a common bus, such as a CAN bus. The reference does not disclose sharing information between multiple networks utilizing different protocols.

5. Grattan (Ex.1012)

Grattan (Ex.1012) is a manual for Windows CE 3.0 application programming.

The remaining references, Boling (Ex.1032), Steger (Ex.1017) and Stanley (Ex.1018), are cited for specific points in relation to dependent claims. None of the references disclose sharing information between multiple networks utilizing different protocols.

V. LEGAL STANDARDS

1. Obviousness

The question of non-obviousness is resolved on the basis of underlying factual determinations including (1) the scope and content of the prior art, (2) any differences between the claimed subject matter and the prior art, and (3) the level of skill in the art. *Graham v. John Deere Co.*, 383 U.S. 1, 17-18 (1966); *see also KSR Int'l Co. v. Teleflex Inc.*, 550 U.S. 398, 399 (2007) ("While the sequence of these questions might be reordered in any particular case, the [Graham] factors define the controlling inquiry."). A petitioner seeking to invalidate a patent as

obvious must demonstrate "both 'that a skilled artisan would have been motivated to combine the teachings of the prior art references to achieve the claimed invention, and that the skilled artisan would have had a reasonable expectation of success in doing so.'" *Intelligent Bio-Sys., Inc. v. Illumina Cambridge Ltd.*, 821 F.3d 1359, 1367–68 (Fed. Cir. 2016) (citation omitted); see *KSR*, 550 U.S. at 418 (for an obviousness analysis, "it can be important to identify a reason that would have prompted a person of ordinary skill in the relevant field to combine the elements in the way the claimed new invention does"). See also *OSRAM Sylvania, Inc. v. Am. Induction Techs., Inc.*, 701 F.3d 698, 706 (Fed. Cir. 2012) (""skilled artisan would have been motivated to combine the teachings of the prior art references to achieve the claimed invention, and that the skilled artisan would have had a reasonable expectation of success in doing so."").

A petitioner's assertion of obviousness "cannot employ mere conclusory statements. The petitioner must instead articulate specific reasoning, based on evidence of record, to support the legal conclusion of obviousness." *In re Magnum Oil Tools Int'l, Ltd.*, 829 F.3d 1364, 1380 (Fed. Cir. 2016) (citing *KSR*, 550 U.S. at 418).

2. Enablement

A disclosure in the prior art does not render a patent on the method or product invalid for obviousness if the prior art does not disclose any method of

achieving the stated goal:

> … if the prior art teaches a mixture containing a compound but does not enable its purification, then the purified form of the compound may not have been obvious over the prior art mixture.

Mylan Institutional LLC v. Aurobindo Pharma Ltd., 857 F.3d 858, 871 (Fed. Cir. 2017).

As will be developed in this Response in connection with specific claim limitations, Petitioner relies essentially entirely on the single Miesterfeld reference to support limitations 1[m], 1[n], 1[p] and [q], and equivalent limitations in other claims. Thus, this case is substantively the same as the facts in a recent decision from a Federal Circuit, where the Court held:

> … the evidence of record must … establish that a skilled artisan could have made the claimed invention. As the Sixth Circuit aptly explained:
>
> > The enabling disclosure concept [for a prior art reference] is a commonsense factor in making a determination of obviousness, for if neither any item of prior art, nor the background knowledge of one with ordinary skill in the art, would enable one to arrive at an invention, that invention would not be obvious. But to argue, as does [the patentee], that the sufficiency of each prior art teaching must be tested under the strict standard requiring an enabling disclosure is to shift the emphasis from obviousness in light of the prior art, taken as a whole, to the sufficiency of each prior art teaching separately considered.[1]
>
> In the absence of such other supporting evidence to enable a skilled artisan to make the claimed invention, a standalone § 103 reference must enable the portions of its disclosure being relied upon. … In this context the reference must necessarily enable the relied-upon portion

[1] *Minn. Mining & Mfg. Co. v. Blume*, 684 F.2d 1166, 1173 n.10 (6th Cir. 1982).

> of its own disclosure—the same standard applied to anticipatory references.

Raytheon Techs. Corp. v. Gen. Elec. Co., 993 F.3d 1374, 1381 (Fed. Cir. 2021) (internal citations omitted).

VI. LEVEL OF ORDINARY SKILL IN THE ART

The Institution Decision stated that a person of ordinary skill in the art at the relevant time would have a bachelor's degree in electrical engineering, computer engineering, or a related engineering discipline and at least two years of industry experience in the field of distributed computing or automotive engineering, or equivalent experience, education, or both and would also have knowledge or familiarity with in-vehicle computing. (Decision at 8-9).

Patent Owner states that a person having ordinary skill in the relevant art at the time of the invention would have had the qualifications of or equivalent to either a master's degree in electrical engineering, computer science, or computer engineering with course work or research in embedded networking technologies or an undergraduate degree in electrical engineering, computer science, or computer engineering with at least two years of relevant work experience in industry. (Ex.2001 ¶22). But the difference between the two proposed levels does not impact the arguments below as Patent Owner's expert had utilized the higher level of skill in his analysis of the inventions and the prior art. (*id.*)

VII. CLAIM CONSTRUCTION

1. The Governing Claim Construction Standard

"Claim construction requires a determination as to how a person of ordinary skill in the art would understand a claim term in the context of the entire patent, including the specification." *Free Stream Media Corp. v. Alphonso Inc.*, 996 F.3d 1355, 1367 (Fed.Cir. 2021) (citing *Phillips v. AWH Corp.*, 415 F.3d 1303, 1313 (Fed. Cir. 2005) (*en banc*)). "'The claims themselves provide substantial guidance as to the meaning of particular claim terms' and 'the specification is the single best guide to the meaning of a disputed term.'" *Network-1 Techs., Inc. v. Hewlett-Packard Co.*, 981 F.3d 1015, 1022 (Fed. Cir. 2020) (quoting *Phillips* at 1314–15).

2. Construction of Specific Terms

a. "threshold"

The term should be construed as "a value above which something is true." (Ex.2001 ¶ 47). Petitioner's construction that includes the phrase "value … below which it is not or will not" is legally incorrect. (Pet.13).

All the independent claims refer only to an upper threshold ("the threshold associated with the storage resource request has been <u>reached</u>" and "threshold associated with the storage resource request has <u>not been reached</u>"), and do not refer to any "value below" as proposed by Petitioner.

The specification also uses the term "threshold" as denoting only an upper level: "[a]fter a certain time has elapsed … beyond a configurable threshold …. (7:59-64; 8:18-23). Petitioner has not cited any claim language or intrinsic record to support its assertion that "threshold" includes both an upper and a lower limit. (Ex.2001 ¶¶ 45- 46).

b. "the … memory comprises at least one bulletin board that [stores information] [includes the stored information] that is capable of being accessed by any process of any network having access to the electronic control unit"

Dependent claims 2, 3, 5, 11, 13 and 14, either directly or as a dependency, include the limitation that "the memory comprises at least one bulletin board that *stores information that may be addressed* by any process of any network having access to the storage resource of the electronic control unit."

Dependent claims 24, 25 and 28, either directly or as a dependency, include the limitation that "the non-volatile memory comprises at least one bulletin board that *includes the stored information that is capable of being accessed* by any process of any network having access to the electronic control unit."

Because the entire limitation informs the proper meaning of "bulletin board," the complete claim limitations should be construed rather than the term "bulletin board" in isolation.

Petitioner cites the construction of the term "bulletin board" in '705 IPR, but the claim language in the '705 IPR was different than that found here.

Petitioner's construction errs, because a bulletin board need not be a data base as Petitioner proposes. The ordinary meaning of "bulletin board" does not mandate a database. See, for example, Microsoft Computer Dictionary, 5th Edition (2002) (Ex.2005); Newton's Telecom Dictionary, 15th Edition (1999) (Ex.2006); and Webster's New World Computer Dictionary, 10th Edition (2003) (Ex.2007). (See Ex.2001 ¶ 54).

Further, independent claims 1 and 12 of the '477 Patent already limit the ECU to include "a database." Accepting Petitioner's construction would create an unexplained and undesirable overlap with two separate databases. Finally, the "bulletin board" claims already define their function, and adding the limitation that the "bulletin boards" further function as databases is incongruous with their claimed functions.

The specification supports Patent Owner's construction. The '477 Patent states that a bulletin board has a "data structure" (4:43-44 – "the data structure of the bulletin board").

To be sure, the specification indicates that a bulletin board "may" be a database, and may "enable users to send and/or read electronic messages, files, and/or other data that are of general interest and/or addressed to no particular person/process." (4:45-49). However, these are particular embodiments and the "may" suggests that a "bulletin board" is not necessarily a database. Further,

although the specification does indicate that a bulletin board can be viewed as open to anyone, the specification then also provides for a "a data access manager (508)," which is also a limitation in independent claims 1 and 12. Thus, while a bulletin board could be "enable[] users to send and/or read electronic messages, files, and/or other data that are of general interest and/or addressed to no particular person/process," the claims now include an access manager that, *inter alia*, limits access.

In any event, Petitioner's proposed construction is wrong because the plain language of the claims prohibits the bulletin board from being accessed by any user or process, and the bulletin board is not open to anything "of general interest and/or addressed to no particular person/process." Rather, the claims here expressly limit the bulletin board to memory that "stores information that may be addressed by *any* process of any network having access to the storage resource of the electronic control unit."

In the context of the claims here in issue, the term "bulletin board" denotes a data structure that may be accessed by a process of any network having access to the storage resource of the electronic control unit. (Ex.2001 ¶57).

c. "diagnostic mode"

Patent Owner agrees with Petitioner's construction of "diagnostic mode" to the extent of agreeing that it is "a mode, distinct from normal operation, that allows

inspection of the system while it is running." (Pet.13-14). Patent Owner adds, however, that Petitioner's proposed construction does not construe the word "diagnostic," and, particularly, does not clearly distinguish between "diagnostic" and the "debugging" found in other claims. The complete construction of "diagnostic mode" should be "a mode, distinct from normal operation, that allows the inspection of the health of the system while it is running." The construction is supported by the plain meaning of the word "diagnostic" (Ex.2007 at 108), which is distinct from "debugging" as detailed below. (Ex.2001 ¶58).

d. "debugging mode"

"Debugging" is a term well recognized in the art. It means "to detect, locate and fix errors" of a program or a system. (Ex.2007). It is distinct from a diagnostic mode because diagnostics relates to checking the health of a system, while debugging involves fixing errors that have already occurred. (Compare Ex.2007 pp.102 and 108).

The distinction between debugging and diagnostics is noted in the '477 Patent specification. Thus, although the '477 Patent included the diagnostic mode as part of the "emergency or debug" module, the specification also clearly differentiated the diagnostic mode as a separate element:

> The emergency or debug mode lets the network run in a fail-safe reduced operation mode or in a diagnostic mode that allows inspection of the system, while it is running.

(11:36-39).

Most critically, however, claims 4-5, 15-16, 26-27 and 28 claim separately both a "diagnostic mode" and a "debugging mode." Claim differentiation mandates in this case that the two terms be distinguished with each being afforded their ordinary meaning.

"Debugging mode" is correctly construed as "a program or module to detect, locate and fix errors in the system while it is running." The specification and the claims' structure require that the debugging be of the ECU or the system. Thus, the specification states that the "emergency or debug mode lets the network run in a fail-safe reduced operation mode or in a diagnostic mode that allows inspection of the system**,** while it is running." (11:36-39). The "**,**" before the phrase "while it is running" ordinarily means that the phrase is directed to all the preceding modes. The "debugging mode" claims 5, 11, 16, 22, 27 and 28 all require that the debugging mode be run by code in the ECU which further supports construing "debugging mode" as something run while the system is running. (Ex.2001 ¶63).

e. "share the stored information"

Independent claims 1 and 12 recite "share the stored information." The ordinary meaning of "share" is "to partake of, use, experience, occupy, or enjoy with others."

In this case, the term should be construed as permitting access to information in the storage resource, and particularly the information that was stored in the storage resource in accordance with the immediately prior limitations. (Ex.2001 ¶65).

f. "protocol"

Petitioner states that "protocol" is a well-understood term in computer science and means "a standard that specifies the format of data as well as the rules to be followed in transmitting it." Patent Owner agrees with Petitioner's proposed construction as one valid construction provided that "format of data" is understood to mean the formatting as required by the applicable standard. Dr. Miller would have construed "protocol" as "a set of rules or procedures utilizing preexisting agreement as to how information will be structured and how each side will send and receive it for transmitting information between electronic devices," although the difference in the two expressions is not material (Ex.2001 ¶66).

g. "heterogenous process"

Patent Owner does not oppose Petitioner's construction of "heterogenous process(es)" as "any different process with at least one aspect that is different."

h. "issue a storage resource request"

All the independent claims include the limitation "issue a storage resource request." The plain meaning of the phrase is that that a procedure asks permission of an entity that can grant such permission the right to store information. The ordinary meaning of the word "request" is (a) "the act or an instance of asking for something" (https://www.merriam-webster.com/dictionary/request); or (b) "the act of politely or officially asking for something." (Ex.2001 at ¶69).

The specification uses the term "request" consistently with the ordinary meaning of the term:

> FIG. 10 describes the bulletin board store procedure (804) in more detail. Before new data can be stored in the bulletin board, the procedure has to request the access right to the common resource, a section of the non-volatile or volatile memory, from the operating system (1001). This is called explicit resource management.

(7:52-57).

> FIG. 11 describes the bulletin board retrieve procedure (1101) in more detail. Before data can be retrieved from the bulletin board, the procedure has to request the access right to the common resource, a section of the non-volatile or volatile memory, from the operating system (1102).

(8:12-16).

The word "request" does not have any technical meaning that is different from the ordinary meaning of the word. Thus, the phrase "issue a storage resource request" should be construed as "a procedure asks permission of an entity that can grant such permission the right to store information." (Ex.2001 at ¶71).

VIII. PETITIONER HAS NOT PROVEN THAT THE '477 PATENT CLAIMS ARE UNPATENTABLE

1. Ground 1 – Whether Claims 1-3, 6-8, 12-14, 17-19, 23-25, and 29 Are Obvious Over Miesterfeld, Wong, Grattan, Wense, and Nikklason

a. Claim 1

A. Limitation 1[a]

Petitioner admits that Miesterfeld does not explicitly disclose a microprocessor and an operating system ("OS"), but asserts combining Miesterfeld with the microprocessor and Windows OS disclosed in Wong (Ex.1010) would be obvious. (Pet.23-24).

Petitioner's obviousness argument fails because Petitioner has not shown that a POSITA would have had any motivation to combine Miesterfeld and Wong, and, in fact, the two references are not truly in the same technical field. For example, Wong does not teach the storing of information for purposes of sharing, and, in fact, does not teach any memory functions beyond stating that the system includes both volatile and non-volatile memory and the statement, which was a key feature of Miesterfeld's design. (Ex.1010 at 7:3-9; Ex.2001 ¶91).

Further, although both Miesterfeld and Wong involve automotive systems, they are antagonistic to each other. Miesterfeld clearly states that his interest was to allow third party devices to have limited access to an automotive system. Thus, Miesterfeld states:

> third party manufacturers design devices which require vehicle data as input in order to operate the device or implement some additional feature on the vehicle.

(1:33-35). At the same time, Miesterfeld was concerned that "Third party systems introduce many issues which must be considered in order to design a suitable system." (1:41-42). Miesterfeld was particularly concerned about the security of the automotive systems upon access of a third party system:

> although it may be desirable to share data, safety and other considerations necessitate that the third party has limited access to the vehicle data bus so as to not interfere with operation of the vehicle.

(1:48-51). Thus,

> any command requested by the third party device should be arbitrated by the vehicle data bus in order to prevent the third party device from interfering with operation of the vehicle.

(1:52-54). Miesterfeld's stated objectives were, therefore, as follows:

> Thus, it is an object of the present invention to provide a gateway for enabling data exchange between vehicle systems and <u>third party</u> systems which may require such data.
>
> It is a further object of the present invention to provide a data exchange gateway to enable a <u>third party</u> device to implement selected commands on a vehicle system.

> It is yet a further object of the present invention to provide a data exchange gateway for enabling data exchange between a vehicle data bus and <u>an [third-party] intelligent vehicle transportation system data bus</u>.
>
> It is yet a further object of the present invention to provide a gateway including a common memory having addresses where each address is predetermined to store specific vehicle data information to commonize a data exchange protocol for various <u>third party</u> devices.
> ***
>
> It is yet a further object of the present invention to provide a firewall between a vehicle data bus and an intelligent transportation system data bus in order to maintain security of the vehicle data bus.

(1:61 – 2:19).

To meet the above goals, Miesterfeld designed a gateway which could interface between the VDB – i.e., a standard automotive bus – with the ITS bus, which provided a connection to third party add-ons:

> Devices 20, 22, referred to as ancillary devices, represent such add-on devices as were described in the background herein. Data exchange may occur between devices 20, 22 through ITS data bus 24.

(3:13-16).

In short, Miesterfeld designed his gateway to permit limited access between the automotive VDB and third party devices via an ITS bus, with the main focus being on security, which meant that the ITS bus would be highly restricted and firewalled from the VDB. (Miesterfeld at 2:18; Ex.2001 ¶97).

Further, Miesterfeld expressly designed a fast, low cost and simple solution that would meet those limited functions. (Ex.2001 ¶98; s*ee*, for example,

Miesterfeld at 9:46-67). For example, Miesterfeld suggested using a "HIP7030A2 surface mount package." (4:48-50). Exhibit 2008 is the datasheet for that HIP7030A2 microcontroller. It provides that the microcontroller had only 176 Bytes of RAM and 2110 Bytes of User ROM. The choice of microcontroller speaks eloquently to Miesterfeld's desire for low-cost, simplicity and minimal capabilities consistent with his goals. His system, including the algorithms he discloses, are dealing with operations at the bit level, where he is sequentially parsing each bit in each byte of a message. (*See*, for example, Ex.1009 at 7:28-60, 8:61-9:20). Miesterfeld is describing a low-cost embedded system, and Miesterfeld does not suggest that a more general-purpose solution would be desired, much less valuable. For example Miesterfeld never mentions the need to, or any benefit of providing APIs to support a variety of general-purpose applications. Thus, Miesterfeld created a limited gateway to efficiently provide a specific and limited function of providing restricted and limited exchange of data between an automotive VDB and third party devices with heavy emphasis on security and no intention of general sharing of data. (Ex.2001 ¶98).

Wong, on the other hand, is entirely different than Miesterfeld. Wong was seemingly intent on converting automotive controllers into mini computers with Windows operating systems. Such Windows computers would have come with

their expected share of Windows issues, but, whether good or bad, it was a very different concept than Miesterfeld. (Ex.2001 ¶99).

Further, Wong is dedicated to a highly functional system that does not appear interested in simplicity or cost, and does not appear to have any interest in any exchange of data even to the limited extent provided by Miesterfeld. (*See*, for example, Ex.1009 at 2:36-38, 7:51-60, etc.). Wong's system is a domain based automotive architecture implemented using general purpose computers. (Ex.2001 ¶100).

Given the directly opposing interests and goals of Miesterfeld and Wong, there is no rationale for a POSITA having any interest in combining Miesterfeld and Wong. The only reason a POSITA would look to Wong in implementing Miesterfeld would be to add a general-purpose microprocessor and an OS, but that would only be based on the hindsight of the '477 Patent claims. On the other hand, a POSITA who accepted Miesterfeld for what Miesterfeld had proposed and his goals, would not look to a general-purpose microprocessor and OS, and, thus, would never consider Wong. Petitioner has apparently chosen to combine Miesterfeld with Wong because the combination fit the claims of the '477 Patent. But a POSITA would not see no motivation to combine the very different goals and structures of the two. (Ex.2001 ¶101).

Petitioner's argument that a POSITA would implement Miesterfeld with Wong's Windows OS "to facilitate effective and safe communication of Miesterfeld's gateway with different control units and system of electronic devices on different vehicle networks for improved monitoring and controlling of vehicle functions, as taught by Wong," and that implementing Miesterfeld's gateway with a microprocessor and OS would provide 'a system design that is flexible and scaleable, with the capability to manage complex functions,' as further taught by Wong" (Pet.23-24) assumes erroneously that a POSITA would have those interests. But, even if a POSITA had an interest in developing a system that "is flexible and scaleable, with the capability to manage complex functions," the POSITA would certainly not consider Miesterfeld which was specifically designed to limit access by third party add-ons, and to <u>avoid</u> a system that "is flexible and scaleable, with the capability to manage complex functions." In effect, Petitioner proposes to combine Miesterfeld and Wong to build a system that contradicts Miesterfeld's stated interests and goals. (Ex.2001 ¶102).

"The obviousness inquiry does not merely ask whether a skilled artisan could combine the references, but instead asks whether 'they would have been motivated to do so.'" *Adidas AG v. Nike, Inc*., 963 F.3d 1355, 1359 (Fed. Cir. 2020); *InTouch Techs., Inc. v. VGO Commc'ns, Inc*., 751 F.3d 1327, 1352 (Fed. Cir. 2014). Petitioner was required to "present evidence and argument that a

person of ordinary skill would have been motivated" to combine Miesterfeld and Wong in a manner that satisfied the claim limitation and particularly the functional limitations of the claims. *ParkerVision, Inc. v. Qualcomm Inc*., 903 F.3d 1354, 1363 (Fed. Cir. 2018); *InTouch Techs., Inc. v. VGO Commc'ns, Inc*., 751 F.3d 1327, 1346–47 (Fed. Cir. 2014). Petitioner's arguments and explanations failed to do so because, although both Miesterfeld and Wong involve automotive systems, Miesterfeld and Wong have entirely different goals and share few concepts in their respective implementations.

Given the directly opposing interests and goals of Miesterfeld and Wong, the only reason a POSITA would look to Wong in implementing Miesterfeld would be to add a general-purpose microprocessor and an OS, but that would only be based on the hindsight of the '477 Patent claims. On the other hand, a POSITA who accepted Miesterfeld for what Miesterfeld had proposed and his goals, would not look to a general-purpose microprocessor and OS, and, thus, would never consider Wong. Petitioner has apparently chosen to combine Miesterfeld with Wong because the combination fit the claims of the '477 Patent. But a POSITA would not see any sense in the combination given the very different goals and structures of the two.

Dr. Madisetti's conclusory assertions are not adequate to demonstrate motivation. His assertion that combining Miesterfeld and Wong would be obvious

assumes without any support that adding Wong's Windows CE OS would render Miesterfeld more safe than Miesterfeld's existing system, where the VDB Interface controlled the ITS' ability to do anything. Dr. Madisetti's proposal that combining Miesterfeld with Wong would permit Miesterfeld to add "different control units and system of electronic devices on different vehicle networks" flies in the face of Miesterfeld's stated goal to avoid precisely those features. In short, Petitioner has presented only generic conclusory opinions of an expert that are no different than similar generic opinions were disregarded in earlier cases. Thus, in one case the Federal Circuit considered an expert's testimony that was of the same type as here:

> The motivation to combine would be because you wanted to build something better. You wanted a system that was more efficient, cheaper, or you wanted a system that had more features, makes it more attractive to your customers, because by combining these two things you could do something new that hadn't been able to do before.

ActiveVideo Networks, Inc. v. Verizon Commc'ns, Inc., 694 F.3d 1312, 1328 (Fed. Cir. 2012). The Federal Circuit dismissed this testimony because:

> This testimony is generic and bears no relation to any specific combination of prior art elements. It also fails to explain why a person of ordinary skill in the art would have combined elements from specific references in the way the claimed invention does.

(*id.*) The same principle was later reiterated in another case, where the Federal Circuit held that:

> In[prior] cases ..., we rejected obviousness determinations based on conclusory and unsupported expert testimony. We repeatedly expressed concerns that crediting such testimony risks allowing the

> challenger to use the challenged patent as a roadmap to reconstruct the claimed invention using disparate elements from the prior art—i.e., the impermissible ex post reasoning and hindsight bias that *KSR* warned against.

TQ Delta, LLC v. CISCO Sys., Inc., 942 F.3d 1352, 1361 (Fed. Cir. 2019).

Petitioner has not demonstrated that a POSITA would have been motivated to combine Miesterfeld with Wong. (Ex.2001 ¶103).

B. Limitations 1[d] and 1[e]

Petitioner admits that Miesterfeld does not disclose limitations 1[d] and 1[e], but proposes that a POSITA would combine Miesterfeld, Wong and Grattan "to facilitate efficient memory use of storage of files and database, in light of 'limited amounts of memory available to applications,' by, e.g., 'handl[ing] memory mapping,' allocat[ing] memory for data storage," and obtaining system, processor, and memory information and status, among other memory manager functions, as taught by Grattan." (Pet.31-32).

Petitioner's rationale constitutes mere conclusory words that entirely eviscerate Miesterfeld's goals and system. (Ex.2001 ¶106). Miesterfeld's goals are stated in his patent. He did not want the attributes that Petitioner seems intent on imposing on him. Rather, Miesterfeld desired that "the third party ha[ve] limited access to the vehicle data bus so as to not interfere with operation of the vehicle" (1:48-52) and that "any command requested by the third party device should be arbitrated by the vehicle data bus in order to prevent the third party

device from interfering with operation of the vehicle" (1:53-55). Miesterfeld did not want "to facilitate efficient memory use of storage of files," because he had already provided the specific memory structure that he wanted with the goal of providing a memory "where each address is predetermined to store specific vehicle data information" (2:6-9) and, very importantly, "to provide a firewall between a vehicle data bus and an intelligent transportation system data bus in order to maintain security of the vehicle data bus." (2:17-19). *See* Ex.2001 ¶106.

To protect the automobile systems, Miesterfeld prescribed a very tightly controlled system where the memory is "allocated in a predetermined fashion so that predetermined vehicle parameters occupy predetermined memory locations, referred to as mailboxes," and "only the specified data or command may be placed in that mailbox." (Ex.1009 at 3:26-27, 35-36; Ex.2001 ¶107). A key aspect of the system is that "VDB interface 62 examines data on VDB 48 to determine if it is pertinent to ITS data bus 56 and to determine the appropriate location in SPI RAM 64 to write the data," and only if the data is pertinent, then "VDB interface 62 writes its data to a selected, specific memory location." (4:11-17). VDB interface 62 not only controls what VDB posts into the memory for availability to the ITS bus, but the ITS bus accesses memory via SPI bus 66, which it shares with the VDB interface:

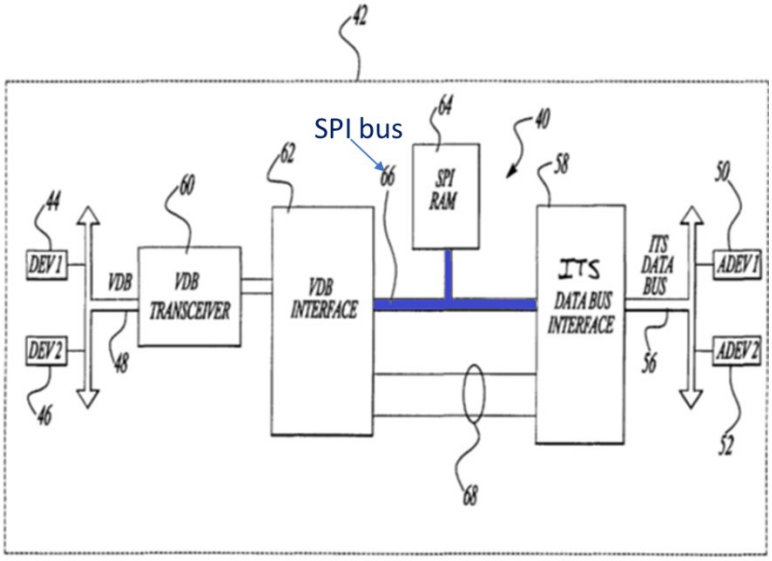

Fig-2

Miesterfeld states that "SPI bus 66 {blue color} interconnects VDB interface 62 and ITS data bus interface 58 with SPI RAM 64." (3:66-67). VDB interface 62 then controls what can be written to memory:

> VDB interface 62 is also responsible for insuring security of the data placed on VDB 48 by insuring that only appropriate data is written to SPI RAM 64. VDB interface 62 also insures security of VDB 48 by inspecting commands prior to placing any the command on VDB 48.

(4:26-31).

Miesterfeld requires that the VDB examine the data to determine "if it is pertinent to the ITS" before writing it into the SPI memory:

> In operation, VDB interface 62 controls data flow between VDB 48 and SPI RAM 64. In particular, VDB interface 62 examines data on VDB 48 to determine if it is pertinent to ITS data bus 56 and to determine the appropriate location in SPI RAM 64 to write the data.

(4:12-18).

In short, Miesterfeld created a system and gateway with a specific goal in mind, and achieved that goal by a careful selection of elements. Petitioner's argument that Miesterfeld should be modified by first adding a Windows CE operating system to operate the gateway, and then to modify that Windows CE program to add the memory elements from Grattan does not enhance Miesterfeld's system, but completely eviscerates the system that Miesterfeld had intended to build. Petitioner defeats Miesterfeld's clear purpose to control the data to which the ITS bus could be exposed and what the ITS bus could store in the gateway's memory. (Ex.2001 ¶110).

Combining Miesterfeld with Wong and Grattan to recreate Miesterfeld with the elements of limitation 1[e] defeat Miesterfeld's clearly stated purpose to tightly structure his memory and then limit access to that structured memory. Miesterfeld desired control and security over memory, and nothing that Wong and Grattan provided would support Miesterfeld's goals. Petitioner's arguments to combine Miesterfeld, Wong and Grattan defeat Miesterfeld's goal and means. That is not obviousness, but a wholesale rewriting of the prior art to do exactly what the Miesterfeld inventor had specifically intended to avoid. Petitioner's reasoning for its proposed combination is hindsight provided by the claims of the '477 patent, and then Petitioner selectively cobbles elements found in various unrelated prior art references in order to recreate a combination according to the claims of the '477

patent. (Ex.2001 ¶111).

In view of these teachings, a POSITA would not have been motivated to modify Miesterfeld to incorporate the elements of limitation 1[d] and 1[e]. *See ActiveVideo Networks* and *TQ Delta, supra.*

C. Limitation 1[f] followed by Limitations 1[g]-1[m]

Petitioner argues that limitation 1[f] is disclosed by a combination of Miesterfeld and Wong. But contrary to Petitioner's assumptions, Miesterfeld does not describe storing data in any persistent way. Nor does Miesterfeld mention any instructions executed by the system. Miesterfeld only describes "instructions" associated with commands that the system will send to connected devices on the network. (Miesterfeld 8:65; Ex.2001 ¶ 117).

Petitioner's argument has already been adequately analyzed and dissected in the October 1, 2021 decisions of the Board that considered this limitation under current law in the context of identical limitations in similar claims in a patent in the same family and in response to exactly the same evidence as Petitioner cites here. The Board stated:

> … Petitioner does not show sufficiently… that Miesterfeld, in combination with the other references, teaches or suggests {limitation 1[f]} together with limitations {1[g] through 1[m]} in the manner claimed. Petitioner asserts that Miesterfeld's SPI RAM 64, shown in Figure 2, corresponds to the claimed "non-transitory memory storage" and that "command requests" written to SPI RAM 64 by either the VDB interface or ITS data bus interface are "instructions" stored in the non-transitory memory storage and executed by the processor (i.e.,

> either the VDB interface or ITS data bus interface) when it queues a message for transmission. … However, the passages in Miesterfeld cited by Petitioner describe VDB interface 62 processing a command that was written by ITS data bus interface 58 to SPI RAM 64 for transmission onto the VDB 48 via VDB interface 62. See, e.g., Ex. {1009}, 7:17–21. The commands processed in this way are commands that are exchanged between the ITS data bus and the VDB via their respective interfaces connected to shared memory (i.e., SPI RAM 64). See, e.g., *id*. at code (57) ("The gateway includes a memory accessible by both a VDB interface and an ITS data bus interface so that data and commands may be shared between each respective bus through the shared memory."). They are not commands or instructions executed by a processor to carry out the steps in the flow chart of Figure 4, which Petitioner maps to the operations recited in limitations {1[h] – 1[m]}.

(Ex.2002 at 13-14; Ex.2003 at 13-15; Ex.2004 at 13-15).

Given that Miesterfeld was Petitioner's only support for limitation 1[f], which is necessary to also support limitations 1[g]-1[m], the failure of Miesterfeld to actually disclose the element means that none of limitations 1[f] through 1[m] are in the prior art.

D. Limitation 1[h]

To meet this limitation, Petitioner relies entirely on Miesterfeld's Figure 4 and associated description. (Pet.45-46). Miesterfeld, however, does not disclose this limitation, and, indeed, teaches something quite distant of limitation 1[h]. Thus no prior art cited by Petitioner teaches limitation 1[h].

Petitioner presents the following annotation of part of Miesterfeld's Fig. 4:

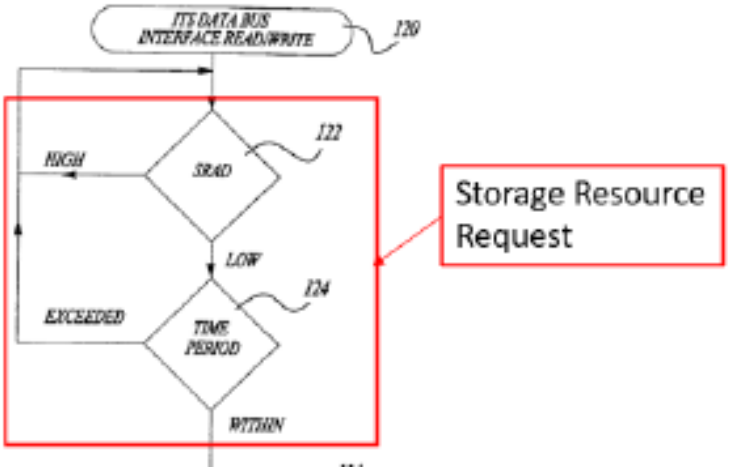

(Pet.45-46). Petitioner then argues that the "testing the SRAD signal line as shown at block 122" is a "storage resource request in connection with a storage resource (i.e., request to access memory, which is a storage resource)." (Pet.45-46).

Petitioner's reliance on Figure 4 is misplaced and its description of Figure 4 and the associated process is faulty. In fact, Figure 4 and what Petitioner terms the "attempts to access SPI RAM 64" is nothing more than a hardware handshake interlock that is shown in Figs. 2-3 and described in the associated text. Miesterfeld's Figure 4 does not show any "memory" that includes instructions to issue a storage request, much less "in response to the receipt of the information." (Ex.2001 ¶¶123-124).

Specifically, Fig. 4 "depicts a block diagram of the sequence for ITS data bus interface 62 reading/writing from/to SPI RAM 64." (Miesterfeld at 6:31-33). Fig. 4 depicts the steps for utilizing a hardware set-up with handshake lines 68a and 68b as shown in Miesterfeld Figs. 2, 3A and 3B:

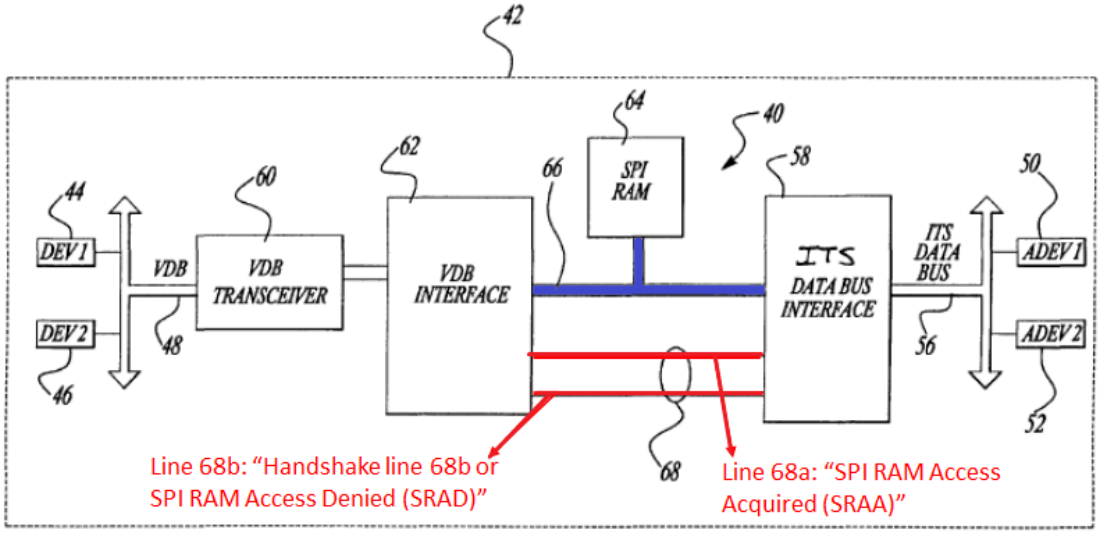
42
64
40
58
50
62
60
66
SPI RAM
44
DEV 1
VDB
VDB TRANSCEIVER
VDB INTERFACE
ITS DATA BUS INTERFACE
ITS DATA BUS
ADEV 1
DEV 2
48
56
ADEV 2
46
52
68
Line 68b: "Handshake line 68b or SPI RAM Access Denied (SRAD)"
Line 68a: "SPI RAM Access Acquired (SRAA)"

Fig-2

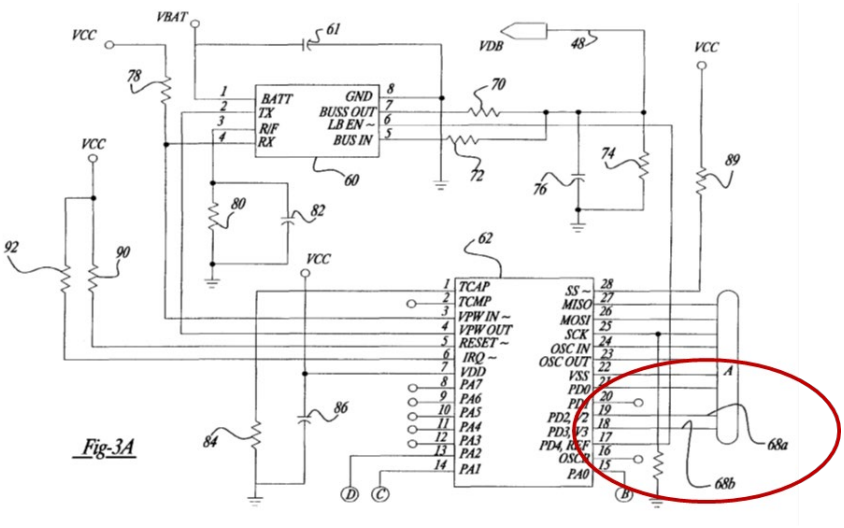
VBAT
VCC
61
VDB
48
VCC
78
BATT
TX
R/F
RX
GND
BUSS OUT
LB EN ~
BUS IN
70
72
74
76
89
60
80
82
92
90
62
TCAP
TCMP
VPW IN ~
VPW OUT
RESET ~
IRQ ~
VDD
PA7
PA6
PA5
PA4
PA3
PA2
PA1
SS ~
MISO
MOSI
SCK
OSC IN
OSC OUT
VSS
PD0
PD1
PD2, V2
PD3, V3
PD4, REF
OSCR
PA0
A
68a
68b
84
86
D
C
B

Fig-3A

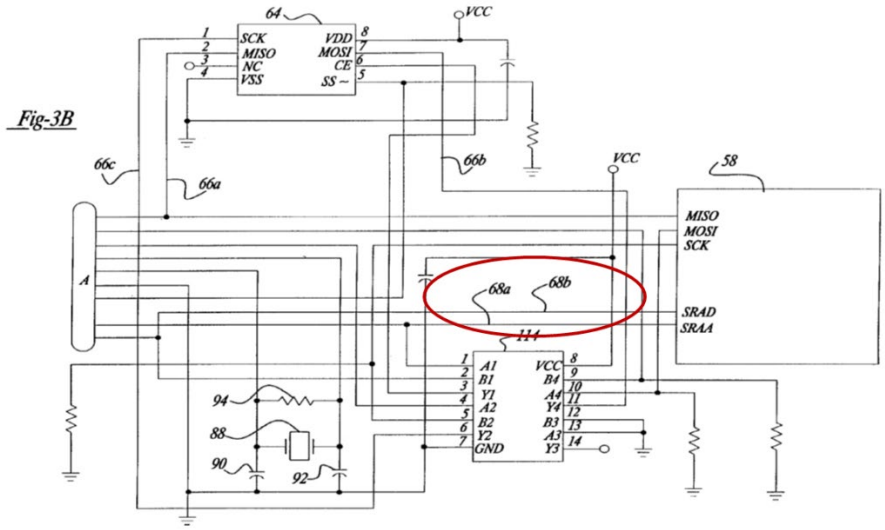

Miesterfeld's Handshake lines 68a and 68b are necessary to "coordinate" and "arbitrate" "access to SPI RAM 64." (Ex.1009 at 3:67-4:9; 5:32-36) Miesterfeld then describes the process shown in Fig. 4:

> When ITS data bus interface 58 attempts to access SPI RAM 64 such as for reading or writing ITS data bus interface 58 must first test the SRAD signal line as shown at block 122. If SRAD is high, the VDB interface 62 is accessing SPI RAM 64, and ITS data bus interface 58 must wait until SPI RAM 64 is available, and control returns to block 122. If SRAD is low, SPI RAM 64 is available. When ITS data bus interface 58 determines that SPI RAM 64 is available, ITS data bus interface 58 sets the SRAA signal line high, as shown at block 126.

(6:33-39).

Thus, Miesterfeld's system shown in Fig. 4 upon which Petitioner relies discloses only a hardware-based handshake interlock where the ITS and VDB interfaces/busses may either read or write without any request so long as the other interface/bus is not already occupying the memory – i.e., SRAD is not "high."

Miesterfeld does not disclose any "request," but only a hardware lock that prevents access if the memory is currently in use. (Ex.2001 ¶¶124-127).

Testing the state of a signal line is not a request under any reasonable construction of "issue a storage resource request." Dr. Miller provided a useful analogy of a drawbridge. A normal drawbridge is kept closed most of the time so that cars may pass freely over it. If a vessel needs to pass through the waterway blocked by the bridge the captain must request that the bridge be opened. In Miesterfeld's system the corresponding analogy would be a bridge that was closed only when cars needed to pass over it, but would open when there was no vehicle traffic. In this scenario, the captain would not make any request (because there is no one to make such a request to), but instead would sit and wait until the traffic eased and the bridge opened. In one case the bridge is opened because of the request. In the other the bridge would automatically open when there were no cars crossing it. (Ex.2001 ¶128).

Even if it were accepted that checking "[i]f SRAD is high" is a "request," Petitioner has still failed to show that Miesterfeld disclosed the limitation. The claims require that the "request" be "in response to the receipt of the information." Petitioner points to the statement in Miesterfeld that "When ITS data bus interface 58 attempts to access SPI RAM 64 such as for reading or writing …." (6:33-35).

But this shows only that the ITS bus will attempt access, and not that the access is attempted "in response to the receipt of the information." (Ex.2001 ¶129).

Given that Petitioner relied solely on Miesterfeld to meet this limitation and Miesterfeld does not disclose the limitation, Petitioner has failed to identify any prior art showing the limitation.

E. Limitations 1[i] through 1[l]

Petitioner has not shown limitations 1[i] through 1[l] are found in Miesterfeld either, as they are all dependent on limitation 1[h], which, as noted above, is entirely missing from the Miesterfeld.

F. Limitation 1[m]

Limitation 1[m] requires that the memory include code that data placed into the storage resource by a network utilizing one protocol be shared with a second network selected from FlexRay, CAN and LIN which utilized a different protocol than the first network. Petitioner's obvkiousness argument fails for three independent reasons.

To support finding the limitation "utilizing a network protocol different from a protocol of the first physical network" in the prior art, Petitioner relies entirely on "Wense, 11; Miesterfeld, 1:13-30, 3:2-8, 8:66-9:1; Ex-1047, ¶¶31, 40, 48; Ex-1052, 1:27-32, 3:49-57." (Pet.56-57). The argument fails.

Wense Discloses Only Individual Busses Used For Specific Purposes

Wense does not address the sharing of data between different networks, much less between networks utilizing different protocols. "Wense 11" merely identifies several known automobile busses without ever suggesting an ECU coupled to multiple networks:

> Several multiplex protocols have established in the car and each of the protocols has its specific domain. Most popular of these protocols is CAN with its domains as engine control network and main control network in the body control area. MOST, D^2B and Fire Wire are the top candidates in the area of Infotainment. Time Triggered Protocols, such as TTP, Flexray, and Byteflight are the preferred communication carriers for safety control systems, such as braking and steering. In the low end communication area LIN has become the top candidate. Typical applications for LIN are in the area of cost critical distributed body electronics where the performance and versatility of CAN is not required.

(Wense 11).

The only relevant take-away from Wense is really that automobiles utilize different networks, with each network having a preferred domain. (Ex.2001 ¶140).

Miesterfeld Does Not Disclose Sharing Data Between Different Protocols

Petitioner's citation to "Miesterfeld, 1:13-30, 3:2-8, 8:66-9:1" also fails. Miesterfeld at 1:13-30 states nothing more than that manufacturers utilize multiple electronic systems in automobiles with specific systems for different uses or domains. (Ex.2001 ¶141). Miesterfeld adds the cryptic statement that designers "seek to facilitate data exchange within each respective control system and,

optionally, between respective control systems," but that is not a suggestion for exchange of data between systems having different protocols, much less of a single ECU storing and sharing of data between networks having different protocols. Indeed, Miesterfeld's last sentence of the section, "One approach to facilitating data exchange is the use of vehicle data buses to facilitate such data exchange," suggests that Miesterfeld was referring to communizing a data bus, rather than considering an ECU for such interchange. (Ex.2001 ¶141).

In any event, the remainder of his patent was unrelated to the above section, because Miesterfeld continued:

> In addition to the above-discussed vehicle systems, third party manufacturers design devices which require vehicle data as input in order to operate the device or implement some additional feature on the vehicle.

(1:31-34). The remainder of Miesterfeld was then his disclosure of a system to permit the interchange of data with third party systems "which require vehicle data as input in order to operate the device or implement some additional feature on the vehicle." By Miesterfeld's own words, his disclosed system had nothing to do with his discussion at 1:13-30. (Ex.2001 ¶142).

Petitioner's next citation, Miesterfeld at 3:2-8, states that vehicle data bus VDB 14 provides a mechanism for data exchange between one or plurality of devices. But that says only that a given vehicle data bus will have serve multiple

devices on that bus. The section does not address sharing of information between networks, much less networks with different protocols. (Ex.2001 ¶143).

Petitioner's final citation, Miesterfeld at 8:66-9:1, states "For example, Command bit 1 of message register 140, the most significant bit, may correspond to a request for a door lock command." Petitioner does not explain how this Miesterfeld statement relates to limitation 1[m], and it does not. (Ex.2001 ¶144).

In short, Petitioner has not pointed to anything in Miesterfeld that supports the limitation "utilizing a network protocol different from a protocol of the first physical network." (Ex.2001 ¶145).

Reaching beyond Petitioner's specific contentions and considering Miesterfeld as a whole, it is useful to address Petitioner's implicit suggestion that a POSITA would have been motivated to substitute Miesterfeld's VDB and ITS busses with automotive busses such as the FlexRay, CAN or LIN busses described in Wense. As noted earlier, Wense points out that FlexRay, CAN and LIN are automotive busses in the sense that they communicate information necessary for the normal functioning of an automobile. Each bus serves certain uses or domains, and each utilizes a different protocol than the other two. (Wense 11; Ex.2001 ¶¶139-40).

Petitioner's argument that a POSITA would have been motivated to combine Miesterfeld with Wense by substituting the VDB and ITS buses in Miesterfeld

with the individual automotive FlexRay, CAN and LIN busses discussed in Wense fails for three independent reasons.

No Motivation To Substitute Miesterfeld's ITS Bus With Automotive Bus

First, Miesterfeld's gateway includes the ITS bus, which Miesterfeld states can be optionally substituted with D^2B, USB, IDB, Firewall "and the like" busses. (9:55-57). All these will be collectively referred to as the "ITS" bus. As discussed earlier in connection with limitation 1[a], the ITS bus's purpose was to provide an interface to third party devices "which require vehicle data as input in order to operate the device or implement some additional feature on the vehicle," and the entire point of Miesterfeld's system was to accommodate such third party add-ons. (Miesterfeld 1:31-34, 1:62-2:19; Ex.2001 at ¶¶95-102, 148).

Miesterfeld does not indicate that the ITS bus was intended to be similar to the VDB bus or otherwise serve the functions of a VDB bus. Indeed, if Miesterfeld had intended to provide a gateway for two automotive busses, Miesterfeld would have disclosed a gateway with two VDB busses, rather than a VDB bus and what Miesterfeld termed a third party add-on ITS bus. (Ex.2001 ¶149).

Petitioner has not pointed to any similarity between the VDB bus and/or the FlexRay, CAN and LIN busses on the one hand, and any of the ITS busses on the other hand, and there really are not. VDB and FlexRay, CAN and LIN are entirely

different animals than ITS. As Wense shows, FlexRay, CAN and LIN are regular automotive busses, each utilized for specific purposes and automotive domains. (Wense 11). Miesterfeld's ITS busses are not that. For example, D^2B refers to the Domestic Digital Bus which was a data communications standard used in support of audio video products. IDB was a proposed standard for a gateway for interfacing third party devices with an automotive system. USB presumably refers to the Universal Serial Bus, which is well-known and used. Thus, even accepting that the FlexRay, CAN and LIN networks were individually utilized in automobiles, Petitioner has not shown any similarity between the types of communications handled by ITS versus those handled by FlexRay, CAN or LIN, and, thus, Petitioner has not presented any motivation for a POSITA to substitute any of the ITS, with FlexRay, CAN or LIN. (Ex.2001 ¶150).

Nor has Petitioner considered the fact that Miesterfeld ITS busses were all *third party* systems providing add-on benefits. (Ex.2001 ¶¶95-102, 151). Because these were third party add-ons, Miesterfeld designed his system to prevent the third party systems from having general access to the automobile's busses or otherwise potentially interfering with the automotive operations, including designing a "firewall" between the third party add-ons and the VDB. (2:18). Miesterfeld was specifically designed to limit and control exchange of data between an automotive bus and a third party bus. (Ex.2001 ¶¶95-102, 151).

Given the significant differences between the VDB/FlexRay/CAN/LIN busses on the one hand and the third party ITS busses on the other hand, there is no rational reason why any POSITA would have used Miesterfeld's system, which was specifically designed as a gateway between a VDB bus and a third party ITS bus, to act as a gateway between two VDB-type busses. (Ex.2001 ¶152).

Nevertheless, Petitioner argues that:

> For similar reasons discussed above in claim 1[g], it would have been obvious to a POSITA to implement the second physical network, like the first network, from the group consisting of FlexRay, CAN, and LIN. Ex-1004, ¶110. And it would have been obvious to enable data exchange using a network protocol from the ITS data bus 24 different from the VDB 14 to account for and facilitate vehicle communication and control across different groups of devices and vehicle systems.

(Pet.56-57).

Thus the only motivation suggested by Petitioner for substituting Miesterfeld's ITS bus with a FlexRay, CAN or LIN automotive bus is "to account for and facilitate vehicle communication and control across different groups of devices and vehicle systems." But that is directly opposite of what Miesterfeld intended when he designed his system to accommodate, but also protect from, third party add-on busses. Miesterfeld did not suggest any interest or desire "to account for and facilitate vehicle communication and control across different groups of devices and vehicle systems." In fact, Petitioner fails to show any prior art expressing such an interest. (Ex.2001 ¶154).

While Petitioner does not cite any support for alleging motivation to substitute the ITS bus with FlexRay, CAN or LIN, Petitioner's own record supports the opposite conclusion. Specifically, the record shows that different automotive systems such FlexRay, CAN and LIN each had their areas of strength and operated in different automotive domains. Thus, the section of Wense relied upon by Petitioner actually states as follows:

> Most popular of these protocols is CAN with its domains as engine control network and main control network in the body control area. MOST, D^2B and Fire Wire are the top candidates in the area of Infotainment. Time Triggered Protocols, such as TTP, Flexray, and Byteflight are the preferred communication carriers for safety control systems, such as braking and steering. In the low end communication area LIN has become the top candidate. Typical applications for LIN are in the area of cost critical distributed body electronics where the performance and versatility of CAN is not required.

(Ex1013 at 11).

Thus, Wense provides that each automotive bus had its own ECU, and nothing suggested an ECU with multi-network, multi-protocol capabilities. There is nothing in Wense's statement that would inherently motivate a POSITA to combine a single ECU with multiple networks and provide for sharing of data stored in the ECU with all the different networks. But the fact that Wense showed FlexRay, CAN and LIN as individual networks and never suggested a common interface or exchange between them highlighted that the art viewed that each of the automotive bus domains were individual systems which should stay separate and

independent. Wense was obviously a POSITA and he knew that FlexRay, CAN and LIN were all used in automobiles, but he never suggested combining the busses under a common interface or sharing data between the different bus systems. (Ex.2001 ¶156).

In short, the elements of limitation 1[m] are not found in the prior art. To the extent such elements were found, the only apparent motivation for a POSITA to design an ECU with capabilities of limitation 1[m] or the other limitations of the '477 Patent claims would be the hindsight derived from using the '477 Patent itself as template for plucking and reconstituting elements from the prior art. (Ex.2001 ¶157).

Miesterfeld Is Consistent With Only a Single Protocol

Reaching, again, beyond Petitioner's specific contentions and considering Miesterfeld as a whole, Petitioner's second fatal failing is its implicit erroneous suggestion that Miesterfeld's VDB and ITS busses utilize different protocols.

With the benefit of the hindsight afforded by the '477 Patent, it is possible to read the VDB and ITS as operating under different protocols. However, without the hindsight benefit of the '477 Patent, a POSITA would see something different. Miesterfeld does not say that the VDB and ITS data busses utilize different protocols, never proposes any interchange of data between networks utilizing

different protocols and does not enable any exchange of stored information between different networks utilizing different protocols. (Ex.2001 ¶159).

Contrary to Petitioner's assumption, Miesterfeld's Figure 2 shows:

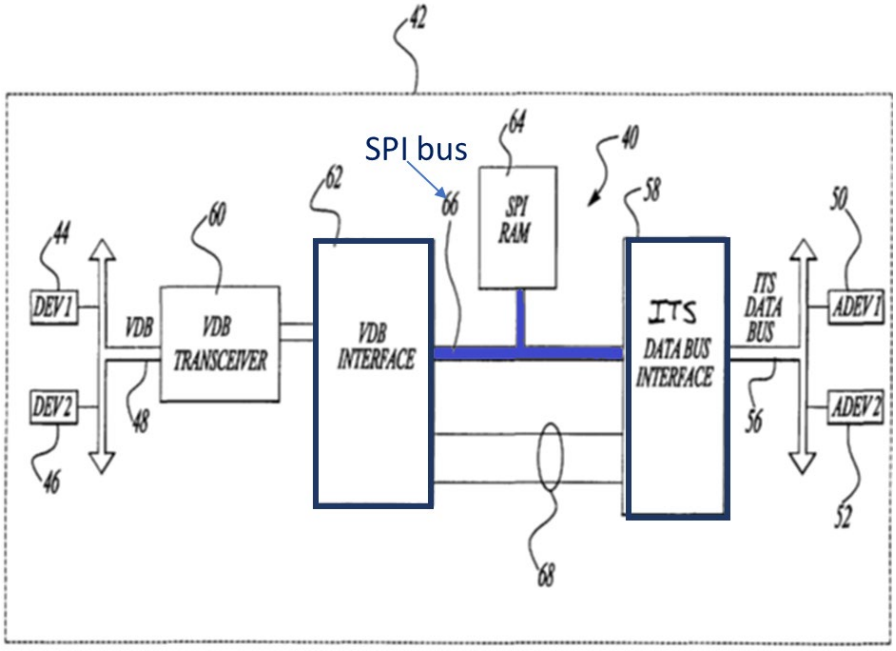

Fig-2

Miesterfeld states that "SPI bus 66 {blue color} interconnects VDB interface 62 and ITS data bus interface 58 with SPI RAM 64." (Miesterfeld at 3:65-67). Although it is difficult to fully understand what Miesterfeld is saying, it is plain that both the VDB and ITS interfaces connect to and share the same SPI bus 66. One alternative scenario is that the two interfaces convert signals to a common "SPI bus" protocol. The other alternative is that both VDB and ITS interfaces and the SPI bus share the same protocol. Given that Miesterfeld does not say that the

VDB or ITS interfaces convert any protocol, a POSITA is likely to assume that Miesterfeld intended the latter alternative. (Ex.2001 ¶¶161-162).

The conclusion that both VDB and ITS utilize the same protocol is independently supported by Miesterfeld's description of how the data that the VDB interface posts into memory is conveyed to the ITS bus:

> If a non-zero message register bit and corresponding valid command requests are found, control passes to block 164 where VDB interface 62 prepares the appropriate VDB message for transmission.

(8:35-38). If this data is being transmitted along a bus, the signaling rate is also important. If signals are transmitted every 0.1ns under one protocol, for example, but they are transmitted every 0.2ns under a different protocol, the second protocol could miss half the signals if reading from a bus that is currently occupied by the first protocol. (Ex.2001 ¶163).

That Miesterfeld contemplates that all messages are in the VDB format is further confirmed by Miesterfeld's Figure 6. "FIG. 6 is flow diagram of the method for processing commands for transmission on the vehicle data bus" and shows "processing commands stored in SPI RAM 64." (2:61-62 and 7:61-62). Fig. 6 shows processing of only VDB protocol commands and nothing that converts any VDB signals to a different protocol. (Ex.2001 ¶164).

Petitioner elsewhere implicitly confirms the above analysis. Specifically, limitation 1[q] requires "replicating the packet unit data obtained from the first

physical network by composing another message configured to be communicated using the different protocol of the second physical network." Petitioner cites Miesterfeld Fig. 6 and text at 8:35-38 ("explaining that once 'a non-zero message register bit and corresponding valid command requests are found, control passes to block 164 where the VDB interface 62 prepares the appropriate VDB message for transmission')" to support Petitioner's argument that Miesterfeld discloses this limitation. (Ex.1004 ¶121). Given that Miesterfeld discloses only VDB protocol transmissions, Petitioner implicitly confirms that Miesterfeld's only disclosure of exchanging data is by the system that uses VDB's protocol for the signaling, the frames and the message headers. This point is further supported by the fact that Miesterfeld utilizes a simple memory, whose description seems to require that the data types be the same between the two networks because there is no way to convey any metadata about the data. (Ex.2001 ¶165).

The conclusion that VDB and ITS operate with the same protocol is further supported by the fact that Miesterfeld does not describe any method for communicating data to a memory where different protocols are involved. For example, Miesterfeld states, with respect to Figure 1, that

> With respect to the present invention, it is desirable to provide a data exchange system between VDB 14 and ITS data bus 24. To effect such an exchange, a vehicle data bus (VDB) interface 26 reads and writes data from VDB 14. VDB interface 26 enables the exchange of data between memory 30 and VDB 14. Similarly, ITS data bus

> interface 28 enables data exchange between memory 30 and ITS data bus 24.

(3:17-24). The above brief description strongly implies, if not requires, the conclusion that the VDB 14 and ITS data bus 24 must utilize the same protocol because Miesterfeld says nothing more about how the communications or exchange of data could take place if two different protocols were involved. (Ex.2001 ¶166).

Neither Miesterfeld Nor Any Other Cited Art Enables Sharing Data Between Different Protocols

The third fatal deficiency is that Petitioner's obviousness argument suffers from lack of enablement in the prior art. The same lack of enablement applies to claim limitations 1[m], 1[n], 1[p] and 1[q], and equivalent limitations found in all the other claims. All these limitations require that the ECU include instructions that the information stored by a first automotive network (selected from FlexRay, CAN and LIN) be shared with second automotive network that utilizes a different protocol (selected from FlexRay, CAN and LIN). Limitation 1[n], which is also found directly or through dependency in claims 2-23, 28 and 29 further requires that the ECU include interfaces for all three of the FlexRay, CAN and LIN networks, and, thus, the ECU must include instructions that the stored information is shared amongst all three automotive FlexRay, CAN and LIN networks, all of which utilize a different protocol. (Ex.2001 ¶146).

Other than citing Wense, Ex.1047 and Ex.1052 for the proposition that the FlexRay, CAN and LIN automotive networks were known and Nikklason for interfacing multiple devices on a single bus, Petitioner has cited only Miesterfeld to support claim limitations 1[m], 1[n], 1[p] and 1[q]. (Pet.54-60, 63-66). But Miesterfeld does not show an ECU with three interfaces much less sharing of information amongst three different automotive networks using different protocols.

"To render a claim obvious, the prior art, taken as a whole, must enable a skilled artisan to make and use the claimed invention." *Raytheon Techs. Corp. v. Gen. Elec. Co*., 993 F.3d 1374, 1380 (Fed. Cir. 2021).

Dr. Miller has pointed out that it would not have been a trivial matter to design an ECU to store and interchange data with three or more interfaces with different protocols. (Ex.2001 ¶¶168-169). Yet, there is no indication in any of Petitioner's cited prior art that such a concept was even contemplated, much less that the prior art enabled an ECU with three interfaces much less sharing of information amongst three different automotive networks using different protocols. Petitioner's reliance on Miesterfeld required Petitioner to show that Miesterfeld enabled limitations 1[m], 1[n], 1[p] and 1[q]. *Raytheon Techs., supra*.

Petitioner has not even attempted to do so, and would not have been able to succeed in any event. (Ex.2001 ¶¶168-169).

Petitioner's Unexplained Citation to Ex.1047 and Ex.1052

Finally, Patent Owner notes that Petitioner included citations to "Ex-1047, ¶¶31, 40, 48" and "Ex-1052, 1:27-32, 3:49-57" in arguing obviousness of this limitation 1[m]. However, Petitioner does not discuss the Exhibits, and neither Exhibit is referenced in any of the six grounds that formed the Petition. Petitioner may not rely on Ex.1047 or Ex.102 to support the obviousness of this limitation. Petitioner has not cited either exhibit as prior art and has not otherwise explained their significance. In an IPR, "the petitioner's contentions ... define the scope of the litigation all the way from institution through to conclusion." *SAS Inst., Inc. v. Iancu*, 138 S. Ct. 1348, 1357 (2018); *Fanduel, Inc. v. Interactive Games LLC*, 966 F.3d 1334, 1342 (Fed. Cir. 2020). Here, Petitioner has not contended for any significance relative to Exs. 1047 and 1052 beyond the agreed proposition, and, thus, the exhibits cannot be considered for any purpose. [2]

G. Limitation 1[n]

The plain language of this limitation requires that the ECU include three separate interfaces for each of FlexRay, CAN and LIN, including the required individual network communication bus controller and network communication bus driver for each of the three networks.

Petitioner's entire discussion on this point is the conclusory assertion that:

> Like with the communication protocols of the first and second VDB 14 and ITS data bus 24 networks, discussed above in claim 1[g] and

> 1[m], it would have been obvious to a POSITA to implement Miesterfeld's VDB interface 26 and the ITS data bus interface 28 to communicate with each of FlexRay, CAN, and LIN. Wense, 11; Miesterfeld, 1:13-30, 3:2-8, 8:66-9:1; Ex-1047, ¶¶31, 40, 48; Ex-1052, 1:27-32, 3:49-57. Ex-1004, ¶112. And it would have been obvious to include interfaces for all three of FlexRay, CAN, and LIN because Miesterfeld contemplates that a vehicle may have three or more systems needing to communicate with each other, and a vehicle may have all three of FlexRay, CAN, and LIN networks for controlling different groups of devices and vehicle systems. Miesterfeld, 1:13-30, 3:2-8, 8:66-9:1 (describing engine and transmission, vehicle impact, and door lock networks); Wense, 11. Ex-1004, ¶112.

(Pet.58-59).

Petitioner's arguments fail for multiple reasons. First, as previously discussed, Wense discloses individual automotive busses and teaches that each bus has its specific uses and domains, and pointedly does not suggest an ECU that interfaces with more than such bus and, if anything, implies that there is no reason to have an ECU with interfaces to multiple networks with different protocols. (Ex.2001 ¶¶139-140, 150, 155-156, 174). Thus, Wense does not assist Petitioner.

---

[2] Petitioner had earlier cited the two exhibits with a parenthetical in arguing that "a vehicle communication system can have different vehicle data busses for controlling different groups of devices and vehicle systems…." (Petition at 44-45). Patent Owner agrees that automotive companies utilized different networks, and, in particular, FlexRay, CAN and LIN networks, in automobiles with each network being designed for "controlling different groups of devices and vehicle systems." In view of the parties' agreement for the cited proposition, the reference to Ex.1047 and Ex.1052 is a moot point for that proposition.

Petitioner again also cites to "Ex-1047, ¶¶31, 40, 48" and "Ex-1052, 1:27-32, 3:49-57," but, as noted earlier (p. 55, *supra*), Petitioner has not presented anything to consider in reference to these exhibits, and, even if they were considered, they do not support obviousness. (Ex.2001 ¶175).

Thus Petitioner is left to again rely on "Miesterfeld, 1:13-30, 3:2-8, 8:66-9:1." These sections of Miesterfeld were previously analyzed. (Ex.2001 ¶¶141-145; pp. 42-44, *supra*). Nothing in these sections is relevant to an ECU with interfaces to automotive networks, much less an ECU with interfaces to three different networks, and certainly nothing that would hint at an ECU with interfaces to all three of FlexRay, CAN and LIN. (*id.*)

Even if there was any prior art that could be combined to meet this limitation, Petitioner has not shown any motivation to do so. Prior analysis at pp. 23-30, *supra*, is equally pertinent here. Petitioner again seems to argue that knowledge that an automobile includes multiple different buses such as the FlexRay, CAN and LIN busses somehow automatically motivates a POSITA to attach the multiple standard busses to a single ECU. That is incorrect. As I previously noted, a POSITA knew that each automobile network was designed for specific purposes and each of the FlexRay, CAN and LIN networks had their areas of strength, and nothing in Wense or other cited art motivated a POSITA to

combine an ECU with interfaces to all three of FlexRay, CAN and LIN. (Ex.2001 ¶¶139-140, 150, 155-156, 178; Wense Ex.1013 at 11)

Miesterfeld also does not support the obviousness of limitation 1[n]. preliminarily, Miesterfeld does not disclose FlexRay, CAN or LIN, and does not disclose a system with three different networks in communication with a single ECU. Indeed, Miesterfeld's memory is designed for at most two networks. Thus, Miesterfeld provides a memory structure that is mapped for each of the VDB and ITS networks. (Ex.2001 ¶179).

Expanding Miesterfeld's approach to a system with more than two networks would immediately cause the gateway to suffer from the N*(N-1) inefficiency problem described above. Specifically, the interface would need to have information about the "pertinence" of each data type for each other network, and if there were M data types for each network, then you would have $M^2N(N-1)$ examinations to do before writing the data to the memory, which would be on the order of M^2N^2, which is polynomial with respect to two different variables. In the case of Miesterfeld's system a three-network system would be six times more complex than the two-network system described. (Ex.2001 ¶180).

Further, Miesterfeld requires VDB Interface 62 and ITS Interface 58 to be interconnected by a "plurality of handshake lines 68 … so that handshake signals may be exchanged therebetween to coordinate access to SPI RAM 64." (3:67-4:3).

Miesterfeld later again reinforces this as follows: "VDB interface 62 also coordinates read/write functions with ITS data bus interface 58 through a handshake procedure in order to avoid collisions between read/write activities of the respective vehicle data bus interface 62 and ITS data bus interface 58." (4:22-23). Ex.2001 ¶¶121-127, 181.

Petitioner has not demonstrated how Miesterfeld's hardware handshake interlock system could be made to with more than two networks. (Ex.2001 ¶182).

As to the remaining portion of limitation 1[n], Petitioners cites a fourth reference, Nikklason (Ex.1014), for the proposition that it was well knows that an interface would include "a corresponding network communication bus controller including a corresponding network communication bus driver." (Pet.59). Nikklason is not germane to the '477 Patent. Nikklason describes that the inputs to a CAN bus may comprise a control unit, a bus controller, bus driver, memory unit and an input signal controller. All the components share the common CAN protocol, and all inputs are to a single bus. Limitation 1[*n*], on the other hand, requires that each of the three busses interface with a single ECU, with an individual and separate interface comprising a corresponding network communication bus controller including a corresponding network communication bus driver for each of the three busses, each of which utilizes a different protocol. Nothing in Nikklason relates to this limitation 1[*n*] at least because of Nikklason

requires a single protocol for all components, while the limitation requires different protocols between all the components. (Ex.2001 ¶183).

Petitioner states that "I note that Nikklason further appreciates that "[c]learly, other bus types can be employed." (Ex.1004 at ¶114). The cited statement from Nikklason is unrelated to the limitation and does not support Petitioner's conclusion. Nikklason had disclosed a CAN bus and at the cited passage merely indicated that his system could be used with other busses. (Ex.1014 at 8) ("Clearly, other bus types can be employed, however, the CAN-bus is preferred because of its standardization and extend of use."). Nikklason does not disclose any ECU with multiple different network interfaces. (Ex.2001 ¶184).

Petitioner then concludes without any further analysis that "it would have been obvious to a POSITA to implement Miesterfeld's system such that each of the FlexRay, CAN, and LIN interfaces include a corresponding network communication bus controller including a corresponding network communication bus driver, as taught by Nikklason." (Ex.1004 at ¶114) But, as already noted, Miesterfeld does not teach an ECU having the ability to communicate with networks that utilize different protocols, and Nikklason involves a dingle bus architecture, and, thus, a single protocol. Thus Petitioner seems to be adding 0 + 0 and getting a 2. (Ex.2001 ¶185).

H. Limitation 1[p]

Petitioner essentially incorporates its arguments as to limitation 1[m]. (Pet.63-64). Patent owner equally incorporates its response.

I. Limitation 1[q]

Petitioner relies solely on Miesterfeld to disclose limitation 1[q] and does on the basis that Miesterfeld discloses that VDB and ITS operate on different protocols. (Ex.1004 ¶¶120-121). Yet, as detailed previously, Miesterfeld's disclosure is consistent with both VDB and ITS operating on the same protocol as it is otherwise not apparent how Miesterfeld's disclosed gateway could function.

Given that Petitioner's argument as to limitation 1[q] is founded on a plain error, there is nothing more that need to be said as to this limitation.

***

With respect to all the challenged claim limitations considered above, it is plain that some elements are entirely missing in the prior art. Petitioner's allegations that the missing elements are simply a matter that would have been obvious to a POSITA lacks any support in the prior art and are simply an assertion that "the invention is obvious." Here, the inventors discovered the benefits that would arise if ECUs could permit interchange of data between at least three networks even when each operated under a different protocol. Then, the inventors figured out a way to achieve that. Even if individual elements of that invention

were in the prior art, all such elements had to be re-purposed to achieve the desired ECU architecture.

Petitioner has not shown any ECU in the prior art with interfaces to all three FlexRay, CAN and LIN, or even two of them. Nor had Petitioner shown any prior art recognizing the benefit of such an ECU, much less prior art that enabled such a solution. Instead, Petitioner asserts that various combinations of prior art could have been made by combining various bits-and-pieces from various disparate sources, but, even then, Petitioner has to argue that "it would be obvious" to combine these elements and have them perform functions that they had never performed in the prior art. The only justification are the boilerplate conclusions of obviousness based not on anything stated in the prior art, and plainly based on the hindsight and the contrived motivations that reflect the perfect hindsight gleaned from the '477 Patent. This is not obviousness. *KSR Int'l Co. v. Teleflex Inc.*, 550 U.S. 398, 421 (2007) ("A factfinder should be aware, of course, of the distortion caused by hindsight bias and must be cautious of arguments reliant upon ex post reasoning"); *Orexo AB v. Actavis Elizabeth LLC*, 903 F.3d 1265, 1271 (Fed. Cir. 2018); *Interconnect Planning Corp. v. Feil*, 774 F.2d 1132, 1138 (Fed. Cir. 1985) ("The invention must be viewed not with the blueprint drawn by the inventor, but in the state of the art that existed at the time. The invention must be evaluated not

through the eyes of the inventor, who may have been of exceptional skill, but as by one of 'ordinary skill'").

b. Claim 2

Petitioner cites and relies upon its proposed construction of "bulletin board." Petitioner's construction of the term and the limitation are faulty, and Petitioner has not made any argument under the correct construction of the term. (pp. 16-18, *supra*).

c. Claim 3

Petitioner relies solely on Miesterfeld to meet this limitation, and argues that Miesterfeld discloses a bulletin board, and, thus, discloses the limitation of claim 3 inherently. (Pet.67-68). Miesterfeld discloses the limitation of claim 2. Ex.2001 ¶¶48-57, 197. Thus, Petitioner has failed to show that Miesterfeld discloses this limitation for that reason alone.

However, there is yet a more fundamental deficiency in Petitioner's argument. Petitioner ignores that claim 3 is dependent on claim 1 which requires that at least the three networks FlexRay, CAN and LIN be interfacing with the memory and be able to store information and share the stored information. Thus claim 3 requires that the complexity of the bulletin board grows linearly with at least three networks. Yet, Petitioner failed to consider that fact, and, thus, failed to show that this limitation is in the prior art. Petitioner has not shown that

Miesterfeld's memory was such that its complexity would grow linearly with at least three networks. (Ex.2001 ¶198).

Contrary to Petitioner's assertion, the '477 Patent does not say that a bulletin board automatically includes the limitation of claim 3. The '477 Patent refers to the bulletin board approach disclosed in the specification. The complexity of a bulletin board does not inherently or necessarily increase linearly. It is the entire system of memory management and, in this case, the claimed method of providing data that can be stored and accessed by the different networks that provide for the ability to limit the complexity of the bulletin board, as opposed to a bulletin board whose complexity grows as N*(N-1) , which is polynomial and not linear. (Ex.2001 ¶199).

Indeed, when Miesterfeld's description of his two-network system is considered as a whole, it is plain that Miesterfeld's purported bulletin board would NOT scale linearly with additional networks. First, Miesterfeld only describes linking two networks, and does not provide any hint that one might connect more than two, so any discussion of complexity scaling is purely speculative. Miesterfeld only describes one level of complexity and that is of a two-network system. (Ex.2001 ¶200).

Second, Miesterfeld describes that, for example the VDB interface receives a message from the VDB, and determines if that message is pertinent to the IDB:

> In operation, VDB interface 62 controls data flow between VDB 48 and SPI RAM 64. In particular, VDB interface 62 examines data on VDB 48 to determine if it is pertinent to ITS data bus 56 and to determine the appropriate location in SPI RAM 64 to write the data.

(4:13-15). This means that the VDB interface must know every data element type that may be pertinent to the IDB. If it were assumed, *arguendo*, that Miesterfeld did support multiple networks – or N networks, and Miesterfeld was accepted for what he says, Miesterfeld's VDB needs to know about the data types that are "pertinent" to every other network. That means it must have some sort of cross reference table that has "pertinence" information for all of the data types for each of the N-1 networks. (Ex.2001 ¶201).

Since Miesterfeld describes that data can move from the VDB to the ITS and also from the ITS to the VDB, the ITS interface must also include a similar table of "pertinence" data. If there are N total networks, then there are N network interfaces, and each of these must have pertinence data for each of the other N-1 networks. Thus the complexity of the system scales as N-1 pertinence tables for N different networks, or N(N-1). This is *exactly* the sort of *nonlinear* complexity scaling that the '477 Patent was seeking to avoid. (Ex.2001 ¶202).

Thus even if Miesterfeld's memory could be considered to be a bulletin board, the way Miesterfeld describes the process, the complexity scales *nonlinearly*, and it therefore fails to meet the claim 3 limitation. (Ex.2001 ¶203).

d. Claims 12-14 and 17-19

Patent owner agrees with Petitioner that claim 12 differs from claim 1 only in that claim 12 includes "Media Oriented Systems Transport" ("MOST") among the types of buses the first and second physical networks that may be selected from and interfaced with. Thus, as did Petitioner, Patent Owner relies on its previous analysis of claims 1, 2 and 3 to demonstrate why Petitioner errs in arguing the claims 1-3 and 12-14 would have been obvious in 2002/2003. MOST adds an additional limitation, but as claims 1-3 and 6-7 have not been shown to be obvious, it is unnecessary to further consider the MOST limitation.

e. Claim 23

Petitioner relies on the same arguments as with claim 1 to challenge claim 23. (Pet.71-73). Claim 23 is not entirely similar to independent claims 1 and 12. However, given that Petitioner has relied on the same arguments it made in connection with claim 1, and, as detailed above, claim 1 is not obvious even without considering other differences, Petitioner's cited prior art fails here for the same reasons that such effort failed with respect to claim 1.

f. Claim 30

Petitioner relies on the same arguments as with claim 23 to challenge claim 30. (Pet.73). Patent Owner incorporates its responses as to claim 23.

2. Ground 2: Whether Miesterfeld, Wong, Grattan, Wense, and Nikklason in Combination with Boling Renders Obvious Claims 4-5, 15-16, and 26-27

a. Claim 4

The "diagnostic mode" means "a mode, distinct from normal operation, that allows the inspection of the health of the system while it is running." (pp. 18-20, *supra*). Petitioner relies solely on Boling (Ex.1016, Ex.1032) to meet this limitation. (Pet.74-75). But Boling discusses only debugging, and never mentions any diagnostic mode. Inferentially acknowledging this fundamental deficiency, Petitioner asserts that debugging inherently includes diagnosing the system.

Petitioner's arguments suffer three fatal problems. First, "diagnoses" and "debugging" are different processes, and the '477 Patent clearly distinguishes between a "diagnostic mode" and a "debugging mode." (pp. 18-20, *supra*). Petitioner ignores this distinction, and, in any event, fails to present any evidence that a POSITA would consider that a "diagnostic mode" was inherently included in a disclosure of a "debugging mode." Second, Petitioner does not point to anything that suggests that what Bolling referred to as "debugging" is or includes what the '477 Patent meant by "diagnostic mode." The only connection between Bolling's

"debugging" and the claimed "diagnostic mode" is Petitioner's unsupported and undocumented say-so, that the two mean the same thing.

Third, even if Bolling's "debugging" was construed to be a "diagnostic mode," Bolling still does not disclose an ECU or other system running the diagnostic mode or that the debugging is an "inspection <u>of the system</u>, while the [ECU] is running." (Ex.2001 ¶212). Petitioner extracts out of context isolated phrases from Bolling, but the effort rewrites Bolling. The entirety of the section of Boling from which Petitioner extracted its phrases reads very differently than what Petitioner proposes:

> If you don't have access to an H/PC or if you want to check out Windows CE programming without the hassle of connecting to a remote device, the emulation environment is a great place to start. It's the perfect place for stepping though the code just as you would were you debugging a standard PC-based Windows program. You can set breakpoints and step though code running on a remote system, but the slow nature of the serial link as well as the difficulty in single-stepping a program on the remote system make debugging on the emulator much less painful. On the other hand, debugging on the remote system is the only way to truly test your program. While the emulator is a good first step in the debug process, nothing replaces testing on the target system.

(Ex.1016 p. 14). Bolling very clearly is "debugging" the Windows CE software. Thus, even if Bolling's "debugging" included a diagnostic mode, Bolling would still be debugging or diagnosing the software, and not "the system" which claim 4 requires. All the other citations by Petitioner are similarly distinguishable. All relate to specific debugging features of the Windows CE program, but none

involve "diagnostic mode that allows inspection of the system, while the electronic control unit is running." (Ex.2001 ¶212).

Petitioner has not presented any prior art that shows the limitation of claim 4.

b. Claim 5

Claim 5 is not obvious because it depends from claim 4 which, a shown above, is not invalid for obviousness.

Further, claim 5 requires that the ECU include code to run *the ECU* in a debugging mode – "the [ECU] to additionally run ***in*** a debugging mode." Bolling shows debugging of the Windows CE software, but does not show any host system, much less an ECU, being run ***in*** a debugging mode. (Ex.1016 at 22; Ex.1032 at 909-910; Ex.2001 ¶216).

c. Claims 15-16 and 26-27

Petitioner incorporates its arguments as to claims 4-5 as the sole basis for challenging claims 15-16 and 26-27. (Pet.76). Petitioner's argument fails for the same reasons as detailed above with respect to claims 4 and 5.

3. Ground 3: Whether Miesterfeld, Wong, Grattan, Wense, and Nikklason in Combination with Steger Renders Obvious Claims 9 and 20

These are dependent claims and are not obvious because the claims from which these claims depend are not obvious.

4. Ground 4: Whether Miesterfeld, Wong, Grattan, Wense, and Nikklason in Combination with Stanley Renders Obvious Claims 10 and 21

These are dependent claims and are not obvious because the claims from which these claims depend are not obvious.

5. Ground 5: Whether Miesterfeld, Wong, Grattan, Wense, Nikklason, Boling, Steger, and Stanley Render Obvious Claims 11 and 22

Petitioner argues claims 11 and 22 are obvious in view of its prior arguments regarding claims 4-5, 9-10, 6-7 and 1[k] where Petitioner cited the combination of Miesterfeld, Wong, Grattan, Wense, Nikklason, Boling, Steger and Stanley. For the same reasons that those claims are not invalid for obviousness, neither are claims 11 and 22.

Claim 11 (as well as claim 28) is expressly limited to an ECU with code to "interface with <u>each of</u> a FlexRay multiplexing bus, a [CAN] multiplexing bus, and a [LIN] multiplexing bus." This is the same as limitation 1[n], and, as explained previously (pp. 55-58, *supra*), Petitioner failed to show that limitation 1[n] is invalid for obviousness.

6. Ground 6: Whether Miesterfeld, Wong, Grattan, Wense, Nikklason, Boling, and Stanley Render Obvious Claim 28

Petitioner argues Claim 28 is obvious over the combination of Miesterfeld, Wong, Grattan, Wense, Nikklason, Boling and Stanley for the same reasons as Petitioner articulated for claim 11 above. Petitioner fails to show that claim 28 is

invalid for at least the same reasons that Petitioner failed to show the invalidity of claim 11.

With claim 28, however, there is another limitation which Petitioner has also failed to address. Claim 28 is dependent on claim 24, which includes the limitation:

> the non-volatile memory comprises at least one bulletin board that includes **the** stored information that is capable of being accessed by any process of any network having access to the electronic control unit.

This language is different than the language of dependent claims 2, 3, 5, 11, 13 and 14 because claim 28 requires not merely that the bulletin board store information, but that the bulletin include "the stored information" – which is the "information in the form of a packet data unit including a datum carried by a received message from the first physical network, utilizing a first network protocol" as provided in claim 23. Petitioner's failure to address both of the above limitations requires a denial of Petitioner's challenge to claim 28.

Petitioner has not presented any basis for the obviousness of this particular limitation.

IX. CONCLUSION

Patent Owner respectfully requests that Petitioner's challenges to the claims of the '477 Patent be denied in their entirety.

Dated: October 12, 2021

Respectfully submitted,

/G. Andrew Gordon/
G. Andrew Gordon
Reg. No. 64,517
Attorney for Patent Owner
(408) 390-4473
andrew@agordonlawfirm.com

/s/ George Pazuniak
George Pazuniak (#478)
O'Kelly & O'Rourke, LLC
824 N. Market Street
Suite 1001A
Wilmington, DE 19801
Direct: 207-359-8576
gp@del-iplaw.com

CERTIFICATE OF COMPLIANCE

This Paper contains 13,966 words, excluding the portions exempted by 37 C.F.R. § 42.24(a)(1). Accordingly, this Paper complies with the requirements of 37 C.F.R. § 42.24(b)(1).

Dated: October 12, 2021

Respectfully Submitted,

/G. Andrew Gordon/

G. Andrew Gordon
Reg. No. 64,517
Attorney for Patent Owner
(408) 390-4473
andrew@agordonlawfirm.com

CERTIFICATE OF SERVICE

Pursuant to 37 C.F.R. 42.6(e) and by the agreement of counsel for Petitioner, I certify that on October 12, 2021, I served a complete electronic copy of the foregoing on the Petitioner's lead and backup counsel at the following addresses:

LEAD COUNSEL – Mercedes-Benz	BACK-UP COUNSEL – Mercedes-Benz
James M. Glass (Reg. No. 46,729) Daimler-Stragent-IPRs@quinnemanuel.com QUINN EMANUEL URQUHART & SULLIVAN, LLP 51 Madison Ave, 22nd Floor New York, New York 10010 Tel: (212) 849-7000 Fax: (212) 849-7100	Brett N. Watkins (Reg. No. 60,458) Daimler-Stragent-IPRs@quinnemanuel.com Sean Damon (*Pro Hac Vice* forthcoming) Daimler-Stragent-IPRs@quinnemanuel.com QUINN EMANUEL URQUHART & SULLIVAN, LLP 1300 I Street NW, 9th Floor Washington, D.C. 20001 Tel: (202) 538-8000 Fax: (202) 538-8100

LEAD COUNSEL – BMW	BACK-UP COUNSEL – BMW
Lionel M. Lavenue (Reg. No. 46,859) lionel.lavenue@finnegan.com Finnegan, Henderson, Farabow, Garrett, & Dunner LLP 1875 Explorer Street, Suite 800 Reston, VA 20190-6023 Tel: 571-203-2700 Fax: 202-408-4400	David C. Reese (Reg. No. 67,942) david.reese@finnegan.com Finnegan, Henderson, Farabow, Garrett, & Dunner LLP 901 New York Ave., NW Washington, DC 20001-4413 Tel: 202-408-4000 Fax: 202-408-4400 Cory C. Bell (Reg. No. 75,096) cory.bell@finnegan.com Finnegan, Henderson, Farabow, Garrett, & Dunner LLP 2 Seaport Lane, 6th Floor Boston, MA 02210-2001 Tel: 617-646-1600 Fax: 202-408-4400

Dated: October 12, 2021

Respectfully submitted,

/G. Andrew Gordon/
G. Andrew Gordon
Reg. No. 64,517
Attorney for Patent Owner
(408) 390-4473
andrew@agordonlawfirm.com