UNITED STATES PATENT AND TRADEMARK OFFICE

---

BEFORE THE PATENT TRIAL AND APPEAL BOARD

---

VOLKSWAGEN GROUP OF AMERICA, INC.,
Petitioner

v.

YECHEZKAL EVAN SPERO,
Patent Owner

---

Case IPR2023-00335
U.S. Patent No. 10,894,503 B2

---

**PETITION FOR *INTER PARTES* REVIEW**
**OF U.S. PATENT NO. 10,894,503**

***Mail Stop "PATENT BOARD"***
Patent Trial and Appeal Board
U.S. Patent & Trademark Office
P.O. Box 1450
Alexandria, VA 22313-1450

**TABLE OF CONTENTS**

I. INTRODUCTION AND TECHNOLOGY OVERVIEW ..... 1
II. GROUNDS FOR STANDING (37 C.F.R. § 42.104(A)) ..... 3
III. IDENTIFICATION OF CHALLENGE (37 C.F.R. § 42.104(B)) ..... 3
IV. THE '503 PATENT ..... 5
A. Summary ..... 5
B. Independent Claims 1 and 37 ..... 5
C. Prosecution History Summary ..... 5
D. Level of Ordinary Skill in the Art ..... 6
E. Claim Construction ..... 6
"light sources" (claims 2/42, 3/43, 5/45, 18/57) ..... 7
V. GROUND 1: THE COMBINATION OF BEAM AND THOMINET RENDERS OBVIOUS CLAIMS 1-5, 7-8, 10-14, AND 18-19. ..... 8
A. A POSA would have been motivated to combine Beam and Thominet with a reasonable expectation of success ..... 10
B. Independent Claim 1 ..... 15
1. [1.P] ..... 15
2. [1.1] ..... 16
3. [1.2] ..... 16
4. [1.3] ..... 18
5. [1.4] ..... 20
6. [1.5] ..... 22
7. [1.6] ..... 24
8. [1.7] ..... 26
9. [1.8] ..... 28
10. [1.9] ..... 30
11. [1.10] ..... 32
C. Claim 2 ..... 34
1. [2.1] ..... 34
2. [2.2] ..... 35

3. [2.3] ....36
4. [2.4] ....38
D. Claim 3 .... 40
E. Claim 4 .... 42
F. Claim 5 .... 43
G. Claims 7/8 .... 44
H. Claim 10 .... 46
I. Claim 11 .... 47
J. Claim 12 .... 49
K. Claim 13 .... 51
L. Claim 14 .... 52
M. Claim 18 .... 52
N. Claim 19 .... 53
VI. GROUND 2: THE COMBINATION OF BEAM, THOMINET, AND STAM RENDERS OBVIOUS CLAIMS 37-45, 47-48, 50-53, AND 57-58 ....54
A. A POSA would have been motivated to combine Beam, Thominet, and Stam with a reasonable expectation of success. .... 55
B. Independent Claim 37 .... 58
1. [37.P] ....58
2. [37.1] ....58
3. [37.2] ....58
4. [37.3] ....58
5. [37.4] ....58
6. [37.5] ....59
7. [37.6] ....59
8. [37.7] ....59
9. [37.8] ....59
10. [37.9] ....62
11. [37.10] ....63

C. Claim 38 ..... 64
D. Claim 39 ..... 66
E. Claim 40 ..... 68
F. Claim 41 ..... 69
G. Claim 42 ..... 71
H. Claim 43 ..... 71
I. Claim 44 ..... 71
J. Claim 45 ..... 71
K. Claim 47 ..... 71
L. Claim 48 ..... 72
M. Claim 50 ..... 72
N. Claim 51 ..... 72
O. Claim 52 ..... 73
P. Claim 53 ..... 74
Q. Claim 57 ..... 74
R. Claim 58 ..... 74
VII. GROUND 3: THE COMBINATION OF BEAM, THOMINET, AND KOBAYASHI RENDERS OBVIOUS CLAIMS 9 AND 15-17. ..... 74
A. A POSA would have been motivated to combine Kobayashi with Beam-Thominet with a reasonable expectation of success. ..... 74
B. Claim 9 ..... 79
C. Claim 15 ..... 81
D. Claims 16/17 ..... 84
VIII. GROUND 4: THE COMBINATION OF BEAM, THOMINET, STAM, AND KOBAYASHI RENDERS OBVIOUS CLAIMS 49 AND 54-56. ..... 87
A. A POSA would have been motivated to combine Kobayashi with Beam-Thominet-Stam with a reasonable expectation of success. ..... 87
B. Claim 49 ..... 87
C. Claim 54 ..... 87
D. Claims 55/56 ..... 87

IX. GROUND 5: THE COMBINATION OF BEAM, THOMINET, AND BRAUN RENDERS OBVIOUS CLAIM 6. ..... 87

A. A POSA would have been motivated to combine Braun with Beam-Thominet with a reasonable expectation of success. ..... 87

B. Claim 6 ..... 91

X. GROUND 6: THE COMBINATION OF BEAM, THOMINET, STAM, AND BRAUN RENDERS OBVIOUS CLAIM 46. ..... 93

A. A POSA would have been motivated to combine Braun with Beam-Thominet-Stam with a reasonable expectation of success. ..... 93

B. Claim 46 ..... 93

XI. GROUND 7: THE COMBINATION OF KARLSSON AND HARBERS RENDERS OBVIOUS CLAIMS 1-5, 7-8, 10-14, 18-19, 37-45, 47-48, 50-53, AND 57-58. ..... 93

"light clusters" [1.2]/[37.2] ..... 93

"predefined threshold" [37.8]/[37.9] ..... 94

A. A POSA would have been motivated to combine Karlsson and Harbers with a reasonable expectation of success. ..... 96

B. Claims 1 and 37 ..... 100

1. [1.P]/[37.P] ..... 100
2. [1.1]/[37.1] ..... 101
3. [1.2]/[37.2] ..... 102
4. [1.3]/[37.3] ..... 106
5. [1.4]/[37.4] ..... 108
6. [1.5] ..... 110
7. [1.6]/[37.5], [37.6] ..... 112
8. [1.7] ..... 113
9. [1.8]/[37.7] ..... 115
10. [1.9] ..... 118
11. [1.10]/[37.10] ..... 120

C. Additional Elements of Claim 37 ..... 122

1. [37.8] ..... 123

2. [37.9] ....125

D. Claims 2/42 ....128

1. [2.1]/[42.1] ....128

2. [2.2]/[42.2] ....129

3. [2.3]/[42.3] ....130

4. [2.4]/[42.4] ....132

E. Claims 3/43 ....133

F. Claims 4/44 ....135

G. Claims 5/45 ....136

H. Claims 7/8/47/48 ....138

I. Claim 10 ....140

J. Claims 11/50 ....141

K. Claim 12 ....143

L. Claim 13 ....145

M. Claim 14/53 ....147

N. Claims 18/57 ....147

O. Claims 19/58 ....148

P. Claim 38 ....149

Q. Claim 39 ....150

R. Claim 40 ....152

S. Claim 41 ....154

T. Claim 51 ....156

U. Claim 52 ....157

XII. GROUND 8: THE COMBINATION OF KARLSSON, HARBERS, AND GOTOU RENDERS OBVIOUS CLAIMS 9, 15-17, 49, AND 54-56 ....159

A. A POSA would have been motivated to combine Gotou with Karlsson-Harbers with a reasonable expectation of success. ....159

B. Claims 9/49 ....163

C. Claims 15/54 ....164

D. Claims 16/17/55/56 ..... 166

XIII. GROUND 9: THE COMBINATION OF KARLSSON, HARBERS, AND BRAUN RENDERS OBVIOUS CLAIMS 6 AND 46. ..... 167

A. A POSA would have been motivated to combine Braun with Karlsson-Harbers with a reasonable expectation of success. ..... 167

B. Claims 6/46 ..... 171

XIV. PETITIONER IS UNAWARE OF SECONDARY CONSIDERATIONS .. 173

XV. DISCRETIONARY CONSIDERATIONS UNDER SECTIONS 314(A) AND 325(D) STRONGLY FAVOR INSTITUTION ..... 174

A. The *Fintiv* factors strongly favor institution. ..... 174

B. *Advanced Bionics* strongly favors institution. ..... 175

XVI. MANDATORY NOTICES (37 C.F.R. § 42.8(A)(1)) ..... 176

A. Real Party In Interest (37 C.F.R. § 42.8(b)(1)) ..... 176

B. Related Matters (37 C.F.R. § 42.8(b)(2)) ..... 176

C. Lead and Back-up Counsel (37 C.F.R. § 42.8(b)(3)) ..... 177

D. Service Information (37 C.F.R. § 42.8(b)(4)) ..... 178

XVII. CONCLUSION ..... 179

## PETITIONER'S EXHIBIT LIST

| *Exhibit #* | *Description* |
|---|---|
| **1001** | U.S. Patent No. 10,894,503 B2 to Spero ("the '503 patent") |
| **1002** | File History of U.S. Patent No. 10,894,503 B2 ("Prosecution History") |
| **1003** | Declaration of Dr. Jianzhong Jiao ("Jiao Decl.") in support of Petition for *Inter Partes* Review of U.S. Patent No. 10,894,503 |
| **1004** | *Curriculum Vitae* of Dr. Jianzhong Jiao |
| **1005** | U.S. Patent No. 6,144,158 to Beam |
| **1006** | U.S. Patent Publication No. 2001/0019486 to Thominet |
| **1007** | WIPO Patent Publication No. 2001/070538 to Stam *et al*. |
| **1008** | U.S. Patent No. 6,049,749 to Kobayashi |
| **1009** | WIPO Patent Publication No. 2002/004247 to Braun *et al*. |
| **1010** | WIPO Patent Publication No. 1998/054030 to Karlsson |
| **1011** | WIPO Patent Publication No. 2001/001038 to Harbers *et al*. |
| **1012** | U.S. Patent No. 5,588,733 to Gotou |
| **1013** | English Translation of Japanese Unexamined Patent Application Publication H7-65603 to Nakamura *et al*. |
| **1014** | English Translation of Japanese Unexamined Patent Application Publication H7-101291 to Satonaka *et al*. |
| **1015** | Westermann, "History and Scientific Back-up," 48th Session of GRE, EUREKA Project 1403, Informal Document No. 30, April 30, 2002 |
| **1016** | "Adaptive Front Lighting Systems (AFS)," 48th Session of GRE, EUREKA Project 1403, Informal Document No. 28, April 12, 2002 |
| **1017** | Hogrefe *et al*., "Adaptive Light Pattern – A New Way to Improve Light Quality," SAE Transactions, Vol. 106, No. 6, pp. 1-10, February 27, 1997 |
| **1018** | Löwenau *et al*., "Adaptive Light Control – A New Light Concept Controlled by Vehicle Dynamics and Navigation, SAE Transactions, Vol. 107, No. 6, pp. 31-36, February 26, 1998 |
| **1019** | Manassero *et al*., "Adaptive Headlamp: A contribution for Design and Development of Motorway Light," SAE Transactions, Vol. 107, No. 6, pp. 1-6, February 26, 1998 |

| *Exhibit #* | *Description* |
|---|---|
| **1020** | Michael Hamm, "System Strategies for Adaptive Lighting Systems," 2001 Symposium: Progress in Automobile Lighting (PAL), pp. 368-380, September 26, 2001 |
| **1021** | U.S. Patent Publication No. 2013/0258688 to Kalapodas |
| **1022** | *Intentionally Left Blank* |
| **1023** | Manassero et al., Adaptive Lighting Systems: Technical Solutions and Methodological Approach for Photometric Specifications, Progress in Automotive Lighting Vol. 6, pp. 514-525 (1999). |
| **1024** | Hanno Westermann, Lighting Performance Requirements in Vehicle Lighting Exemplified by System Requirements for AFS, Progress in Automotive Lighting Vol. 6, pp. 807-820 (1999). |
| **1025** | Diem et al., Analysis of the Eye-Movement Behaviour During Use Moveable Headlamps, Progress in Automotive Lighting Vol. 5, pp. 185-207 (1999). |
| **1026** | Kobayashi & Sugimoto, Development of the Phase-I AFS Front Lighting System, Progress in Automotive Lighting Vol. 5, pp. 449-464 (1999). |
| **1027** | *Intentionally Left Blank* |
| **1028** | Bernhard Wörner, Adaptive Frontlighting – Experimental System, Development and Functional Evaluation, Progress in Automotive Lighting Vol. 6, pp. 844-853 (1999). |
| **1029** | *Intentionally Left Blank* |
| **1030** | Assessment of Headlamp Glare and Potential Countermeasures, Survey of Advanced Front Lighting System (AFS) Research and Technology, National Highway Traffic Safety Administration (2005) |
| **1031** | *Intentionally Left Blank* |
| **1032** | First Amended Complaint, Torchlight Techs. LLC v. Daimler AG, et al., Civil Action No. 1:22-cv-00751 (D. Del.), filed August 26, 2022 (ECF No. 24) |
| **1033** | File History of Ex Parte Reexamination of U.S. Patent No. 9,955,551, Control No. 90/014,815 |
| **1034** | *Intentionally Left Blank* |

| ***Exhibit #*** | ***Description*** |
|---|---|
| **1035** | United States District Courts – National Judicial Caseload Profile, June 2022 |
| **1036** | U.S. Patent No. 5,523,193 to Nelson |
| **1037** | U.S. Patent No. 5,537,433 to Watanabe |
| **1038** | U.S. Patent No. 4,662,746 to Hornbeck |
| **1039** | U.S. Patent No. 5,061,049 to Hornbeck |
| **1040** | U.S. Patent No. 5,933,183 to Enomoto *et al*. |

# I. INTRODUCTION AND TECHNOLOGY OVERVIEW

Petitioner Volkswagen Group of America, Inc. ("Petitioner") requests *inter partes* review ("IPR") and cancellation of claims 1-19 and 37-58 of U.S. Patent No. 10,894,503 ("the '503 patent") to Yechezkal Evan Spero, purportedly exclusively licensed to Torchlight Technologies LLC (collectively "Patent Owner"). EX1032, 8. By 2000—years before the earliest possible priority date—everything claimed in the '503 patent was well-known. EX1003, ¶¶45-47. No claim elements were new and nothing was new about how those elements were combined in the claims. *Id.*, ¶48.

Petitioner's expert, Dr. Jianzhong Jiao, has over 30 years of experience in adaptive lighting, automotive lighting, and optical engineering. *Id.*, ¶¶9-20. His testimony supports that the Grounds demonstrate the conventional functionality of the '503 patent claims, rendering all challenged claims unpatentable. *Id.*, ¶¶1-41.

From 1992-1999, a global consortium of headlamp and automotive manufacturers participated in the EUREKA project to advance adaptive front lighting systems (AFS). *Id.*, ¶49; EX1015, 3-6; EX1016, 1-19; EX1023, 514-515; EX1024, 819.

By 1997, adaptive (dynamic) lighting was designed to increase safety and comfort over fixed (static) headlamps. EX1003, ¶50; EX1017, 3-10; EX1018, 33-36; EX1019, 1-2; EX1020, 368-378; EX1024, 819; EX1025, 202; EX1028, 844.

Light clusters produced an adaptive light pattern by varying illumination characteristics. EX1003, ¶51; EX1017, 3-10; EX1018, 33-36; EX1019, 1-2; EX1020, 368-378.

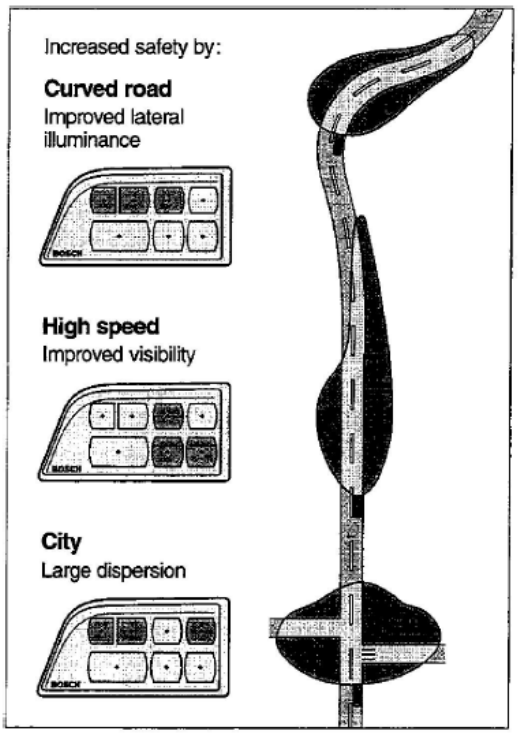


*Fig.1: Three standard driving situations with adapted light pattern seen from the bird eye's view.*

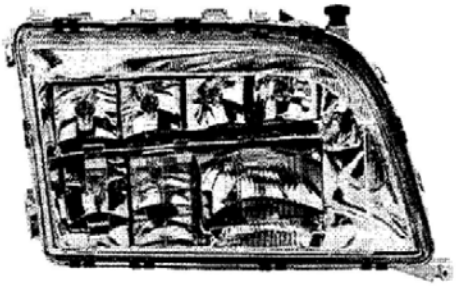

Fig 4: ALP *headlamp* sample

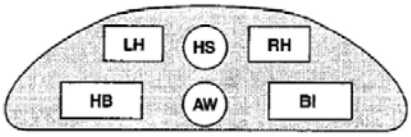


Single components:

LH Left hand bend
RH Right hand bend
HB High beam
BI Basic illumination
AW Adverse weather illumination
HS Hot spot

Fig. 5 Advanced ALP sample layout

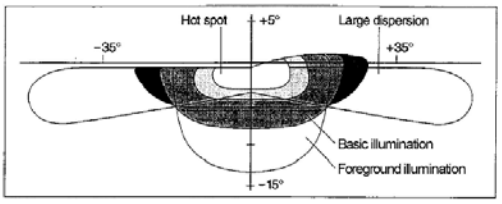


Fig. 3: Light pattern of multiple beam *headlamp* (*Isolux* curves in wall projection): The individual light *pattern* of multiple sub-units sum up to the total adaptive light pattern

EX1017, FIGS. 1, 3-5.

By 2000, adaptive headlamps with multiple light clusters and sensors detected and reduced glare, and arrays of independently controlled light clusters were developed with sufficient illuminance, directionality, and dynamic control. EX1003, ¶¶52-55; EX1005, 1:5-3:44, 4:9-59; EX1010, 1:10-26, 9:18-26, 20:29-32; EX1015, 6-18, 21; EX1009, 16:6-25, 20:15-33; EX1023, 514-15; EX1024, 815-16.

## II. GROUNDS FOR STANDING (37 C.F.R. § 42.104(A))

Petitioner certifies that the ’503 patent is available for IPR. Petitioner is not barred or estopped from requesting IPR. Torchlight Technologies LLC filed and served a complaint in Civil No. 1:22-cv-00751 on June 7, 2022, alleging infringement of the ’503 patent. This Petition is being filed within one year of service on Volkswagen Group of America, Inc.

## III. IDENTIFICATION OF CHALLENGE (37 C.F.R. § 42.104(B))

| Ground | References | Basis | Claims |
|---|---|---|---|
| 1 | Beam (EX1005), Thominet (EX1006) | §103 | 1-5, 7-8, 10-14, 18-19 |
| 2 | Beam, Thominet, Stam (EX1007) | §103 | 37-45, 47-48, 50-53, 57-58 |
| 3 | Beam, Thominet, Kobayashi (EX1008) | §103 | 9, 15-17 |
| 4 | Beam, Thominet, Stam, Kobayashi | §103 | 49, 54-56 |
| 5 | Beam, Thominet, Braun (EX1009) | §103 | 6 |
| 6 | Beam, Thominet, Stam, Braun | §103 | 46 |
| 7 | Karlsson (EX1010), Harbers (EX1011) | §103 | 1-5, 7-8, 10-14, 18-19, 37-45, 47-48, 50-53, 57-58 |
| 8 | Karlsson, Harbers, Gotou (EX1012) | §103 | 9, 15-17, 49, 54-56 |
| 9 | Karlsson, Harbers, Braun | §103 | 6, 46 |

Even if the ’503 patent was entitled to benefit of its earliest-filed provisional application:

- Beam, U.S. Patent No. 6,144,158, issued November 7, 2000, is prior art under §102(b).
- Thominet, U.S. Patent Publication No. 2001/0019486, published September 6, 2001, is prior art under §102(a).
- Stam, WIPO Patent Publication No. 2001/070538, published September 27, 2001, is prior art under §102(a).
- Kobayashi, U.S. Patent No. 6,049,749, issued April 11, 2000, is prior art under §102(b).
- Braun, WIPO Patent Publication No. 2002/004247, published January 17, 2002, is prior art under §102(a).
- Karlsson, WIPO Patent Publication No. 1998/054030, published December 3, 1998, is prior art under §102(b).
- Harbers, WIPO Patent Publication No. 2001/001038, published January 4, 2001, is prior art under §102(b).
- Gotou, U.S. Patent No. 5,588,733, issued December 31, 1996, is prior art under §102(b).

# IV. THE ’503 PATENT

## A. Summary

The ’503 patent claims recite known schemes implemented by a controller to control light clusters based on sensor data. EX1003, ¶56; EX1001, 100:3-28.[1] The specification leaves to a POSA to determine the illumination without describing an illuminance level, algorithms, or control steps. EX1003, ¶¶57-59. Unsurprisingly, a POSA would have readily understood such control (including predefined thresholds) in an adaptive headlamp system. *Id*.

## B. Independent Claims 1 and 37[2]

The independent claims recite many patentably indistinct elements—the same prior art disclosures map to corresponding elements (e.g., [1.P]-[1.4]/[37.P]-[37.4], [1.6]/[37.5]-[37.6], [1.8]/[37.7], [1.10]/[37.10]). EX1003, ¶¶60-61; Appendix A.

The disclosures mapped below for the light clusters/sources, sensor, processor, etc., of claims 1-19, apply equally to claims 37-58. *Id.*, ¶¶62-64. Minor phrasing differences do not affect the substantive application of the art. *Id*.

## C. Prosecution History Summary

Outside of non-art rejections, claims 1-70 issued without significant examination. The only art-based rejection was overcome as allegedly not qualifying

[1] Emphasis added throughout, unless noted.

[2] Appendix A compares independent claims.

as prior art. *Id.*, ¶¶65-66; EX1002, 194-199, 207-228, 247-252, 272-289, 292-299, 310-337.

### D. Level of Ordinary Skill in the Art

For the '503 patent, a POSA at the time[3] of the alleged invention would have had a bachelor's degree (B.S.) in mechanical engineering, electrical engineering, optical engineering, applied physics, or an equivalent field, as well as at least 2 years of industry experience in the area of automotive lighting and lighting-control systems. The POSA may work as part of a team, for example, with computer engineers to integrate, program, etc., controllers and various control inputs to affect control of a given light cluster. EX1003, ¶¶42-44.

### E. Claim Construction

In IPR, claims are "construed using the same claim construction standard that would be used to construe the claim in a civil action under 35 U.S.C. 282(b)." 37 C.F.R. § 42.100(b). Claim terms must be given their ordinary and customary meaning as understood by a POSA at the time of the invention, in light of the specification and prosecution history. *Id.*; *Phillips v. AWH Corp.*, 415 F.3d 1303, 1312-1313 (Fed. Cir. 2005) (en banc); 83 Fed. Reg. 51,340 (Oct. 11-2018); EX1003, ¶¶67-68.

---

[3] Without conceding, Petitioner uses July 12, 2002 as the earliest effective priority date. The POSA definition would not change based on a later priority date.

**"light sources" (claims 2/42, 3/43, 5/45, 18/57)**

Patent Owner submitted a proposed claim construction in a reexamination of U.S. Patent No. 9,955,551 ("the '551 patent"), but the Central Reexamination Unit did not address the proposed construction. EX1033, 15 ("*light source* to mean individual LED"), 19 ("*light source* to mean an individual LED"); EX1003, ¶69.

The '503 patent, which shares the same specification, states "[a]s used herein, the term 'light source', LED or 'solid state light source' means any system that is capable of receiving an electrical signal and producing light in response to the signal." EX1001, 17:7-10. Further, the '503 patent states "[t]hus, the term 'light source' should be understood to include light emitting diodes of all types…[and] [i]ncandescent and discharge light sources." *Id.*, 17:10-20. Therefore, a POSA would have understood that "light source" includes any known headlamp light sources, for example but not limited to, incandescent, discharge, laser diode, and LED light sources that are electrically controllable, which includes the combination of light sources and spatial light modulators, for example, microbeam sources and spotlight beam sources. EX1003, ¶70; EX1005, 8:4-17; EX1010, 4:32-5:10; EX1009, 14:16-20.

Furthermore, Patent Owner's proposed construction would not be applicable here at least because the '503 patent involves different claims. EX1003, ¶71.

Additionally, the claims do not recite "LED light source," and therefore do not require the light source to be an LED. *Id*.

The applied references also cover Patent Owner's proposed construction of a "light source" to mean an "individual LED." EX1005, 8:4-17 ("*light emitting diodes*"); EX1010, 4:32-5:10 ("*light-emitting diodes*"); EX1003, ¶72. Thus, the challenged claims are unpatentable under either construction.

Without waiver, Petitioner does not believe any other claim terms require specific construction and should receive their plain and ordinary meaning, in the context of the '503 patent specification, under *Phillips*.[4] Under any reasonable construction, the challenged claims are unpatentable. EX1003, ¶73.

## V. GROUND 1: THE COMBINATION OF BEAM AND THOMINET RENDERS OBVIOUS CLAIMS 1-5, 7-8, 10-14, AND 18-19.

Beam discloses every feature in claims 1-5, 7-8, 10-14, and 18-19. The specific portions of Beam that disclose each feature are provided and explained below. To avoid doubt, Beam is combined with Thominet, for [1.2] (and [37.2])—light clusters. EX1003, ¶¶74-89, 115.

Beam discloses "[t]he *angular* position or attenuation of *each of the microbeams* is *independently* set by the controller 108." EX1005, 4:46-48, FIGS. 1-2, 4, Abstract, 7:25-29, 8:4-34. Each microbeam is a directional "cluster" or

[4] Petitioner reserves the right to challenge the claims under 35 U.S.C. §112 in other forums.

"source," having its own independent *angular* position, that combines to form the headlamp beam; so Beam's lamp 202 and SLM 203 (see Figure 2) form at least two light clusters/sources to provide illumination in desired subsections. *Id.*, 7:25-29, 8:4-34, 4:26-5:21, FIGS. 2, 4-6; EX1003, ¶¶75-84, 116. Beam also discloses clusters that include more than one microbeam. EX1005, 4:26-5:21, FIGS. 2, 4-6; EX1003, ¶116.

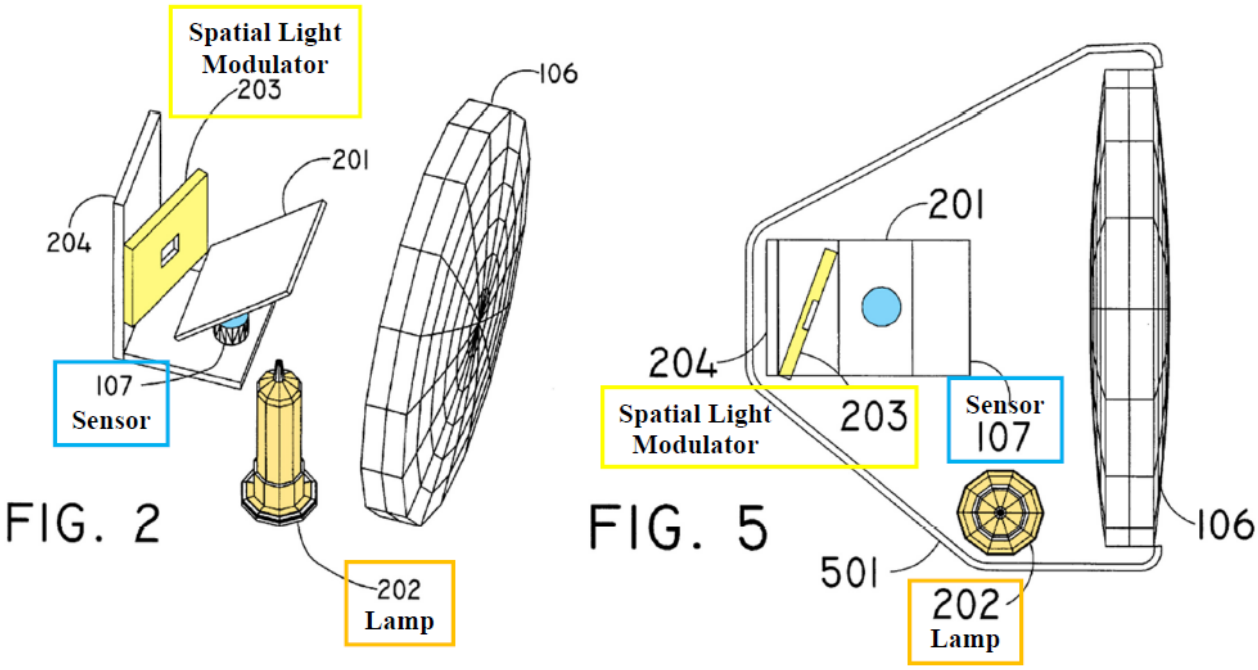


EX1005, FIGS. 2, 5 (annotated).

Beam's LED array has the same functionality as lamp 202 and SLM 203. EX1005, 3:62-64, 5:3-16, FIGS. 4, 6, 8:4-17. So, Beam's LED array also includes light clusters/sources. *Id.*, 3:62-64, 4:26-5:16, FIGS. 2, 4-6, 8:4-17; EX1003, ¶¶80, 117.

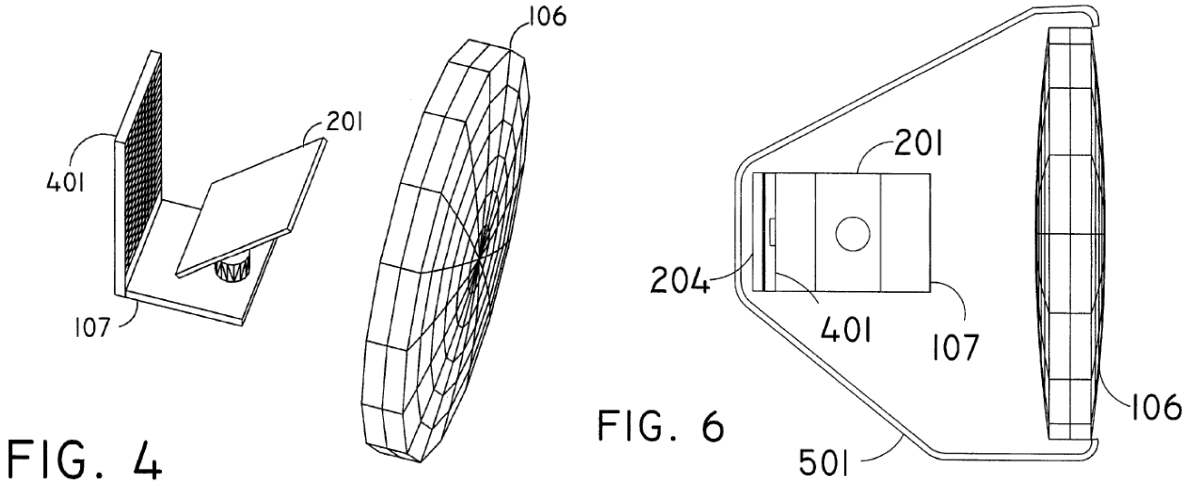


EX1005, FIGS. 4, 6.

Thus, Beam discloses "a plurality of light clusters"—independently controllable angular microbeam clusters/sources—as in [1.2]/[37.2]. EX1003, ¶118.

If Patent Owner argues, incorrectly, that Beam does not, Thominet does. *Id.*, ¶¶119-120.

### A. A POSA would have been motivated to combine Beam and Thominet with a reasonable expectation of success.

Thominet provides implementation detail for "light clusters" for different functions. *Id.*, ¶¶85, 121. So, it would have been obvious to a POSA to implement Thominet's multiple directional beam regions—through either software or hardware—for different functions in Beam. *Id.*

Indeed, Thominet discloses an implementation to *automatically* provide different spatial distributions, improving visibility in different situations (low visibility, fog, low/high speeds, recognizing counter traffic, curves, etc., *see* EX1006, ¶¶7-8, 23-26, FIGS. 1-2), thereby automating some of Beam's *manual*

control methods. EX1003, ¶¶86-89, 122-123; EX1005, 3:8-44, 5:33-54, 7:1-13; EX1006, ¶26.

*First*, including an additional control technique (software implementation) for Beam—Thominet's *known technique* of using multiple directional beam regions for different functions—would have added different functions to Beam's system for different situations. EX1003, ¶124. Beam's techniques and system of controlling individual microbeams emphasize safety of all drivers. EX1005, 3:8-45, 6:53-7:13, 4:26-5:21, FIGS. 1-2, 5, Abstract, 8:4-17; EX1003, ¶125. Controllable headlamps "provide greatly improved safety and comfort to the motoring public." EX1005, 3:8-45. Beam enables "the driver to see more clearly at night," while protecting others from glare. *Id*., 4:10-25, 6:9-27, 3:8-45; EX1003, ¶125.

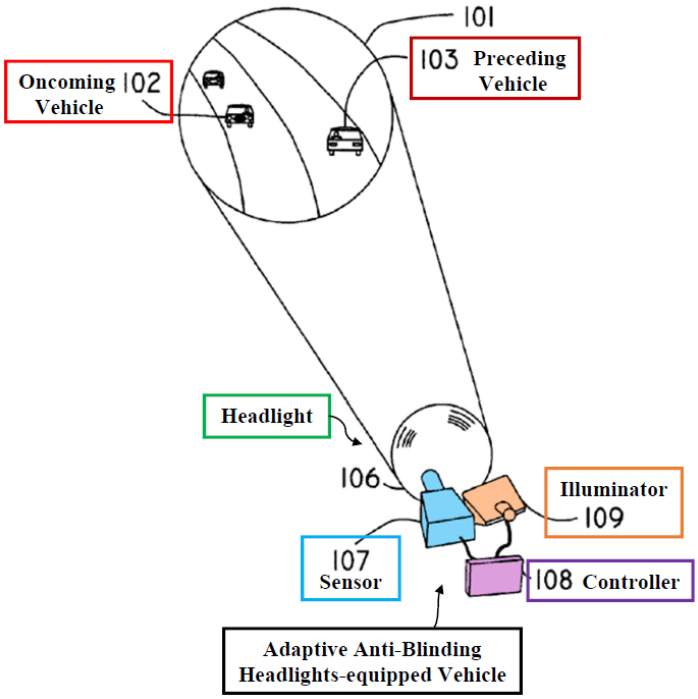


EX1005, FIG. 1 (annotated).

Beam recognizes safety benefits of different spatial distributions "for conditions like rain, snow, or fog." *Id.*, 3:29-36, 1:54-59, 4:48-59. And Thominet's *technique* (software implementation), also enhances visibility, increasing safety—using multiple beam regions (clusters) for different functions. EX1006, ¶¶17-18, 21-26, FIGS. 1-3, ¶3, ¶20, ¶27, ¶¶5-8. Semiconductor light sources 10 are arranged in different beam regions 22, 24, 26, 28 for different situations. *Id.*, ¶¶7-8, 17-18, 21-27, FIGS. 1-3; EX1003, ¶¶126-128.

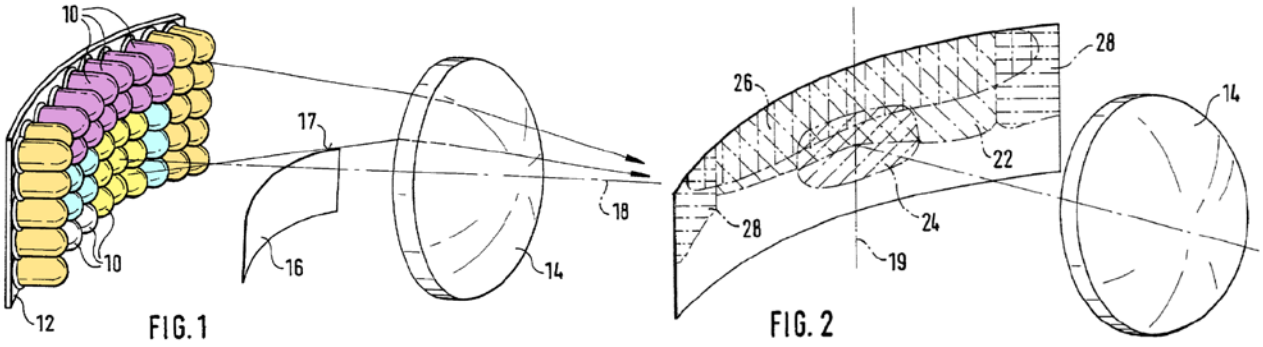


EX1006, FIGS. 1-2 (annotated).

Thominet's express control of having multiple beam regions (clusters), implemented with Beam's controller 108/illuminator 109 (including SLM 203), would have provided Beam with different spatial distributions for different situations beyond reducing glare for drivers. EX1003, ¶129. This application of Thominet's known technique (software implementation: multiple beam regions for different functions), to Beam's similar, known device (dynamic system with controllable microbeams), in the same way, would have been obvious. *Id.*, ¶130; *KSR Int'l Co. v. Teleflex Inc.*, 550 U.S. 398, 417 (2007). Thominet's known

technique is fully described along with its benefits (improved visibility); thus, a POSA would have readily applied it to Beam, in the same way. EX1003, ¶130; *KSR*, 550 U.S. at 419-421.

A POSA would have had a reasonable expectation of success combining Beam and Thominet, for example, by modifying software instructions Beam's memory of its controller/processor to organize Beam's microbeam array into multiple beam regions (clusters) for different functions. EX1003, ¶131. This would have been routine and well within a POSA's skill due to the similarities in Beam's and Thominet's adaptive systems—their common components were well-known and there would have been no limitations for a POSA to make such modification. EX1003, ¶132.

*Second*, a POSA would have sought to incorporate *known components* (hardware implementation) of Thominet's semiconductor light sources 10 on curved surface 12 (arranged in different beam regions 22, 24, 26, 28, *see* EX1006, ¶¶17-20, 23-26, FIGS. 1-2, 5-7) into Beam (with flat array of light sources 401). EX1003, ¶¶133-134. Again, this would have provided different spatial distributions for different situations, improving visibility and thereby safety. *Id.*

Through its *system components* (hardware implementation), Thominet, like Beam, seeks to enhance visibility and thereby increase safety. *Id.*, ¶135. Indeed, semiconductor light sources 10 arranged on curved surface 12 provide beam regions

22, 24, 26, 28 (clusters) for different situations. EX1006, ¶¶7-8, 17-18, 21-26, FIGS. 1-2; EX1003, ¶135.

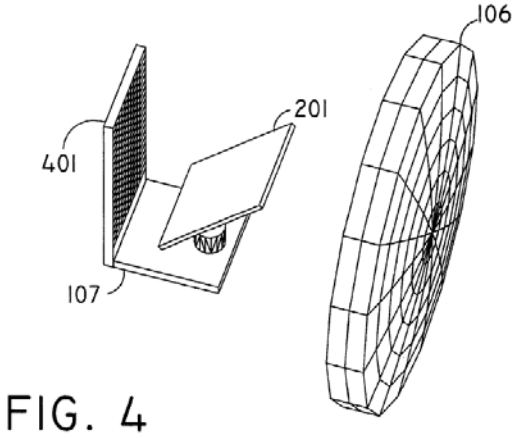


EX1005, FIG. 4.

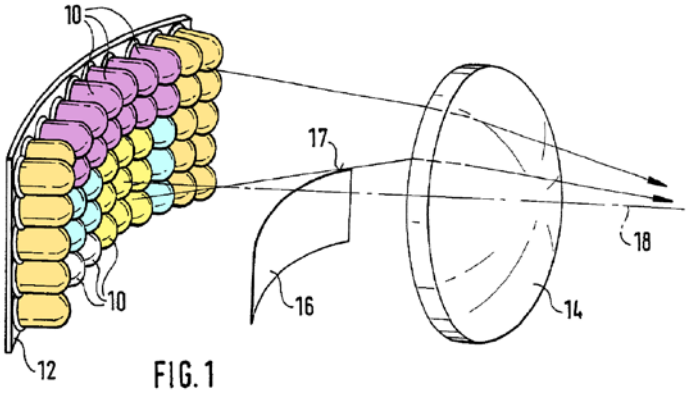


EX1006, FIG. 1 (annotated).

Like the software implementation, this hardware combination—Beam's LED array and Thominet's semiconductor sources 10 on curved surface 12 arranged in beam regions 22, 24, 26, 28—would have provided Beam with different spatial distributions for different situations, as in Thominet, thereby improving safety. EX1005, 3:62-64, 4:26-5:16, FIGS. 4, 6, 8:4-17; EX1003, ¶136. This would have been combining prior-art elements or a simple substitution of one known element for another (Beam's LED array on a flat surface and Thominet's semiconductor sources 10 on a curved surface 12) according to known methods (disclosed in Beam and Thominet) to yield predictable results (improved visibility and safety). EX1003, ¶136; *KSR* at 415-418.

A POSA would have had a reasonable expectation of success combining Beam and Thominet, for example, by modifying the flat surface of Beam's LED

array with Thominet's curved surface 12 to provide multiple light clusters/sources (e.g., beam regions 22, 24, 26, 28) for different functions. EX1003, ¶137. This would have been routine and well within a POSA's skill due to the similarities in Beam's and Thominet's systems. *Id.*, ¶¶138-139.

### B. Independent Claim 1[5]

#### 1. [1.P]

Beam's adaptive anti-blinding headlight (AABH) system is for a vehicle. EX1005, 3:8-24, 4:10-59, FIGS. 1-2, 7; EX1003, ¶¶140-141.

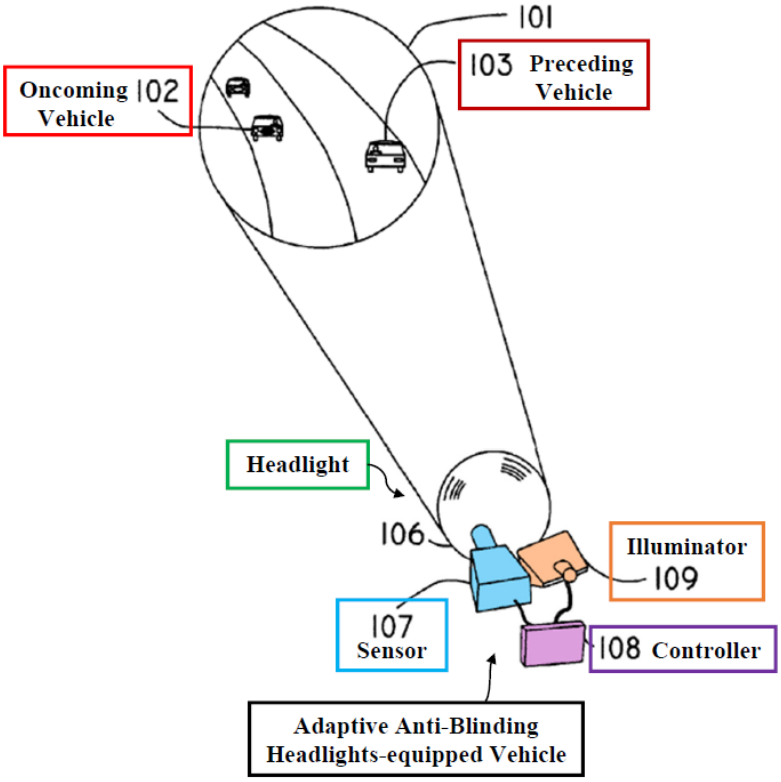


EX1005, FIG. 1 (annotated).

[5] All independent claim language is in Appendices A and B.

**2. [1.1]**

Beam's "*AABH units*…[are] *mounted* on a *vehicle*." EX1005, 6:9-34, FIG. 1; EX1003, ¶¶142-143.

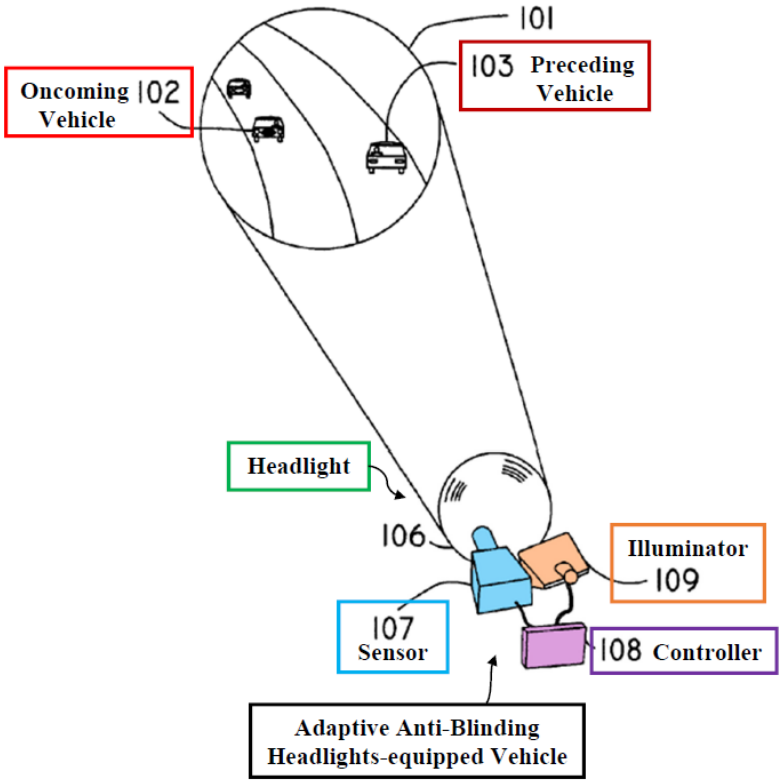


EX1005, FIG. 1 (annotated).

**3. [1.2]**

*See Supra* Sections V/V.A; EX1003, ¶¶115-138, 144-145. Each of Beam's microbeams is a "cluster" that combines to form the headlamp beam; so Beam's lamp 202 and SLM 203 (or Beam's LEDs) form at least two light clusters. EX1005, 5:61-65, Abstract, 8:4-17, FIGS. 2, 5; EX1003, ¶145, 147-148. Beam also discloses clusters having at least two microbeams. EX1005, 4:26-5:21, FIGS. 2, 4-6; EX1003, ¶146.

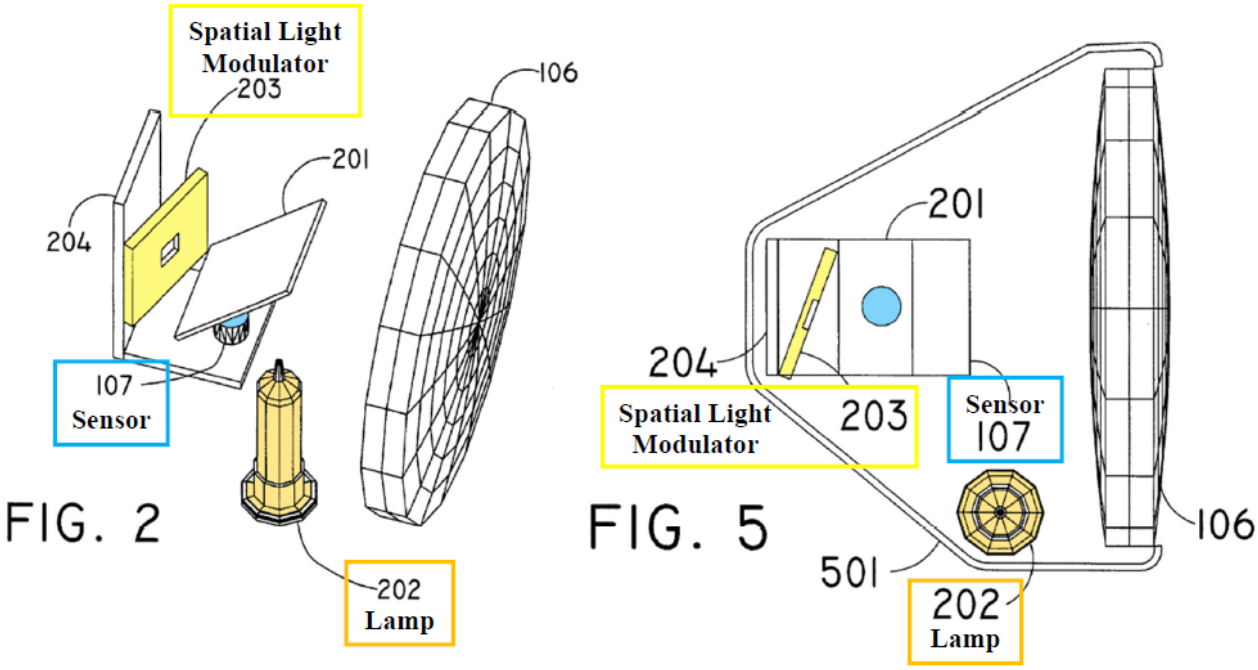


EX1005, FIGS. 2 and 5 (annotated).

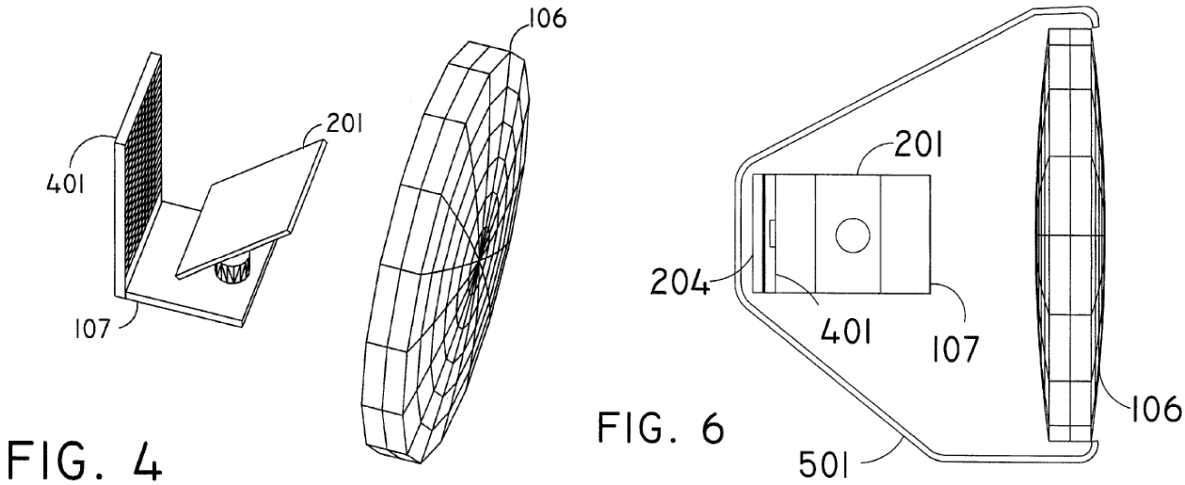


EX1005, FIGS. 4 and 6.

If Patent Owner argues, incorrectly, Beam does not disclose [1.2], Beam-Thominet renders it obvious. EX1003, ¶149, 151-170; *supra* Section V.A.

Thominet's semiconductor light sources 10 (e.g., LEDs) are arranged on curved surface 12 to provide regions 22, 24, 26, 28 (light clusters) for different functions. EX1006, ¶¶17-18, 21-26, FIGS. 1-2; EX1003, ¶150.

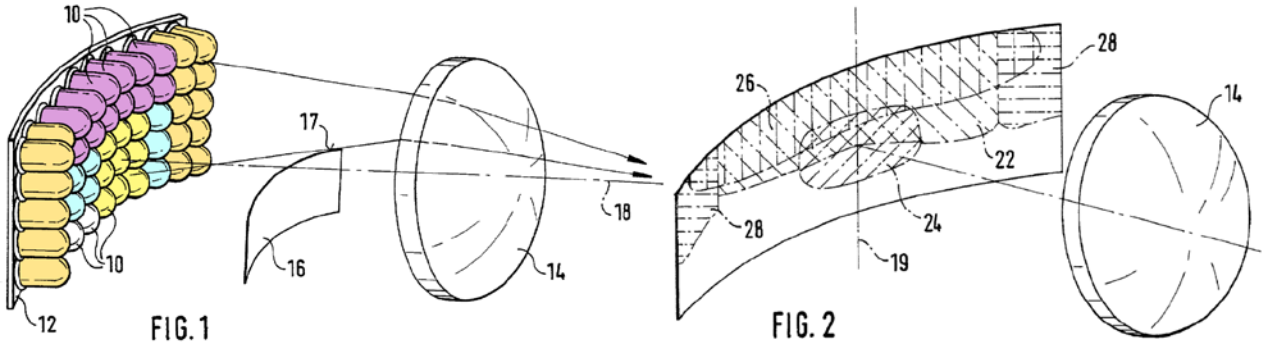


EX1006, FIGS. 1-2 (annotated).

**4. [1.3]**

Beam's "*processor 1105*" controls "the *intensity*, and/or the *angular position*" of the microbeams. EX1005, 5:34-6:19, Abstract, FIGS. 1, 1C-1D, 2, 5, 7, 1:6-18, 4:26-5:21; EX1003, ¶¶171-172. Thus, "intensity" and "angular position" are "different illumination characteristics." EX1003, ¶172; EX1001, 16:43-50, 2:28-30.

Beam also illuminates a plurality of subsections (shaded/non-shaded areas) of a field-of-view. EX1005, 5:33-6:27, FIGS. 1C-1D; EX1003, ¶¶173-174.

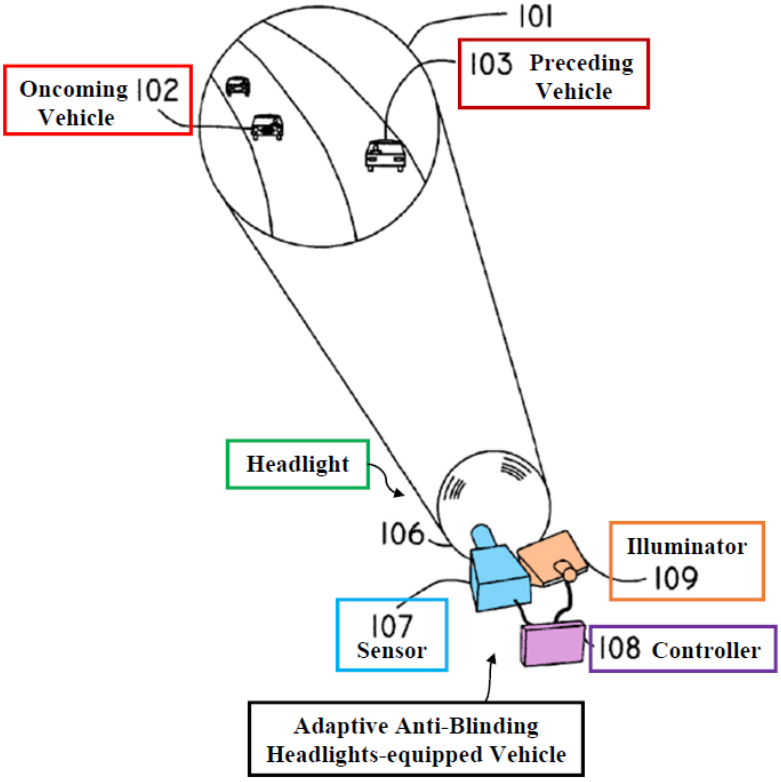


EX1005, FIG. 1 (annotated).

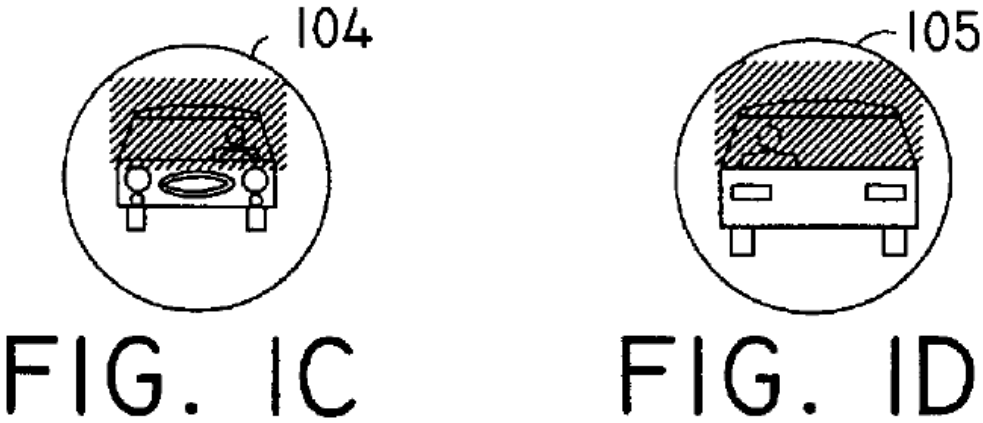


EX1005, FIGS. 1C-1D.

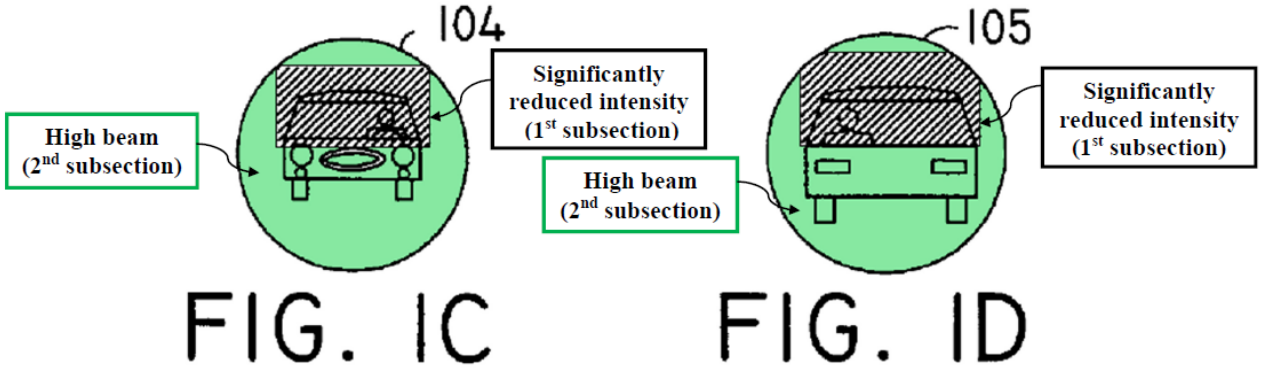


EX1005, FIGS. 1C-1D (annotated).

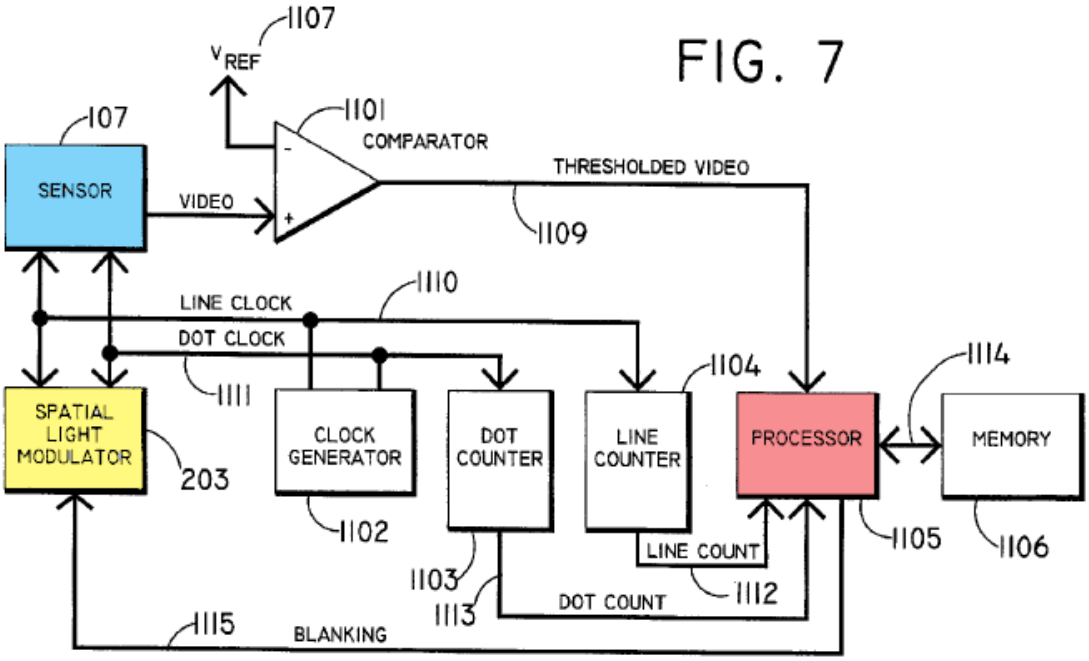


EX1005, FIG. 7 (annotated).

**5. [1.4]**

Beam detects headlights/taillights of an oncoming/preceding vehicle 102, 103 in a field-of-view 101 and Beam's "controller module uses the sensor spatial data (video)…to *control the Illuminator*," based on those subsections. EX1005, 4:10-25, 5:33-54, FIGS. 1, 1A-1D, 7, 6:12-27, 1:5-18; EX1003, ¶¶175-176. Beam discloses

"light clusters" and "at least two…light clusters" operate to create a headlight beam.

*See supra* Section V.B.3; EX1003, ¶¶144-170, 177-179.

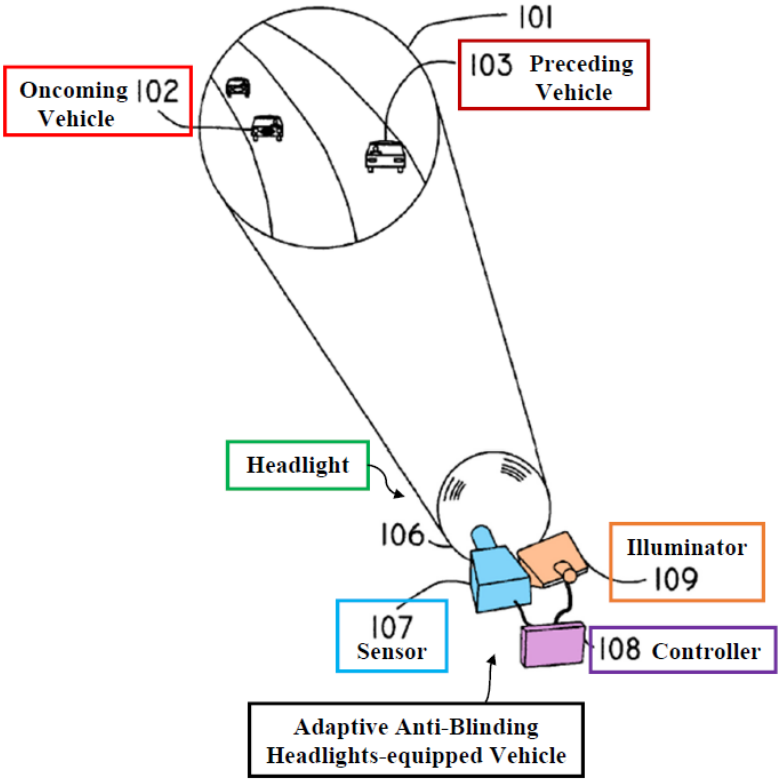


EX1005, FIG. 1 (annotated).

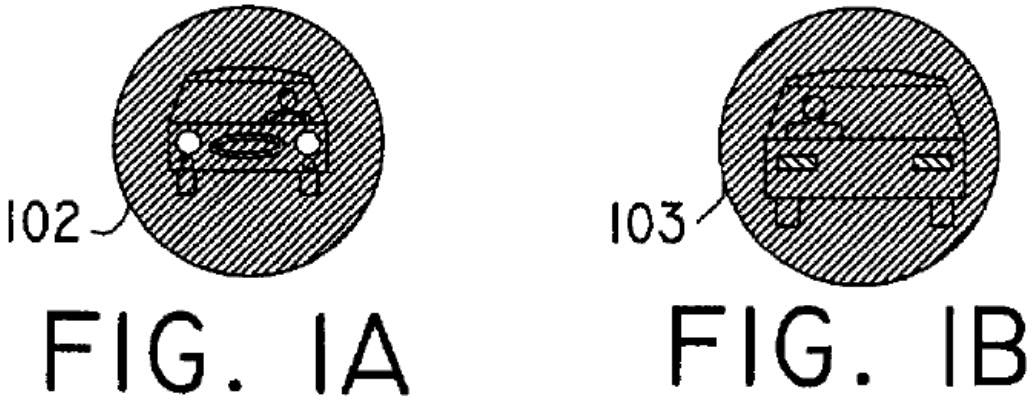


EX1005, FIGS. 1A-1B.

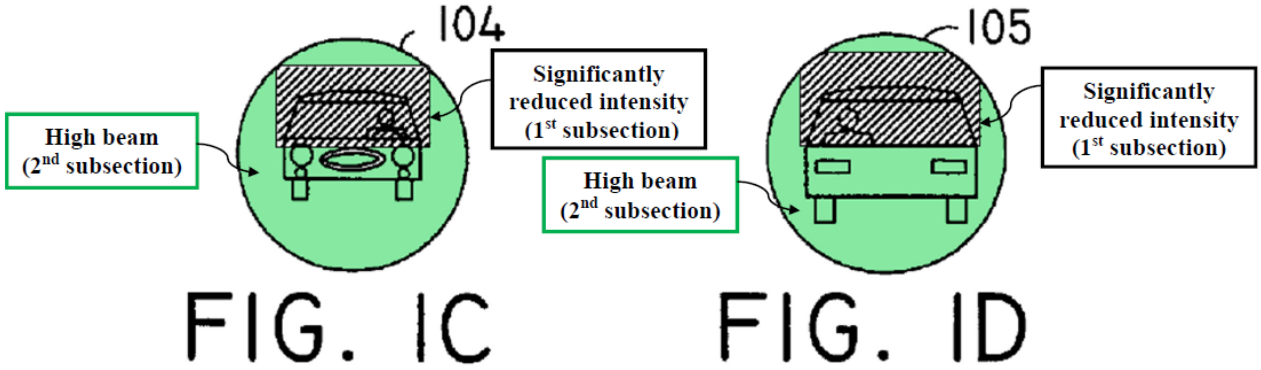


EX1005, FIGS. 1C-1D (annotated).

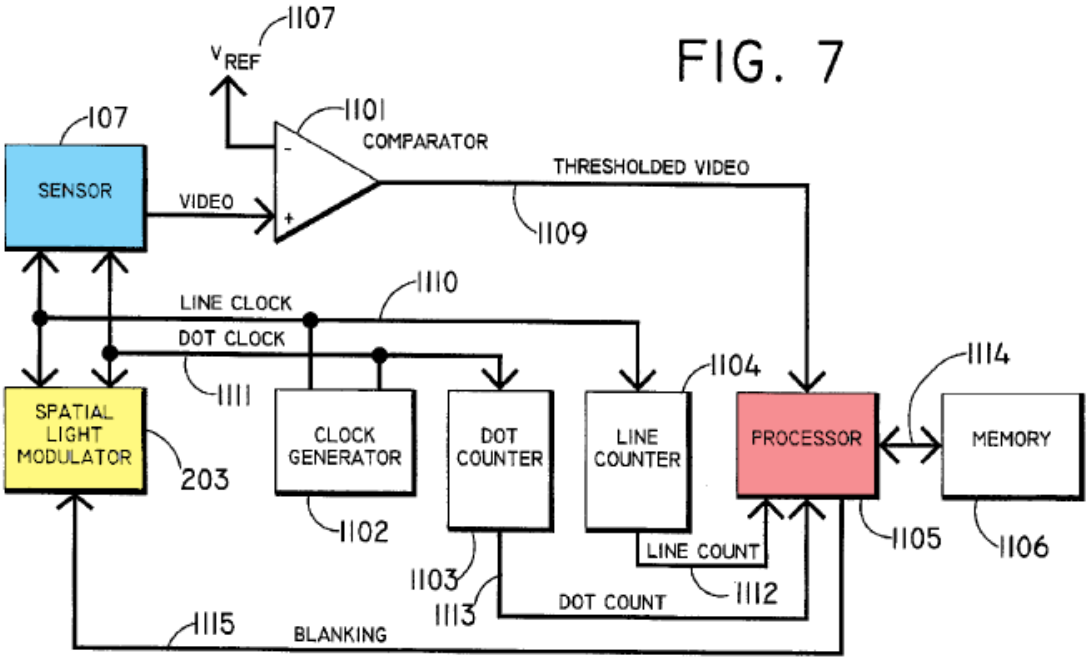


EX1005, FIG. 7 (annotated).

**6. [1.5]**

Beam's "controller module uses the *sensor spatial data (video)*…to *control the Illuminator*" and "*processor*…outputs *blanking signals*…*command[ing] the appropriate pixels to be reduced*." EX1005, 6:12-27, 5:34-54, FIGS. 1, 1C-1D, 7, 8:35-38, 1:5-18, 4:10-5:65; EX1003, ¶180. Thus, Beam's controller includes

"electronic control circuitry" (blanking bus). EX1005, 5:33-54, 4:36-59, 8:4-17, FIGS. 1, 7; EX1003, ¶181. Thus, Beam's controller/processor sends control signals (blanking/non-blanking) to illuminator (SLM 203) to control microbeams to "independently operate the light clusters." EX1005, 5:34-54, FIGS. 1, 1C-1D, 7; EX1003, ¶¶182-183.

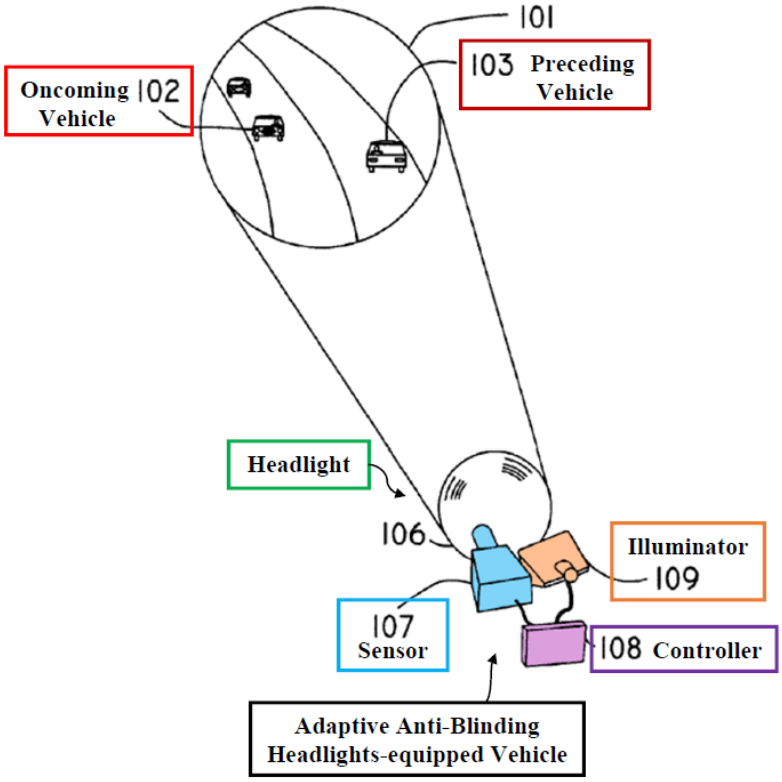


EX1005, FIG. 1 (annotated).

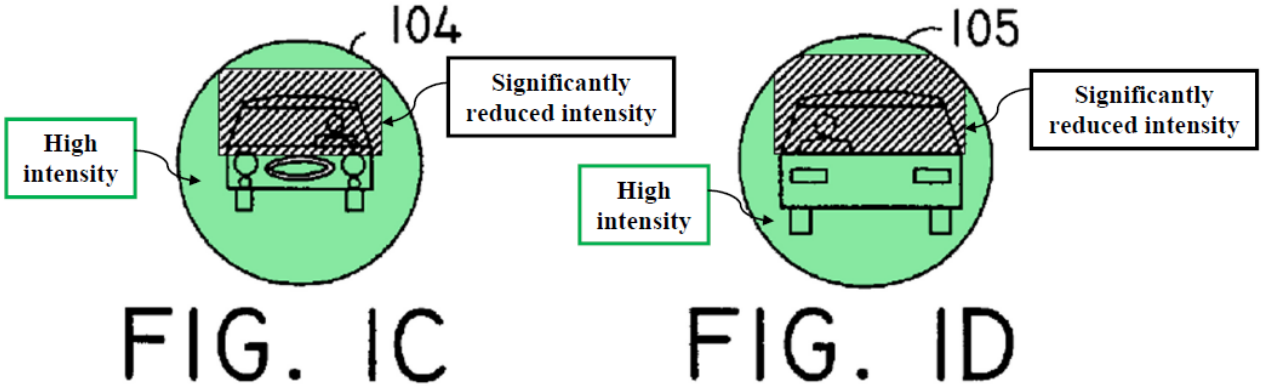

EX1005, FIGS. 1C-1D (annotated).

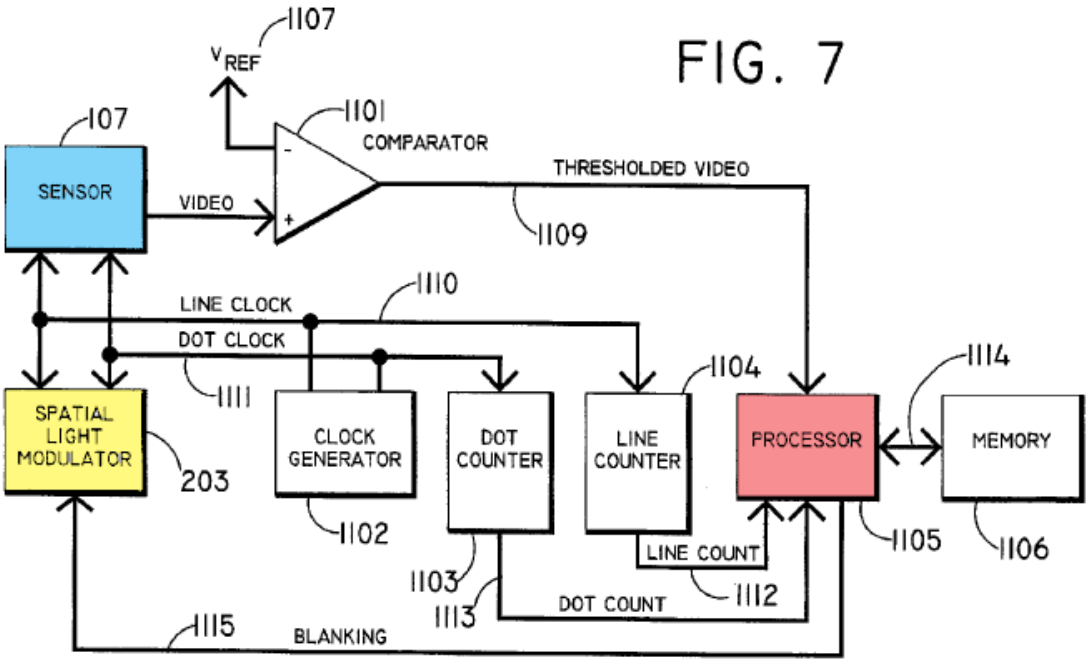


EX1005, FIG. 7 (control circuitry) (annotated).

**7. [1.6]**

Beam's *sensor 107* detects headlights/taillights of an oncoming/preceding *vehicle* in field-of-view 101. EX1005, 4:10-25, FIGS. 1, 1A-1B, 7, 6:12-19, 4:26-36; EX1003, ¶184. The sensor data is "predefined as pertinent" because Beam "tracks the location of the…vehicle" "to determine the locations to be blanked." EX1005, 5:46-54, 6:11-27, FIGS. 1, 1C-1D, 7; EX1003, ¶¶185-186.

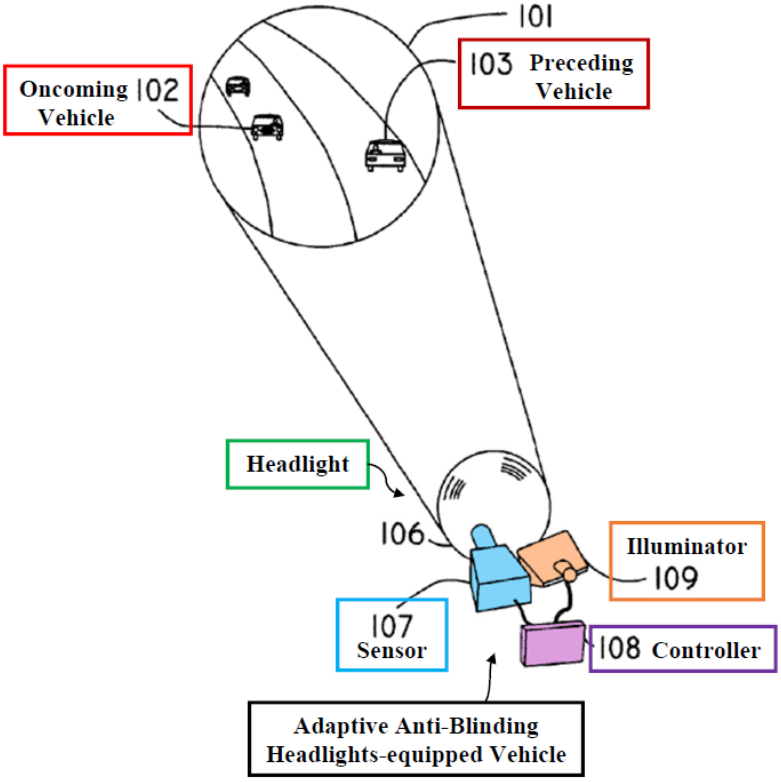


EX1005, FIG. 1 (annotated).

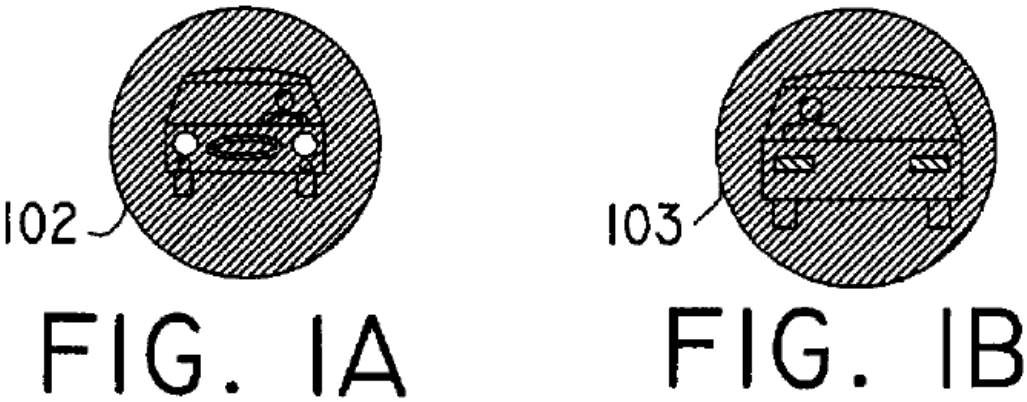


EX1005, FIGS. 1A-1B.

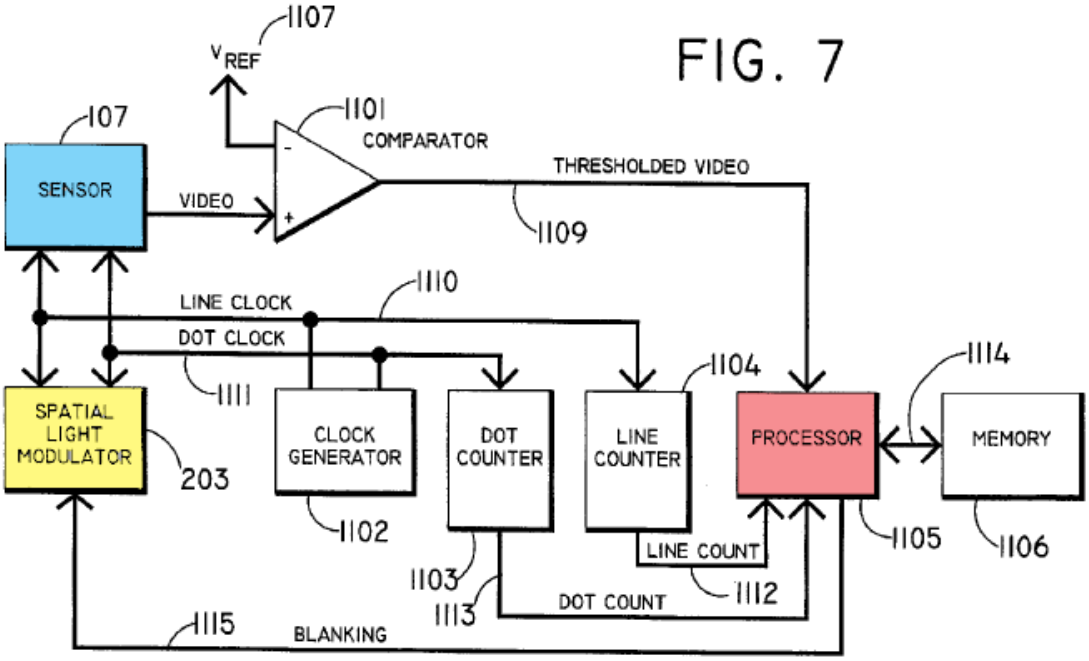


EX1005, FIG. 7 (annotated).

**8. [1.7]**

Beam's "*data* from sensor 107…[is] input to *a processor 1105*" (communicated to processor) and "[p]rocessor 1105 uses appropriate *algorithms* on the incoming data…and stores them in *memory 1106*." EX1005, 4:10-25, 5:13-65, FIGS. 1, 7, 8:35-38; EX1003, ¶¶187-188.

Thus, Beam's controller is "a logical controller including a processor" because Beam's "block diagram of the electronics portion of controller 108" (Figure 7) includes processor 1105 in communication with memory 1106, sensor 107, and SLM 203 (blanking bus). EX1005, 5:33-54, 4:36-59, 8:4-17, FIGS. 1, 7; EX1003, ¶¶189-190.

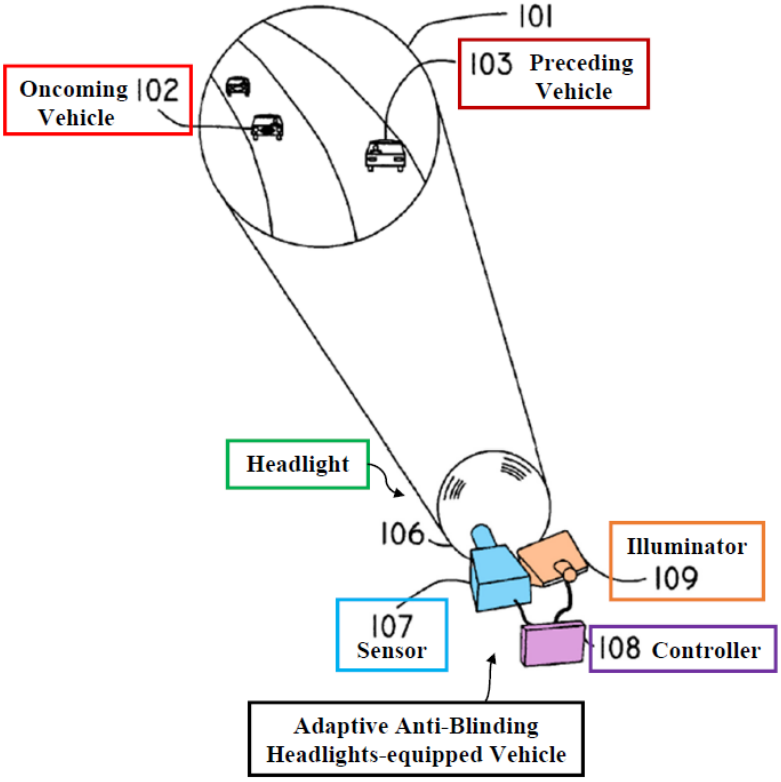


EX1005, FIG. 1 (annotated).

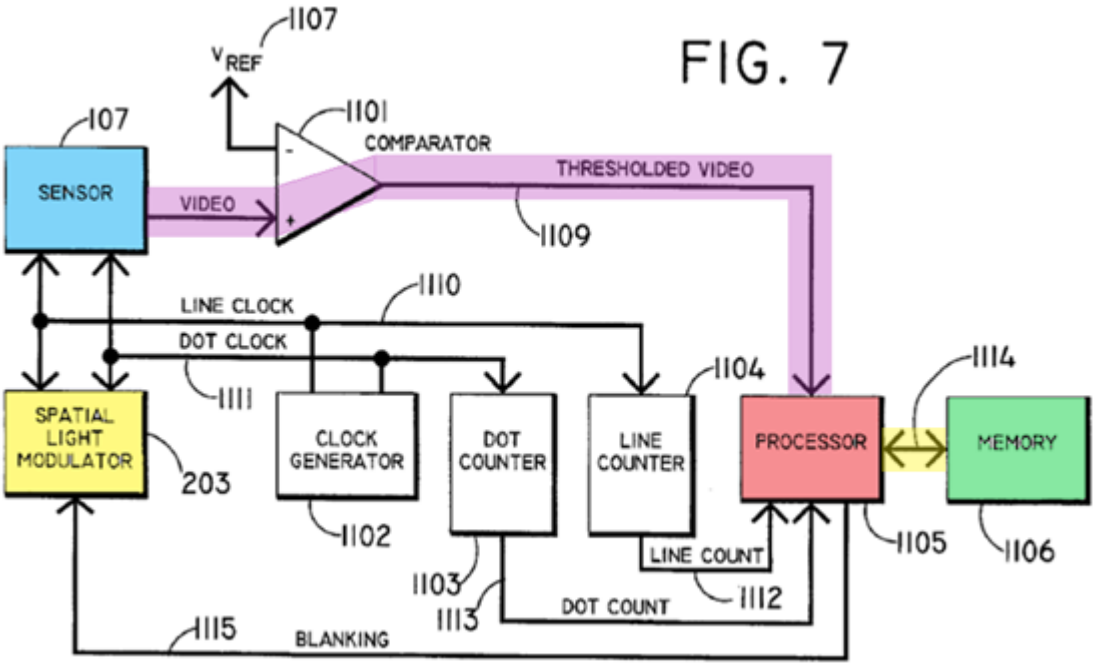


EX1005, FIG. 7 (controller with processor/control circuitry) (annotated).

**9. [1.8]**

Beam's "*[p]rocessor 1105* uses appropriate *algorithms*…to *determine the locations to be blanked*…and outputs *blanking signals*…*command[ing]* the appropriate pixels to be *reduced*." EX1005, 5:34-36, 5:46-54, FIGS. 1, 1C-1D, 7; Abstract, 6:14-19, 5:65-6:2; EX1003, ¶¶191-192. Beam's processor is also used in "*determining*…*the shape, size and location of an area to be darkened*." EX1005, 8:23-38, FIGS. 1, 1C-1D, 7; 1:5-18, 2:59-3:3, 4:10-25, 5:13-15, 5:33-54; EX1003, ¶193.

Thus, Beam's processor processes "algorithms" and sensor data to "determine an illumination for at least two of the subsections" (shaded area of reduced intensity/non-shaded area of high intensity). EX1005, 5:33-6:27, FIGS. 1C-1D; EX1003, ¶¶194-195.

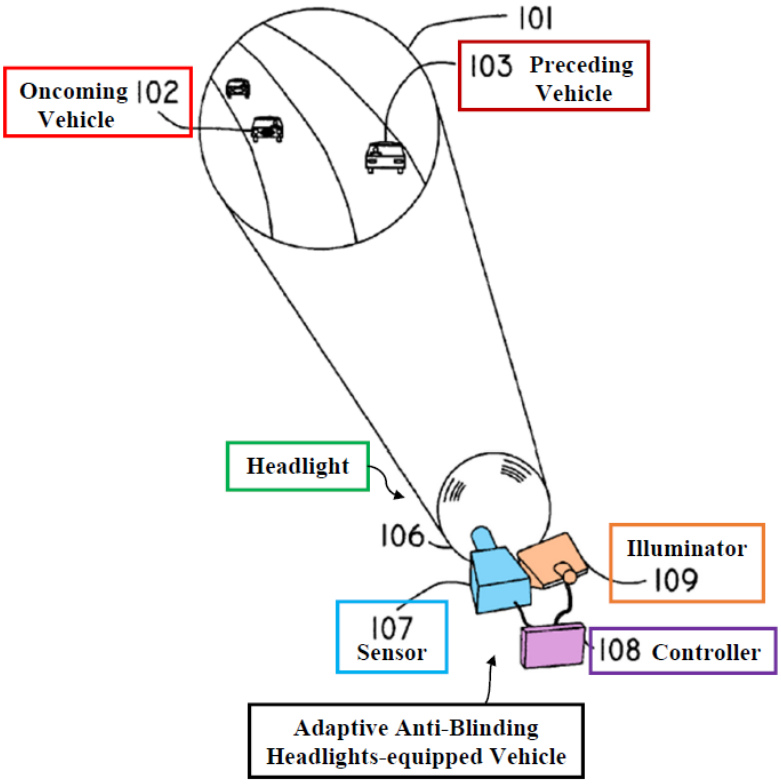


EX1005, FIG. 1 (annotated).

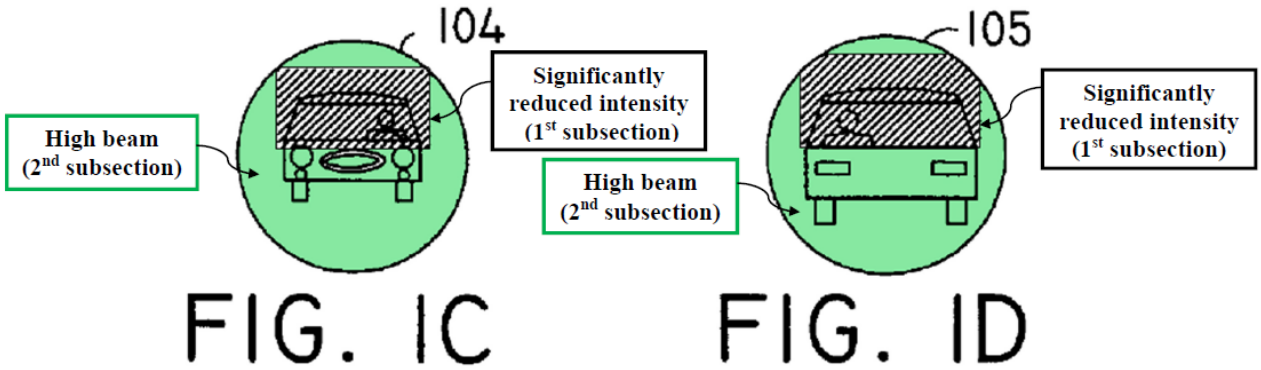


EX1005, FIGS. 1C-1D (annotated).

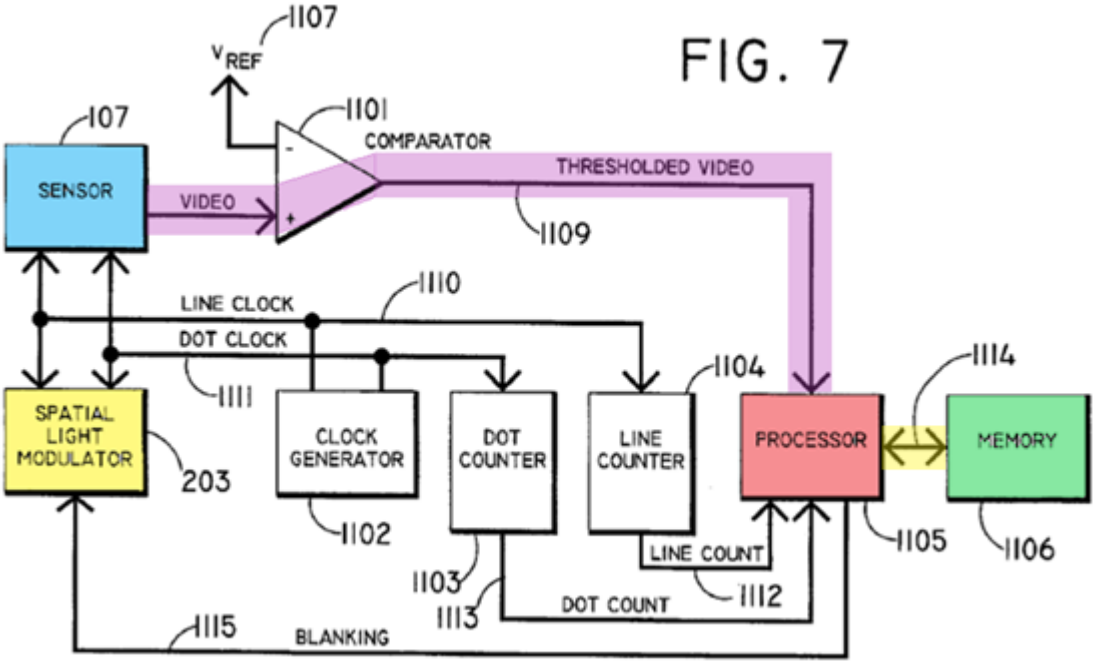


EX1005, FIG. 7 (annotated).

**10. [1.9]**

Beam's illumination in shaded areas is "*significantly less* than with current *low beams*" and emphasizes controlling to eliminate "*blinding* of a driver in an *oncoming vehicle*." EX1005, 1:5-18, FIGS. 1, 1C-1D, 7, 2:59-3:3, 4:20-25, 5:46-6:4; EX1003, ¶¶196-197. This "reduce[s] glare." EX1003, ¶¶197-198.

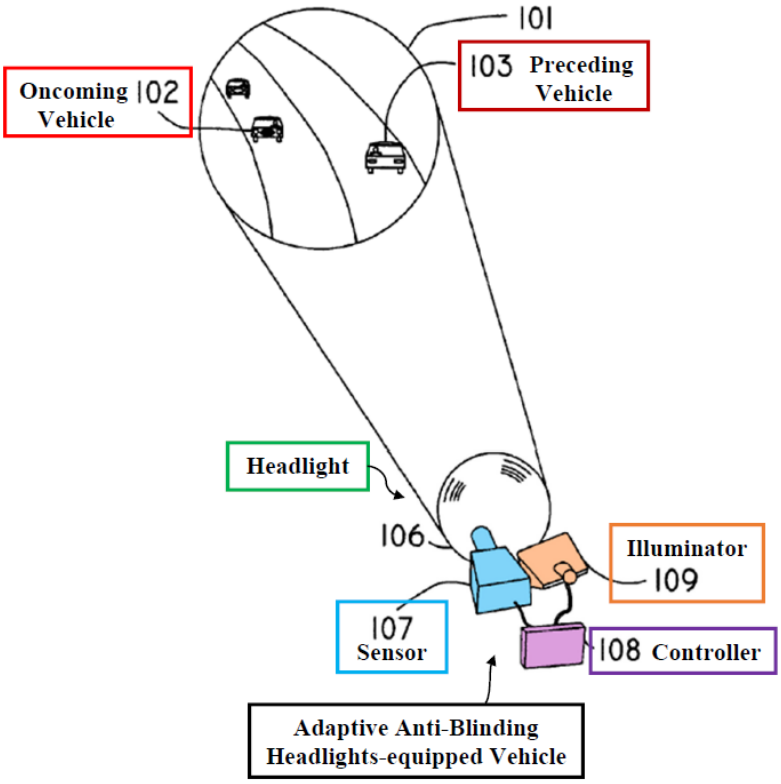


EX1005, FIG. 1 (annotated).

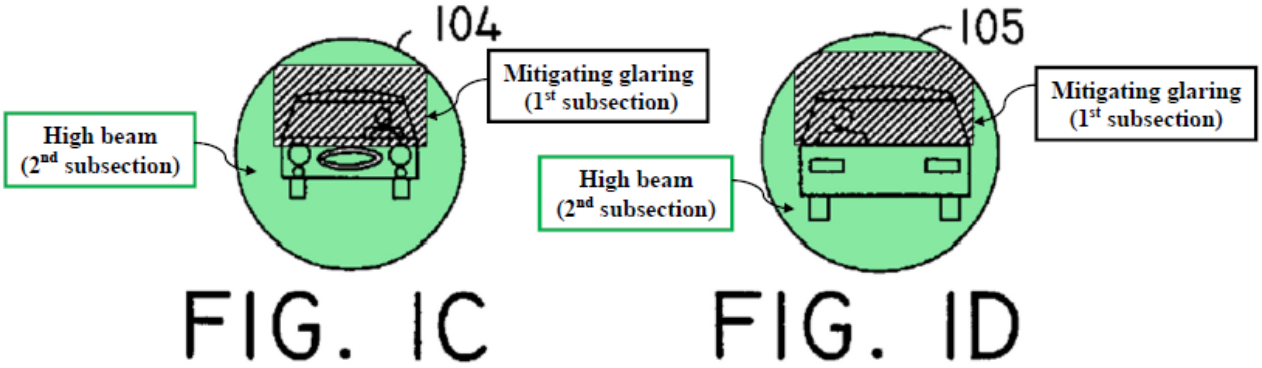


EX1005, FIGS. 1C-1D (annotated).

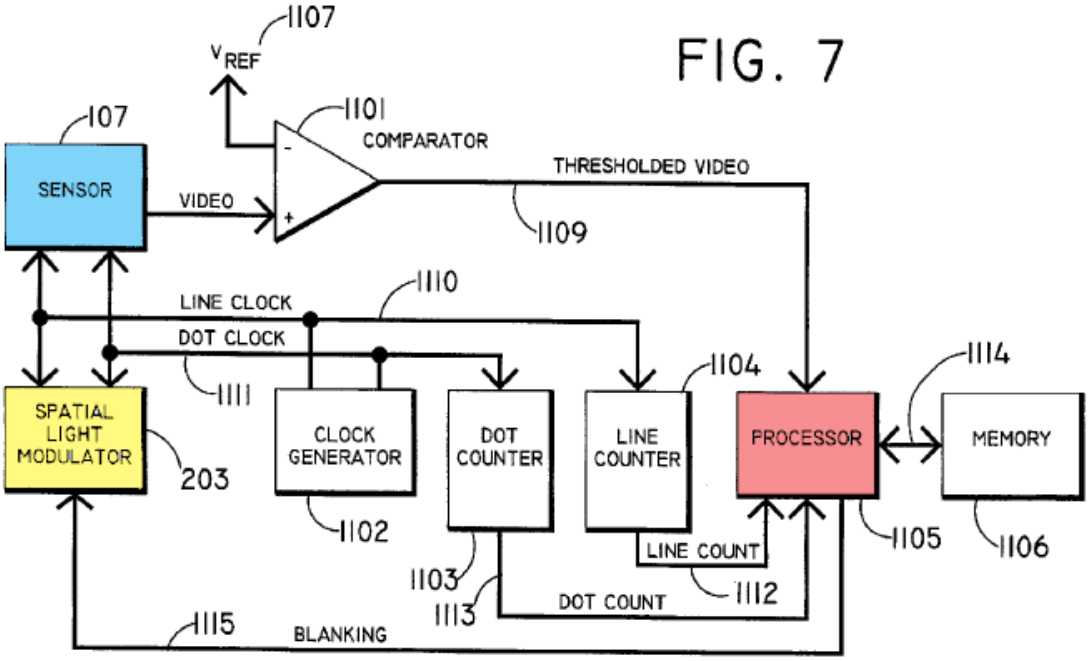


EX1005, FIG. 7 (annotated).

**11. [1.10]**

This step implements the steps of [1.8] and [1.9], where Beam's "controller module uses the *sensor spatial data (video)*…to *control the Illuminator*," according to the determined illumination. EX1005, 6:12-19, 5:34-54, FIGS. 1, 1C-1D, 7, 8:35-38, 5:61-65, 1:5-18, 4:10-25; EX1003, ¶¶144-170, 199-201; *see supra* Section V.B.3. Thus, Beam discloses "adapt[ing]…light-clusters" and "instruct[ing] operation of at least two…light clusters" to create the headlight beam. EX1003, ¶¶201-202.

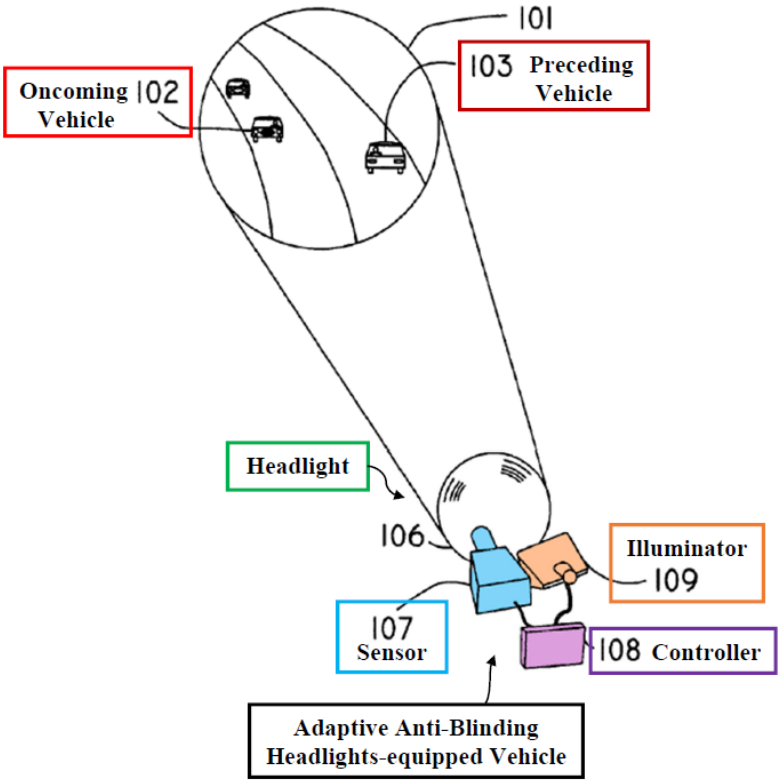


EX1005, FIG. 1 (annotated).

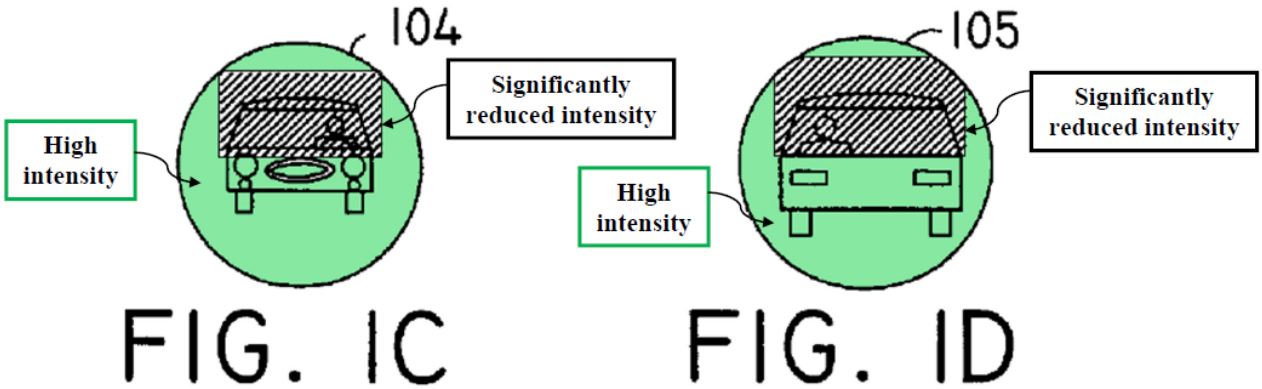


EX1005, FIGS. 1C-1D (annotated).

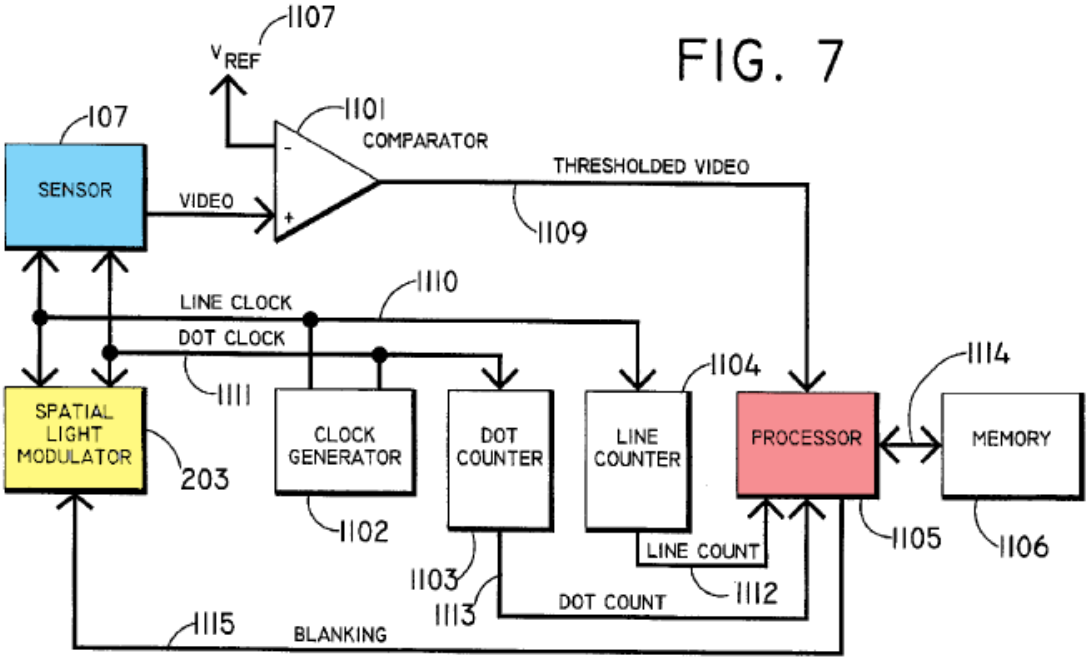


EX1005, FIG. 7 (annotated).

### C. Claim 2

#### 1. [2.1]

Beam's "spatial light modulator 203…[is] mounted on a *support 204*" and "*unitized housing* [501]…provide[s]…mechanical support…to maintain optical *alignment*." EX1005, 4:36-40, 5:17-28, FIGS. 2, 4-6, 8:4-17, 5:61-63, Abstract, 4:26-5:21, 1:5-18; EX1003, ¶203. Beam's "AABH units will be…*facing forward*." EX1005, 6:9-11; EX1003, ¶203. Simply, to be used as headlights, Beam's clusters aim forward. EX1005, 4:36-40, 5:17-28, 6:9-11, FIGS. 2, 5; EX1003, ¶¶203-204.

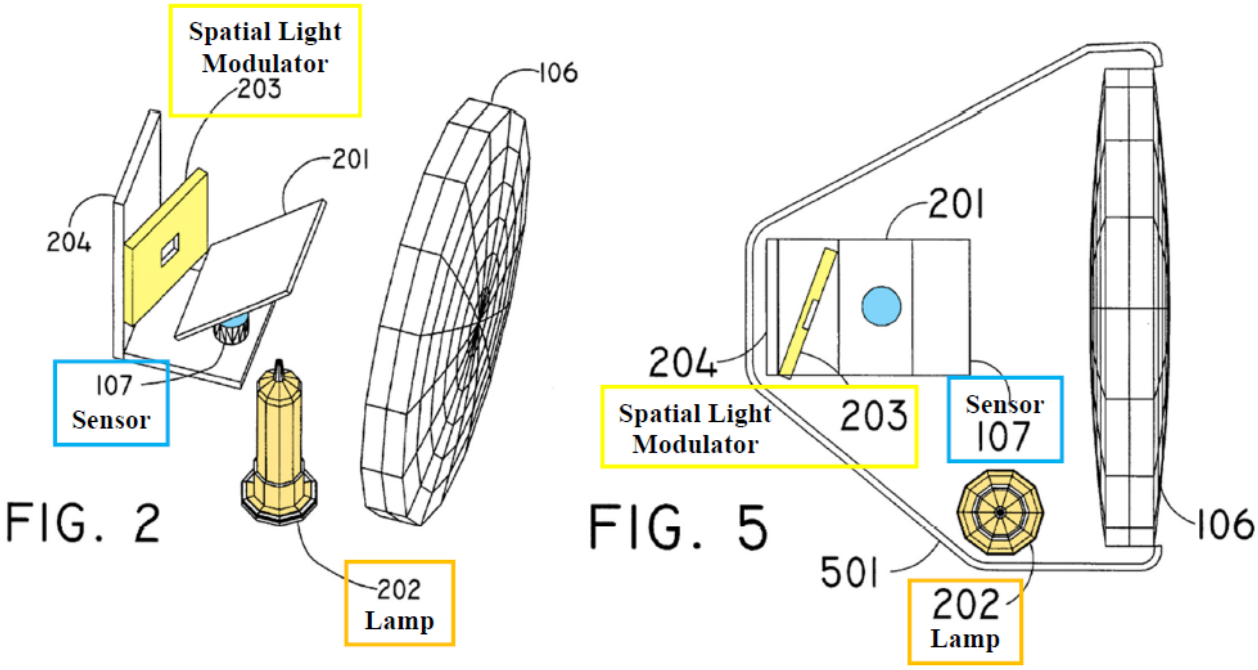


EX1005, FIGS. 2 and 5 (annotated).

**2. [2.2]**

Beam's "[c]ontroller 108…commands *reduction of the energy* of the microbeams." EX1005, 4:26-52, FIGS. 2, 5; EX1005, Abstract, 7:25-29, 8:4-34, 3:62-64, 5:3-16, FIGS. 4, 6; EX1003, ¶205. Thus, "intensity" is "a variable light-source characteristic." EX1003, ¶205; EX1001, 16:43-50, 2:28-30. Thus, Beam's lamp 202 (or Beam's LED array) is a "light emitting source[]…dependent on power" since intensity (brightness) of a lamp/LED changes based on the power (current) applied. EX1005, 5:3-21, 8:4-18, EX1003, ¶¶205-207.

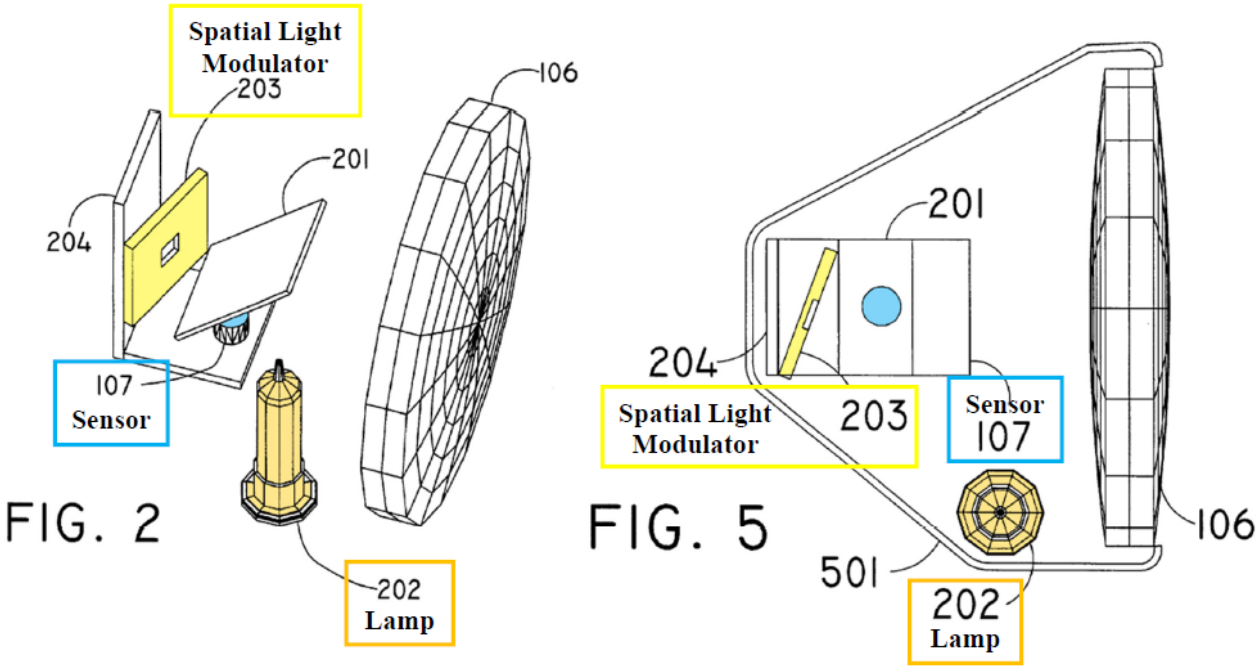


EX1005, FIGS. 2, 5 (annotated).

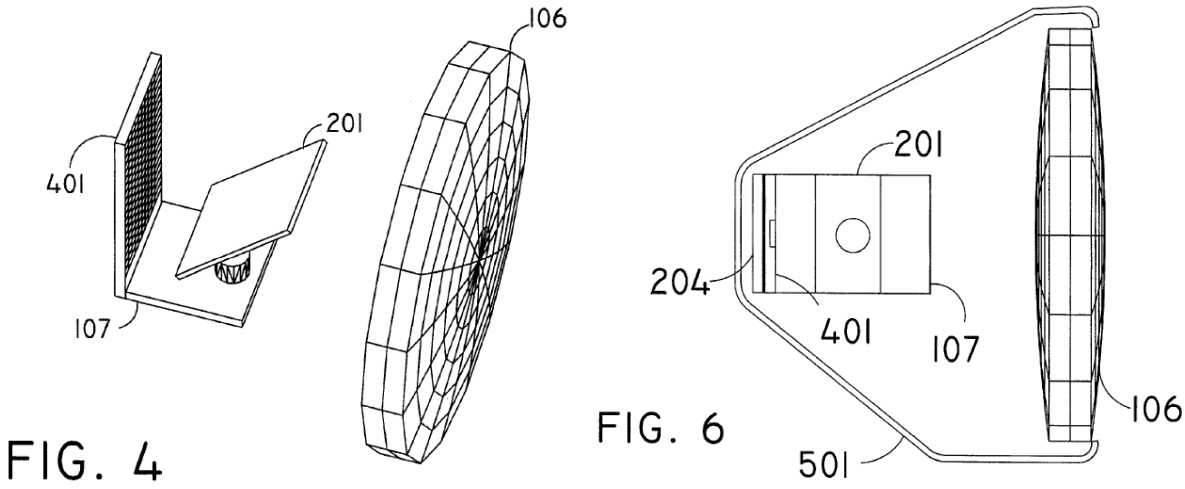


EX1005, FIGS. 4, 6.

**3. [2.3]**

Beam's "[r]ays from a lamp 202 fall on…*spatial light modulator 203*…where they are either *reflected* or *blanked*" and "[t]he *angular* position or *attenuation* of each…microbeam[] is independently set by the controller 108." EX1005, 4:26-52,

FIGS. 2, 4-6, Abstract, 7:25-29, 8:4-34, 3:62-64, 5:3-16; EX1003, ¶208. Thus, Beam's SLM 203 is a "light modifying element[]." EX1005, 5:3-21, 8:4-18, EX1003, ¶¶208-209. Beam's optical system 106 (bi-convex lens) and/or Beam-Thominet's lens 43, 46 of semiconductor source 10 (LED) is a "light modifying element[]." EX1005, 1:61-65, 4:10-59, 5:3-21, FIGS. 2-6; EX1006, ¶¶19, 29-31, FIGS. 1, 5-7; EX1003, ¶¶210-211.

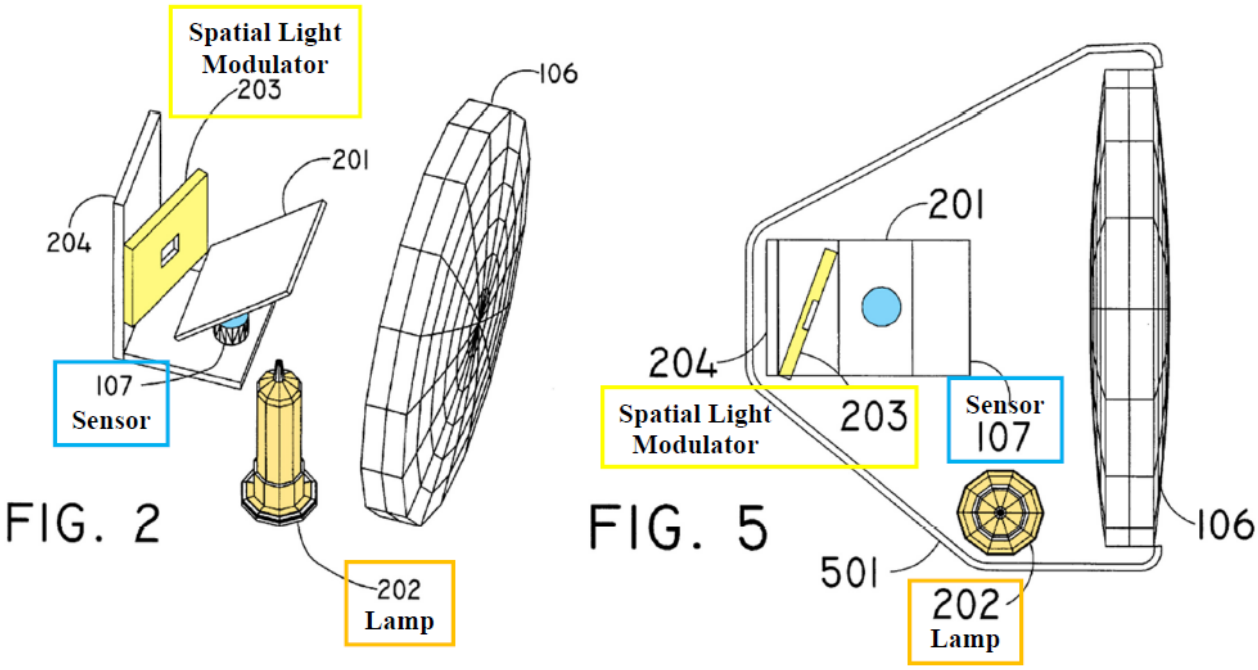


EX1005, FIGS. 2, 5 (annotated).

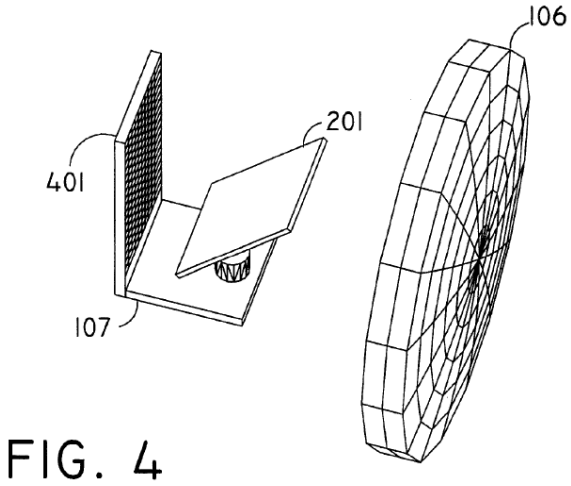


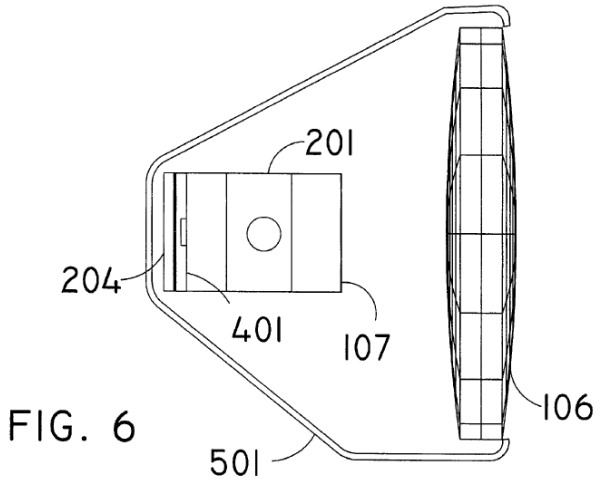


EX1005, FIGS. 4, 6.

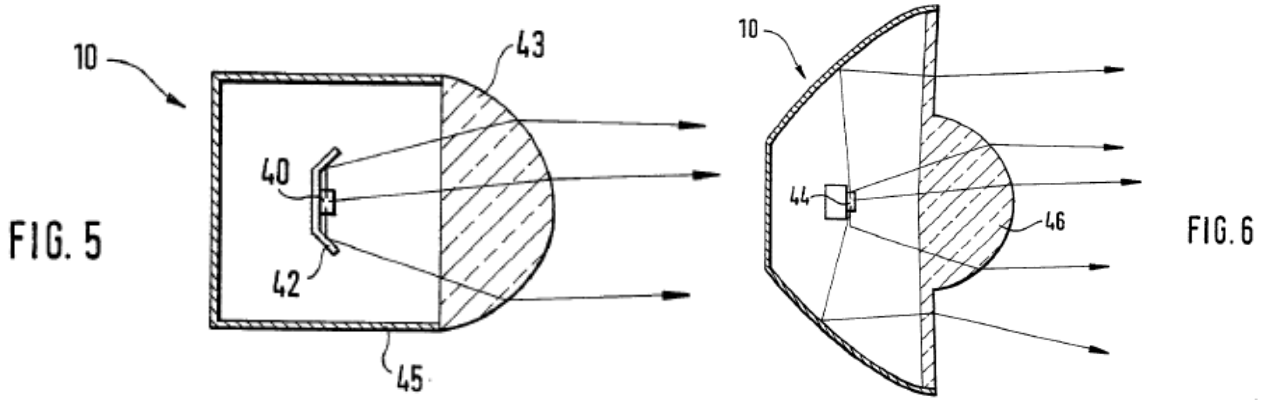


EX1006, FIGS. 5-6.

**4. [2.4]**

Beam's "[r]ays from a lamp 202 fall on…spatial light modulator 203, mounted on a support 104" and "[t]he *angular* position or *attenuation* of each…microbeam[] is independently set by the controller 108." EX1005, 4:26-52, FIGS. 2, 5, Abstract, 7:25-29, 8:4-34; EX1003, ¶212. Beam controls "the *intensity*, and/or the *angular position*, of one or more narrow-angle *microbeams*." EX1005, 5:61-65, Abstract, FIGS. 2, 5; 3:62-64, 5:3-16, 8:4-17, FIGS. 4, 6; EX1003, ¶212.

Thus, Beam provides "an emitted light-cluster light characteristic," for example, "direction," "intensity," or "spatial light distribution." EX1005, 5:3-21, 8:4-18, FIGS. 1C-1D; EX1003, ¶¶212-214.

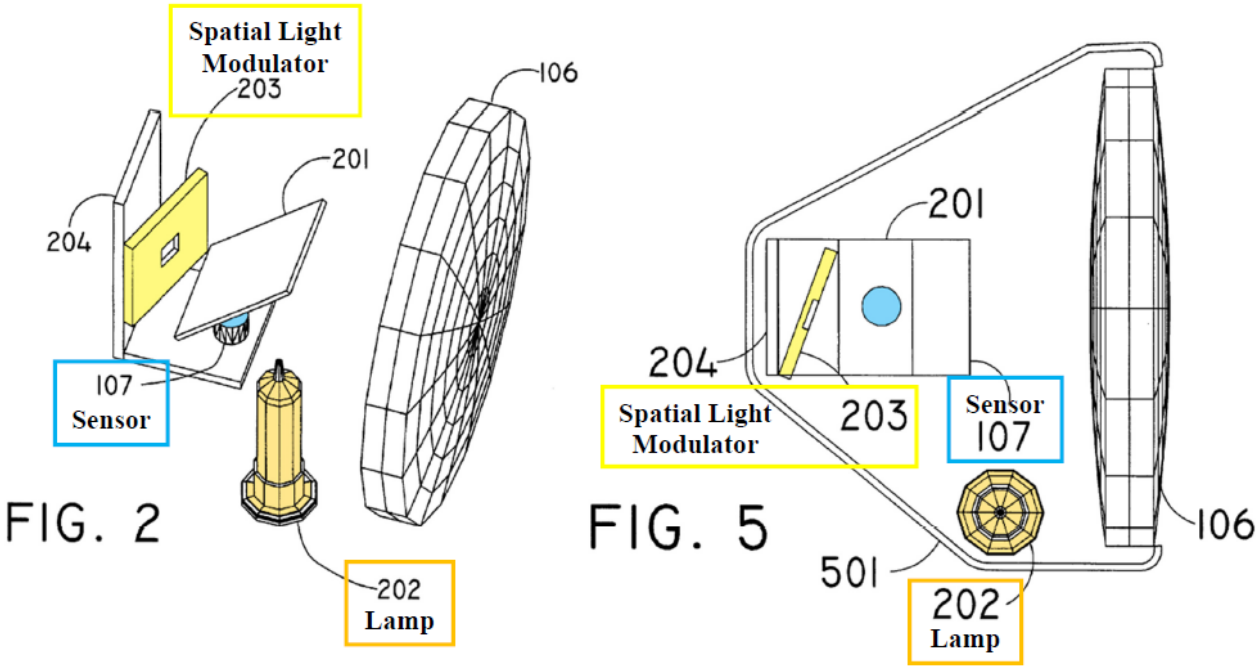


EX1005, FIGS. 2, 5 (annotated).

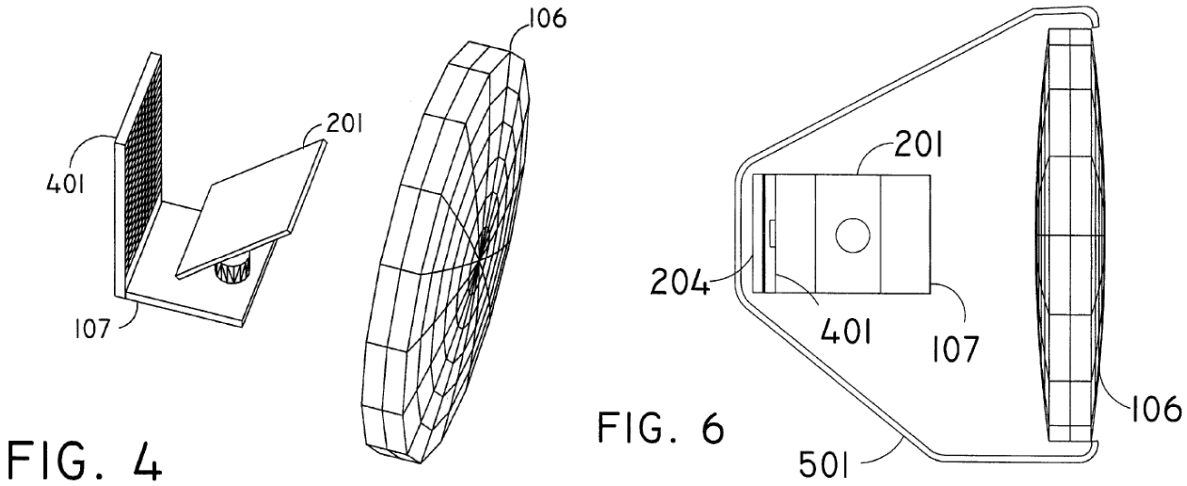


EX1005, FIGS. 4, 6.

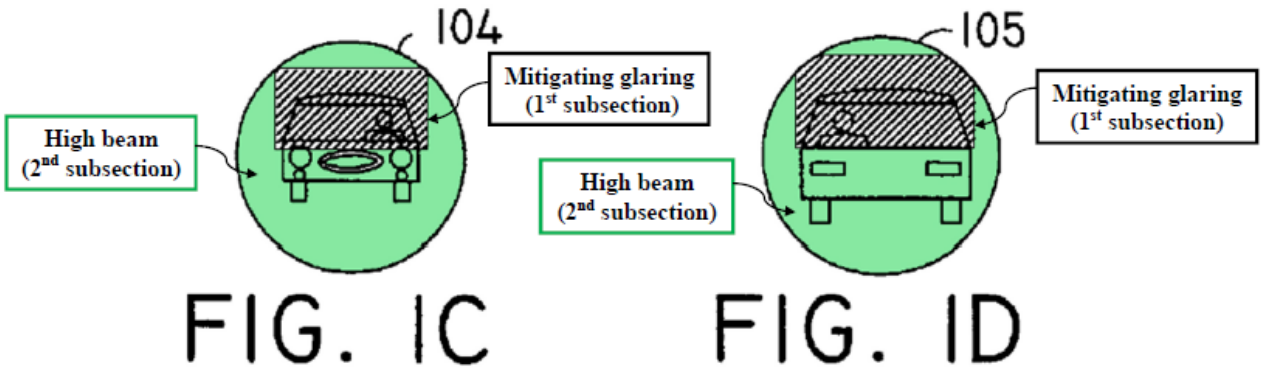


EX1005, FIGS. 1C-1D (annotated).

**D. Claim 3**

Beam's "[r]ays from…lamp 202 fall on…*spatial light modulator 203*…where they are…*reflected* through or blanked" and "*angular* position or *attenuation* of each…microbeam[] is independently set by the controller 108." EX1005, 4:26-52, FIGS. 2, 4-6, 8:4-34 ("*digital mirror devices*"), Abstract, 5:61-65, 7:25-29, 3:62-64, 5:3-16; EX1003, ¶215. Thus, Beam's SLM 203 is "a variable light modifier" with "reflectors" controlling the "light-cluster light characteristic," for example, "direction," "intensity," or "spatial light distribution." EX1005, 5:3-21, 8:4-18, EX1003, ¶¶215-216.

Thus, Beam's SLM 203 (digital mirror device) includes "variable light modifier control circuitry" to adjust the angular position/intensity of each modulator (mirror) in the array. EX1005, 5:33-54, 4:36-59, 8:4-17, FIGS. 1, 2, 4-7; EX1003, ¶216. Beam's optical system 106 (bi-convex lens) and/or Beam-Thominet's lens 43, 46 of semiconductor source 10 (LED) is "a static light modifier" with "refractors."

EX1005, 1:61-65, 4:10-59, 5:3-21, FIGS. 2-6; EX1006, ¶¶19, 29-31, FIGS. 1, 5-7;

EX1003, ¶¶217-218.

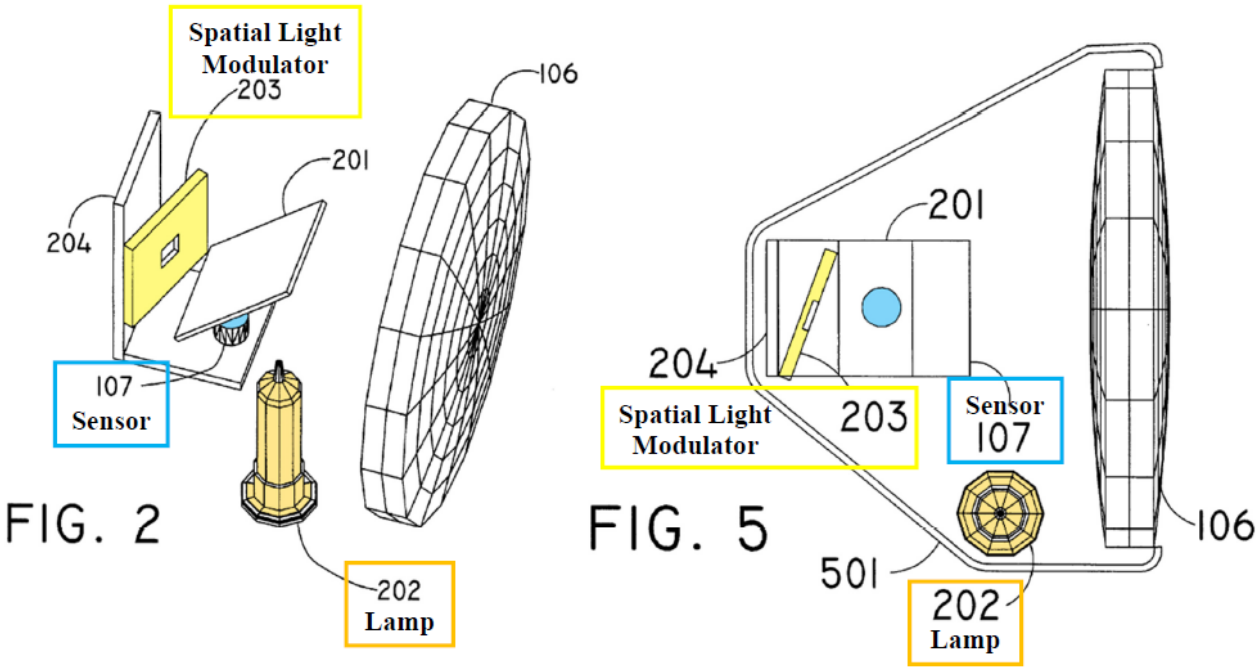


EX1005, FIGS. 2, 5 (annotated).

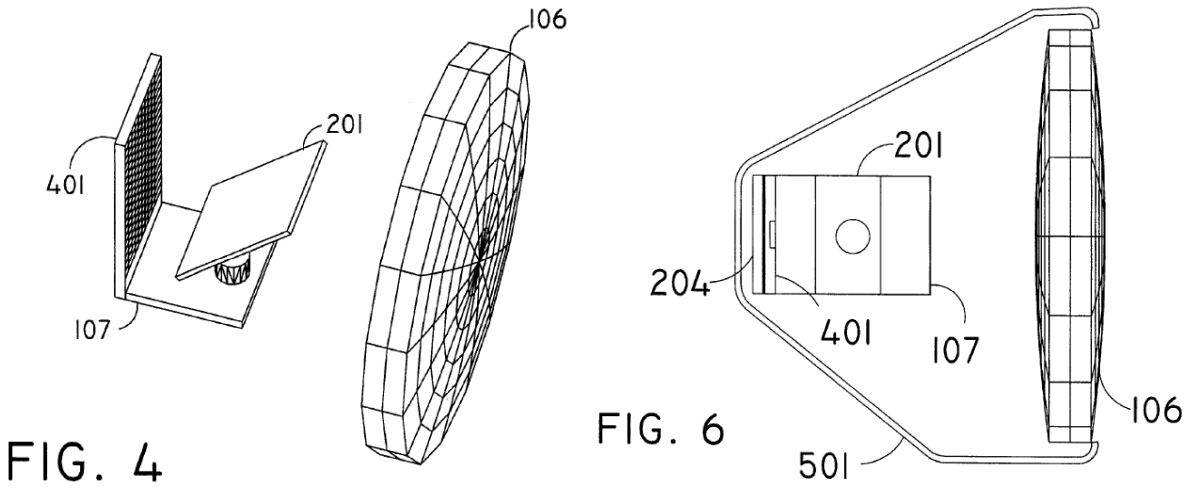


EX1005, FIGS. 4, 6.

### E. Claim 4

Beam's "*spatial light modulator*…[includes] *digital mirror devices*… *light valves*." EX1005, 8:4-34, FIGS. 2, 4-6, 4:26-52, Abstract, 5:61-65, 7:25-29, 3:62-64, 5:3-16. EX1003, ¶219. Thus, Beam's SLM 203 includes "optical devices." EX1005, 8:4-18, EX1003, ¶¶219-220. Beam's optical system 106 (bi-convex lens) and/or Beam-Thominet's lens 43, 46 includes "lenses" or "optical devices." EX1005, 1:61-65, 4:10-59, 5:3-21, FIGS. 2-6; EX1006, ¶¶19, 29-31, FIGS. 1, 5-7; EX1003, ¶¶221-222.

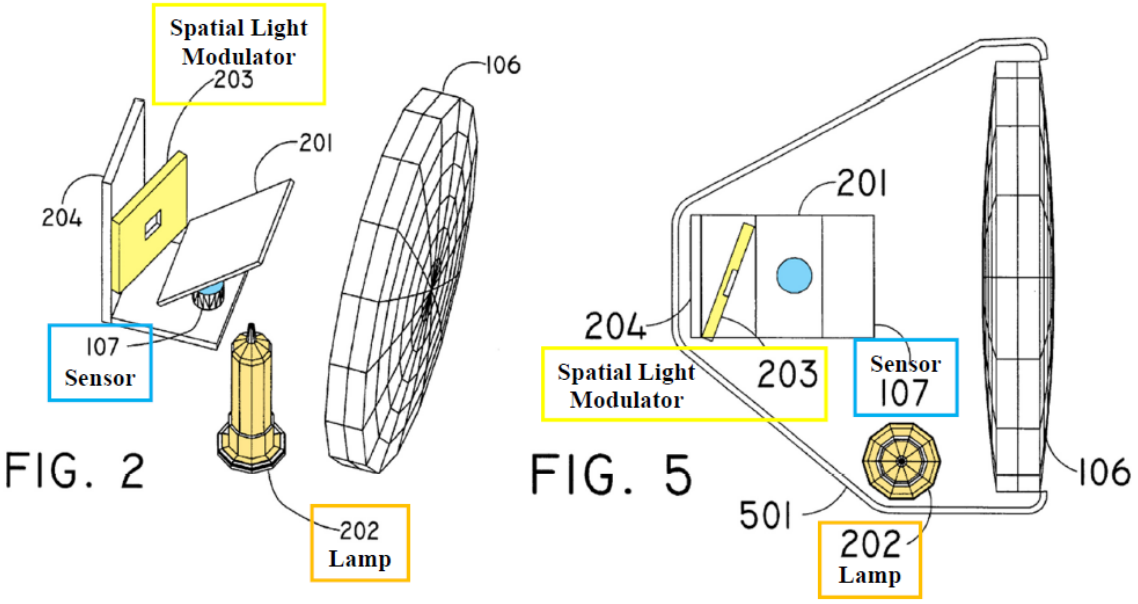


EX1005, FIGS. 2, 5 (annotated).

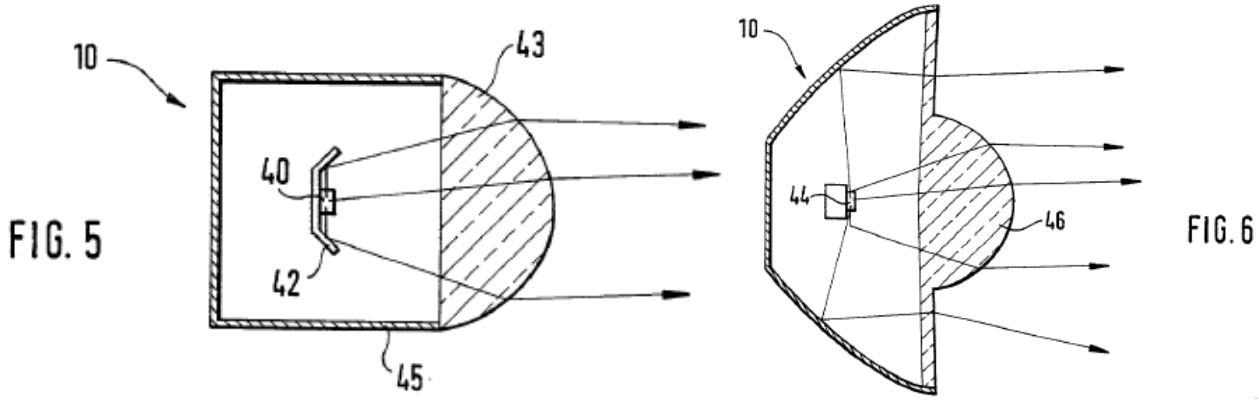


EX1006, FIGS. 5-6.

**F. Claim 5**

Beam's LEDs have the same functionality as lamp 202 and SLM 203. EX1005, 3:62-64, 5:3-16, FIGS. 2, 4-6, 8:4-17. EX1003, ¶¶223-224.

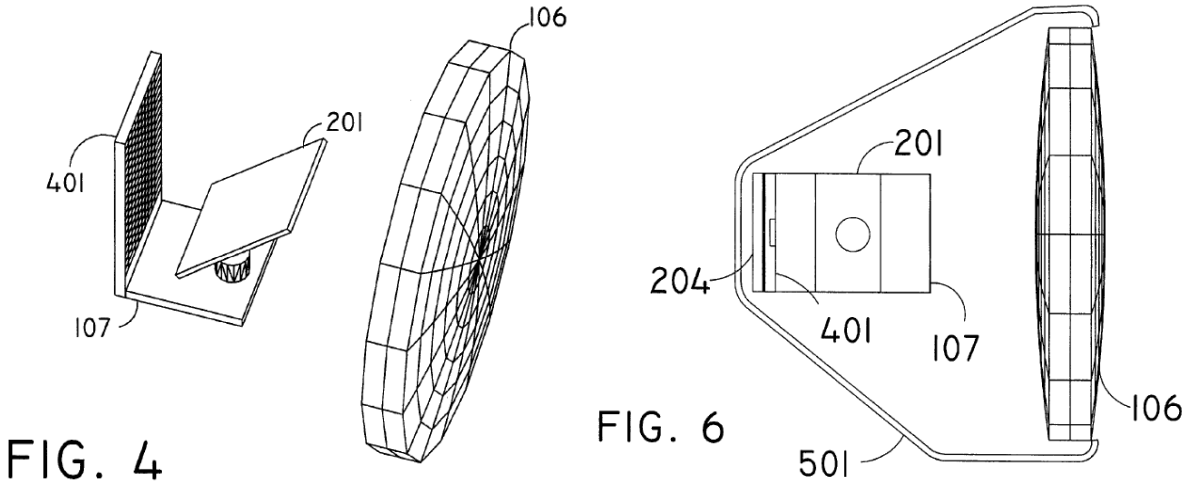


EX1005, FIGS. 4, 6.

Thominet's semiconductor light sources 10 are arranged in different beam regions 22, 24, 26, 28 (clusters) for different situations. EX1006, ¶¶7-8, 17-18, 21-29, FIGS. 1-3; EX1003, ¶225. Thominet's "different partial regions [22, 24, 26, 28]

emit light of *different colors*" and/or "a *mixture of the colors*." EX1006, ¶¶5, 26-29, claim 3, FIGS. 1B-2; EX1003, ¶225.

Thus, Beam-Thominet's LEDs each have "a spectral power distribution characteristic" (color) and that Beam-Thominet's controller provides different colors to different subsections. EX1006, ¶¶2-5, 26-29, FIGS. 1B-2; EX1005, 3:62-64, 5:3-16, FIGS. 2, 4-6; EX1003, ¶¶226-227.

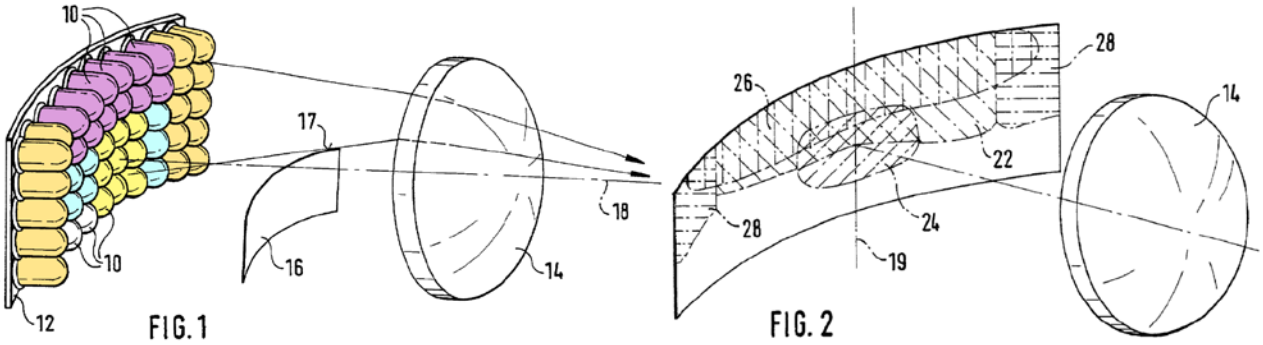


EX1006, FIGS. 1-2 (annotated).

*Supra* Section V.A; EX1003, ¶¶121-138, 228-238.

Thus, Beam-Thominet renders obvious claim 5. EX1003, ¶238.

**G. Claims 7/8[6]**

Beam's controller is "a logical controller." *Supra* Section V.B.8; EX1003, ¶¶187-190, 241. Beam's *sensor 107* (camera) detects oncoming headlights/preceding taillights and inputs data into processor 1105. EX1005, 4:10-36, 5:33-36, FIGS. 1-2, 5, 6:12-14, 7:37-40, 8:23-27; EX1003, ¶241. "*Processor*

[6] Claims 7-8 are patentably indistinct. EX1003, ¶¶239-240.

*1105* uses appropriate *algorithms* on the incoming data to *determine the locations to be blanked*." EX1005, 5:34-6:19, FIGS. 1, 1C-1D, 7, Abstract; EX1003, ¶241.

Thus, Beam's processor processes the data, indicates a vehicle, and uses algorithms to determine/track an area to be dimmed to "decrease at least one vision-disturbing characteristic," for example, glare or blinding. EX1005, 5:33-6:27, FIGS. 1C-1D; EX1003, ¶¶242-243.

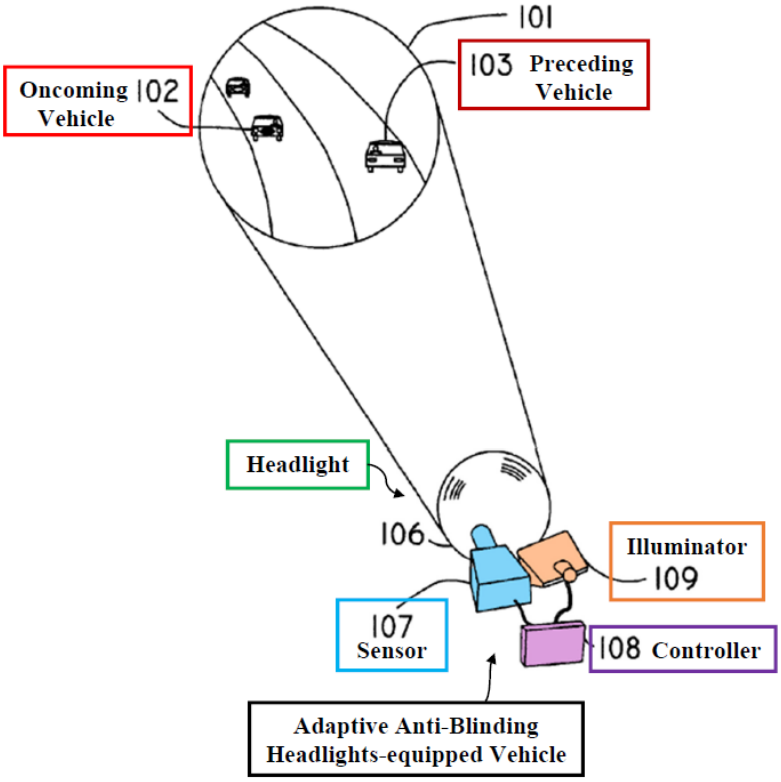


EX1005, FIG. 1 (annotated).

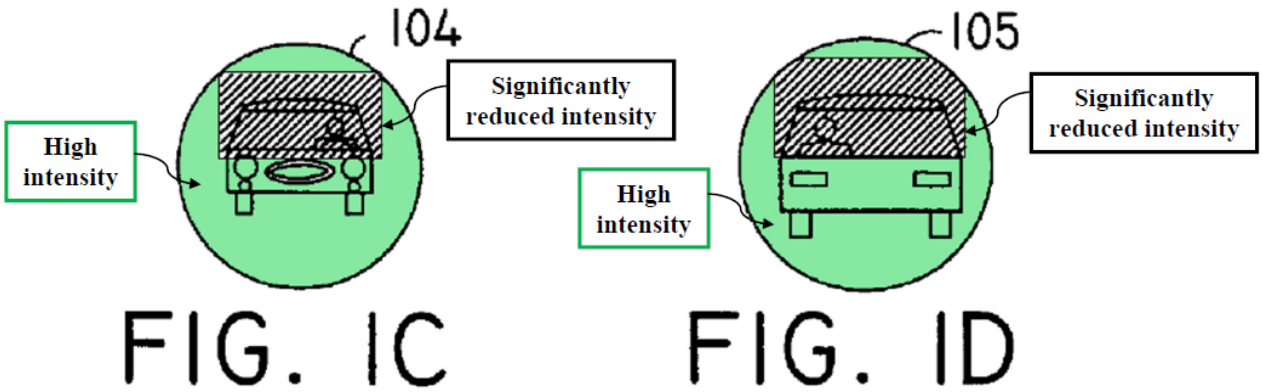


EX1005, FIGS. 1C-1D (annotated).

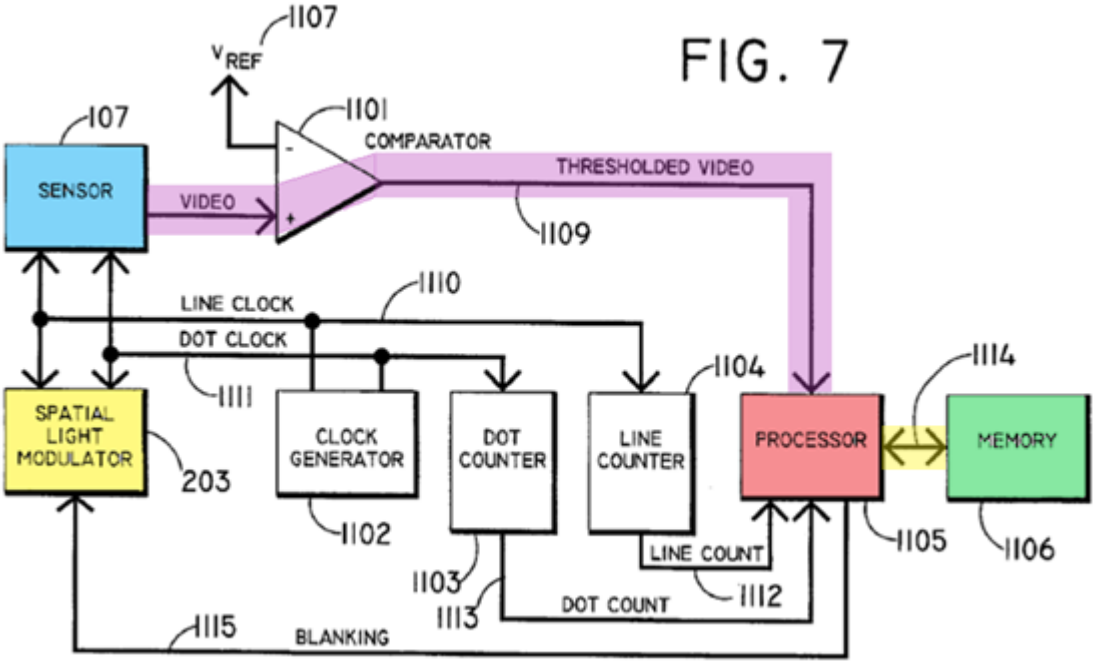


EX1005, FIG. 7 (annotated).

### H. Claim 10

Beam's *sensor 107 detects oncoming headlights/preceding taillights*. EX1005, 4:10-25, 5:33-35, FIGS. 1, 1A-1B, 2, 5, 6:12-14, 4:26-36, 8:23-27; EX1003, ¶¶244-245.

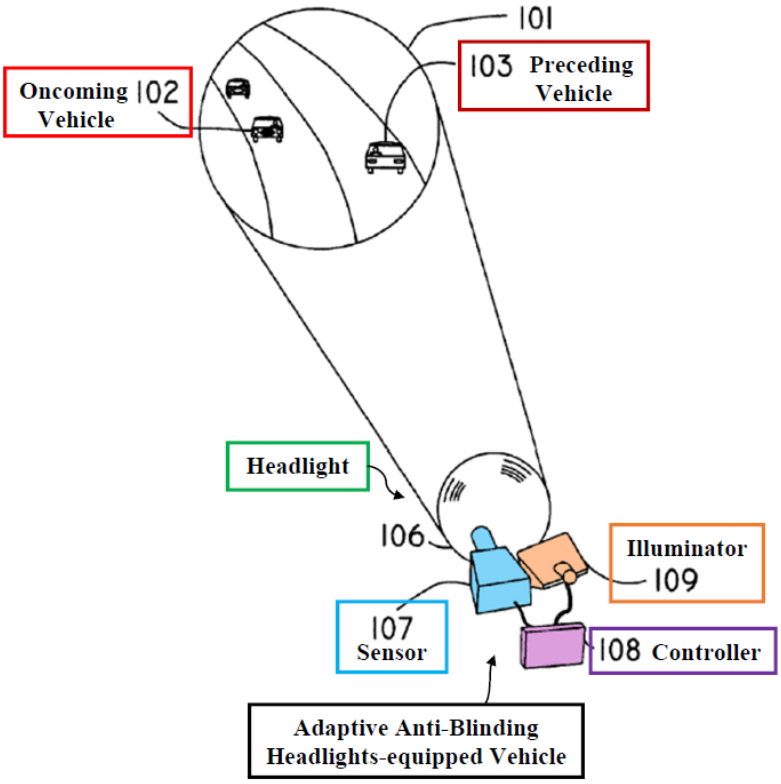


EX1005, FIG. 1 (annotated).

EX1005, FIGS. 1A-1B.

## I. Claim 11

Beam's controller is "a logical controller." *Supra* Section V.B.8; EX1003, ¶¶ 187-190, 246. Beam's processor qualifies as/includes "a computer vis[i]on processing unit" because Beam's processor uses the sensor data and appropriate

algorithms to identify vehicles. EX1005, 4:10-25, 5:33-54, 6:12-27, FIGS. 1C-1D; EX1003, ¶¶246-249; EX1001, 63:37-45 ("computer vision methodologies *known in the art*"). Beam's *sensor 107* detects headlights/taillights of an oncoming/preceding *vehicle* 102, 103, thereby identifying it via processor 1105, and "*[p]rocessor 1105* uses appropriate *algorithms* on the incoming data to *determine the locations to be blanked*," thereby changing illumination of the identified vehicle. EX1005, 4:10-25, 5:33-6:19, FIGS. 1, 1C-1D, 7, Abstract; EX1003, ¶¶246-250.

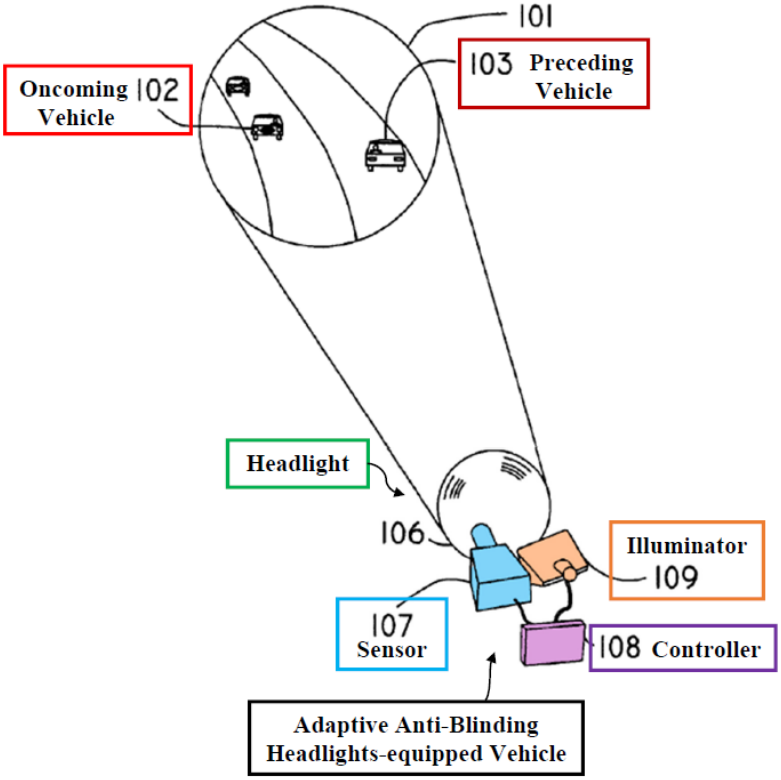


EX1005, FIG. 1 (annotated).

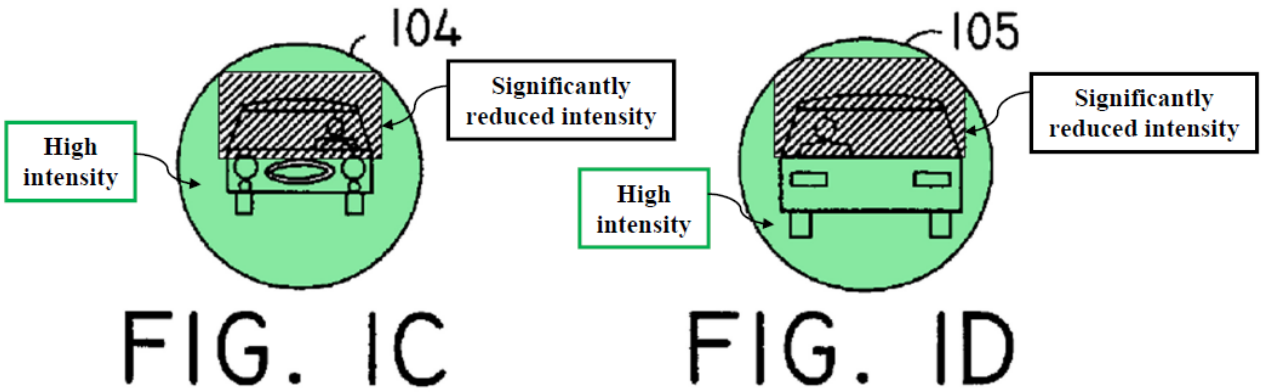


EX1005, FIGS. 1C-1D (annotated).

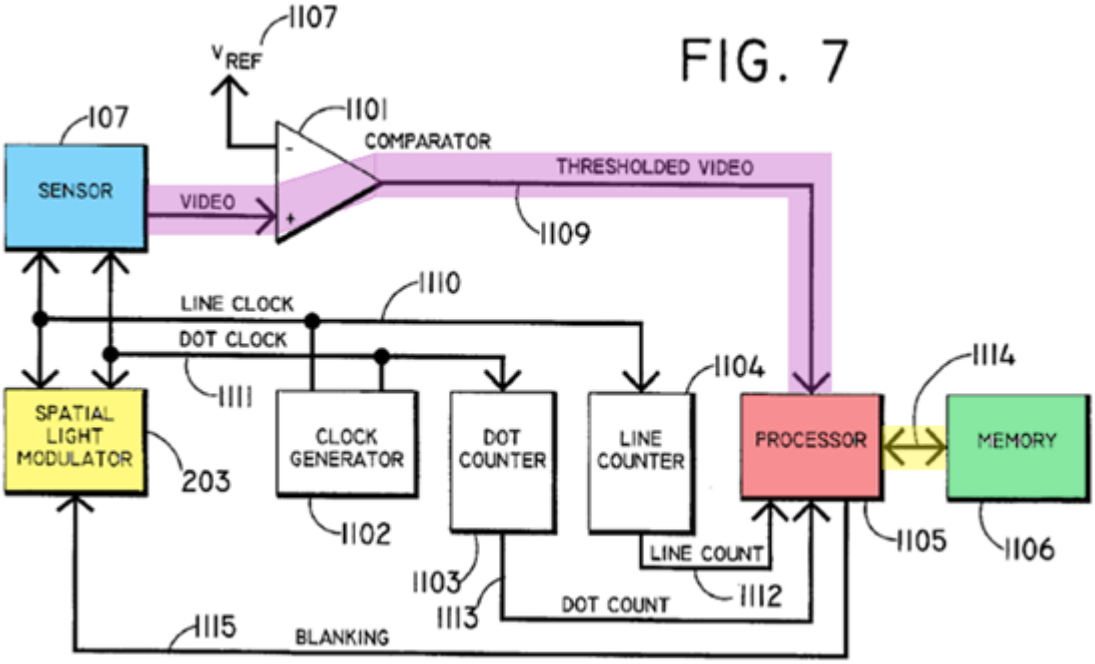


EX1005, FIG. 7 (computer vision) (annotated).

### J. Claim 12

*See supra* Section V.B.9; EX1003, ¶¶191-195, 251. Beam's "area…that would *dazzle* the driver," is *darkened*, while "maintaining *f[u]ll intensity elsewhere*." EX1005, 3:19-24, 2:59-3:3, FIGS. 1, 1C-1D, 7, 5:33-54, Abstract, 6:14-19, 5:65-6:4, 8:23-38, 1:5-18, 4:10-25, 5:13-15; EX1003, ¶¶251-252. This results in

dimmed light within a first subsection to "mitigat[e] glaring," and illumination with "higher visibility" within a second subsection. EX1005, 5:33-54, 6:12-27, FIGS. 1C-1D; EX1003, ¶¶253-254.

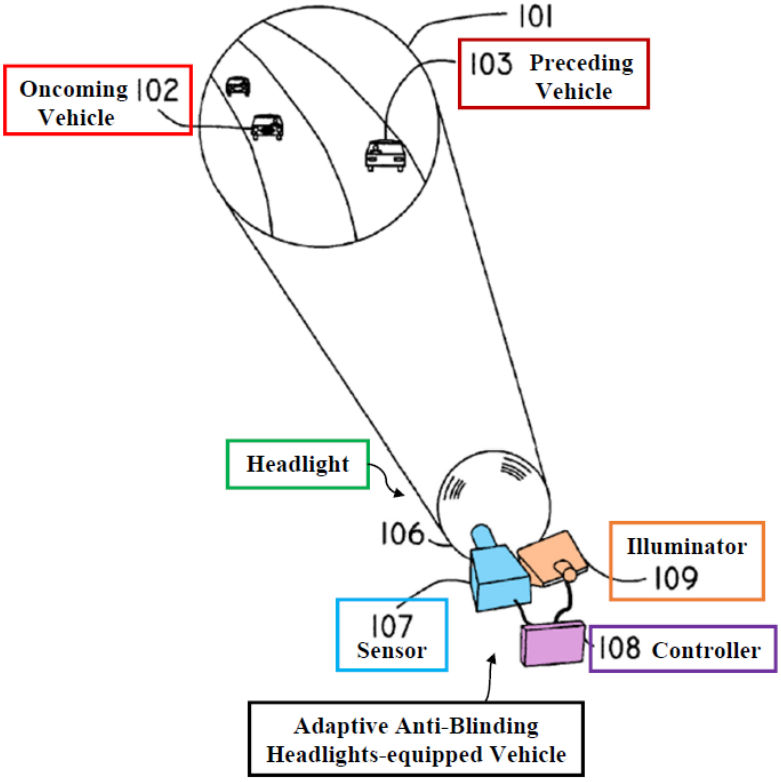


EX1005, FIG. 1 (annotated).

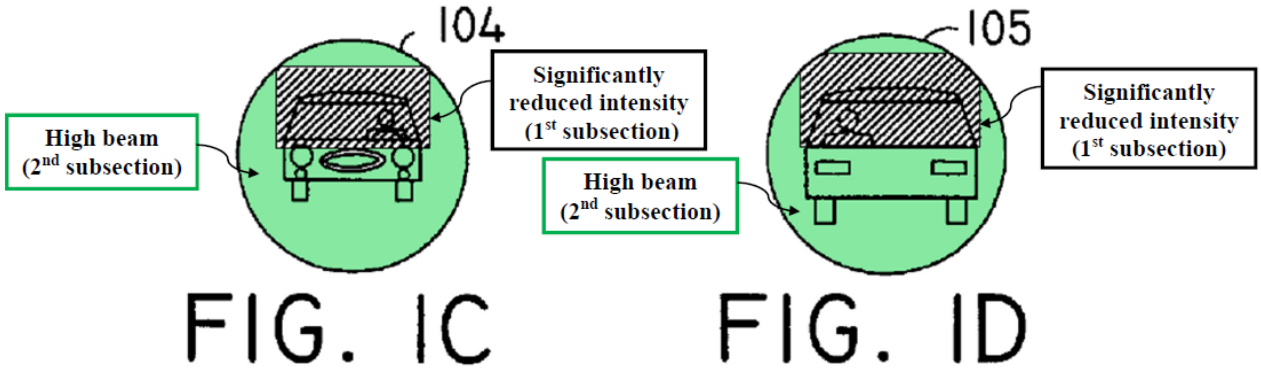


EX1005, FIGS. 1C-1D (annotated).

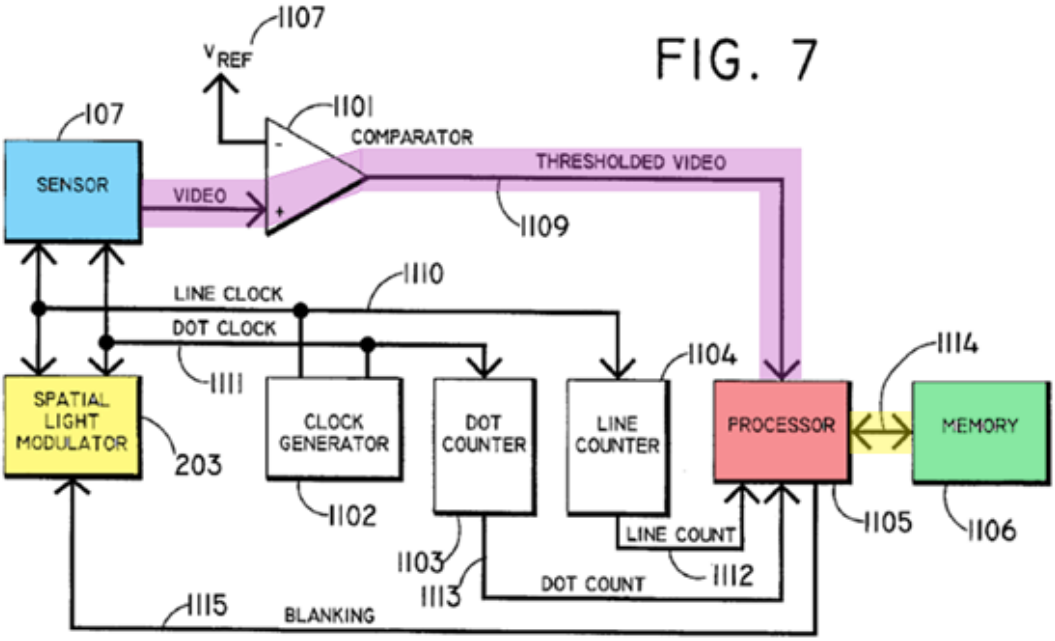


EX1005, FIG. 7 (annotated).

### K. Claim 13

Beam's illumination in non-shaded areas is "a *much higher brightness beam*" and "the area…dazzl[ing] the driver will be darkened, *while maintaining f[u]ll intensity elsewhere*." EX1005, 2:59-3:24, FIGS. 1, 1C-1D, 7, 6:11-44, 1:5-18; EX1003, ¶255. This "provide[s] high-beam illumination" in the second subsection "without diminishing a range of the high-beam illumination." EX1003, ¶¶255-256.

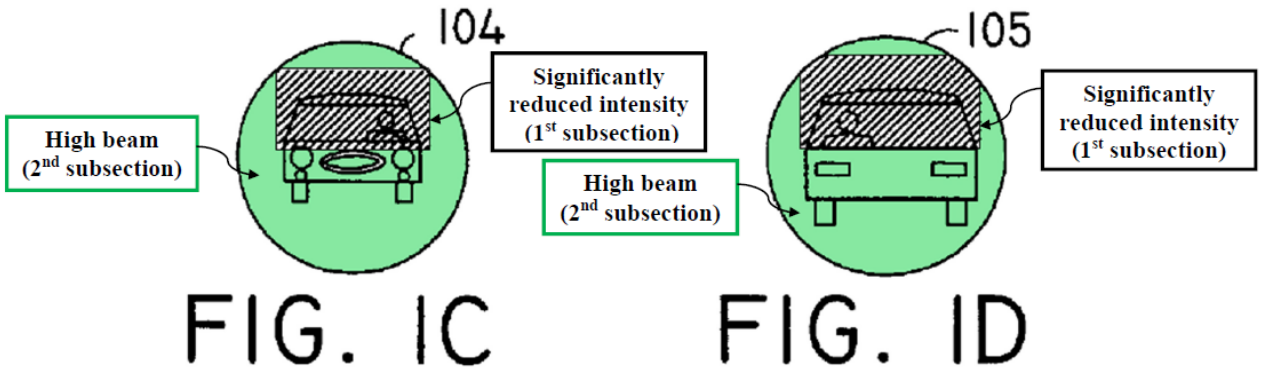


EX1005, FIGS. 1C-1D (annotated).

### L. Claim 14

Beam's *sensor 107* is "a camera." EX1005, 4:10-36, 5:33-36, FIGS. 1-2, 5, 6:12-14, 7:37-40, 8:23-27; EX1003, ¶257. Additionally, Beam's *radar sensor 301* constitutes "an electromagnetic radiation source and detector including…light." EX1005, 4:60-5:2, 4:10-5:16, 8:4-17, FIGS. 1-7; EX1003, ¶¶258-259.

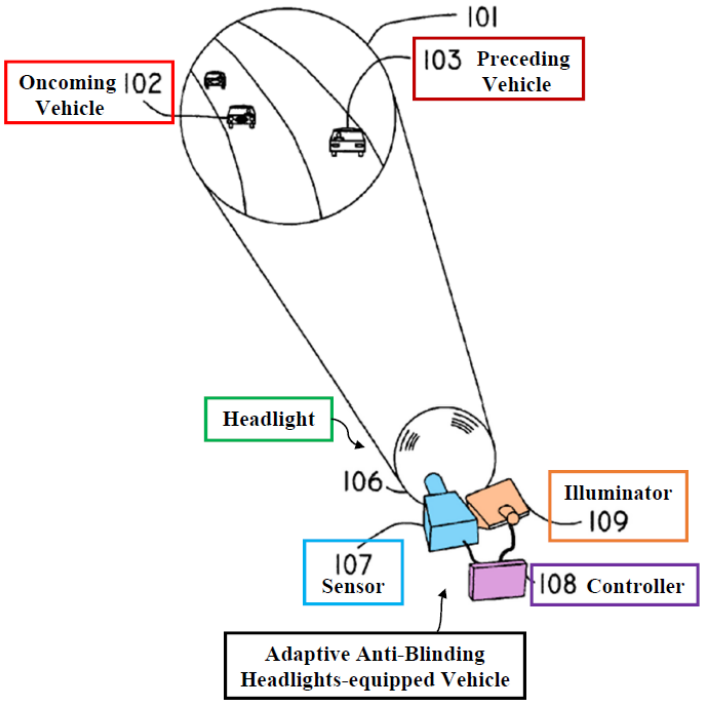


EX1005, FIG. 1 (annotated).

### M. Claim 18

Beam's light source includes "light-emitting *diodes*" and "*lasers*." EX1005, 8:13-18, 5:3-16. Thus, a POSA would have understood Beam discloses "a laser diode." EX1003, ¶260.

Thominet discloses "*laser diodes*." EX1006, ¶28, FIGS. 1-2; EX1003, ¶¶261-262. A POSA would have been motivated to combine Thominet with Beam with a

reasonable expectation of success, as a simple substitution of one known prior art element for another. *KSR* at 416-418; EX1003, ¶¶263-264.

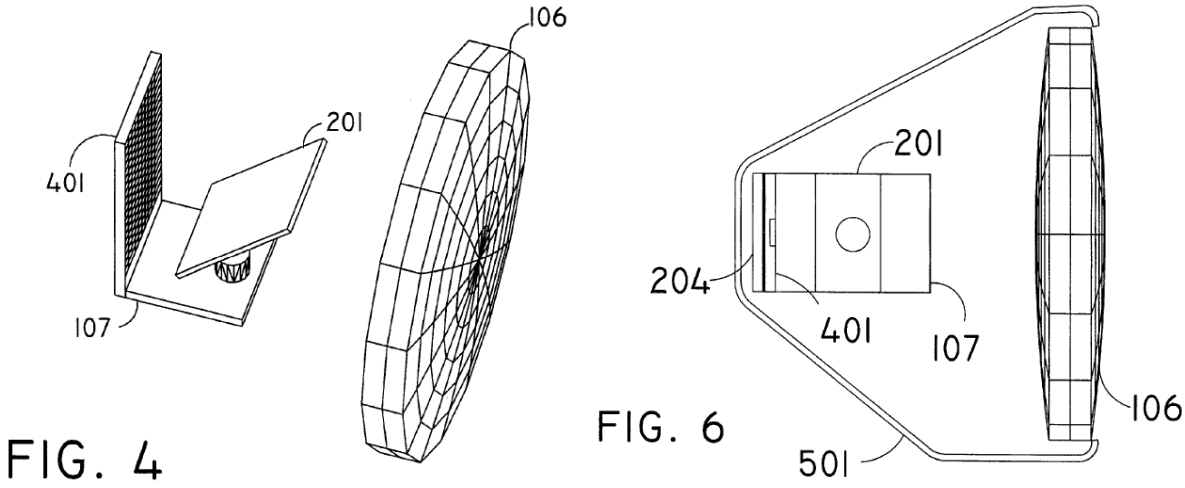


EX1005, FIGS. 4 and 6.

**N. Claim 19**

Beam's "*spatial light modulator*…[includes] digital mirror devices" and "an optical system 106" (e.g., a bi-convex lens). EX1005, 8:4-12, FIGS. 2, 5, 1:61-65 ("a *reflector* or *lens*"), 4:10-5:21; EX1003, ¶¶265-267.

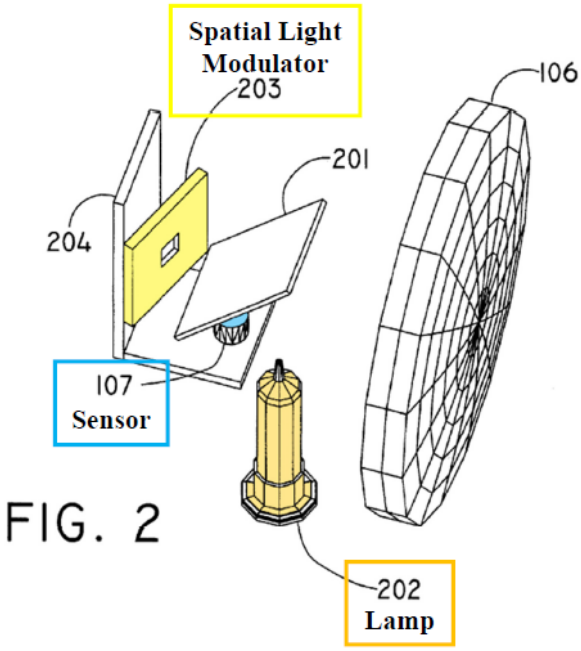


FIG. 2

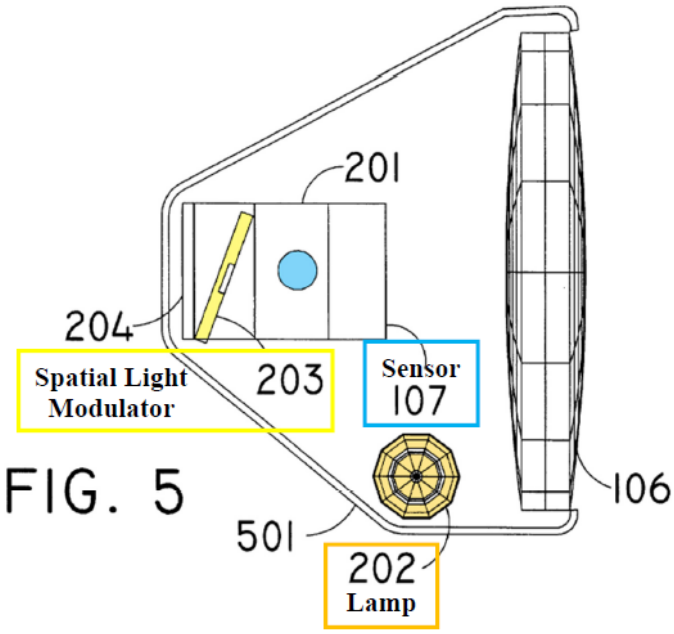


FIG. 5

EX1005, FIGS. 2, 5 (annotated).

## VI. GROUND 2: THE COMBINATION OF BEAM, THOMINET, AND STAM RENDERS OBVIOUS CLAIMS 37-45, 47-48, 50-53, AND 57-58.

Beam/Beam-Thominet disclose claims 37-45, 47-48, 50-53, and 57-58 as explained below. To avoid doubt, Beam-Thominet is combined with Stam, for [37.8] and [37.9]—outputting light above or below a predefined threshold. EX1003, ¶¶75-94, 268.

Beam's "*default* illumination level will be the equivalent of today's *low beams*." EX1005, 6:30-33. Thus, Beam's system includes a "predefined" illuminance—a "low beam" illuminance. EX1003, ¶¶269-270. Illumination in shaded areas is "*significantly less* than with current *low beams*" (significantly reduced intensity in shaded area is *below* Beam's predefined *low beam* illuminance: <u>shaded illuminance < low beam illuminance</u>); and illumination in non-shaded areas

is "at *maximum* intensity" and "like having bright *high beams*" (high intensity in non-shaded area is *above* Beam's predefined *low beam* illuminance: <u>non-shaded illuminance > low beam illuminance</u>). EX1005, 6:30-33, 2:59-3:3, 6:11-12, 6:40-44, FIGS. 1, 1C-1D; EX1003, ¶271.

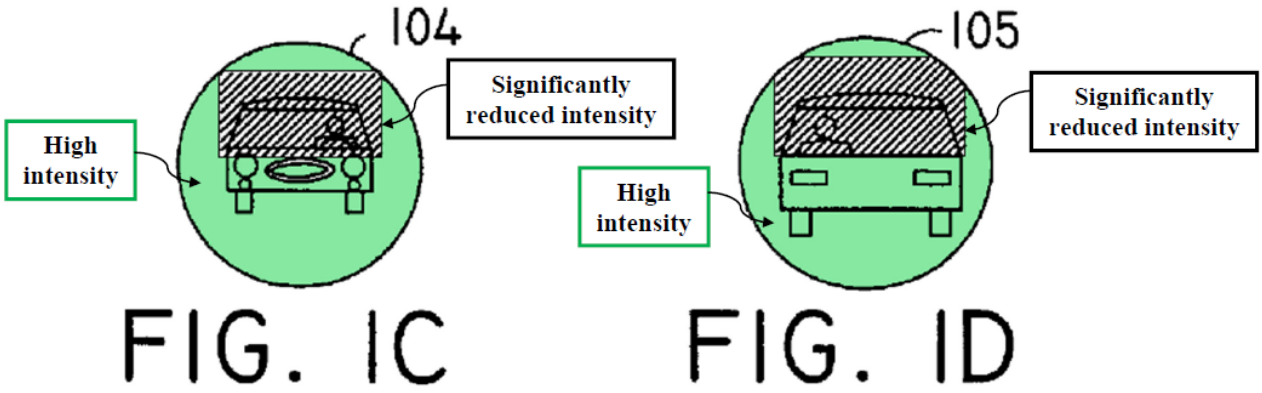


EX1005, FIGS. 1C-1D (annotated).

Thus, Beam discloses a "predefined" (low beam) illuminance and outputting illumination "below…[the] predefined threshold" and "above…[the] predefined threshold" (<u>shaded < low beam < non-shaded</u>) as in [37.8] and [37.9]. EX1003, ¶272.

If Patent Owner argues, incorrectly, Beam does not disclose [37.8] and [37.9], Stam does. *Id.*, ¶¶273-274.

### A. A POSA would have been motivated to combine Beam, Thominet, and Stam with a reasonable expectation of success.

Stam provides a specific "predefined threshold" value based on a dimmed illuminance to reduce glare. *Id.*, ¶¶90-94, 275. It would have been obvious to a POSA designing an adaptive headlamp to implement Stam's predefined (dimmed)

illuminance value in Beam-Thominet, to further control an intensity of Beam's directional microbeams to prevent glare. *Id.*, ¶275; EX1005, 3:8-14, 3:37-45, 5:33-54, 7:1-13.

Stam emphasizes safety. EX1003, ¶276; EX1005, 3:8-45, 5:33-54, 6:53-7:13; EX1007, 1:14-31. In fact, Stam explains there are laws and regulations governing the amount of glare experienced by drivers. EX1007, 1:14-31, 9:12-10:8, Abstract, 58:11-33; EX1003, ¶¶90-94, 276.

*First*, including a predefined value for Beam-Thominet's controller—Stam's *technique*—would have further enhanced Beam-Thominet by outputting illuminance *relative to* the predefined value (below or above), preventing glare to other vehicles. EX1003, ¶277. *Second*, a POSA would have sought to incorporate this *known feature* of Stam (a predefined dimmed illuminance, *see* EX1007, Abstract, 1:14-31, 9:12-10:8) into Beam (with controller 108 and/or illuminator 109). *Id.*, ¶277. This would have provided a specific "predefined" illuminance, below and above which to adjust illumination for desired areas. *Id.*

A POSA would have understood that a predefined value for Beam-Thominet's controller/illuminator based on Stam's predefined dimmed illuminance (0.1 fc within 700 ft), would have provided greater illumination control *referenced to* a predefined value to prevent glare and increase illumination to other areas. *Id.*, ¶278. This would have been applying Stam's *known technique* (a predefined

dimmed illuminance) to Beam-Thominet's similar, known device (dynamic headlamp with controllable beams), in the same way. *Id.*, ¶278; *KSR* at 417. Stam's known technique is fully described along with its benefits; thus, a POSA would have readily applied it to similar systems, such as Beam-Thominet's, in the same way. EX1003, ¶278; *KSR* at 419-421.

This modification would have been combining prior-art elements (Beam-Thominet's adaptive, direction-controllable headlamps and Stam's predefined dimmed illuminance) according to known methods (disclosed in Beam-Thominet and Stam) to yield predictable results (reduced glare). EX1003, ¶279; *KSR* at 415-416.

A POSA would have had a reasonable expectation of success combining Beam-Thominet and Stam, for example, by storing a specific dimmed illuminance value in memory of Beam-Thominet's controller/processor to output Beam's headlamp illumination below and above that value for respective illumination areas. EX1003, ¶280. This would have been routine and well within a POSA's skill due to the similaities in Beam-Thominet's and Stam's adaptive systems—their common components were well-known and there would have been no limitations for a POSA to make such a modification. *Id.*, ¶¶280-281.

## B. Independent Claim 37[7]

### 1. [37.P]

[37.P] is identical to [1.P]. *Supra* Section V.B.1; EX1003, ¶¶282-283.

### 2. [37.1]

[37.1] is patentably indistinct from [1.1]. *Supra* Section V.B.2; EX1003, ¶¶284-285.

### 3. [37.2]

[37.2] is patentably indistinct from [1.2]. *Supra* Section V.B.3; EX1003, ¶¶144-170, 286-313.

### 4. [37.3]

[37.3] is patentably indistinct from [1.3]. *Supra* Section V.B.4; EX1003, ¶¶314-316.

### 5. [37.4]

[37.4] is patentably indistinct from [1.4]. *Supra* Section V.B.5; EX1003, ¶¶175-179, 317-319.

---

[7] Claim 37 and claim 1 recite many identical elements or elements that are so technically similar that corresponding elements are patentably indistinct, even where the claim elements may be worded slightly different. (*See* Appendix A.) Patentably indistinct elements are elements for which the same prior art disclosure is applicable; substantive differences are explained, if needed. EX1003, ¶282.

**6. [37.5]**

[37.5] is patentably indistinct from [1.6]. *Supra* Section V.B.7; EX1003, ¶¶320-322.

**7. [37.6]**

[37.6] is patentably indistinct from [1.6]. *Supra* Section V.B.7; EX1003, ¶¶323-325.

**8. [37.7]**

[37.7] is patentably indistinct from [1.8]. *Supra* Section V.B.9; EX1003, ¶¶326-328.

**9. [37.8]**

Beam discloses [37.8]. *Supra* Sections VI/VI.A; EX1003, ¶¶268-280, 329-332; EX1005, 6:30-33, 2:59-3:3, FIGS. 1, 1C-1D, 7, Abstract, 4:20-25.

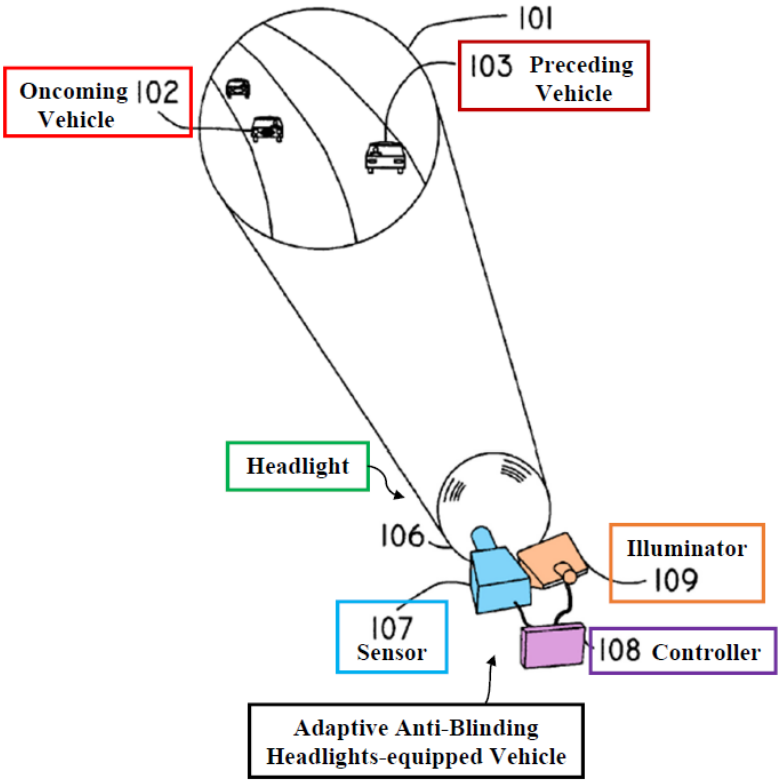


EX1005, FIG. 1 (annotated).

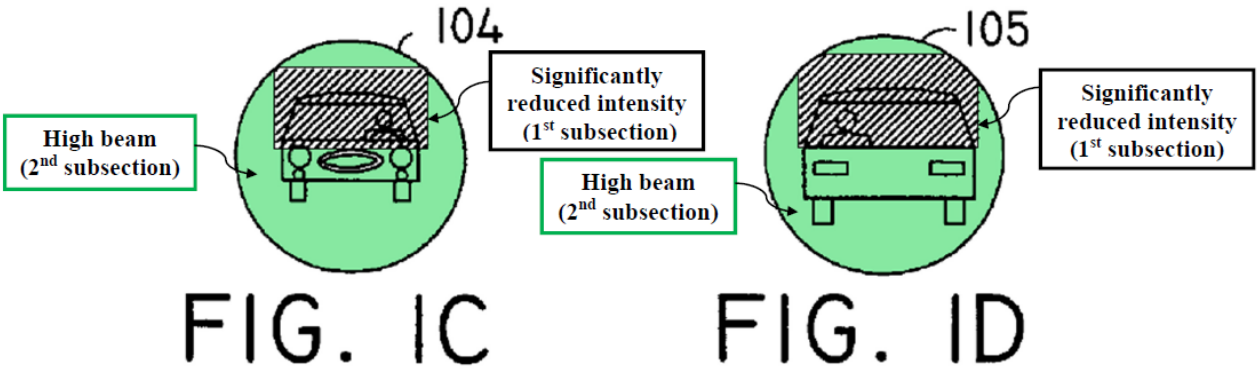


EX1005, FIGS. 1C-1D (annotated).

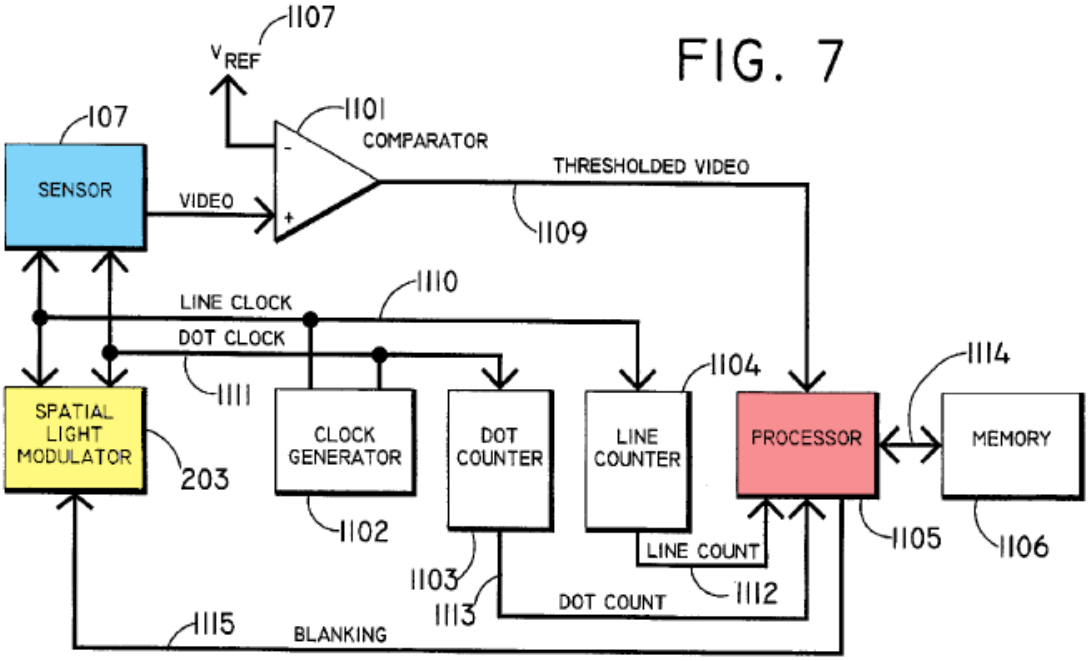


EX1005, FIG. 7 (annotated).

If Patent Owner argues, incorrectly, Beam-Thominet does not disclose [37.8], Stam does. EX1003, ¶333.

Stam discloses that "to *avoid* an illuminance of *0.1 foot candles (fc)* incident on another vehicle…high beam headlamps should be *dimmed within 700 feet*." EX1007, 1:14-32, Abstract, 9:12-10:8, FIG. 11; EX1003, ¶334. Thus, Stam defines a "predefined" (dimmed) threshold value, corresponding to the "predefined threshold." EX1003, ¶¶334-337.

Thus, the combined Beam-Thominet-Stam system would illuminate Beam's first subsection "below a predefined threshold." *Supra* Section VI.A; EX1003, ¶¶338-349.

**10. [37.9]**

Beam discloses [37.9]. *Supra* Sections VI/VI.A; EX1003, ¶¶268-280, 350-352; EX1005, 6:11-44, FIGS. 1, 1C-1D, 7, 2:59-3:3, 6:53-56.

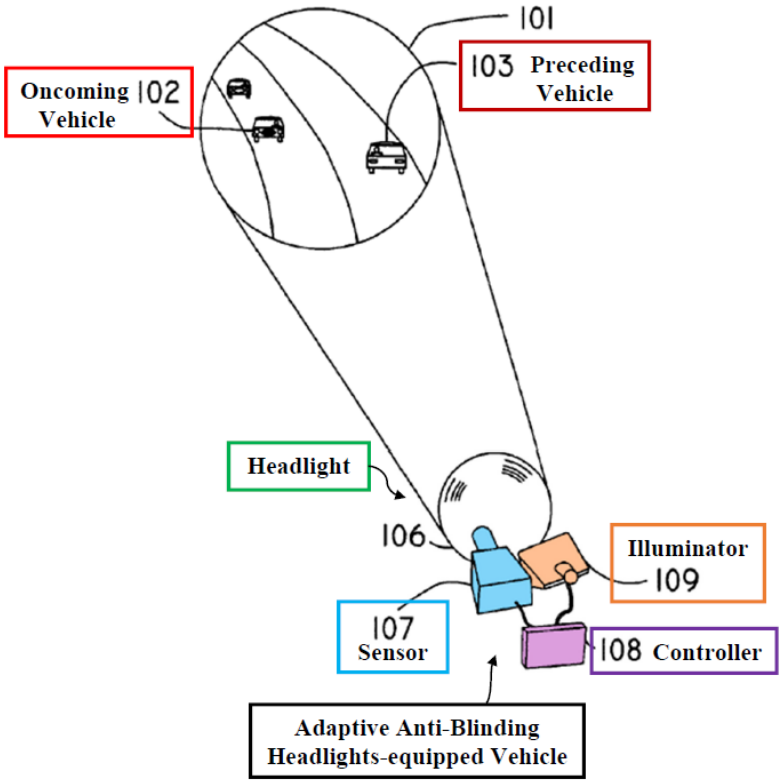


EX1005, FIG. 1 (annotated).

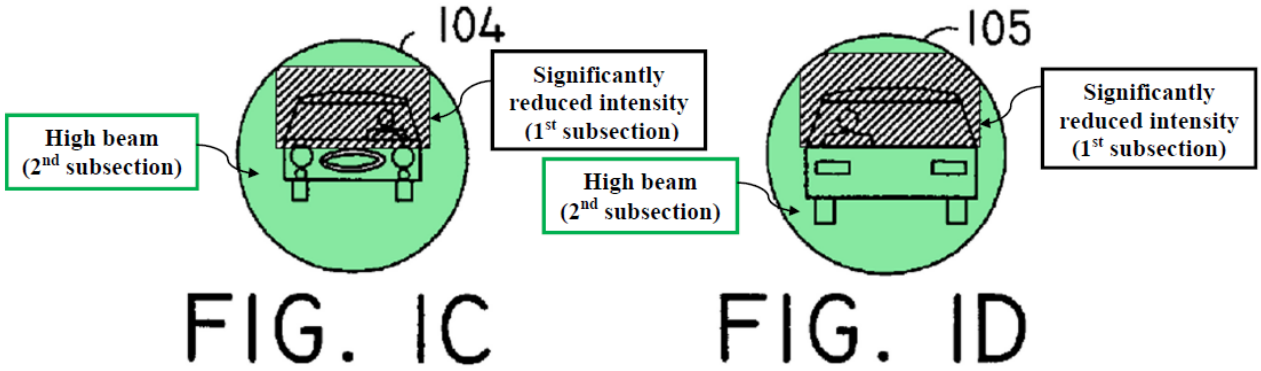


EX1005, FIGS. 1C-1D (annotated).

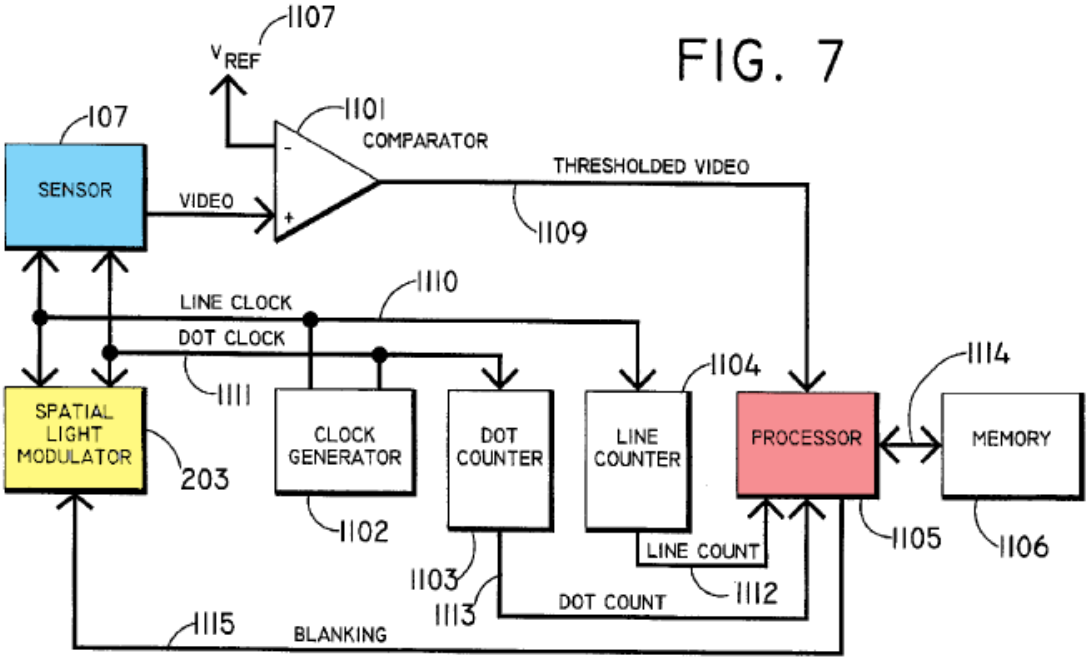


EX1005, FIG. 7 (annotated).

If Patent Owner argues, incorrectly, Beam-Thominet does not disclose [37.9], Stam does. EX1003, ¶353.

Again, Stam discloses a predefined dimmed illuminance value. EX1007, Abstract, 1:14-31, 9:12-10:8, FIG. 11; EX1003, ¶¶354-357.

Thus, the combined Beam-Thominet-Stam system would illuminate the second subsection "above the predefined threshold." *Supra* Sections VI.A/VI.B.8; EX1003, ¶¶358-369.

**11. [37.10]**

[37.10] is patentably indistinct from [1.10]. *Supra* Section V.B.11; EX1003, ¶¶370-372.

### C. Claim 38

Beam's "*[p]rocessor 1105* uses…incoming data to *determine the locations to be blanked*." EX1005, 5:34-36, 5:46-54, FIGS. 1, 1C-1D, 7, Abstract, 6:14-16, 5:65-6:4; EX1003, ¶373. Beam "*determin[es]*, from the *detected presence* of the oncoming or followed vehicle…*the shape, size and location…to be darkened*." EX1005, 8:29-38, FIGS. 1, 1C-1D, 7, 1:5-18, 2:59-3:3, 4:10-25, 5:13-15, 5:33-54; EX1003, ¶374.

Thus, Beam's processor processes the data, and determines an area to be dimmed within a first subsection of the field-of-view (e.g., that includes a portion of the second vehicle that a driver is in) and an area to be illuminated within a second subsection of the field-of-view (e.g., area of high intensity, including non-vehicle portions of the field-of-view). EX1005, 5:33-54, 6:12-27, FIGS. 1C-1D; EX1003, ¶¶375-377.

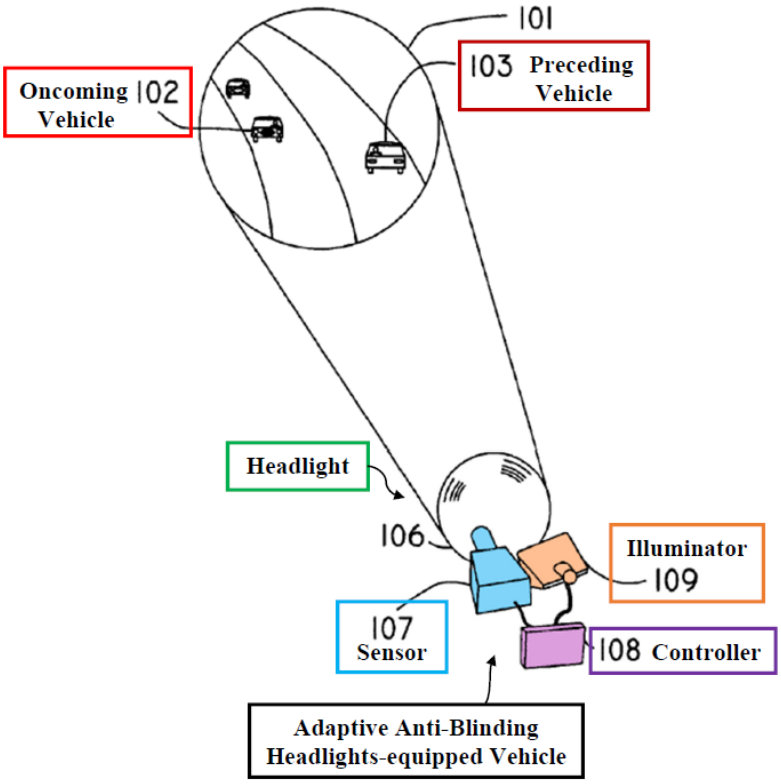


EX1005, FIG. 1 (annotated).

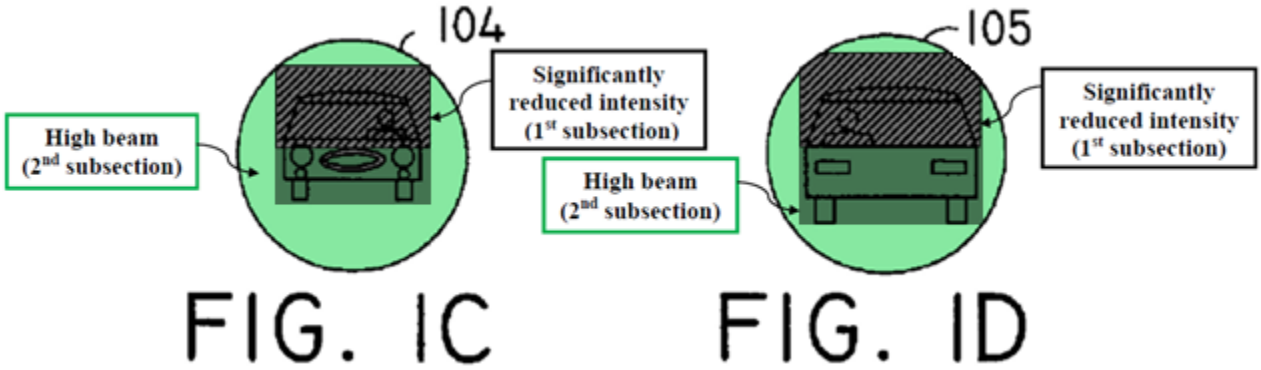


EX1005, FIGS. 1C-1D (annotated).

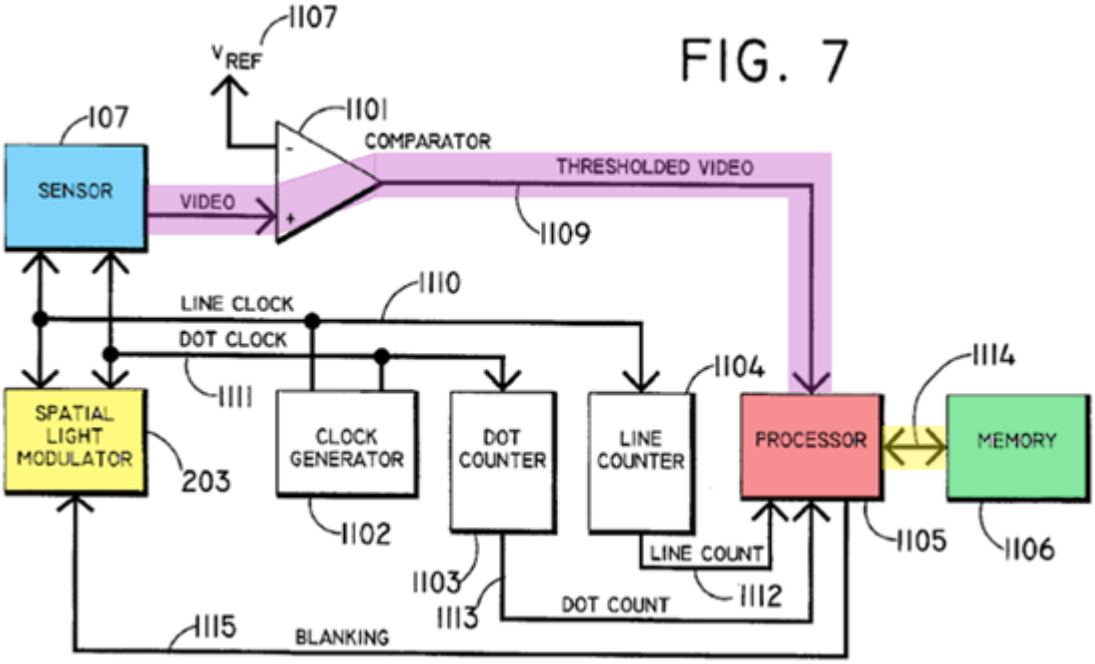


EX1005, FIG. 7 (annotated).

### D. Claim 39

*See supra* Sections V.B.4/VI.B.4; EX1003, ¶¶171-174, 378. Beam's illumination in its first subsection is "*significantly less* than with current *low beams*." EX1005, 1:5-18, FIGS. 1, 1C-1D, 7, 2:59-3:3, 4:20-25, 5:46-54, 5:65-6:4; EX1003, ¶379. Beam's illumination in its second subsection is "at *maximum* intensity" and "like having bright *high beams* on at all times." EX1005, 6:30-33, 6:11-12, 6:40-44, FIGS. 1, 1C-1D, 7, 2:59-3:3, 6:51-55; EX1003, ¶380; *see also* EX1001, 16:43-50, 2:28-30. Thus, Beam's processor controls "different illumination characteristics for each of the at least two sub-sections." EX1005, 5:33-54, 6:12-27, FIGS. 1C-1D; EX1003, ¶¶381-382.

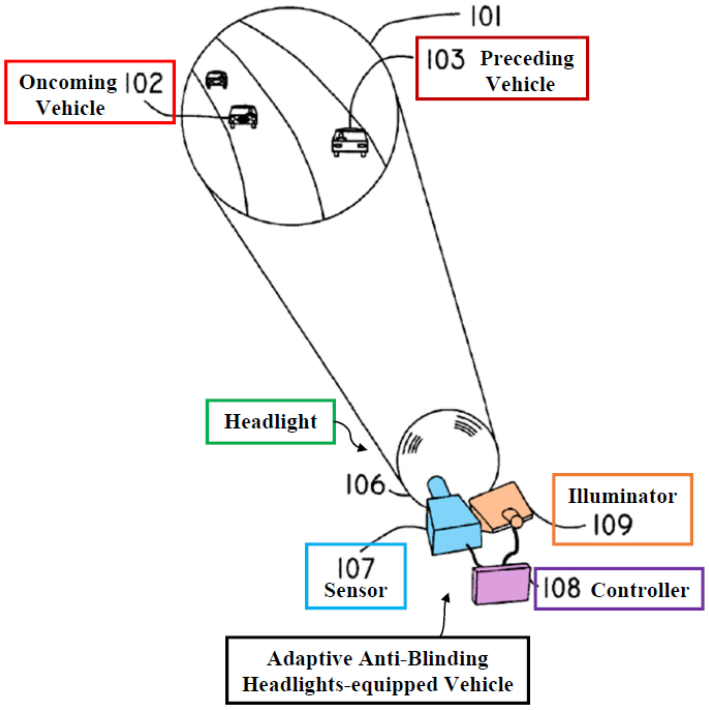


EX1005, FIG. 1 (annotated).

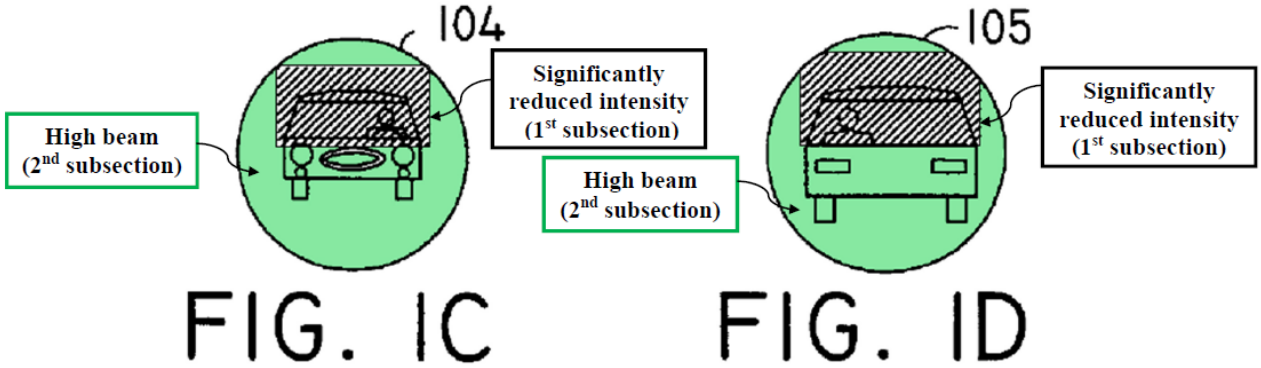


EX1005, FIGS. 1C-1D (annotated).

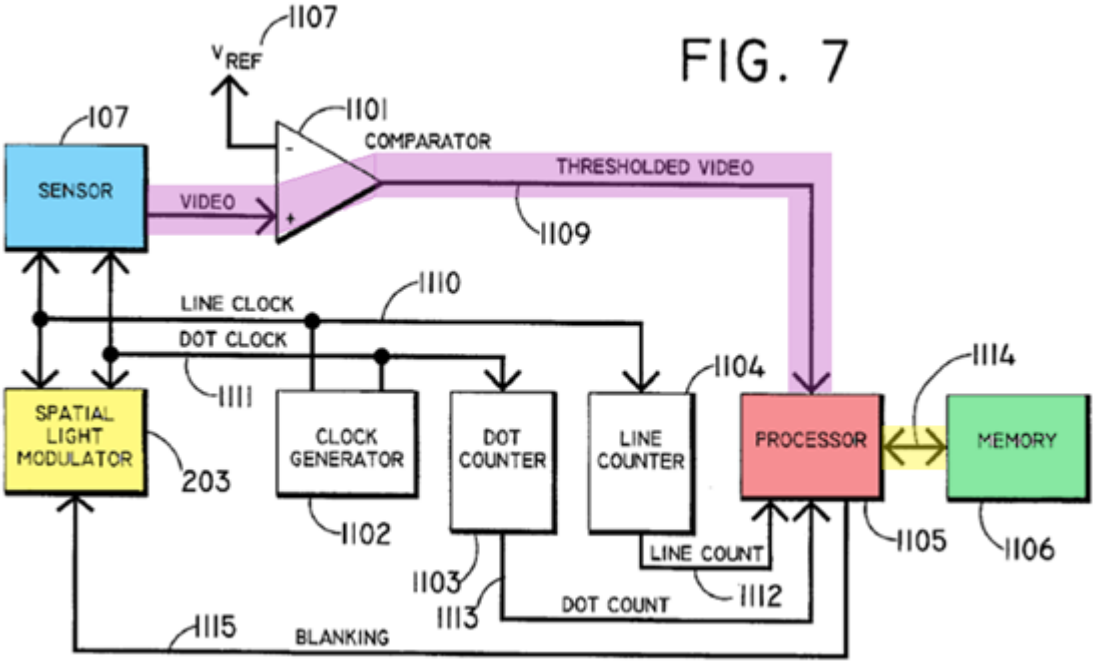


EX1005, FIG. 7 (annotated).

### E. Claim 40

*See supra* Sections V.B.9/VI.B.8; EX1003, ¶¶191-195, 326-328, 383. Beam's illumination in its first subsection is "*significantly less* than with current *low beams*." EX1005, 1:5-18, FIGS. 1, 1C-1D, 7, 2:59-3:3, 4:20-25, 5:46-6:4; EX1003, ¶384. Beam's illumination in its second subsection is "at *maximum* intensity." EX1005, 6:11-56, FIGS. 1, 1C-1D, 7, 2:59-3:3; EX1003, ¶384.

Thus, Beam's light distribution pattern defines illumination for first and second subsections of the field-of-view. EX1005, 5:33-54, 6:12-27, FIGS. 1C-1D; EX1003, ¶¶385-386.

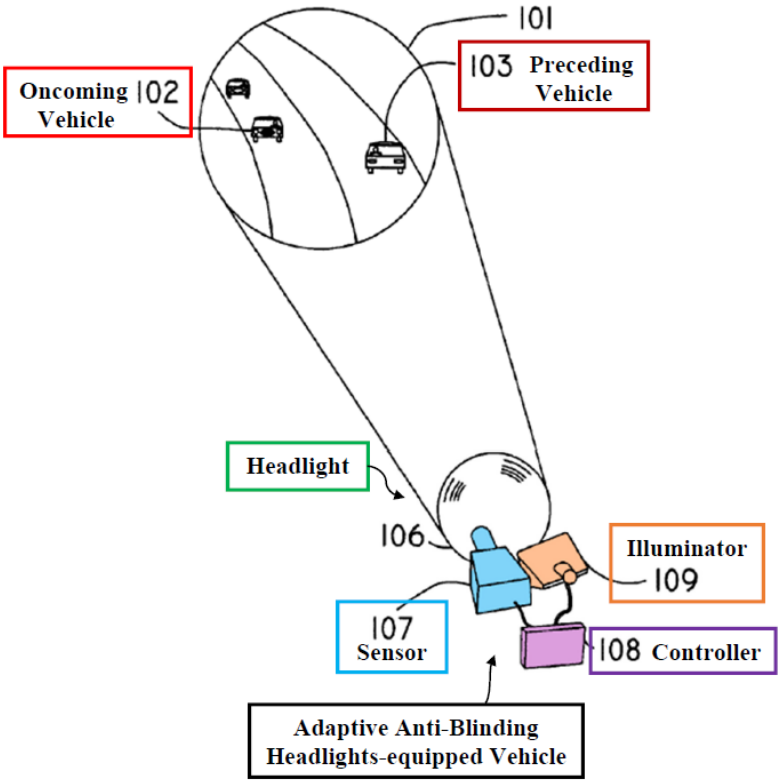


EX1005, FIG. 1 (annotated).

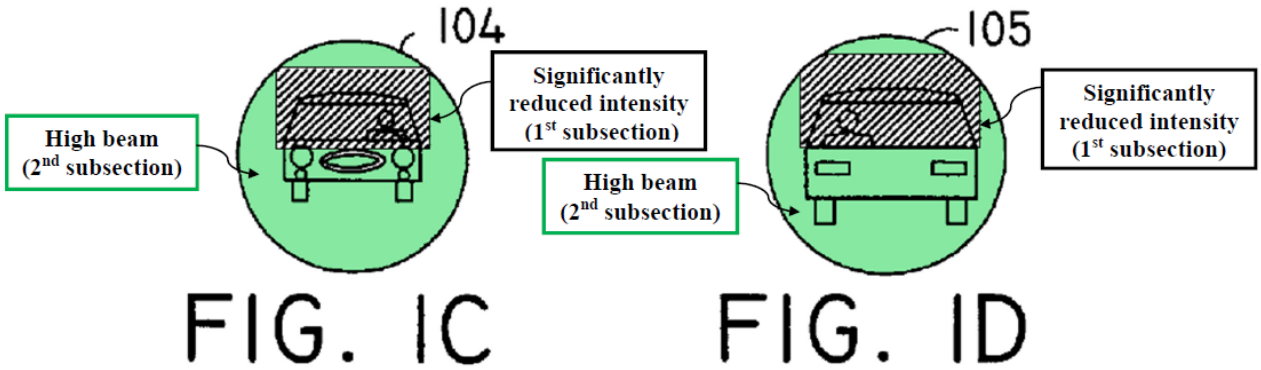


EX1005, FIGS. 1C-1D (annotated).

### F. Claim 41

*See supra* Sections V.B.9/VI.B.8; EX1003, ¶387. Beam's first subsection is illuminated "below a predefined threshold" (*low beam* threshold) and the second subsection is illuminated "above the predefined threshold." *Supra* Sections

VI.A/VI.B.9/VI.B.10; EX1003, ¶388. Specifically, Beam's first subsection is illuminated "*significantly less* than with current *low beams*." EX1005, 1:5-18, FIGS. 1, 1C-1D, 7, 2:59-3:3, 4:20-25, 5:46-54, 5:65-6:4; EX1003, ¶389. Beam's illumination in its second subsection is "at *maximum* intensity." EX1005, 6:11-56, FIGS. 1, 1C-1D, 7, 2:59-3:3; EX1003, ¶389.

Thus, Beam's light distribution pattern illuminates a first subsection "below the predefined threshold" and illuminates a second subsection "above the predefined threshold." EX1005, 5:33-54, 6:12-27, FIGS. 1C-1D; EX1003, ¶¶390-391.

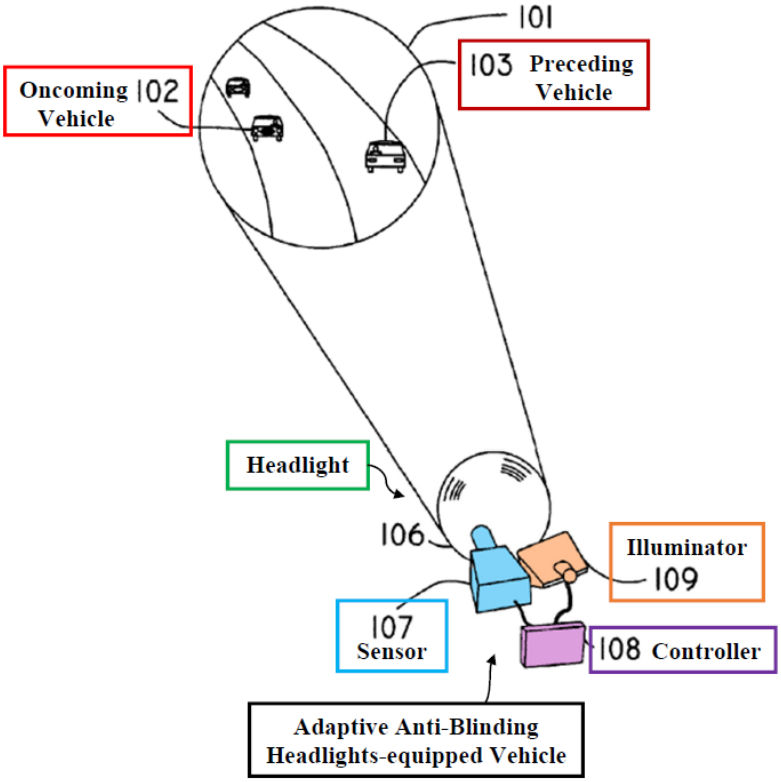


EX1005, FIG. 1 (annotated).

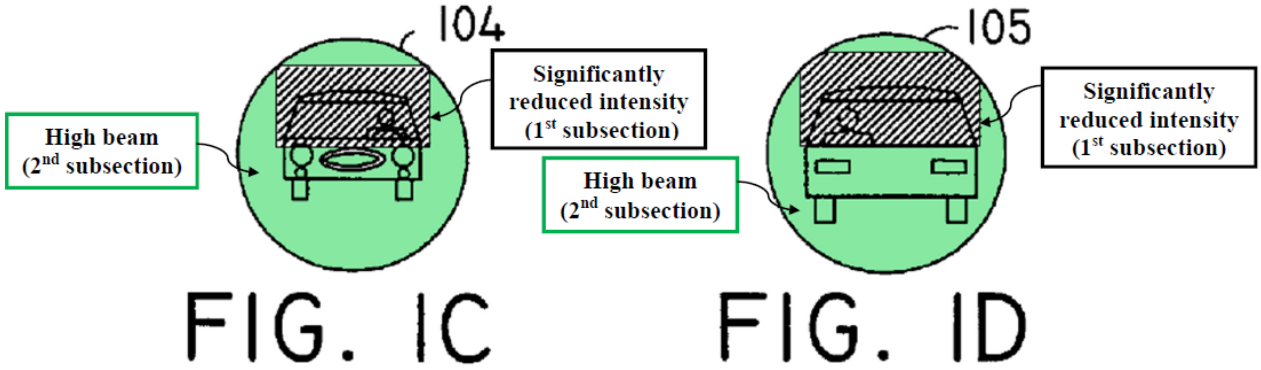


EX1005, FIGS. 1C-1D (annotated).

**G. Claim 42**

Claim 42 is patentably indistinct from claim 2. Claim 42 is therefore disclosed as discussed above. *Supra* Section V.C; *see also* Appendix C; EX1003, ¶¶392-393.

**H. Claim 43**

Claim 43 is patentably indistinct from claim 3. Claim 43 is therefore disclosed as discussed above. *Supra* Section V.D; EX1003, ¶¶394-395.

**I. Claim 44**

Claim 44 is identical to claim 4. *Supra* Section V.E; EX1003, ¶¶396-397.

**J. Claim 45**

Claim 45 is patentably indistinct from claim 5. Claim 45 is therefore rendered obvious as discussed above. *Supra* Section V.F; EX1003, ¶¶398-399.

**K. Claim 47**

Claim 47 is patentably indistinct from claim 7. Claim 47 is therefore disclosed as discussed above. *Supra* Section V.G; EX1003, ¶¶400-401.

**L. Claim 48**

Claim 48 is patentably indistinct from claim 8. Claim 48 is therefore disclosed as discussed above. *Supra* Section V.G; EX1003, ¶¶402-403.

**M. Claim 50**

Claim 50 is patentably indistinct from claim 11. Claim 50 is therefore disclosed as discussed above. *Supra* Section V.J; EX1003, ¶¶404-405.

**N. Claim 51**

Beam provides illumination in "the area…that would *dazzle* the driver will be *darkened*, while maintaining *f[u]ll intensity elsewhere*." EX1005, 2:59-3:24, FIGS. 1, 1C-1D, 7, 5:34-6:19, Abstract, 8:23-38, 1:5-18, 4:10-25; EX1003, ¶¶406-407. Thus, Beam's light distribution pattern dims a first subsection to "mitigat[e] glare" and illuminates a second subsection to provide "preserved illumination." EX1005, 5:33-6:27, FIGS. 1C-1D; EX1003, ¶¶408-409.

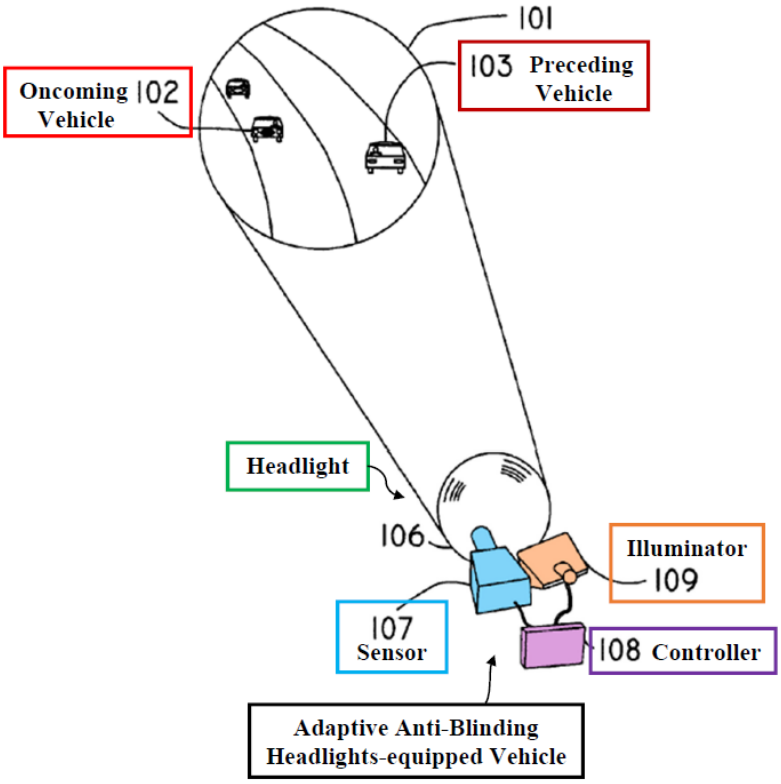


EX1005, FIG. 1 (annotated).

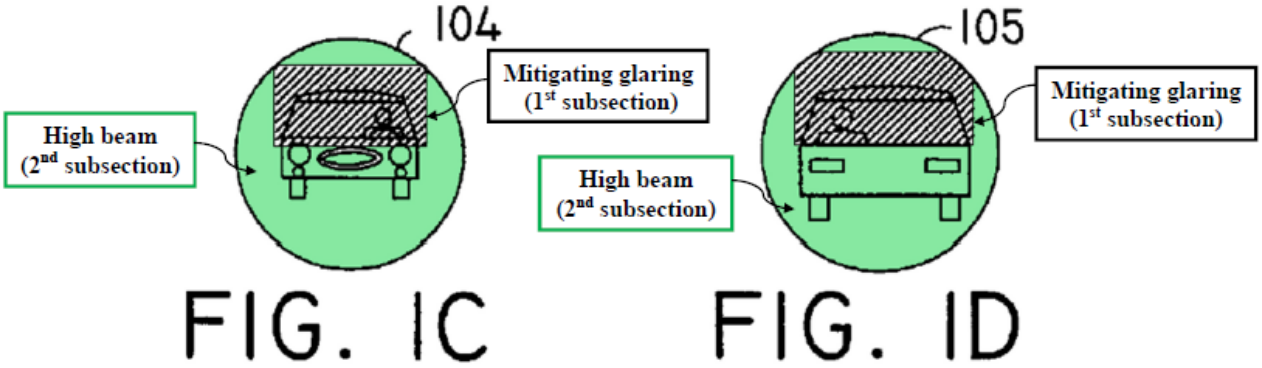


EX1005, FIGS. 1C-1D (annotated).

### O. Claim 52

Beam's second subsection illumination is "a *much higher brightness beam*." EX1005, 3:20-24, 6:40-44 ("*bright high beams*"), 2:59-3:3, FIGS. 1, 1C-1D, 7, 6:11-12, 1:5-18; EX1003, ¶410. This "provide[s] high-beam illumination" in the

second subsection "without diminishing a range of the high-beam illumination."

EX1005, 2:59-3:3; *supra* Section V.K; EX1003, ¶¶410-411.

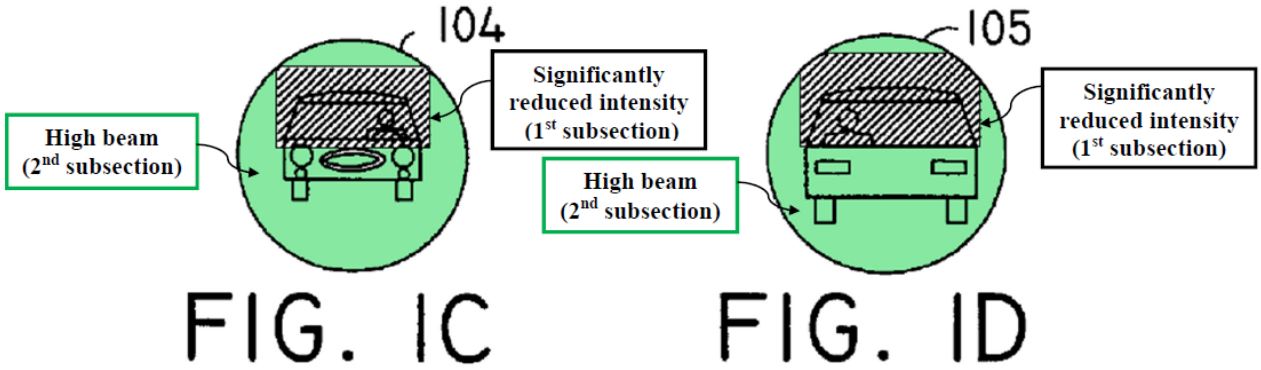


EX1005, FIGS. 1C-1D (annotated).

### P. Claim 53

Claim 53 is identical to claim 14. *Supra* Section V.M; EX1003, ¶¶412-413.

### Q. Claim 57

Claim 57 is identical to claim 18. *Supra* Section V.N; EX1003, ¶¶414-415.

### R. Claim 58

Claim 58 is patentably indistinct from claim 19. Claim 58 is therefore disclosed as discussed above. *Supra* Section V.C; EX1003, ¶¶416-418.

## VII. GROUND 3: THE COMBINATION OF BEAM, THOMINET, AND KOBAYASHI RENDERS OBVIOUS CLAIMS 9 AND 15-17.

### A. A POSA would have been motivated to combine Kobayashi with Beam-Thominet with a reasonable expectation of success.

A POSA would have been further motivated to modify Beam-Thominet to adjust light based on sensed data, such as map data from a GPS sensor (including road curvature/planned upcoming turns), as in Kobayashi, to further control Beam's

system to illuminate curves/turns. EX1003, ¶¶75-89, 95-100, 419-422; EX1005, 3:8-14, 3:37-45, 5:33-54, 7:1-13; EX1006, ¶¶8, 25, FIGS. 1B-2.

*First*, including an additional data source for Beam-Thominet's controller—Kobayashi's *known technique* of using GPS data—would have enhanced Beam-Thominet by increasing/adjusting illumination based on an upcoming curve/turn, improving safety by providing light to where it is needed. *Second*, a POSA would have easily incorporated *known components* of Kobayashi's road profile calculating means 2 and/or vehicle advancing direction prediction means 3 (including GPS navigation device 29, *see* EX1008, Abstract, 1:10-2:38, 4:60-64, FIGS. 1, 10, 12) into Beam-Thominet. EX1003, ¶423. This would have provided road curvature data for Beam's detected scene, allowing Beam-Thominet to increase illumination toward the upcoming curve/turn. *Id.*, ¶423; EX1005, 5:33-54, 3:8-45, 6:53-7:13; EX1008, 15:6-28.

Beam acknowledges benefits of prior systems that control headlamps in response to changes in the vehicle's position (tilt on a hill) and steering mechanism (along a curve). EX1005, 1:61-2:6, 2:15-22; EX1003, ¶424.

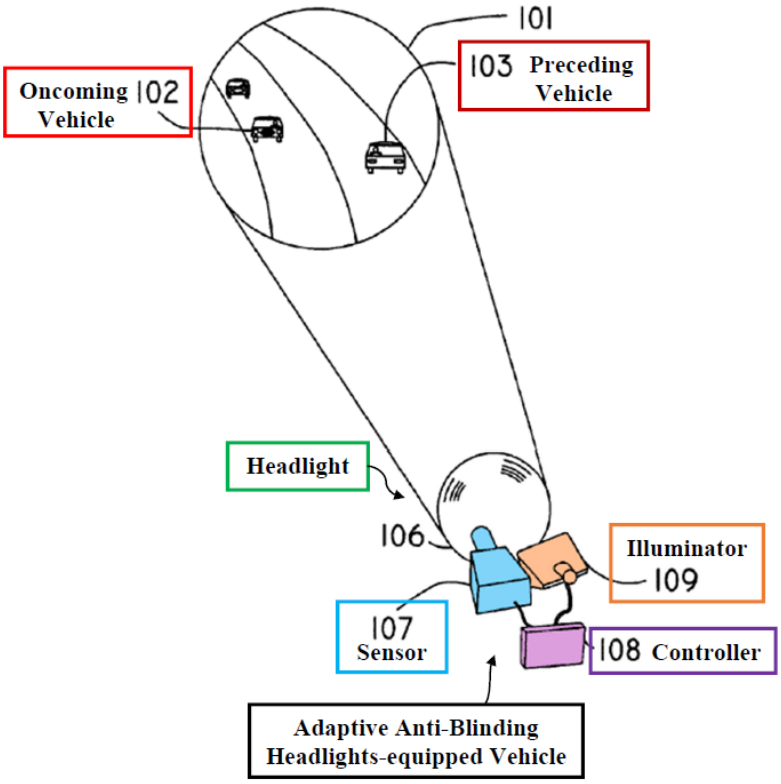


EX1005, FIG. 1 (annotated).

Thominet also expresses importance of illuminating "to the right or to the left…during *d[r]iving over a curve* or…a *bending*" with directional light sources to provide illumination in the "traveling direction." EX1006, ¶¶8, 25, FIGS. 1B-2; EX1003, ¶425.

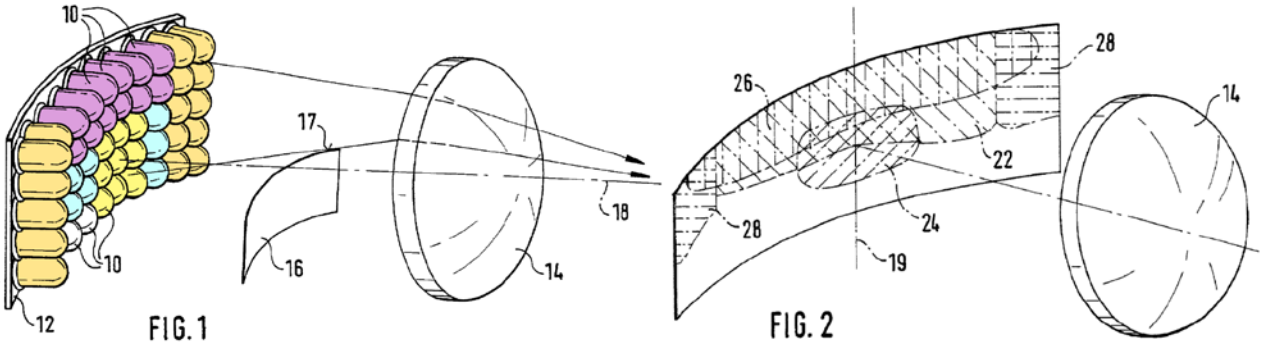


EX1006, FIGS. 1-2 (annotated).

Providing details on how to detect upcoming curves/turns would have made Beam-Thominet more active, as Beam seeks to do (EX1005, 2:15-22), and further achieves Beam's purpose of improving safety. EX1003, ¶426; EX1005, 3:8-45, 6:53-7:13. Kobayashi's active *techniques and system components*, like Beam-Thominet, seek to enhance safety—using GPS sensor data-based control including road curvature. EX1008, 15:6-28; EX1003, ¶427. Kobayashi's GPS data are inputs to control means 4, which alters the light direction from its headlamp in response to road curvature data. EX1008, 3:9-50, 6:4-62, FIG. 1, 15:6-28; EX1003, ¶427. Kobayashi responds to real-world conditions, multiple curves, and intersections. EX1008, 11:34-14:52, 17:41-50; EX1003, ¶427.

Kobayashi's Figure 10 shows illumination control is planned and controlled for multiple curves. EX1003, ¶428. When vehicle K turns left (point A), the light illuminates the left shoulder. Likewise, when vehicle K turns right on a subsequent curve (point C), the light illuminates the right shoulder. EX1008, 14:53-15:28, 17:3-18:67, FIG. 12; EX1003, ¶428.

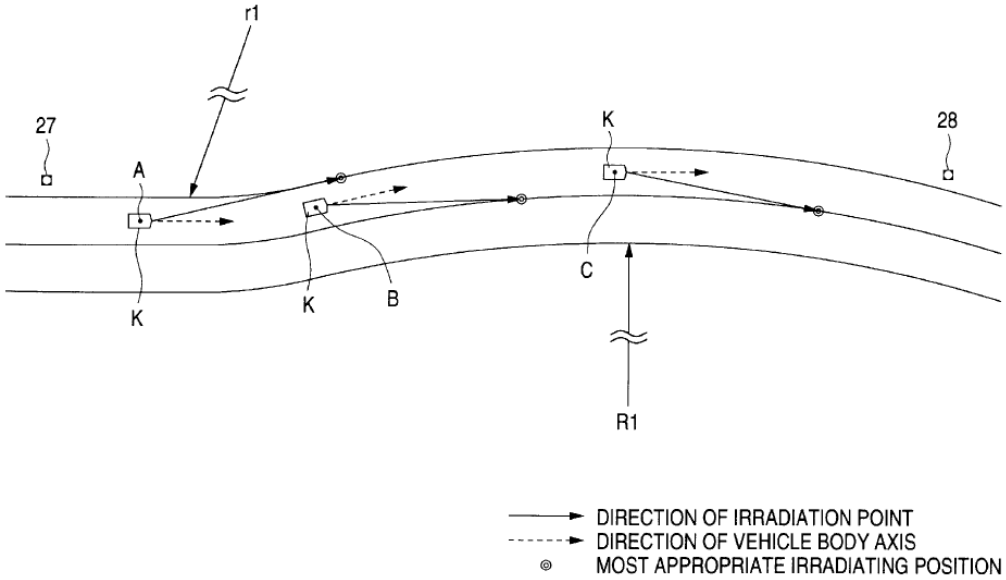


EX1008, FIG. 10.

Including an additional data source for Beam-Thominet's controller/processor—Kobayashi's GPS data—would have enhanced Beam-Thominet by increasing illumination of upcoming curves/turns. EX1003, ¶429. This would have been applying Kobayashi's known technique (using map data including road curvature from GPS to shape/reshape light) to Beam-Thominet's similar, known device (dynamic headlamp system with controllable beams), in the same way. *Id.*, ¶429; *KSR* at 417. Kobayashi's known technique is fully described along with its benefits; thus, a POSA would have readily applied it to similar systems, such as Beam-Thominet's, in the same way. EX1003, ¶429; *KSR* at 419-421.

This modification would have been combining known prior-art elements (Beam-Thominet's adaptive, direction-controllable headlamps with Kobayashi's

directional control based on GPS data) according to known methods to yield predictable results (illuminating curves/turns). EX1003, ¶430; *KSR* at 415-416.

A POSA would have had a reasonable expectation of success combining Kobayashi with Beam-Thominet, for example, by modifying software instructions stored in memory of Beam-Thominet's controller/processor (ECU) to adjust and direct light appropriately in view of Kobayashi's GPS data. EX1003, ¶431. It also would have been a straightforward combination of prior-art elements: Kobayashi's road profile calculating means 2 and/or vehicle advancing direction prediction means 3 (including GPS navigation device 29) with Beam-Thominet (in communication with Beam's controller). *Id.*, ¶431.

This would have been routine and well within a POSA's skill due to the similarities in Beam-Thominet's and Kobayashi's adaptive light control systems and methods—their common components were well-known and there would have been no limitations for a POSA to make such modifications. *Id.*, ¶¶432-433.

**B. Claim 9**

Beam uses sensor 107 as a control input to processor 1105, controlling illumination. EX1003, ¶¶434-435.

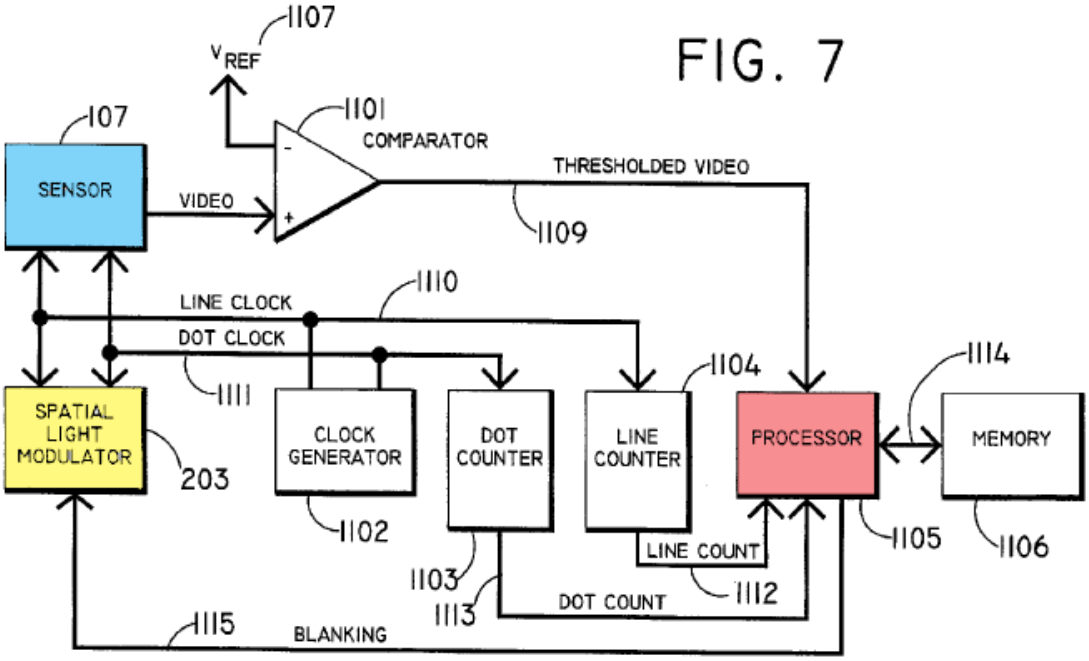


EX1005, FIG. 7 (annotated).

Kobayashi's "*GPS navigation device 29*…includes…*GPS receiving section 32*." Kobayashi's "GPS navigation device 29 sends information about the road profile…to ECU 10." EX1008, 17:3-47, 9:38-41, FIGS. 1, 9, 10, 12, 3:9-50, 14:53-15:28; EX1003, ¶436.

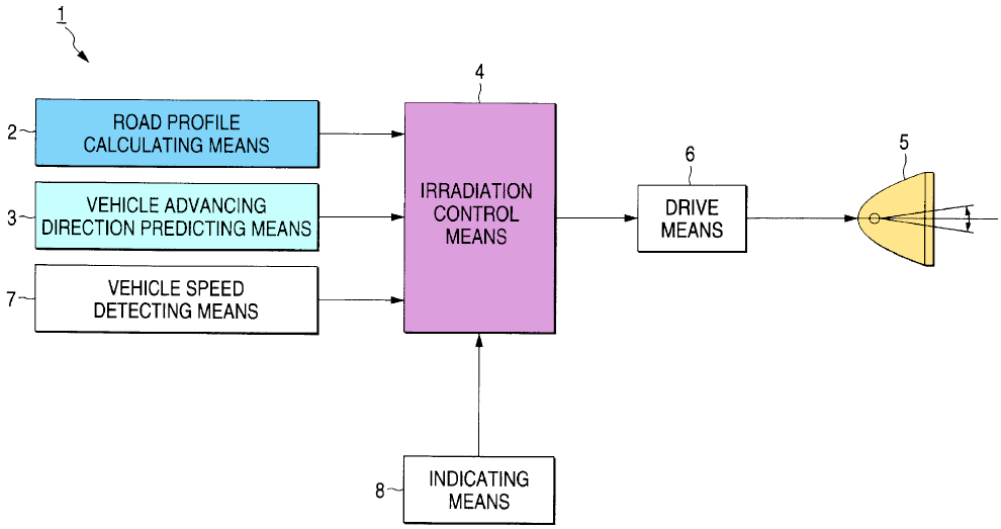

EX1008, FIG. 1 (annotated).

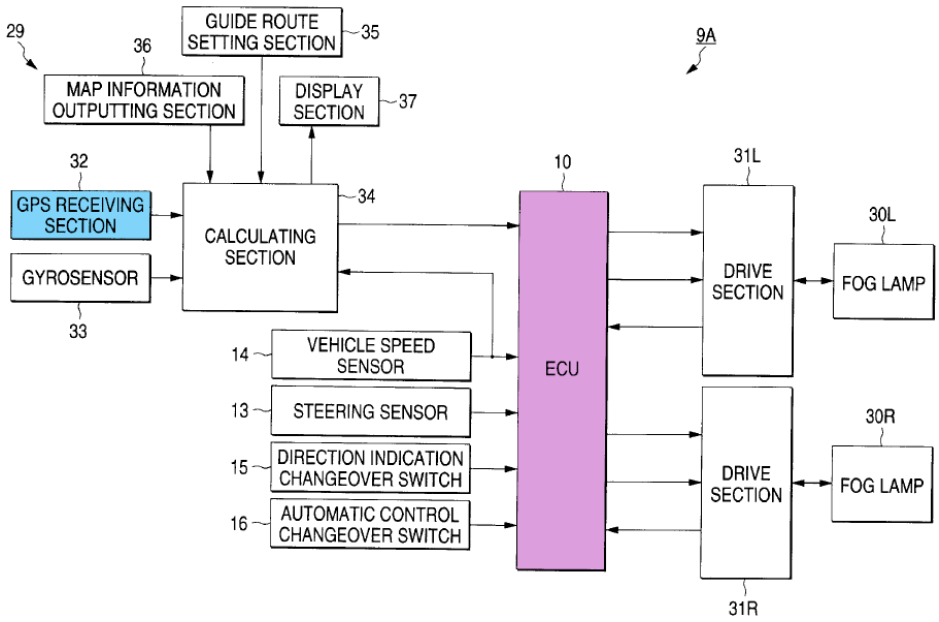


EX1008, FIG. 12 (annotated).

*Supra* Section VII.A; EX1003, ¶¶419-432, 437-452.

Thus, Beam-Thominet-Kobayashi renders obvious claim 9. EX1003, ¶452.

### C. Claim 15

Beam's data "*control[s] the Illuminator*" and its "*[p]rocessor…commands* the appropriate pixels." EX1005, 6:14-27, 5:33-54, FIGS. 1, 7, 4:53-59, 2:32-38, Abstract; EX1003, ¶¶453-454.

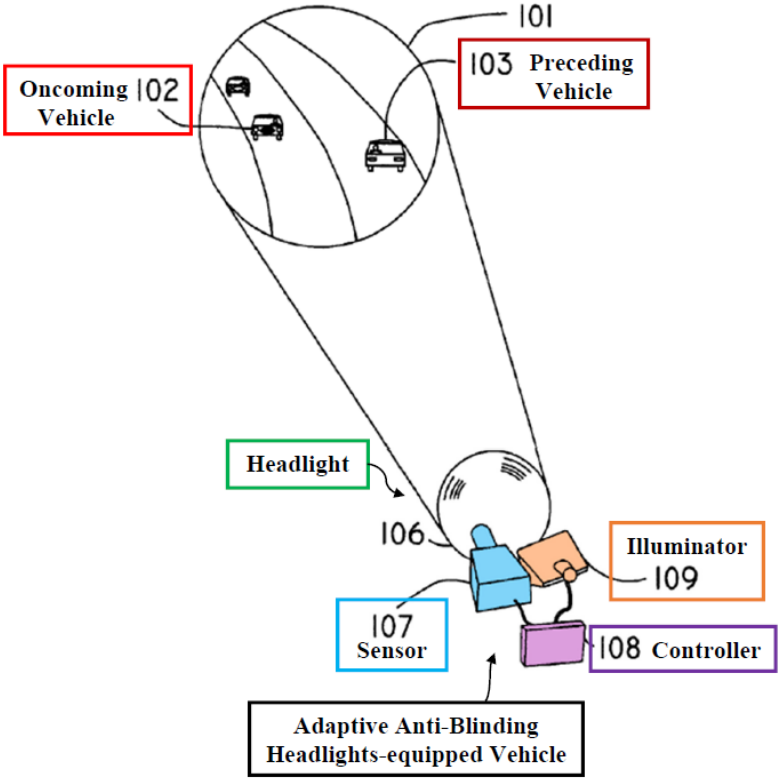


EX1005, FIG. 1 (annotated).

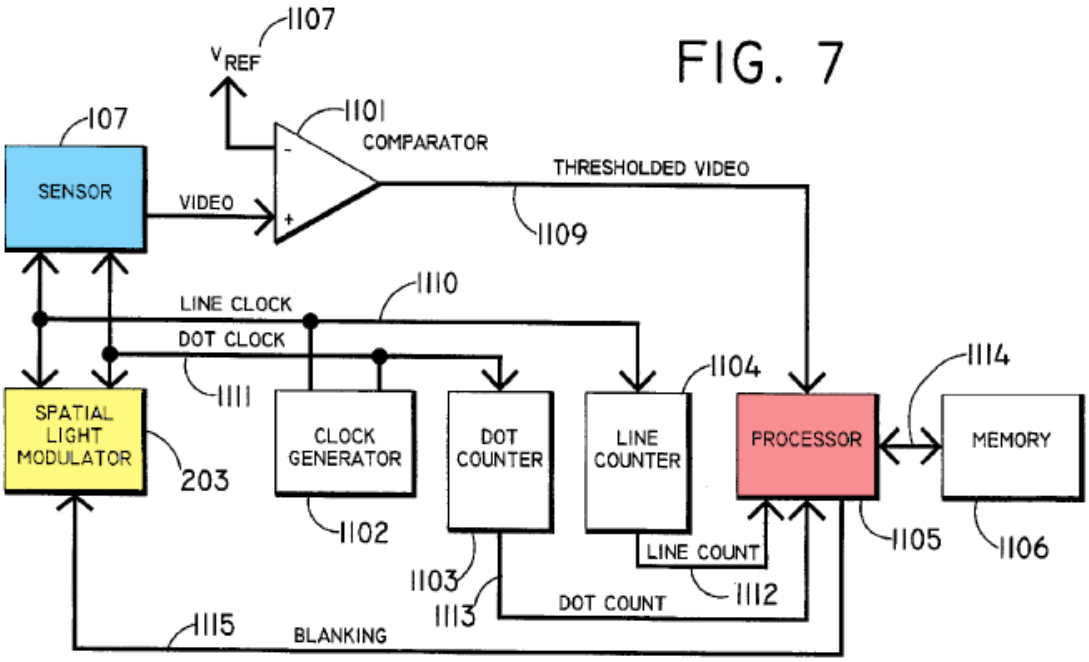


EX1005, FIG. 7 (annotated).

Kobayashi's illumination is controlled "[a]ccording to the *road profile information*" and "applied…[so] a portion of irradiating light is directed to a *specific direction*." EX1008, 14:53-15:28, 9:38-41, FIGS. 1, 10, 4:60-64, 3:9-50; EX1003, ¶¶455-456.

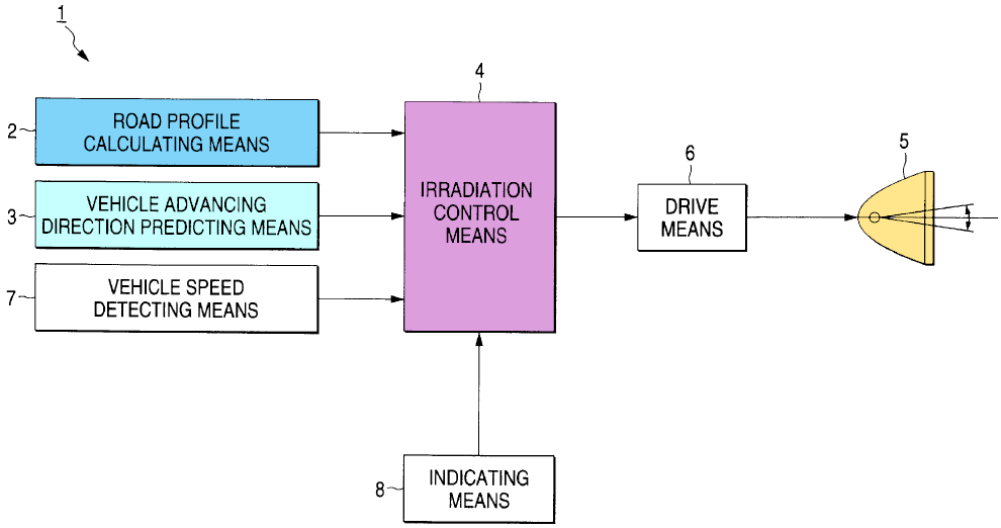


EX1008, FIG. 1 (annotated).

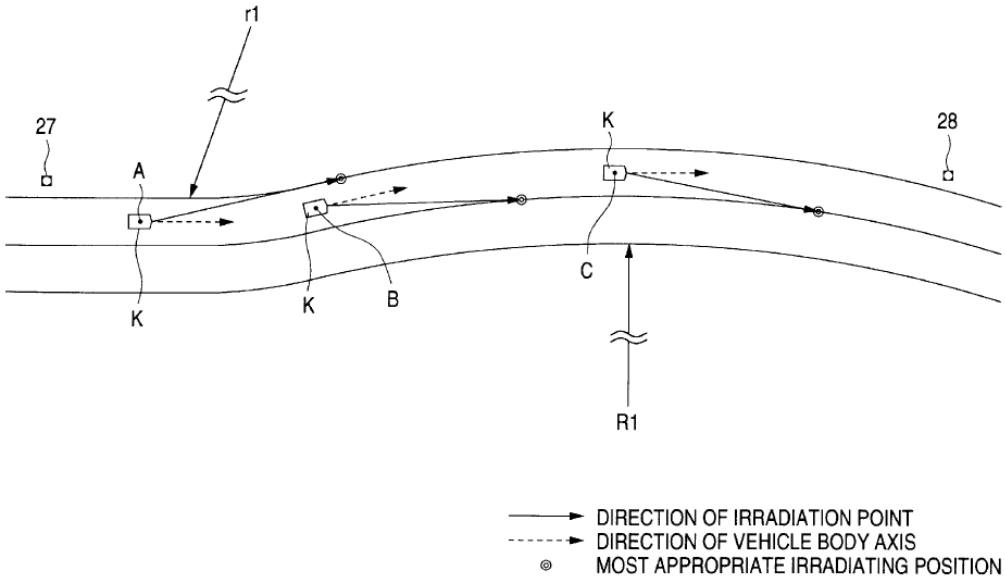


EX1008, FIG. 10.

*Supra* Section VII.A; EX1003, ¶¶419-432, 457-472.

Thus, Beam-Thominet-Kobayashi renders obvious claim 15. EX1003, ¶472.

**D. Claims 16/17[8]**

Beam's data "*control[s] the Illuminator*" and its "*[p]rocessor…commands* the appropriate pixels." EX1005, 6:14-27, 5:33-54, FIGS. 1, 7, 4:53-59, 2:32-38, Abstract; EX1003, ¶¶473-475.

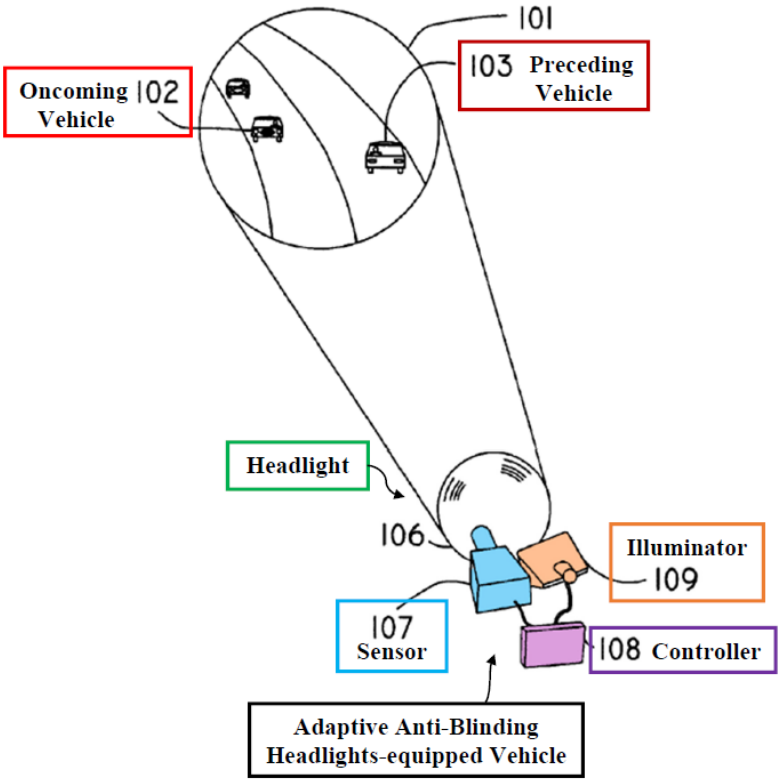


EX1005, FIG. 1 (annotated).

[8] Claims 16-17 are identical. EX1003, ¶473.

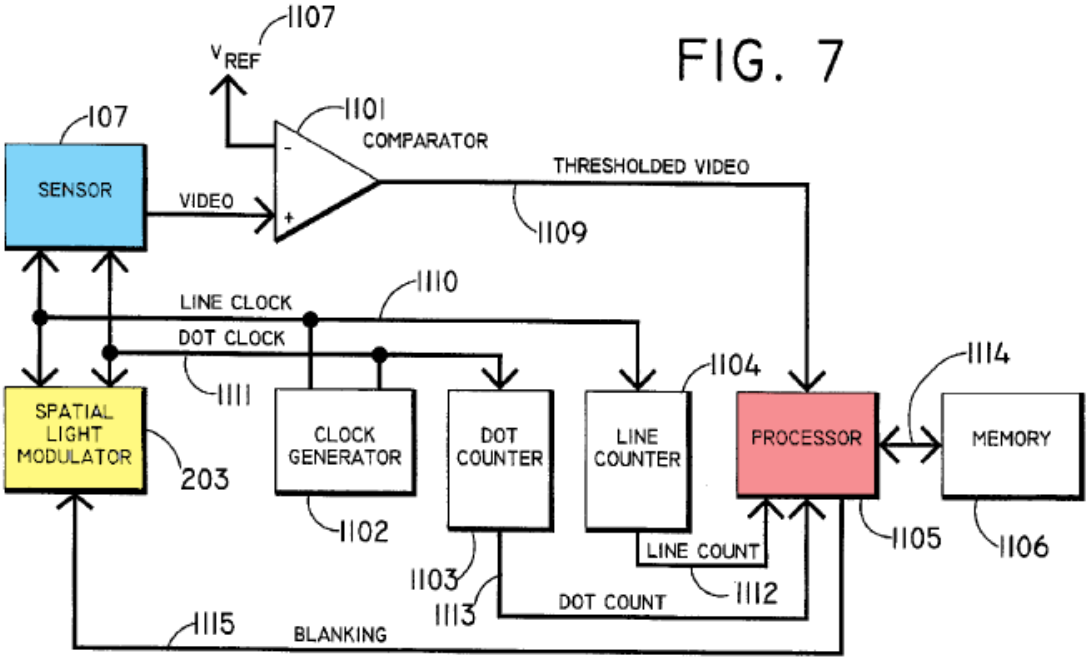


EX1005, FIG. 7 (annotated).

Kobayashi's illumination is "applied…to a *specific direction*" and "conducted…*along the scheduled course*." EX1008, 9:38-41, 18:53-57, FIGS. 1, 9, 10, 4:6-8, 3:9-50, 11:34-14:52; EX1003, ¶476. Thus, Kobayashi discloses a "planned upcoming turn" because the "scheduled course" includes an intended direction of a driver (e.g., turn). EX1003, ¶477; EX1001, 54:1-18.

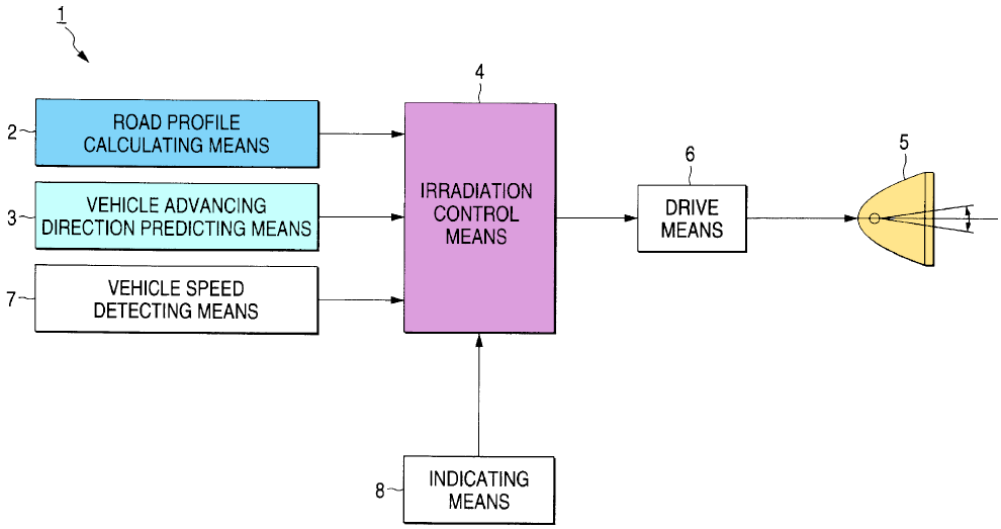


EX1008, FIG. 1 (annotated).

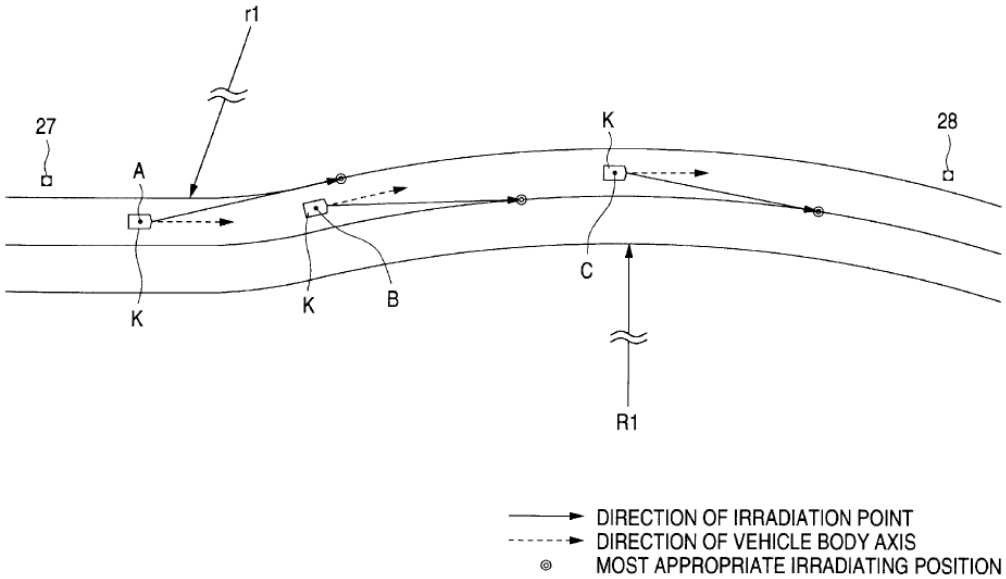


EX1008, FIG. 10.

*Supra* Section VII.A; EX1003, ¶¶419-432, 478-494.

Thus, Beam-Thominet-Kobayashi renders obvious claims 16-17. EX1003, ¶494.

## VIII. GROUND 4: THE COMBINATION OF BEAM, THOMINET, STAM, AND KOBAYASHI RENDERS OBVIOUS CLAIMS 49 AND 54-56.

### A. A POSA would have been motivated to combine Kobayashi with Beam-Thominet-Stam with a reasonable expectation of success.

A POSA would have been further motivated to combine Kobayashi with Beam-Thominet-Stam. *Supra* Section VII.A; EX1003, ¶¶419-432, 495.

### B. Claim 49

Claim 49 is patentably indistinct from claim 9. Claim 49 is therefore disclosed as discussed above. *Supra* Section VII.B; EX1003, ¶¶496-497.

### C. Claim 54

Claim 54 is patentably indistinct from claim 15. Claim 54 is therefore disclosed as discussed above. *Supra* Section VII.C; EX1003, ¶¶498-500.

### D. Claims 55/56[9]

Claims 55-56 are patentably indistinct from claims 16-17. Claims 55-56 are therefore disclosed as discussed above. *Supra* Section VII.D; EX1003, ¶¶501-505.

## IX. GROUND 5: THE COMBINATION OF BEAM, THOMINET, AND BRAUN RENDERS OBVIOUS CLAIM 6.

### A. A POSA would have been motivated to combine Braun with Beam-Thominet with a reasonable expectation of success.

A POSA would have been further motivated to modify Beam-Thominet to include infrared (IR)/ultraviolet (UV) wavelengths, as in Braun (EX1009, 3:4-27, 8:4-5, 9:23-28, 14:21-30, 18:13-14, 19:9-21, 20:25-21:16, FIGS. 3-6), to further

[9] Claims 55-56 are identical. EX1003, ¶501.

control Beam-Thominet's adaptive headlamps to illuminate a roadway, thereby improving visibility. EX1003, ¶¶75-89, 101-102, 114, 506-507; EX1005, 3:29-45, 3:8-14, 5:33-54, 7:1-13; EX1006, ¶¶5, 7, 17-18, 21-26.

A POSA would have sought to incorporate *known components* (hardware implementation) of Braun's colored luxels 26 (with IR/UV wavelengths, *see* EX1009, 3:4-8, 3:26-27, 8:4-5, 9:23-28, 14:21-30, 18:13-14, 19:9-21, 20:25-21:16, FIGS. 3-6) into Beam-Thominet. EX1003, ¶508. This would have provided different colored spatial distributions for different situations. *Id.*, ¶508. Additionally this would have provided improved illumination of fluorescent surfaces (UV luminescence) and/or provided distance ranging to objects (IR sensing). *Id.*, ¶¶509-510.

Beam's LED array modified by Thominet recognizes that "light beams of *different light colors* is possible…for different signal functions" and "different partial regions [22, 24, 26, 28] emit light of *different colors*." EX1006, ¶¶5, 7, 27, FIGS. 1B-2; EX1003, ¶¶511-512; *see also* EX1005, 3:29-36, 1:54-59, 4:48-59.

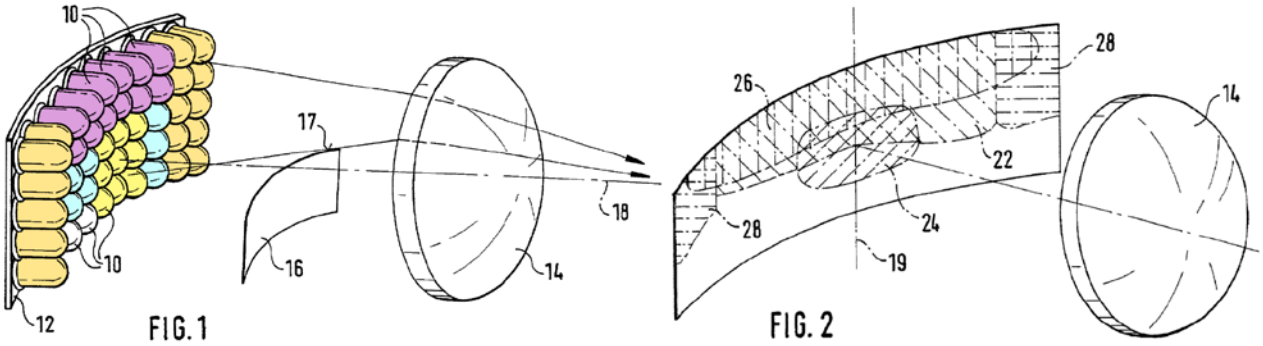


EX1006, FIGS. 1-2 (annotated).

And through its *system components*, Braun seeks to enhance visibility. EX1009, 3:4-27, 8:4-5, 9:23-28, 14:21-30, 18:13-14, 19:9-21, 20:25-21:16, FIGS. 3-6; EX1003, ¶513. Braun's colored luxels 26 provide "adaptive illumination of a *roadway* and *neighboring regions*" (road-signs 121, 122) and "luxels 26…comprise *infrared* or *ultraviolet* light." EX1009, 14:21-30, 5:22-25, FIGS. 2-3, 5-6, 21:1-12, 18:13-14, 23:28-24:27; EX1003, ¶513. Providing such luxels would have been a natural extension and improvement on Beam's AABH system. EX1003, ¶513.

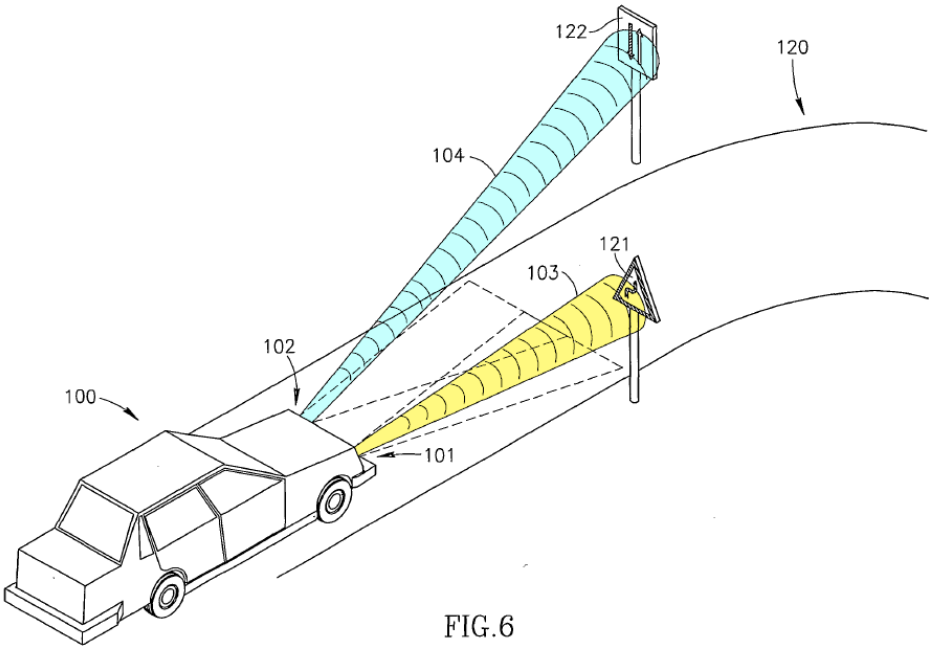


EX1009, FIG. 6 (annotated).

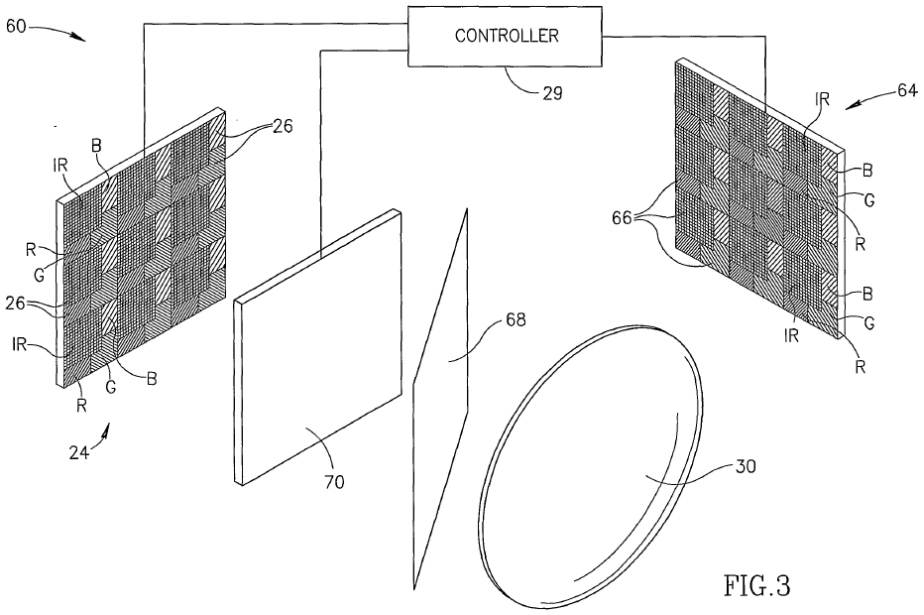


EX1009, FIG. 3.

This hardware combination—Beam's LEDs and Braun's differently colored luxels including IR/UV wavelengths—would have provided Beam-Thominet with different colored spatial distributions for different situations. *Id.*, ¶514. This would have been combining prior-art elements or a simple substitution of one known element for another (Beam's/Braun's respective arrays) according to known methods to yield predictable results (improved visibility and safety). *Id.*, ¶514; *KSR* at 415-418.

A POSA would have had a reasonable expectation of success combining Beam-Thominet and Braun, for example, by modifying Beam's LEDs with Braun's colored LEDs to provide colored light sources with IR/UV wavelengths for different functions. EX1003, ¶515. This would have been routine and well within a POSA's skill due to the similarities in Beam-Thominet's and Braun's systems—their

common components were well-known and there would have been no limitations for a POSA to make such modifications. *Id.*, ¶¶515-516.

**B. Claim 6**

Beam-Thominet's LED array "emit[s] light of *different colors*." EX1005, 5:33-54, 1:54-59, FIGS. 1, 1C-1D, 2, 4-7, 3:37-45, 4:26-59, 3:62-64, 5:3-16, 8:4-17; EX1006, ¶¶5, 27, FIGS. 1B-2; EX1003, ¶¶517-518.

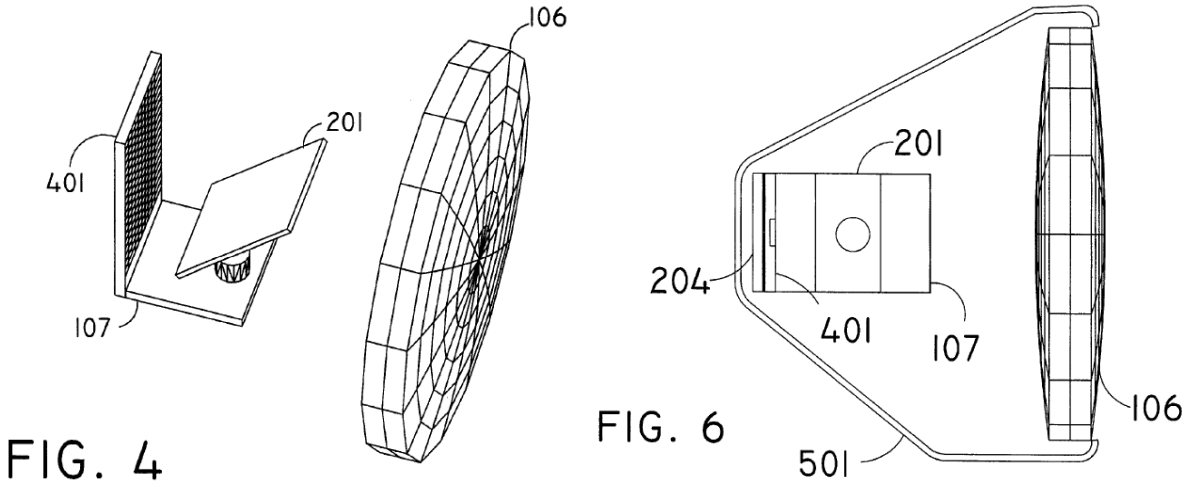


EX1005, FIGS. 4, 6.

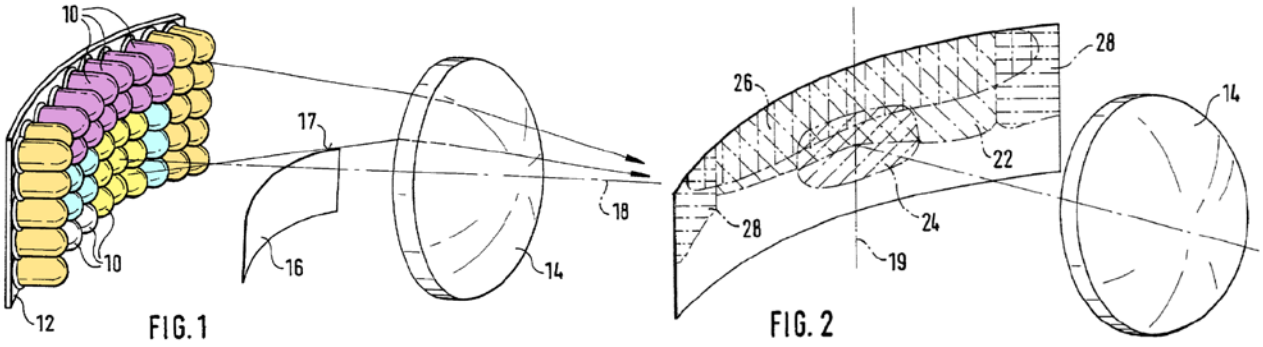


EX1006, FIGS. 1-2 (annotated).

Braun's luxels include IR/UV light. EX1009, 14:21-30, 5:22-25, FIGS. 2-3, 5-6, 18:13-14; EX1003, ¶519.

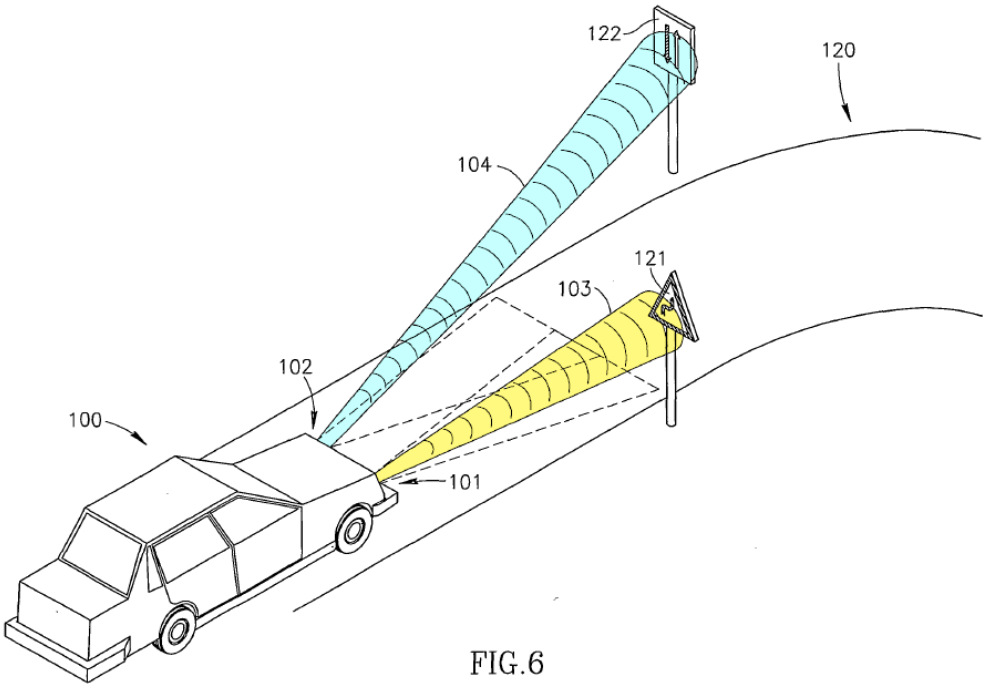


EX1009, FIG. 6 (annotated).

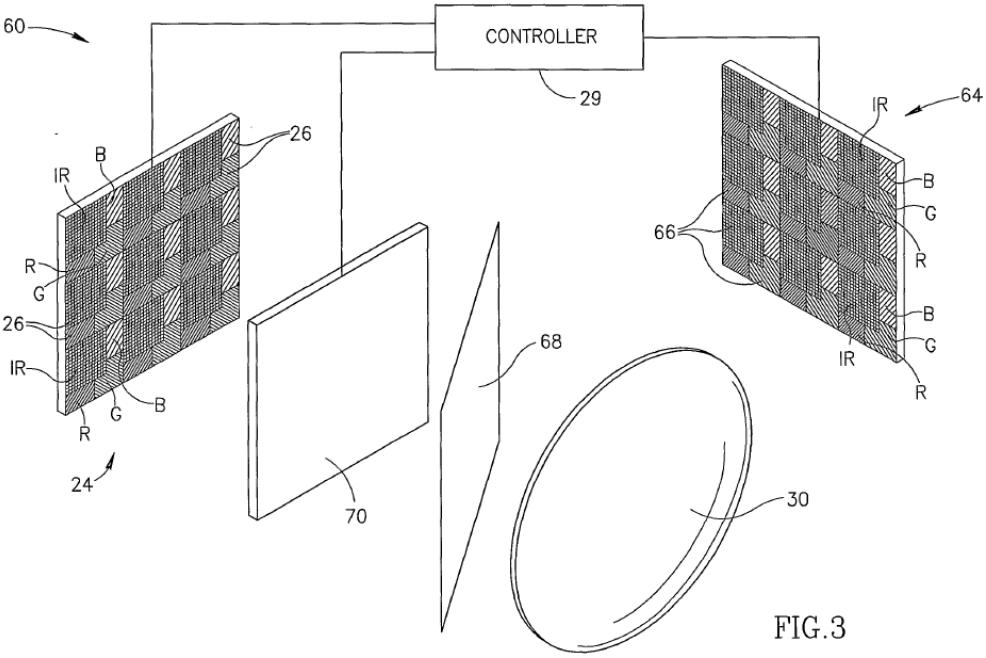


EX1009, FIG. 3.

*Supra* Section IX.A; EX1003, ¶¶506-515, 520-532.

Thus, Beam-Thominet-Braun renders obvious claim 6. EX1003, ¶532.

## X. GROUND 6: THE COMBINATION OF BEAM, THOMINET, STAM, AND BRAUN RENDERS OBVIOUS CLAIM 46.

### A. A POSA would have been motivated to combine Braun with Beam-Thominet-Stam with a reasonable expectation of success.

A POSA would have been further motivated to combine Braun with Beam-Thominet-Stam. *Supra* Section IX.A; EX1003, ¶¶506-515, 533.

### B. Claim 46

Claim 46 is patentably indistinct from claim 6. Claim 46 is therefore disclosed as discussed above. *Supra* Section IX.B; EX1003, ¶¶534-536.

## XI. GROUND 7: THE COMBINATION OF KARLSSON AND HARBERS RENDERS OBVIOUS CLAIMS 1-5, 7-8, 10-14, 18-19, 37-45, 47-48, 50-53, AND 57-58.

Karlsson discloses claims 1-5, 7-8, 10-14, 18-19, 37-45, 47-48, 50-53, and 57-58. The specific portions of Karlsson that disclose each feature are provided and explained below. To avoid doubt, Karlsson is combined with Harbers, rendering the claims obvious. EX1003, ¶¶103-112, 537.

**"light clusters" [1.2]/[37.2]**

Karlsson's "spotlight beams 34 [are]…a *grid of separate light sources*, such as *LEDs*…controlled either *individually* or in *groups*." EX1010, 11:25-28, 14:1-9, FIGS. 3, 6, 14. Spotlight beams may also come from "*light modulator means*." *Id.* Each spotlight beam is a directional "cluster" or "source," having its own independent *direction* (aiming) that combines to form the headlamp beam, so the combination of Karlsson's spotlight beams form at least two light clusters/sources to

provide illumination in desired subsections. *Id.*, 4:25-31, 14:1-15, FIGS. 6, 14; EX1003, ¶538. Karlsson also discloses clusters with at least two spotlight beams. EX1010, 14:1-30, FIGS. 6, 14; EX1003, ¶538.

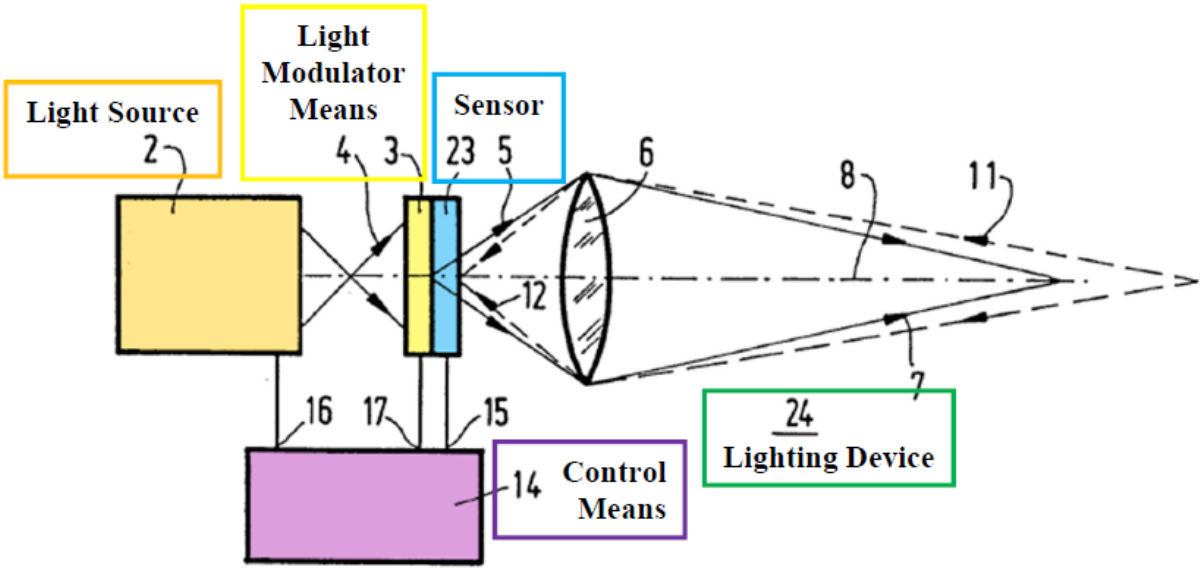


EX1010, FIG. 3 (annotated).

Thus, Karlsson discloses "a plurality of light clusters" as in [1.2]/[37.2]. EX1003, ¶539.

If Patent Owner argues, incorrectly, Karlsson does not disclose [1.2]/[37.2], Harbers does. EX1003, ¶¶540-541.

**"predefined threshold" [37.8]/[37.9]**

Karlsson's "spotlight sources indicated at D provide the *dipped light function*." EX1010, 19:23-27, FIGS. 14-15, 1:27-29, Abstract, 1:16-18. Thus, Karlsson includes a "predefined" illuminance: a "dipped" illuminance. EX1003, ¶¶542-544. Illumination in shaded areas (outside emitted light beam 50) is "*no light*

*at all* or light having a low intensity is emitted in those directions from which light is detected" (no intensity in shaded area is *below* Karlsson's predefined *dipped* illuminance: <u>shaded illuminance < dipped illuminance</u>), and illumination in non-shaded areas (within emitted light beam 50) is "*higher than* that of conventional *dipped headlights*" and "longer-range *main-beam*" (high intensity in non-shaded area is *above* Karlsson's predefined *dipped* illuminance: <u>non-shaded illuminance > dipped illuminance</u>). EX1010, Abstract, 1:18-24, 9:18-22, 19:23-27, FIGS. 3, 14-15; EX1003, ¶545.

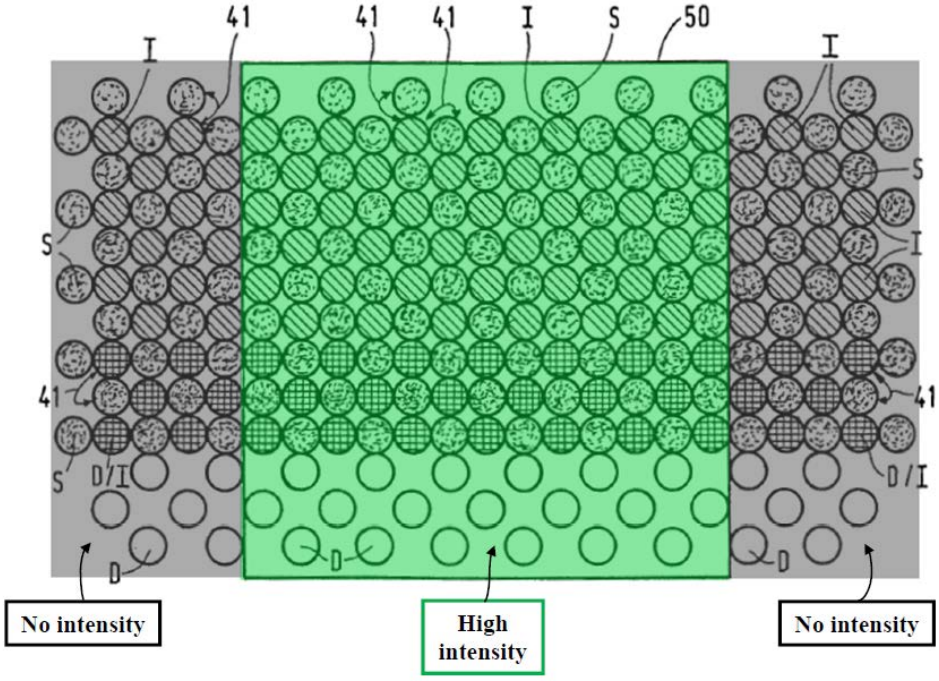


EX1010, FIG. 14 (annotated).

Therefore, Karlsson discloses a "predefined" (dipped) illuminance and outputting illumination "below…[the] predefined threshold" and "above…[the] predefined threshold" as in [37.8] and [37.9]. EX1003, ¶546.

The ’503 patent does not disclose a predefined illuminance value, so a value is not required to satisfy [37.8] and [37.9]. *Id.*, ¶547. A POSA reading Karlsson would have understood Karlsson’s “dipped” illuminance, for example, teaches a “predefined” illuminance, because Karlsson uses the dipped illuminance as a reference point below and above which to output illumination, preventing glare to other vehicles while increasing illumination to other areas. *Id.*, ¶¶547-548; EX1010, 9:18-26, Abstract, 1:18-24, 19:23-27, FIGS. 3, 6, 14-15.

### A. A POSA would have been motivated to combine Karlsson and Harbers with a reasonable expectation of success.

Karlsson discloses “light clusters” with independently controlled angular positions. *Supra* Section XI; EX1003, ¶¶103-108, 537-541, 549. Harbers provides further detail on implementing “light clusters” for different functions. EX1003, ¶¶109-112, 549. It would have been obvious to a POSA to implement Harbers’s multiple directional beam segments—through either software or hardware—for different functions in Karlsson. *Id.*, ¶549. Harbers discloses such an implementation to provide different spatial distributions for improved visibility in different situations (off-axis viewing, bends, narrow roads, motorways, etc., *see* EX1011, 5:14-26, 6:1-7, 6:27-7:32, 9:28-10:5, 13:5-7, FIGS. 1B, 2), thereby improving safety. EX1003, ¶¶549-550; EX1010, 1:10-13, 1:16-27, 4:17-21, 9:18-27.

*First*, including an additional control technique (software implementation) for Karlsson—Harbers’s *known technique* of using multiple directional beam segments

for different functions—would have added different functions to Karlsson for different situations. EX1003, ¶551. Indeed, Karlsson recognizes the safety benefits of identifying "oncoming traffic" and other objects ("road signs etc.") in the field of view and adjusting light accordingly. EX1010, Abstract, 3:17-31, 12:19-35, 2:2-4, 5:16-32, 1:16-26, 4:17-21, 9:18-26; EX1003, ¶¶552-553.

And Harbers's *technique* (software implementation), like Karlsson, seeks to enhance visibility, thereby increasing safety—using multiple beam segments (clusters). EX1011, 5:14-26, 6:1-7, 6:27-7:19, 8:10-18, FIGS. 1B-2; EX1003, ¶554. Opto-electronic elements 11-14 provide differently angled/aimed beam segments 6-6'-6"-6'", 7-7'-7"-7'" to form different spatial distributions. EX1011, 5:14-26, 6:1-7, 6:27-7:19, FIGS. 1B-2, 7:27-32, 9:28-10:5, 13:5-7; EX1003, ¶554.

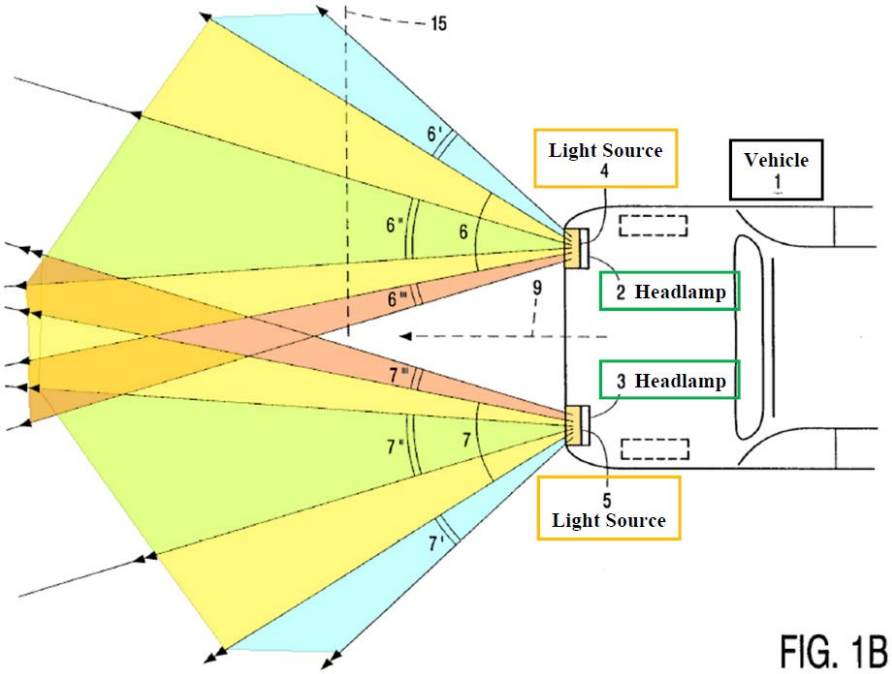


EX1011, FIG. 1B (annotated).

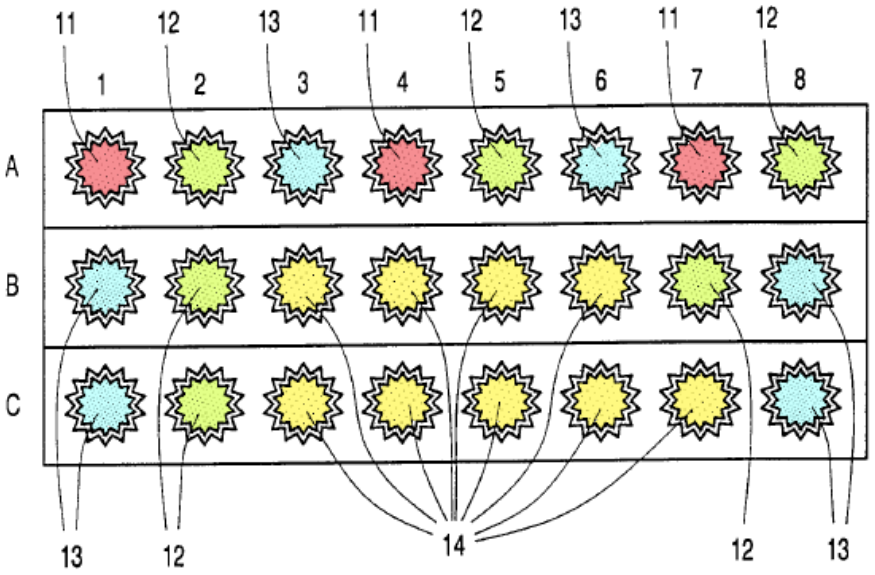


EX1011, FIG. 2 (annotated).

Multiple beam segments (clusters) as in Harbers, implemented with Karlsson's control means 14/spotlight beams 34, would have provided Karlsson with different spatial distributions for different situations beyond reducing glare for drivers. EX1003, ¶555. This application of Harbers's known techniques (software implementation: multiple beam segments for different functions) to Karlsson's similar, known device, in the same way. *Id.*, ¶556; *KSR* at 417. Harbers's known technique is fully described along with its benefits (improved visibility); a POSA would have readily applied it to similar systems in the same ways. *Id.*, ¶556.

A POSA would have had a reasonable expectation of success combining Harbers with Karlsson, for example, by modifying software instructions stored in Karlsson's controller/processor-memory to organize Karlsson's beams into multiple segments (clusters) for different functions. *Id.*, ¶557. This would have been routine

and well within a POSA's skill due to the similarities in Karlsson's and Harbers's adaptive systems—their common components were well-known and there would have been no limitations for a POSA to make such modification. *Id.*, ¶558.

*Second*, a POSA would have sought to incorporate *known components* (hardware implementation) of Harbers's opto-electronic elements 11-14 on a "curved substrate" (with differently aimed opto-electronic elements 11-14, *see* EX1011, 5:14-26, 6:1-7, 6:27-7:32, FIGS. 1B-2) into Karlsson. *Id.*, ¶559. This, too, would have provided different spatial distributions for different situations. *Id.*, ¶559.

Through its *system components* (hardware implementation), Harbers's opto-electronic elements 11-14 are arranged on a "curved substrate," with different aimings, and provide beam segments (clusters) for different situations. EX1011, 5:14-26, 6:1-7, 6:27-7:19, FIGS. 1B-2, 7:27-32, 9:28-10:5, 13:5-7; EX1003, ¶560.

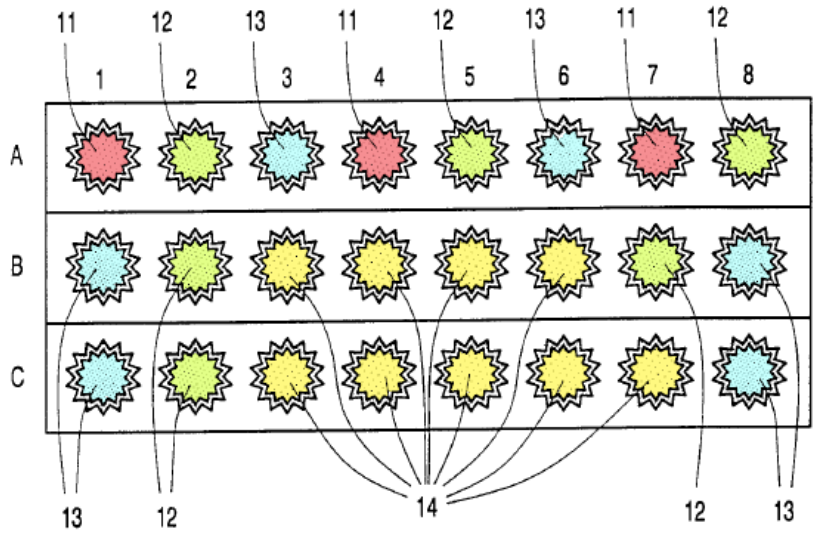


EX1011, FIG. 2 (annotated).

Like the software implementation, this hardware combination including Harbers's differently aimed opto-electronic elements on a curved substrate, would have provided Karlsson with different spatial distributions for different situations. EX1003, ¶561. This would have been combining prior-art elements or a simple substitution of one known element for another (Karlsson's lighting means 2, 3 on a flat substrate and Harbers's opto-electronic elements on a curved substrate) according to known methods to yield predictable results. *Id.*, ¶561; *KSR* at 415-416.

A POSA would have had a reasonable expectation of success combining Harbers with Karlsson, for example, by simply modifying the Karlsson's flat substrate as in Harbers's curved substrate to provide multiple light clusters/sources for different functions. EX1003, ¶562. This would have been routine and well within a POSA's skill due to the similarities in Karlsson's and Harbers's adaptive systems—their common components were well-known and there would have been no limitations for a POSA to make such modifications. *Id.*, ¶¶563-564.

### B. Claims 1 and 37

#### 1. [1.P]/[37.P]

Karlsson discloses a vehicle headlight system. EX1010, 20:16-32, Abstract, FIG. 16; EX1003, ¶¶565-568.

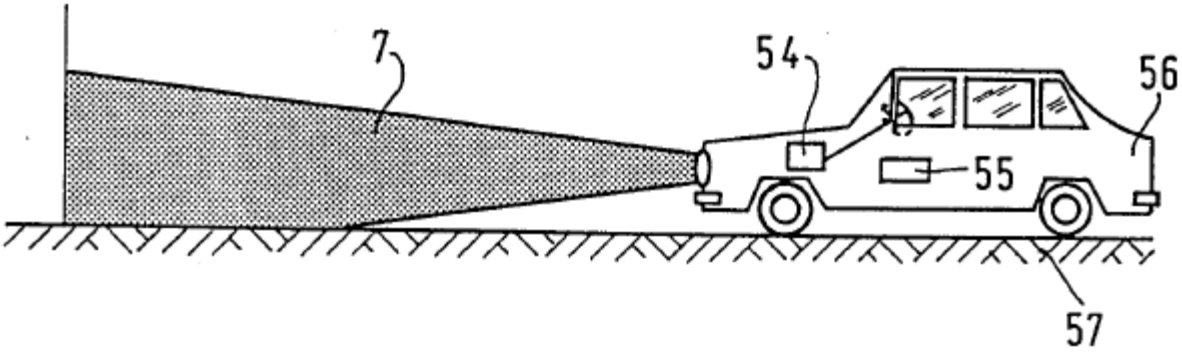


EX1010, FIG. 16.

**2. [1.1]/[37.1]**

Karlsson's lighting device 1, 24 is affixed to car 56. EX1010, 20:16-32, FIGS. 1, 3, 16, Abstract, 9:18-22; EX1003, ¶¶569-571.

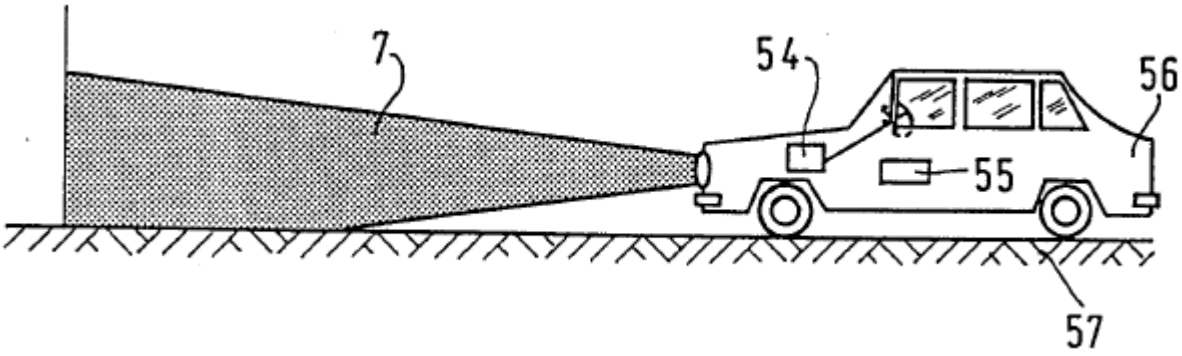


EX1010, FIG. 16.

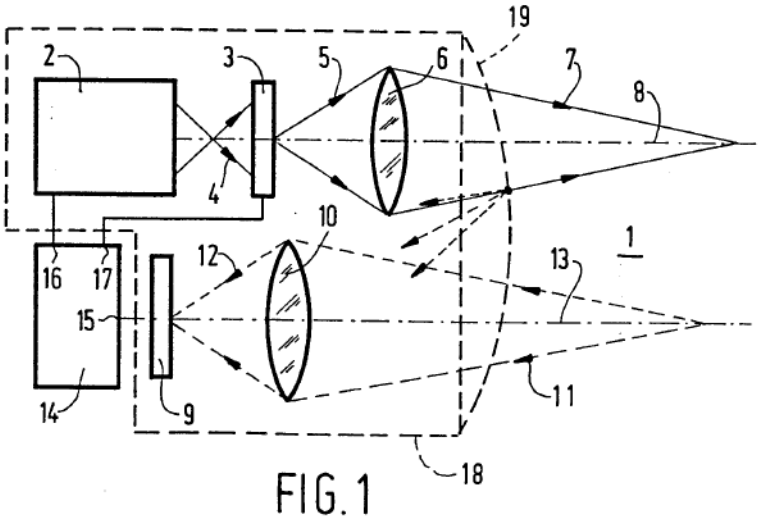


FIG. 1

EX1010, FIG. 1.

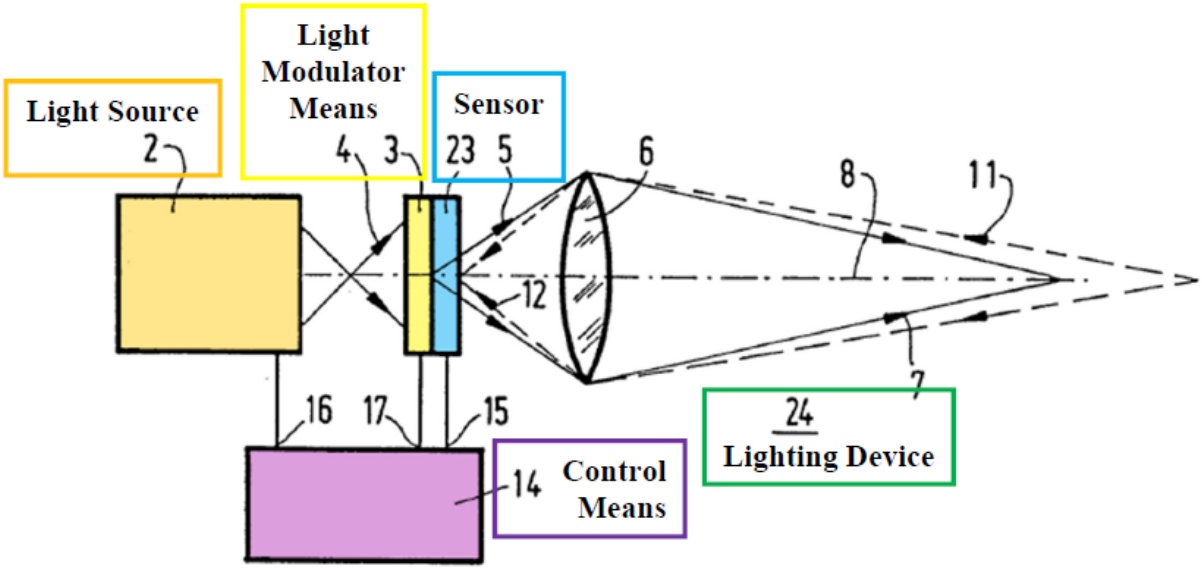


EX1010, FIG. 3 (annotated).

**3. [1.2]/[37.2]**

*See supra* Section XI; EX1003, ¶¶537-548, 572-575. Karlsson's *spotlight beams 34* may be "made up of…*light modulators* [which are] controlled to transmit light…for a *group* of spotlight beams." EX1010, 4:25-31, 14:1-15, FIGS. 3, 6, 11:25-28, 19:29-33, FIG. 14; EX1003, ¶575. Each spotlight beam is a "cluster" that combines to form the headlamp beam; so the combination of Karlsson's spotlight beams form at least two light clusters. EX1010, 4:25-31, 14:1-15, FIGS. 6, 14; EX1003, ¶575-578. Karlsson also discloses clusters with at least two spotlight beams. EX1010, 14:1-30, FIGS. 6, 14; EX1003, ¶576.

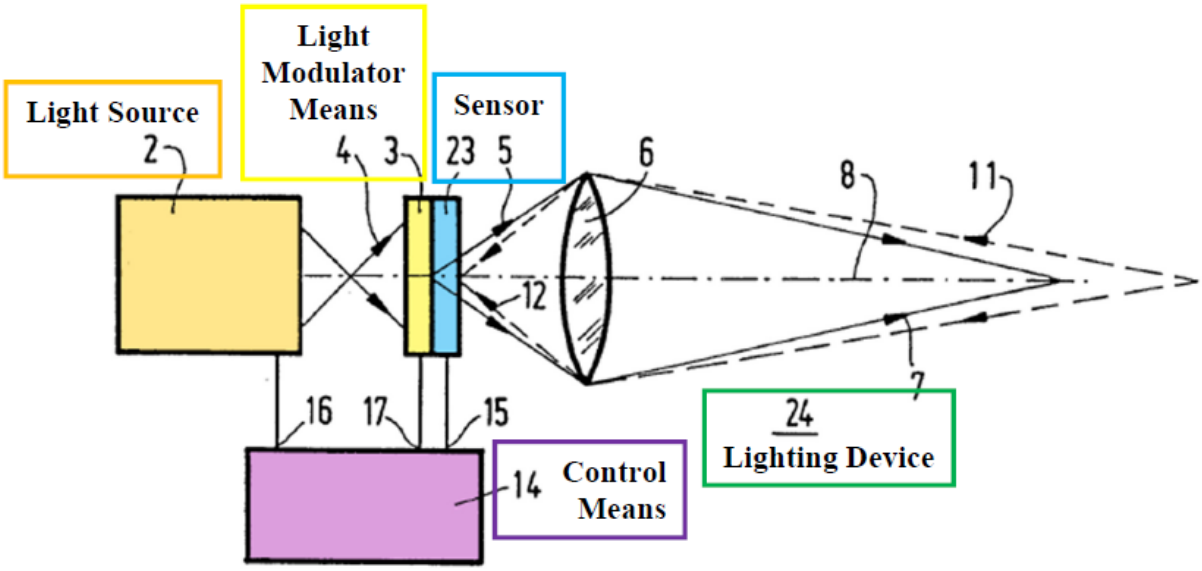


EX1010, FIG. 3 (annotated).

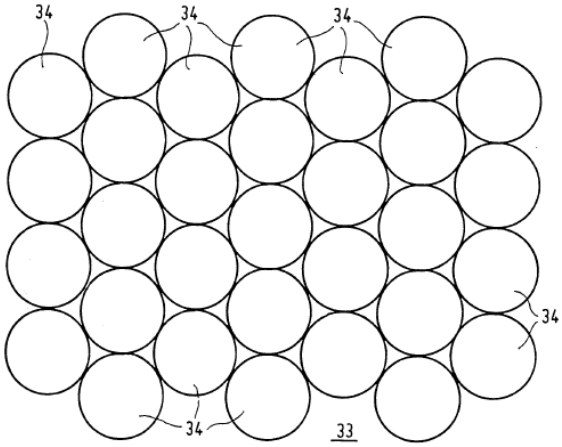


FIG. 6

EX1010, FIG. 6.

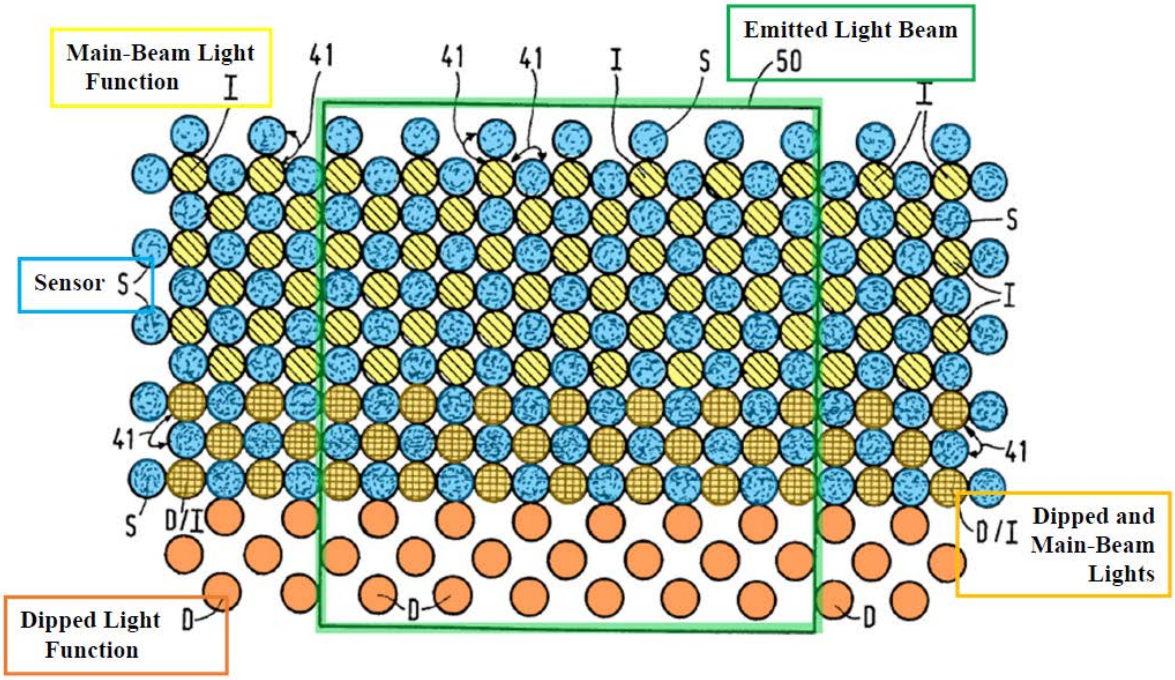


EX1010, FIG. 14 (annotated).

If Patent Owner argues, incorrectly, Karlsson does not disclose [1.2]/[37.2], it would have been obvious in view of Harbers. EX1003, ¶¶549-563, 579-598*; supra* Section XI.A.

Harbers's opto-electronic array on a curved substrate emits light beam segments for particular functions. EX1011, 5:14-26, 6:1-7, 6:27-7:19, FIGS. 1B, 2, 7:27-32; EX1003, ¶580. For example, Harbers's beam segment 6, 7 is a "wide…passing beam" (e.g., first cluster), beam segment 6', 7' illuminates "the shoulder of the road" (e.g., second cluster), and beam segment 6", 7" illuminates "the center of the road" (e.g., third cluster). EX1011, 7:1-17, FIG. 1B; EX1003, ¶580.

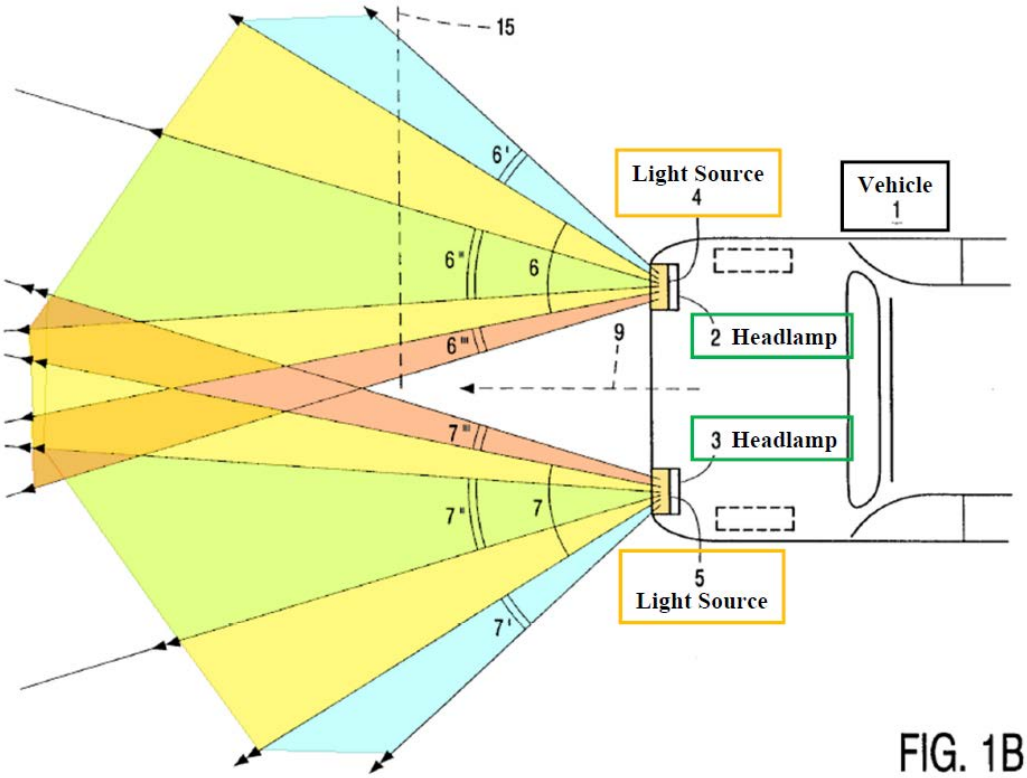


EX1011, FIG. 1B (annotated).

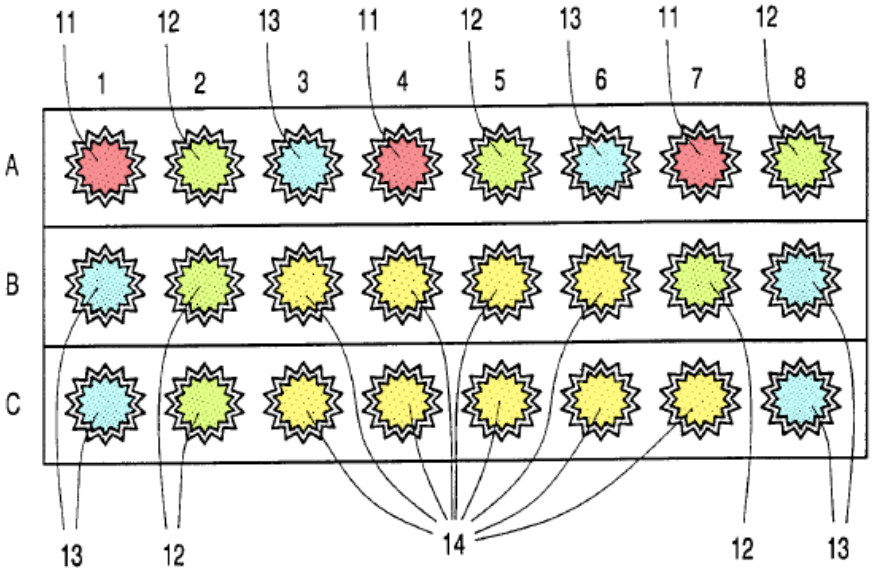


EX1011, FIG. 2 (annotated).

**4. [1.3]/[37.3]**

Karlsson's control means 14 controls and "light beam 7 having a *desired pattern* and a *desired intensity* is emitted." EX1010, 9:9-22, FIGS. 3, 6, 14-15, 3:27-31, 4:25-29, 5:16-23, 2:7-9, 19:29-33; EX1003, ¶¶599-602. Thus, "intensity" and "pattern" are "different illumination characteristics." EX1003, ¶¶603-604; EX1001, 16:43-50, 2:28-30.

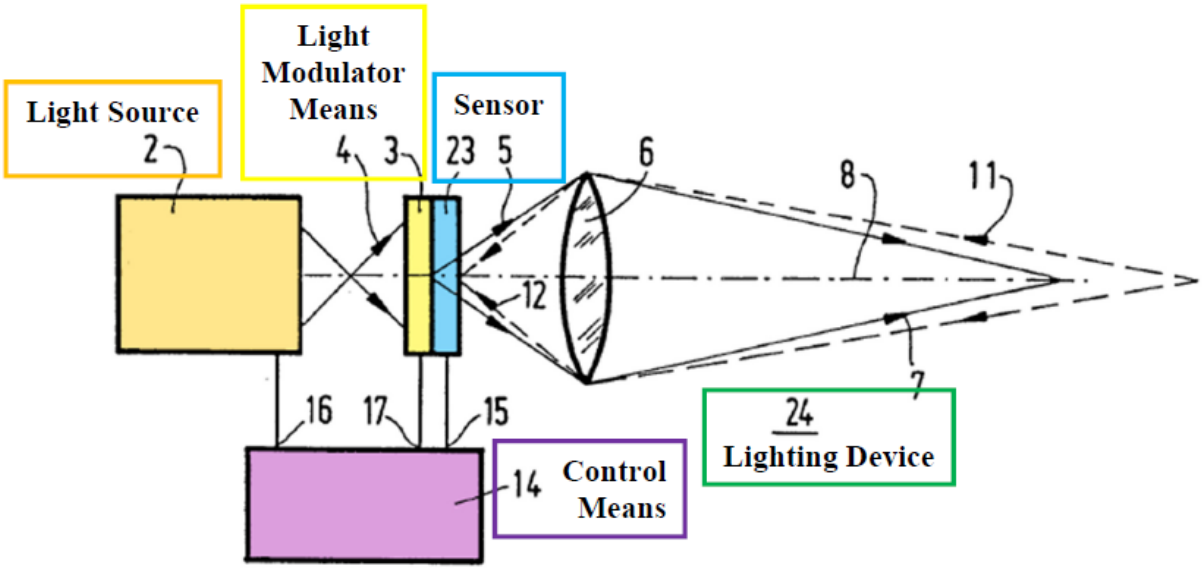


EX1010, FIG. 3 (annotated).

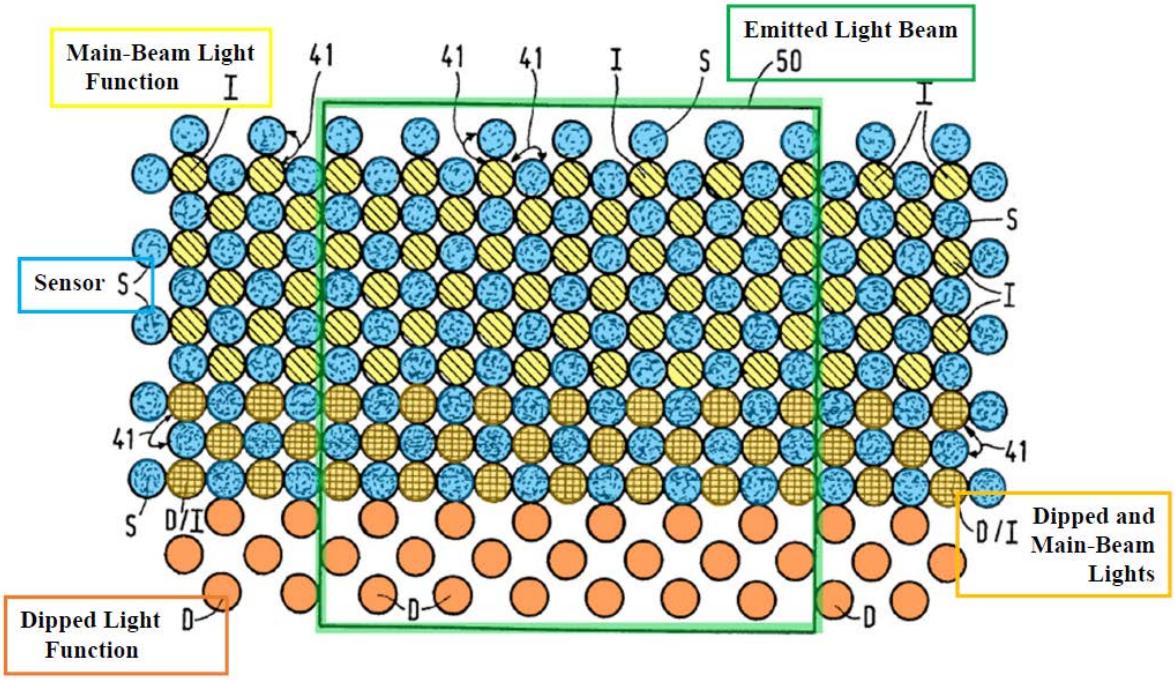


EX1010, FIG. 14 (annotated).

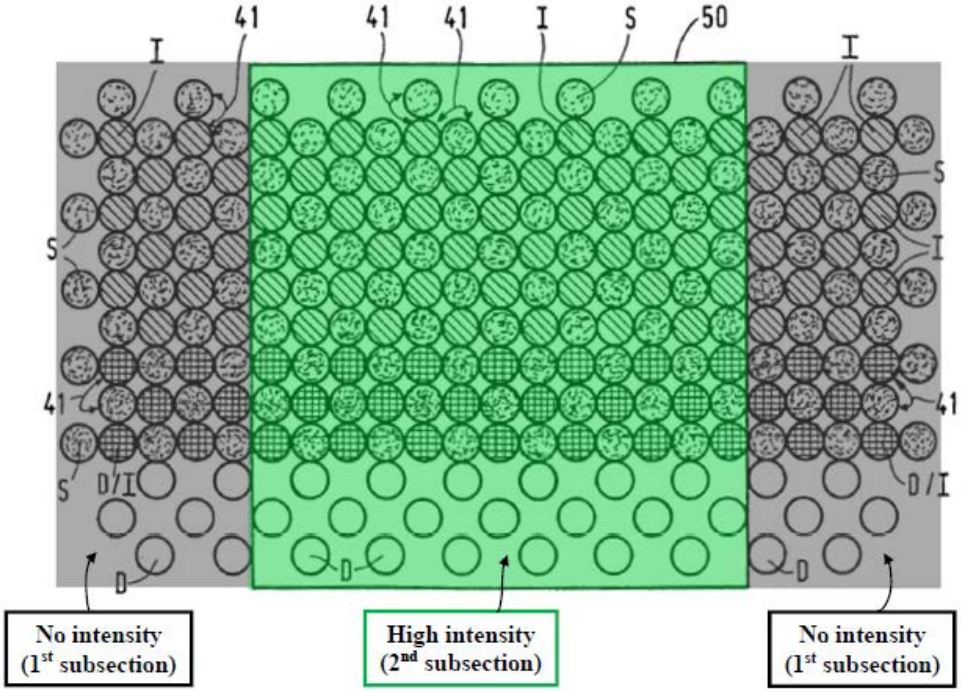


EX1010, FIG. 14 (annotated).

**5. [1.4]/[37.4]**

Karlsson's "light-sensitive sensor…*detects* the distribution and the intensity of light in the *area ahead of a vehicle*" and "*control means 14...control the lighting means 2, 3*…[so] *light beam 7* having a *desired pattern* and a *desired intensity* is emitted." EX1010, 2:2-4, Abstract, 9:9-17, FIGS. 3, 14-15, 3:17-21, 12:19-24, 5:16-32, 3:27-31; EX1003, ¶¶605-608. Thus, Karlsson discloses "light clusters" and "at least two…light clusters" operate to create a headlight beam. *See supra* Section XI.B.3; EX1003, ¶¶572-598, 609-611.

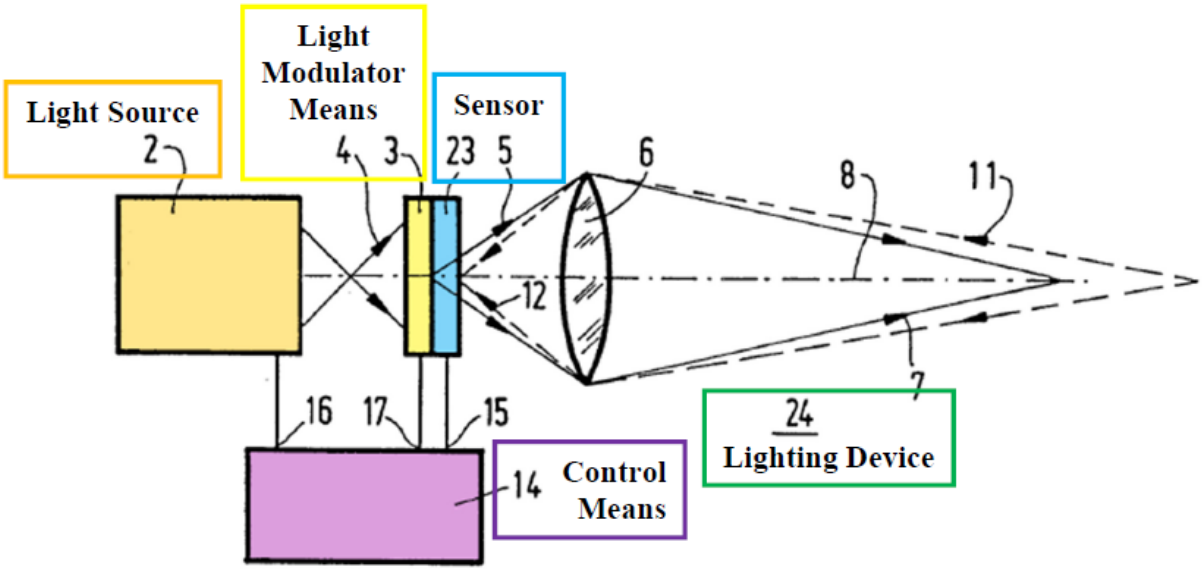


EX1010, FIG. 3 (annotated).

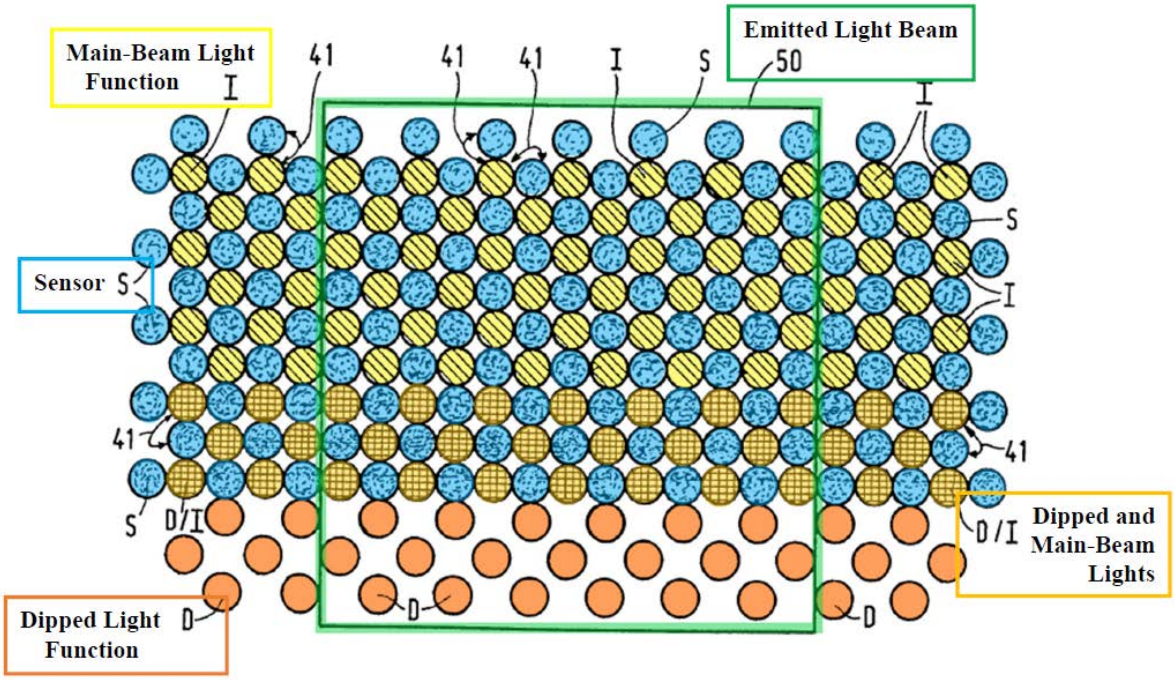


EX1010, FIG. 14 (annotated).

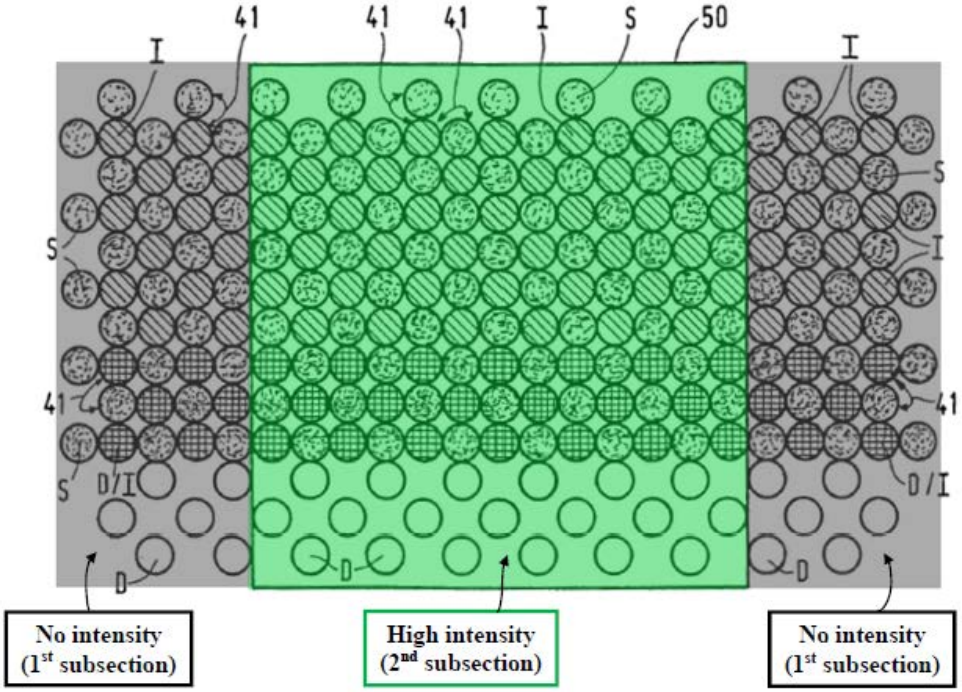


EX1010, FIG. 14 (annotated).

**6. [1.5]**

Karlsson "*controls…light beam 7* having a *desired pattern* and a *desired intensity*." EX1010, 9:9-17, FIGS. 3, 14-15, 20:1-3 ("*control electronics 41*"), 2:7-9, 19:29-33, 20:12-32, 21:36-22:4; EX1003, ¶612. Thus, Karlsson's controller includes "electronic control circuitry" (control electronics/signaling links). EX1010, 19:34-20:15, 21:36-22:4, FIGS. 14-15; EX1003, ¶613. Thus, Karlsson's controller/processor sends control signals to illuminator (light modulator means) to control spotlight beams to "independently operate the light clusters." EX1010, 5:4-15, 9:9-17, 19:34-20:5; FIGS. 3, 14-15; EX1003, ¶614-615.

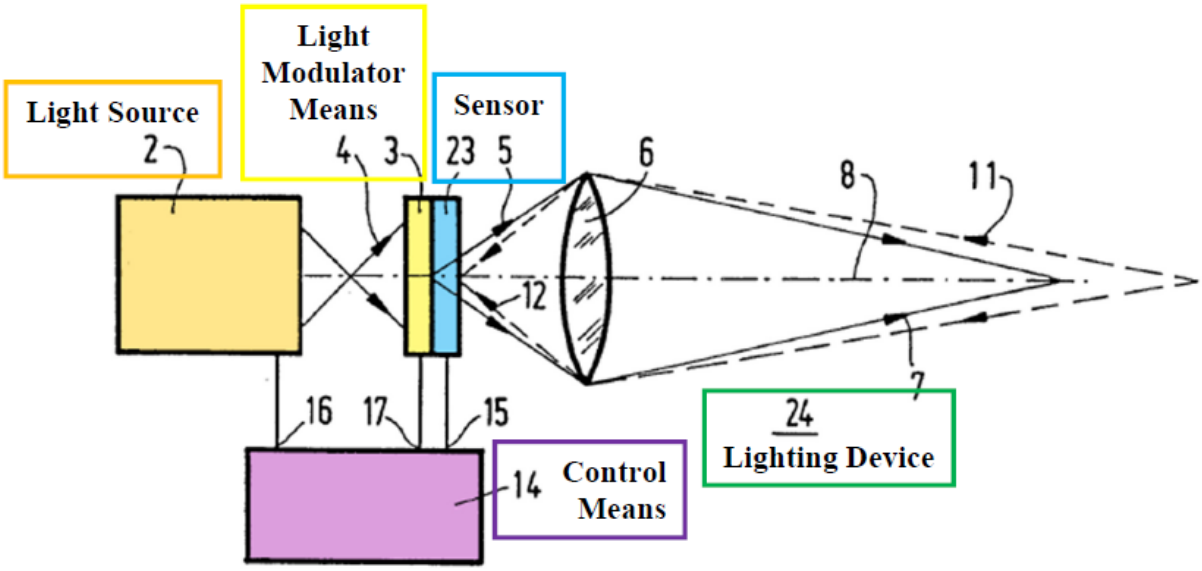


EX1010, FIG. 3 (annotated).

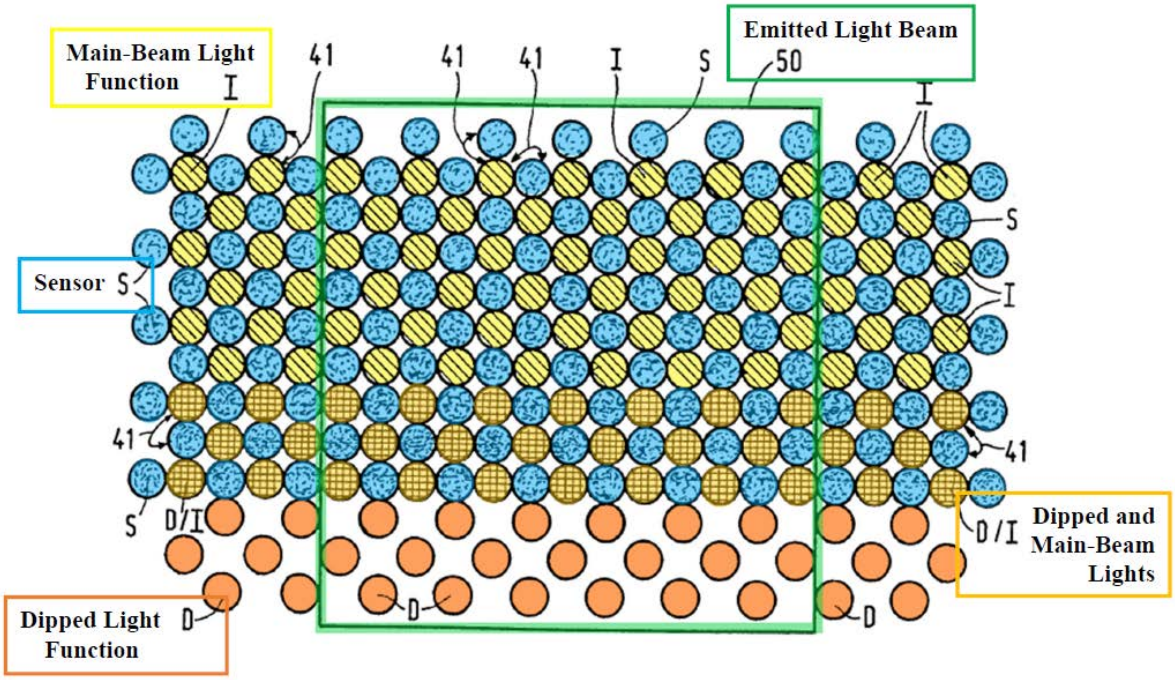


EX1010, FIG. 14 (annotated).

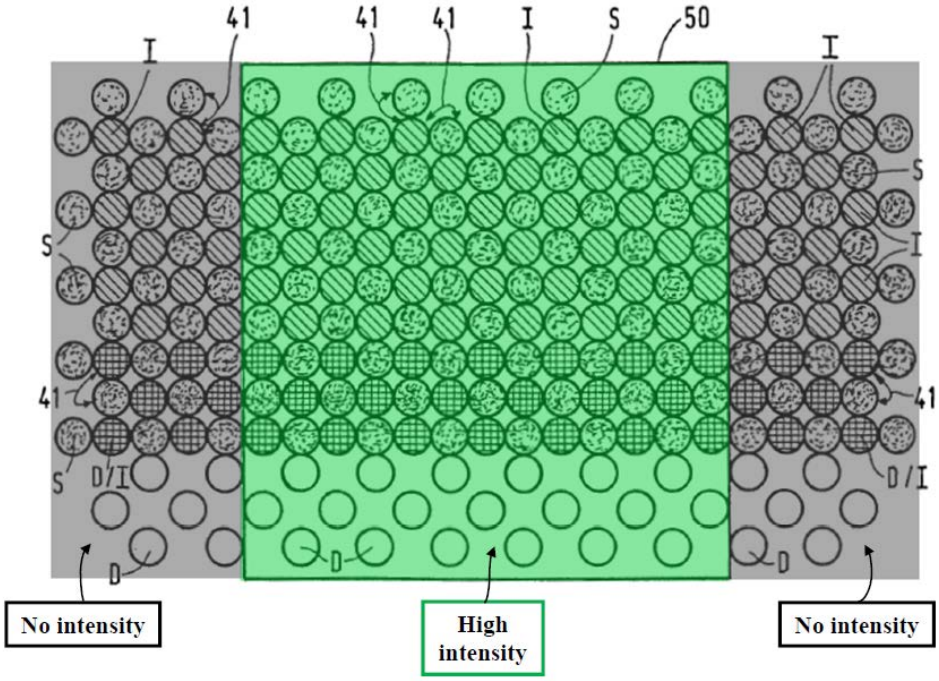


EX1010, FIG. 14 (annotated).

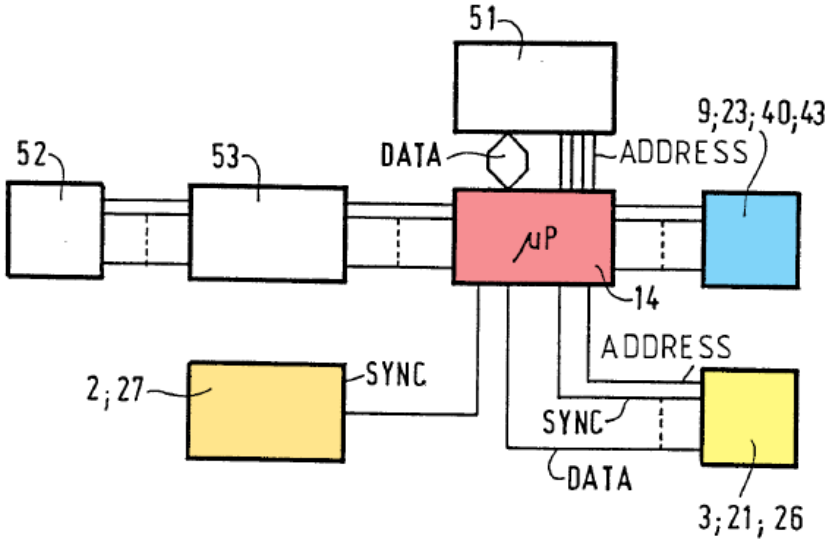


EX1010, FIG. 15 (control circuitry) (annotated).

**7. [1.6]/[37.5], [37.6]**

Karlsson's "*light-sensitive sensors* 9 and 23…*determin[e]* the *direction* and the *intensity* of the *detected light 11*." EX1010, 12:19-24, 2:2-4, Abstract, FIGS. 3, 14-15, 3:27-31, 19:18-21, 5:16-23, 3:17-20, 9:6-8, 5:28-32; EX1003, ¶¶616-619. The detected light data is "predefined as pertinent" because Karlsson uses "light from oncoming traffic as a parameter to which the pattern…is to be adjusted." EX1010, 5:16-23, FIGS. 3, 14-15; EX1003, ¶¶620-621.

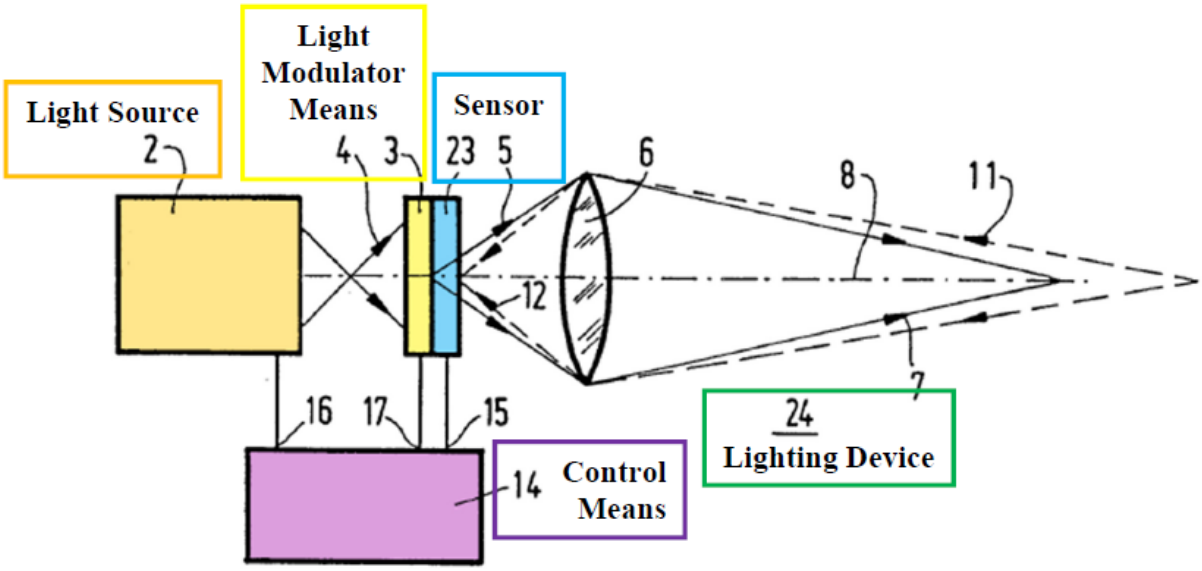


EX1010, FIG. 3 (annotated).

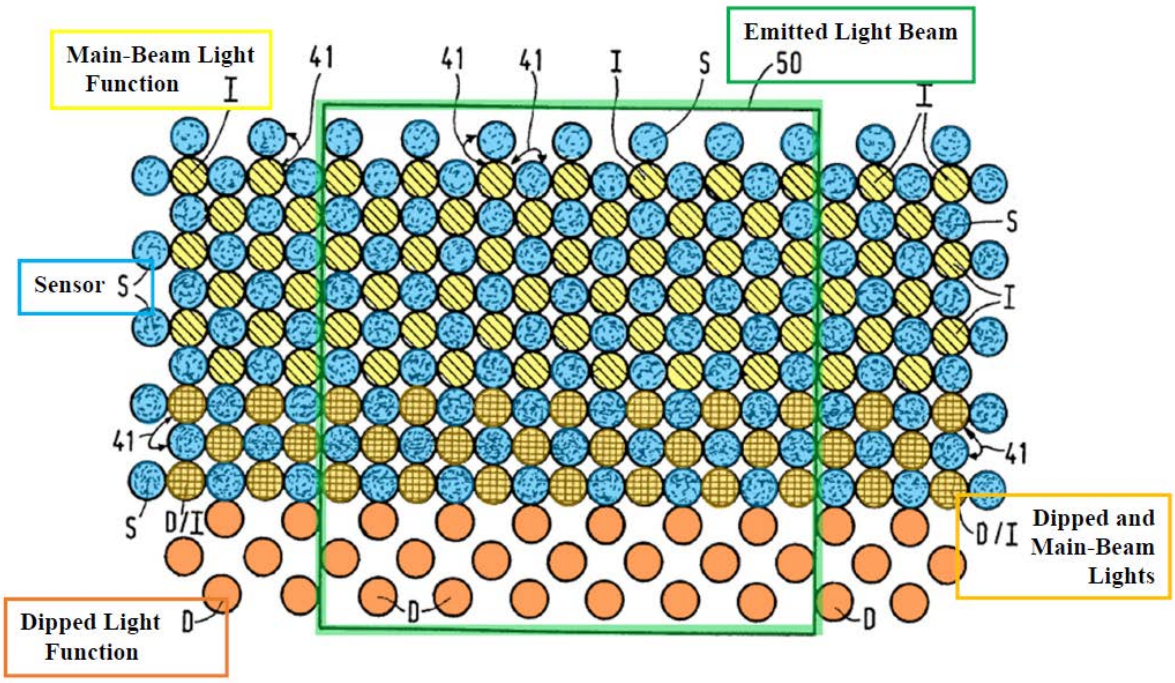


EX1010, FIG. 14 (annotated).

**8. [1.7]**

Karlsson's "*incident light 11* on the *light-sensitive sensor 9*…is *processed* into an *electric control signal* on input 15 of the *control means 14*" and "*memory*

*51*…may be used for *storing* and recording the *various adjustments*." EX1010, 9:9-17, FIGS. 3, 14-15, 21:36-22:4 ("*microprocessor*"), 20:12-32 ("*memory means 51*"), 20:1-3 ("*control electronics 41*"); EX1003, ¶¶622-623.

Thus, Karlsson's controller is "a logical controller including a processor" because Karlsson's "electric diagram…[of] processor-controlled control means 14" (Figure 15) includes processor/microprocessor 14 in communication with memory 51, sensor 9/23, and light modulator 3 (control electronics/signaling links). EX1010, 19:34-20:15, 21:36-22:4, FIGS. 14-15; EX1003, ¶624.

Thus, Karlsson's memory 51 stores "one or more algorithms" in communication with "processor-controlled control means 14" to determine adaptive light beam 7. EX1010, 9:9-17, 12:19-24, 20:12-15, FIG. 15; EX1003, ¶¶625-626.

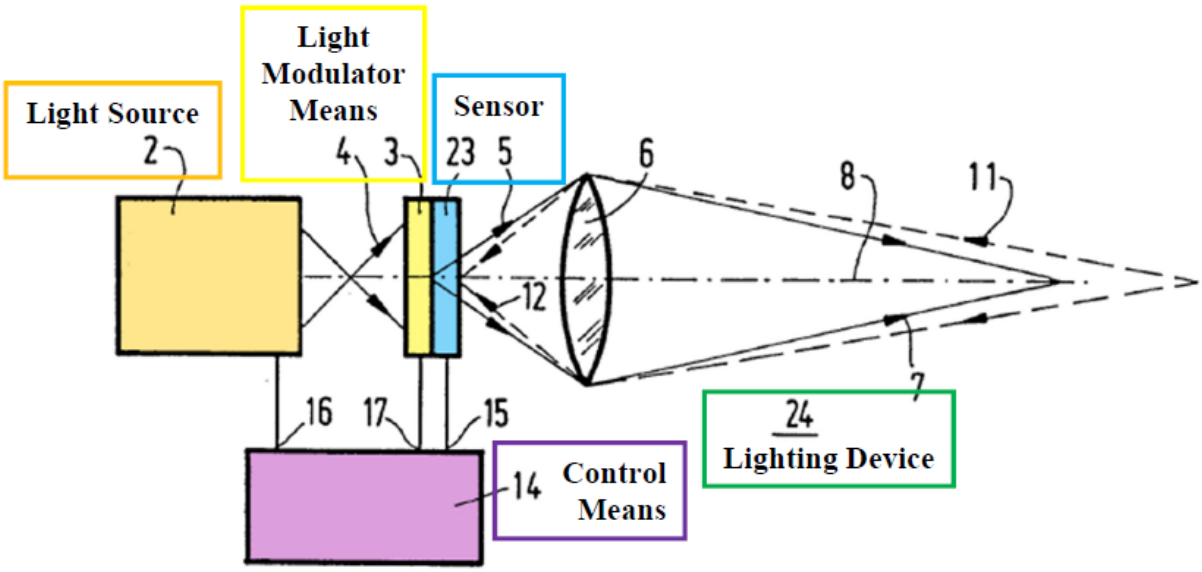


EX1010, FIG. 3 (annotated).

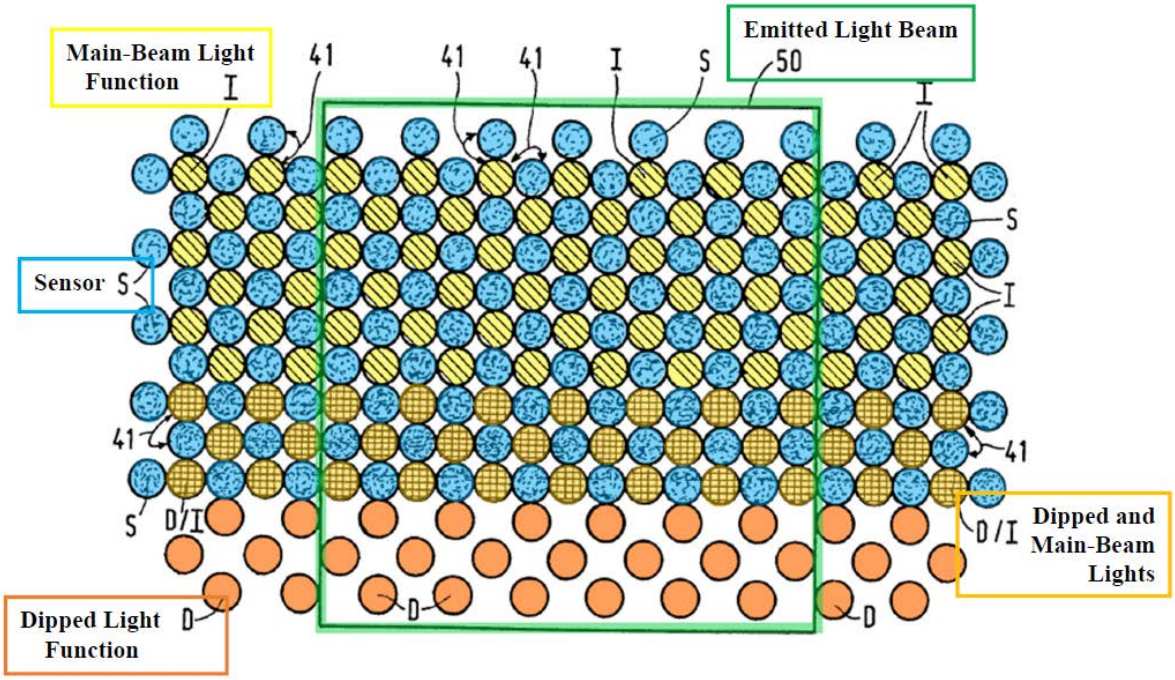


EX1010, FIG. 14 (annotated).

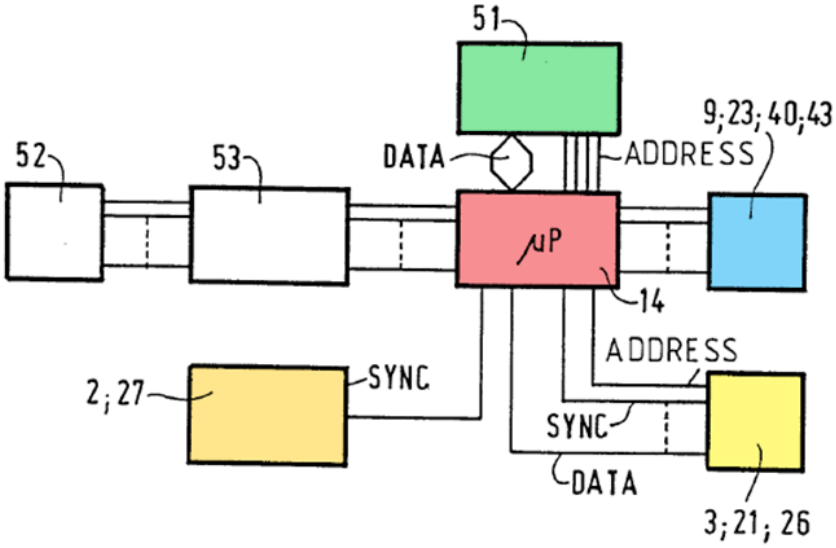


EX1010, FIG. 15 (controller with processor/control circuitry) (annotated).

**9. [1.8]/[37.7]**

Karlsson's "*incident light 11* on the *light-sensitive sensor 9*…is *processed* into an *electric control signal* on input 15 of the *control means 14*." EX1010, 9:9-

17, FIGS. 3, 14-15, 5:16-23, 2:7-9, 3:27-31, 5:28-32, 9:18-26, 20:12-32, 21:36-22:4, 14:26-30; EX1003, ¶¶627-630. Thus, Karlsson's processor processes the data, and uses memory (with algorithms) to "determine an illumination for at least two of the subsections" (shaded area of no intensity/non-shaded area of high intensity). EX1010, 9:9-17, 12:19-24, FIGS. 14-15; EX1003, ¶¶631-632.

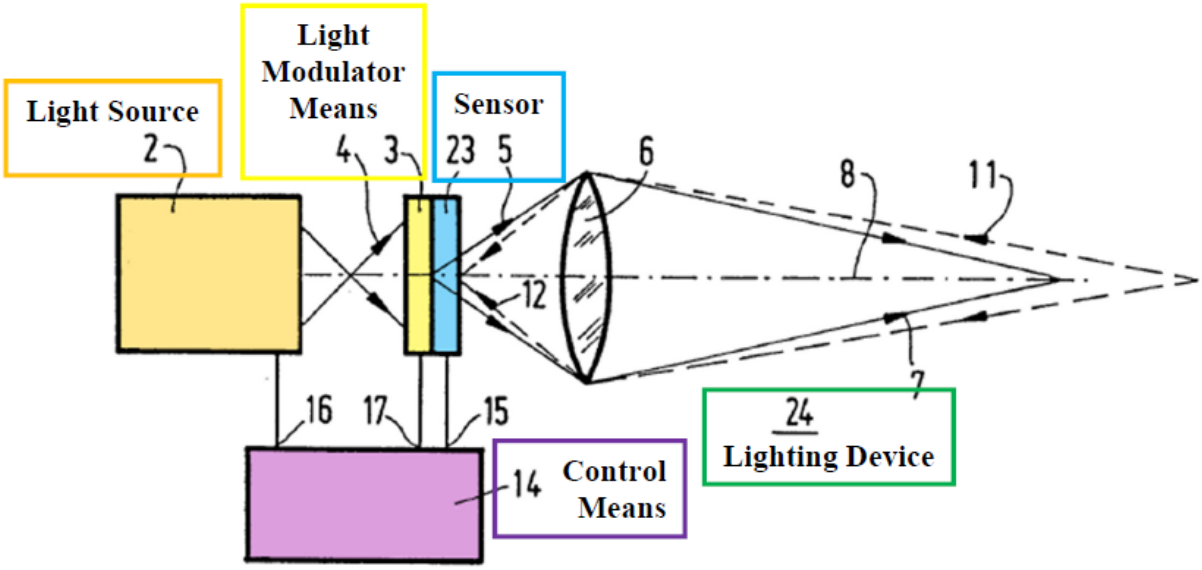


EX1010, FIG. 3 (annotated).

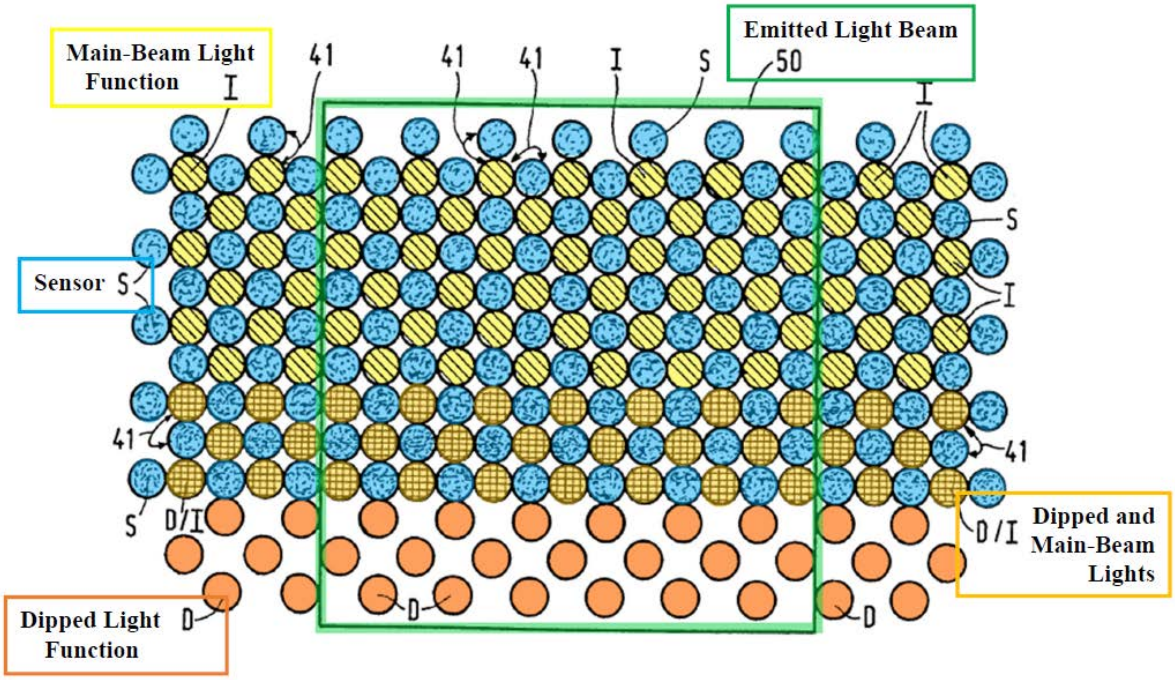


EX1010, FIG. 14 (annotated).

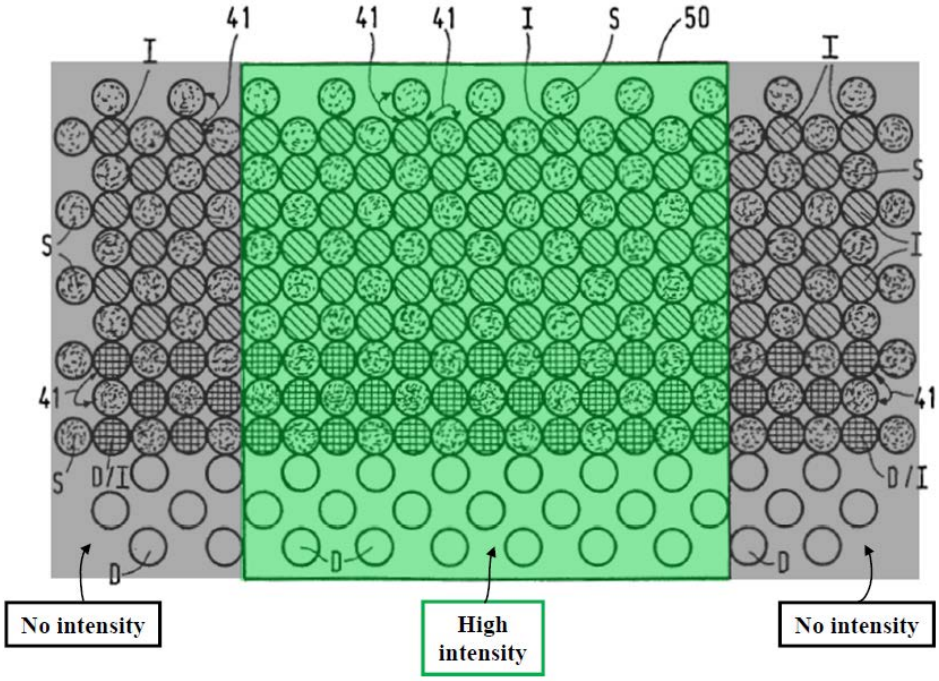


EX1010, FIG. 14 (annotated).

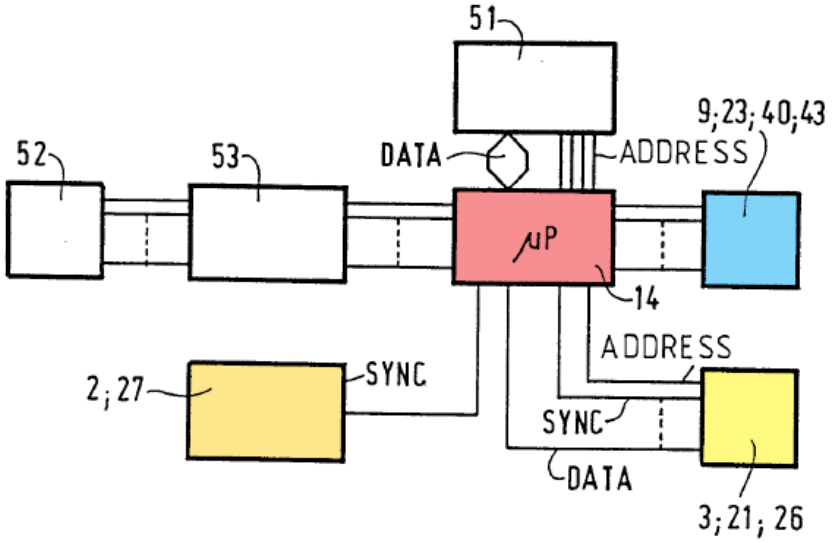


EX1010, FIG. 15 (annotated).

**10. [1.9]**

Karlsson's "light beam 7…[is] controlled…such…that *no light at all* or *light having a low intensity* is emitted…[thus] *glaring or blinding*…is effectively *prevented*." EX1010, 9:9-26, FIGS. 3, 14-15, 19:23-27, 2:7-9, 5:16-32, 14:26-30, 3:27-31; EX1003, ¶¶633-636.

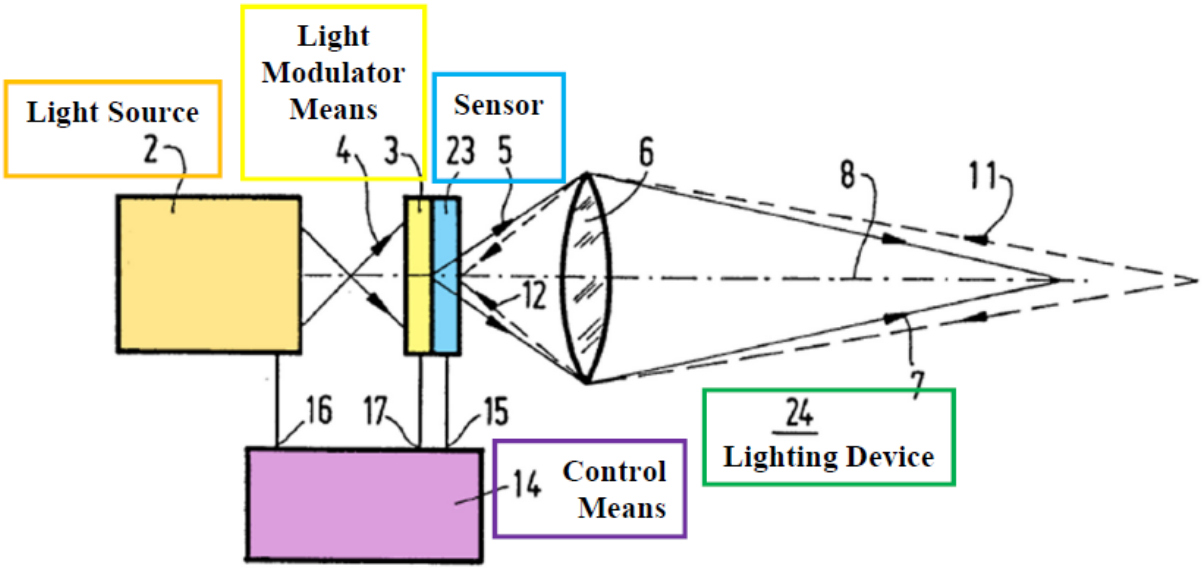

EX1010, FIG. 3 (annotated).

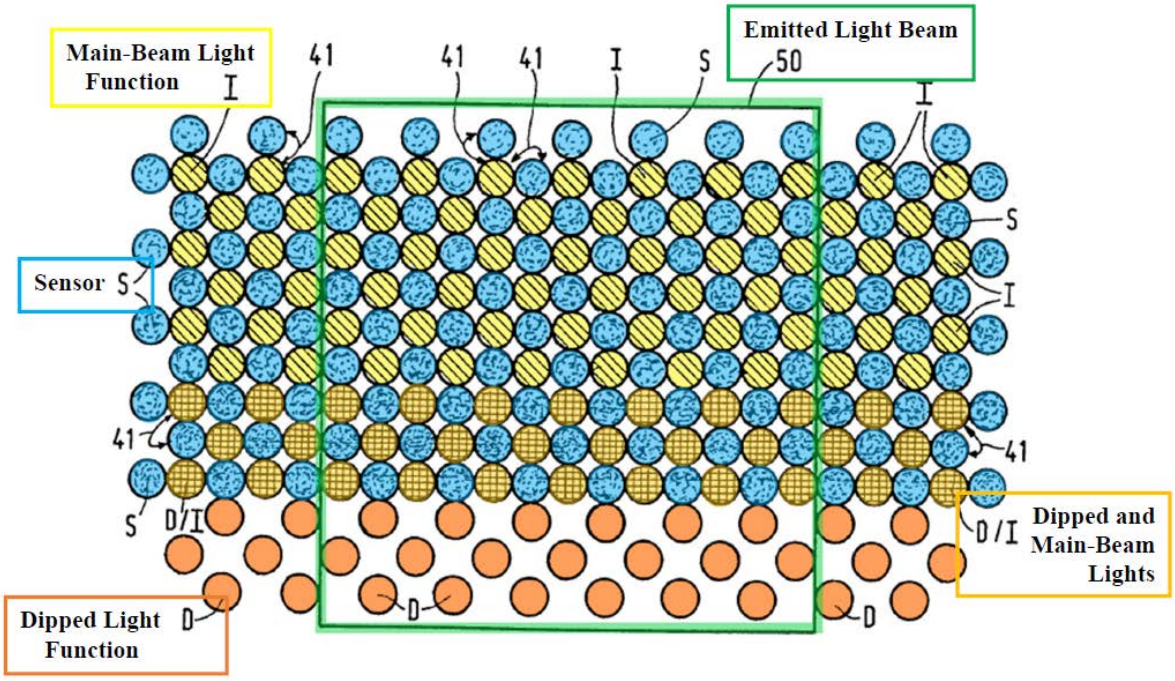


EX1010, FIG. 14 (annotated).

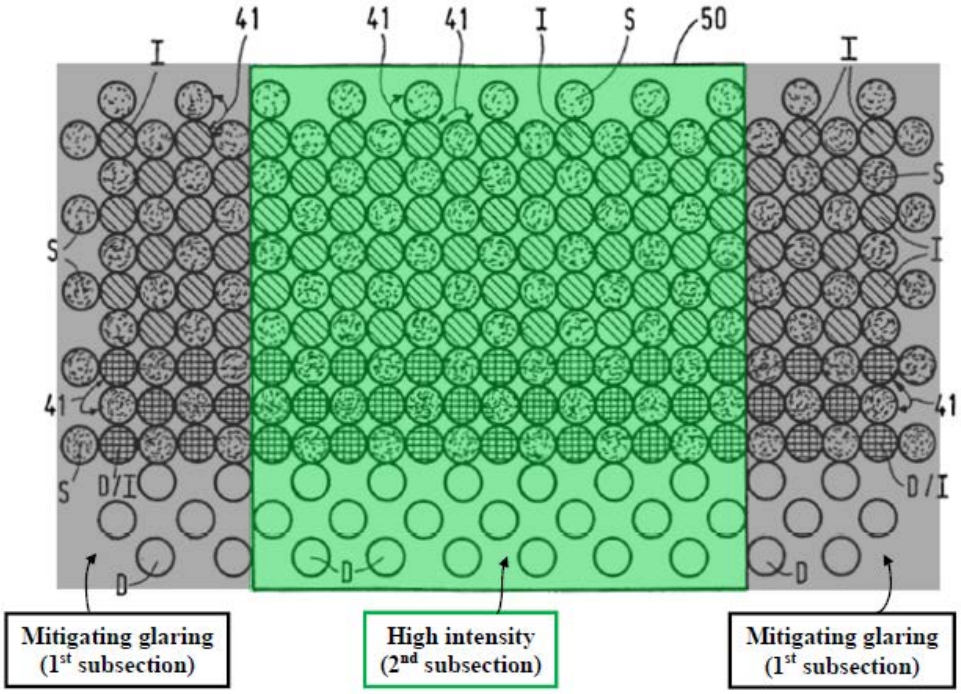


EX1010, FIG. 14 (annotated).

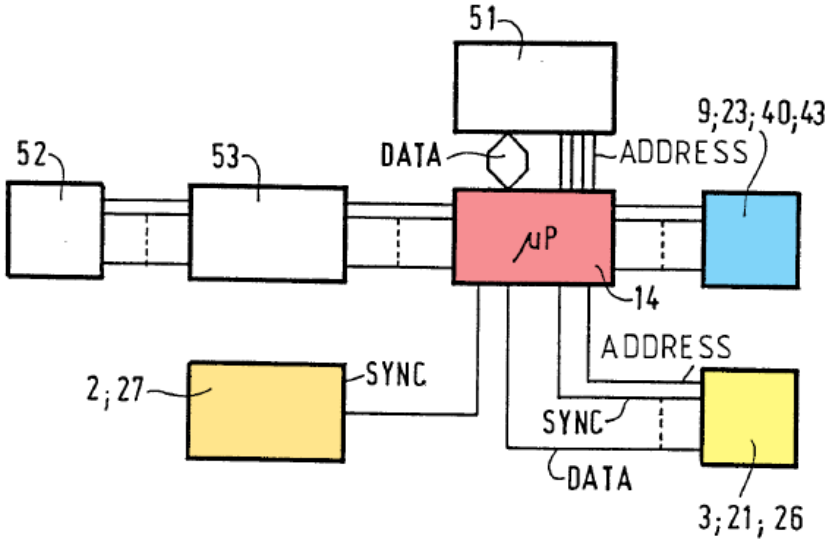


EX1010, FIG. 15 (annotated).

### 11. [1.10]/[37.10][10]

Karlsson's "*lighting means 2, 3*…[are] *controlled by control means*…to *control*…*light beam 7* having a *desired pattern* and a *desired intensity*." EX1010, 9:9-17, FIGS. 3, 14-15, 20:12-32, 21:36-22:4; *see supra* Section XI.B.3; EX1003, ¶¶572-598, 637-641. Thus, Karlsson discloses "adapt[ing]…light-clusters" and "instruct[ing] operation of at least two…light clusters" to create a headlight beam. EX1003, ¶¶642-643.

[10] [37.8]-[37.9] are addressed in Section XII.C.

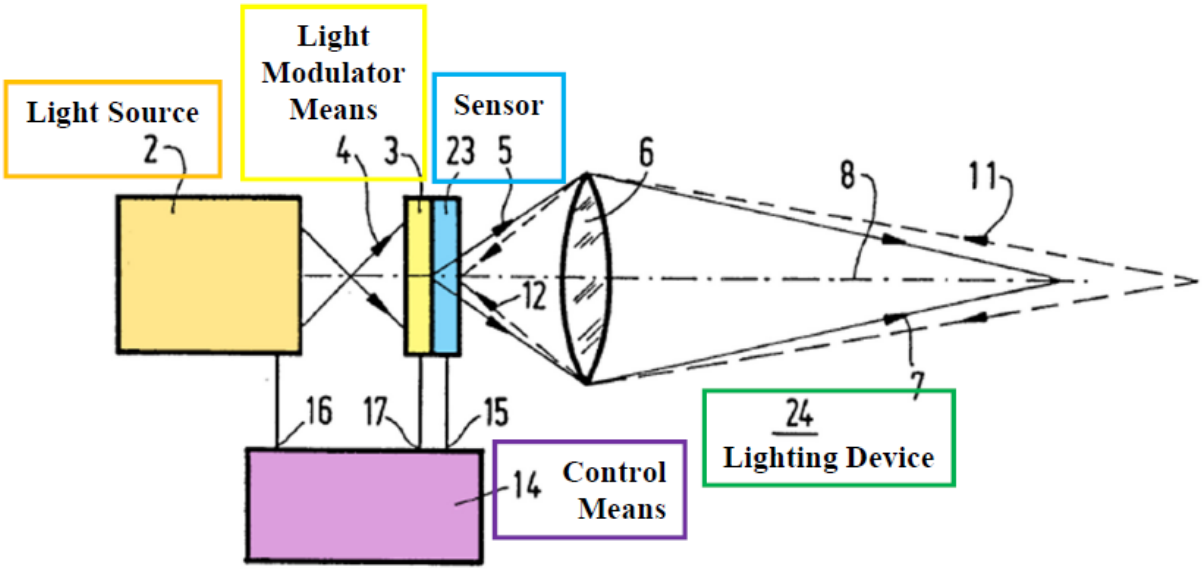


EX1010, FIG. 3 (annotated).

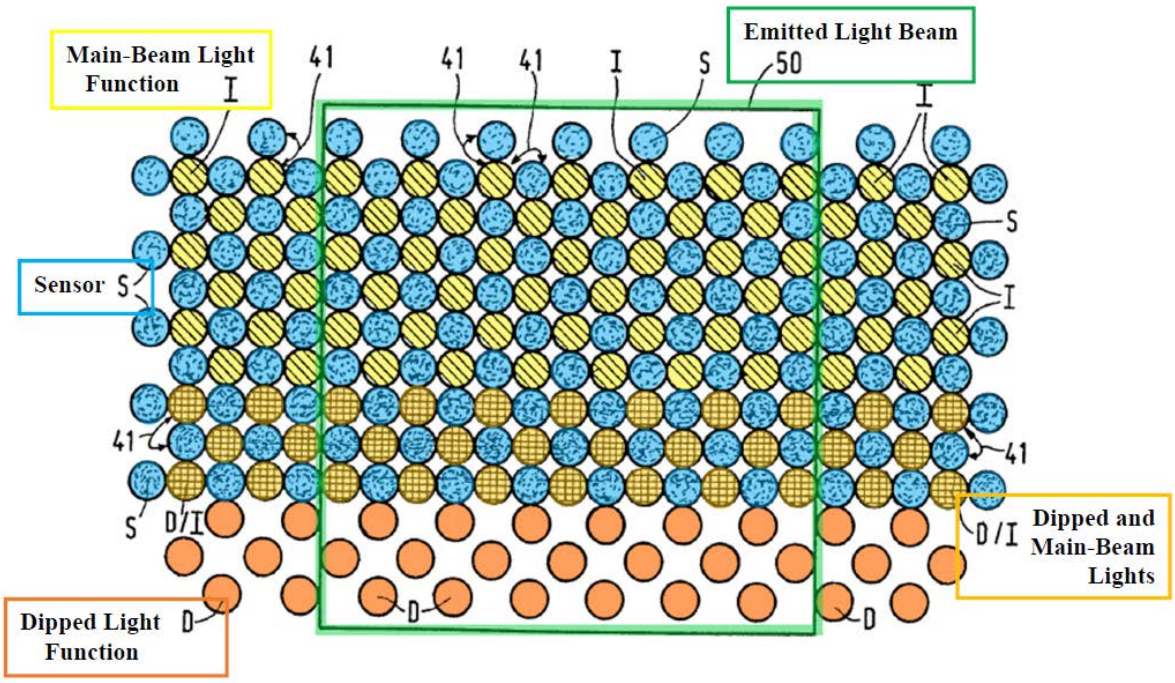


EX1010, FIG. 14 (annotated).

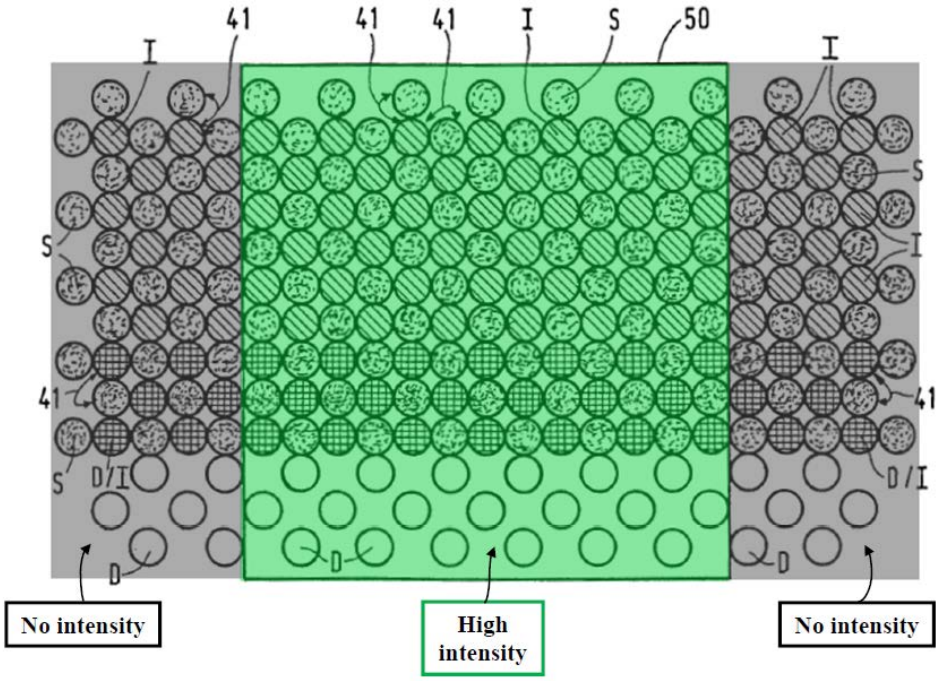


EX1010, FIG. 14 (annotated).

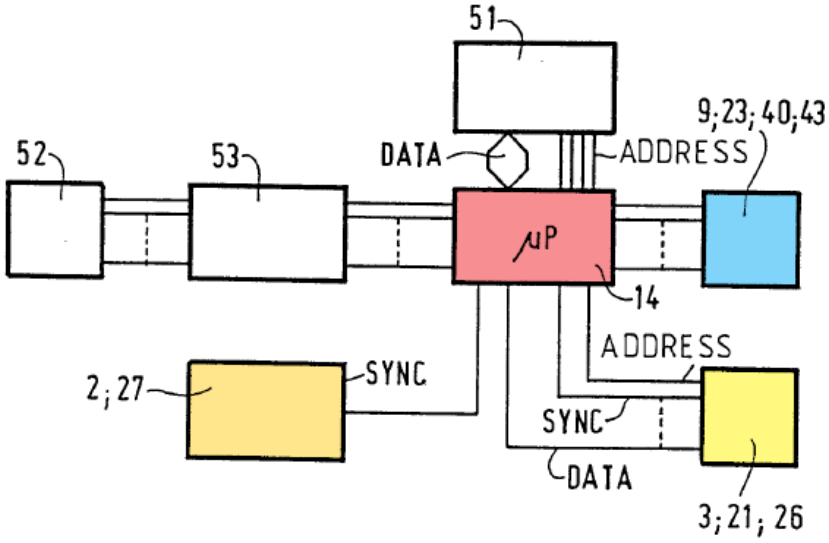


EX1010, FIG. 15 (annotated).

### C. Additional Elements of Claim 37

[37.P]-[37.7] and [37.10] are addressed above in Section XI.B. EX1003, ¶644.

**1. [37.8]**

*See supra* Sections XI/XI.A; EX1003, ¶¶537-563, 645-646. The first subsection (outside emitted light beam 50) is illuminated "below a predefined threshold" because it receives "*no light* at all or light having a *low intensity*," which is *below* the dipped beam threshold. *Supra* Section XI; EX1003, ¶647; EX1010, 9:18-26, FIG. 14.

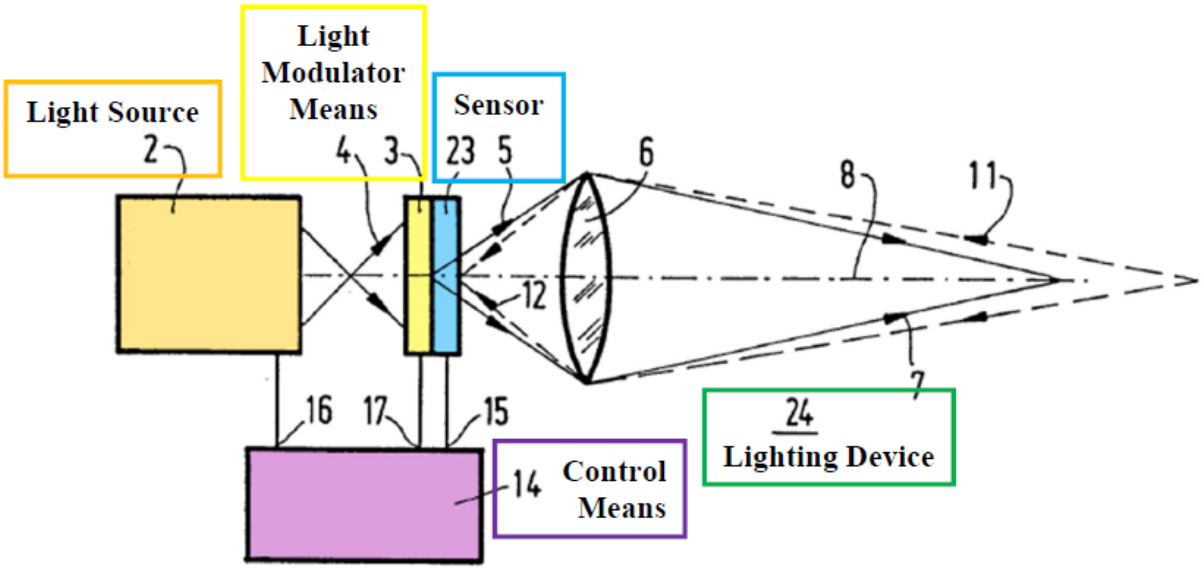


EX1010, FIG. 3 (annotated).

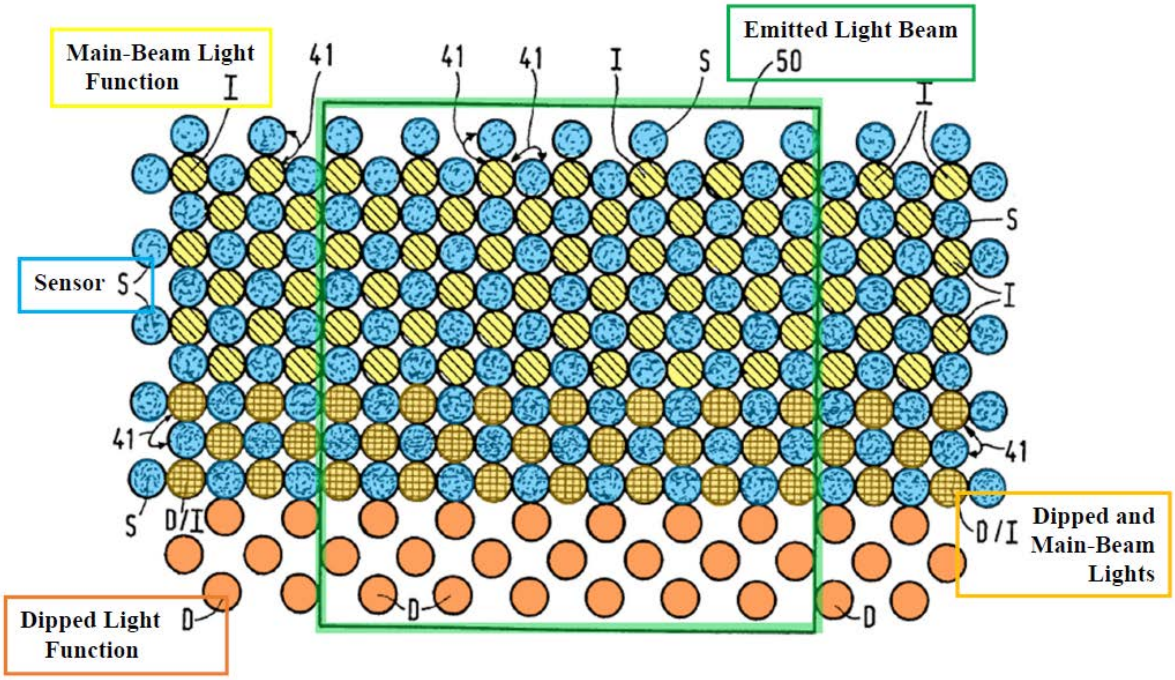


EX1010, FIG. 14 (annotated).

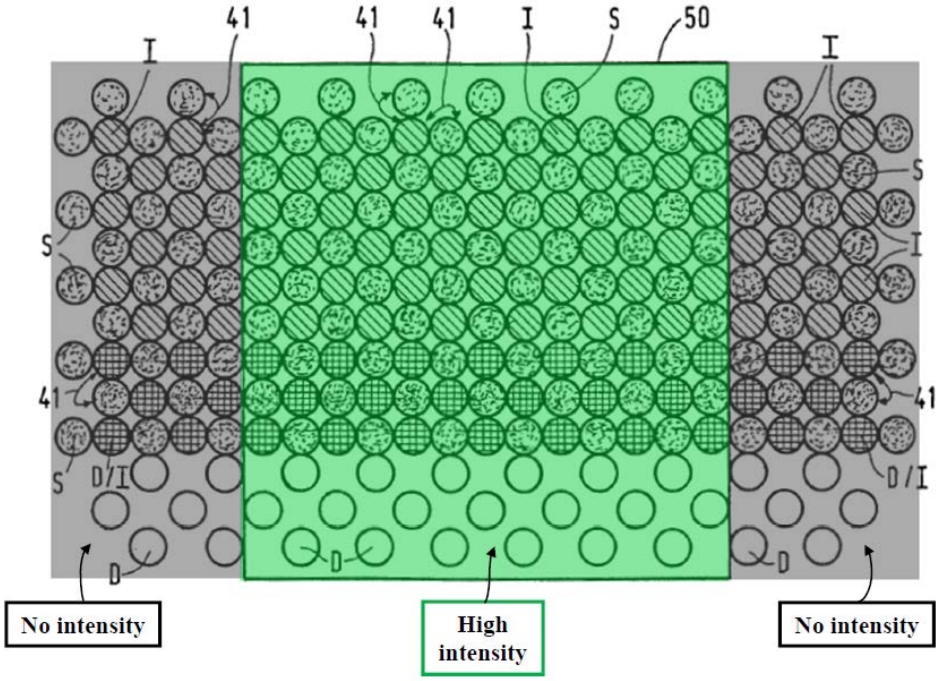


EX1010, FIG. 14 (annotated).

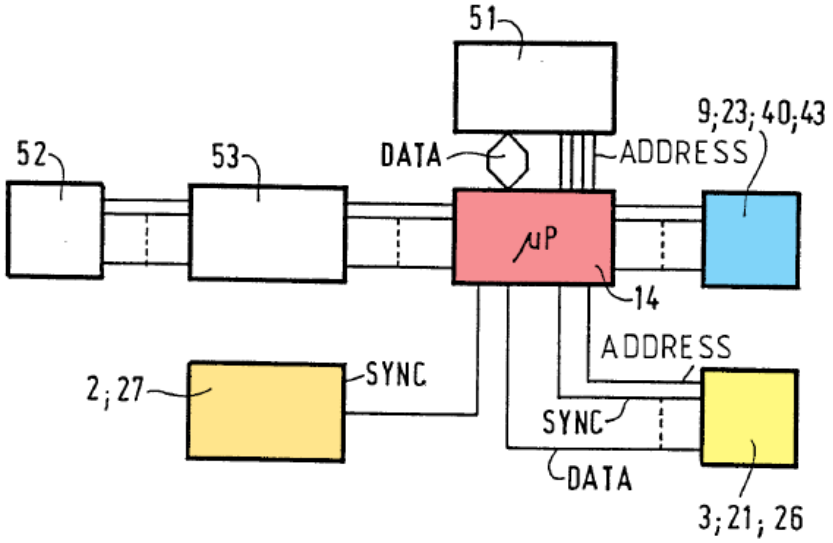


EX1010, FIG. 15 (annotated).

Thus, Karlsson's system would illuminate the first subsection "below a predefined threshold." *Supra* Section XI.A; EX1003, ¶¶647-651.

**2. [37.9]**

*See supra* Sections XI/XI.A; EX1003, ¶¶537-563, 652-653. The second subsections (emitted light beam 50) are illuminated "above the predefined threshold" because the illuminance in those areas is "*higher* than that of conventional *dipped* headlights"—*above* a dipped beam threshold. *Supra* Section XI; EX1003, ¶653; EX1010, Abstract, FIG. 14.

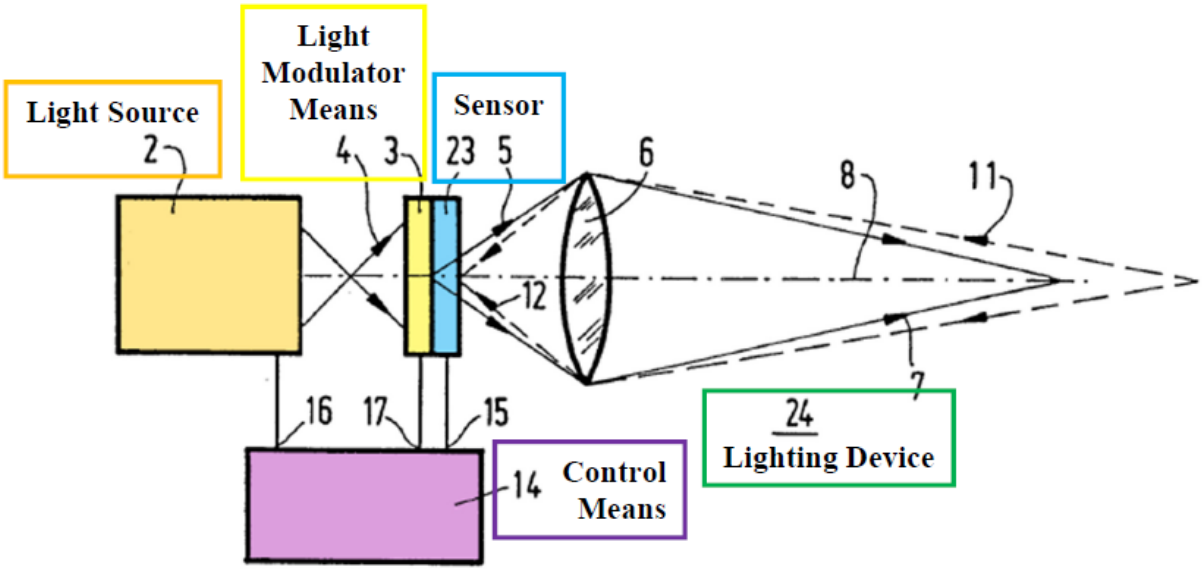


EX1010, FIG. 3 (annotated).

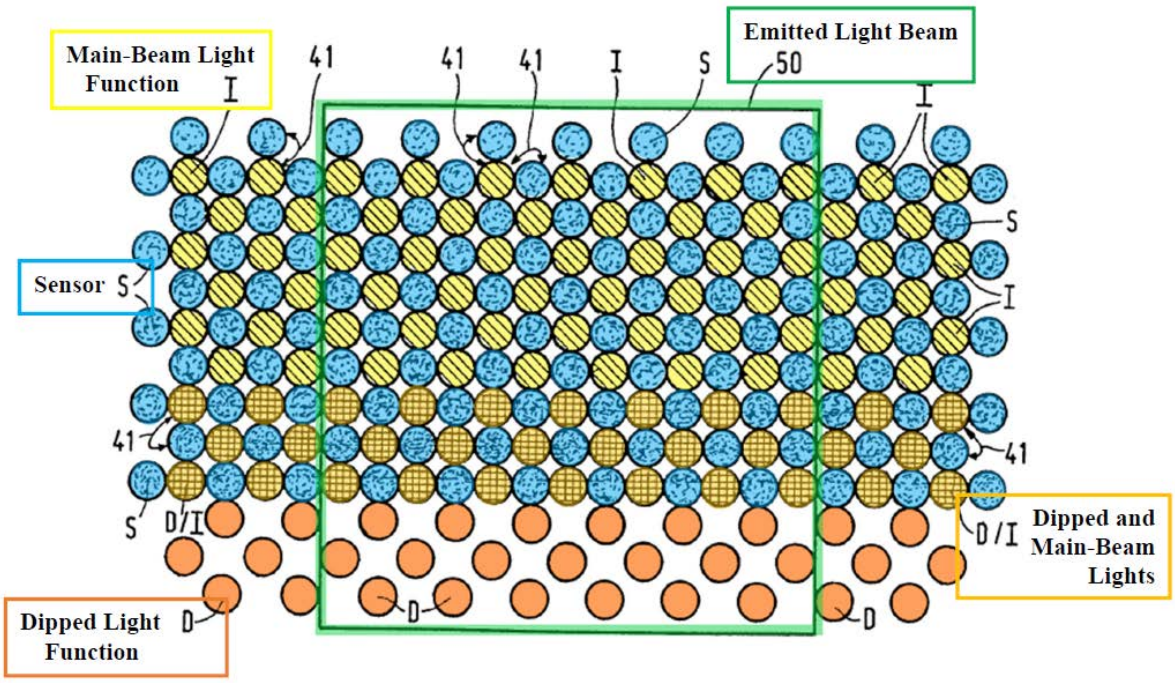


EX1010, FIG. 14 (annotated).

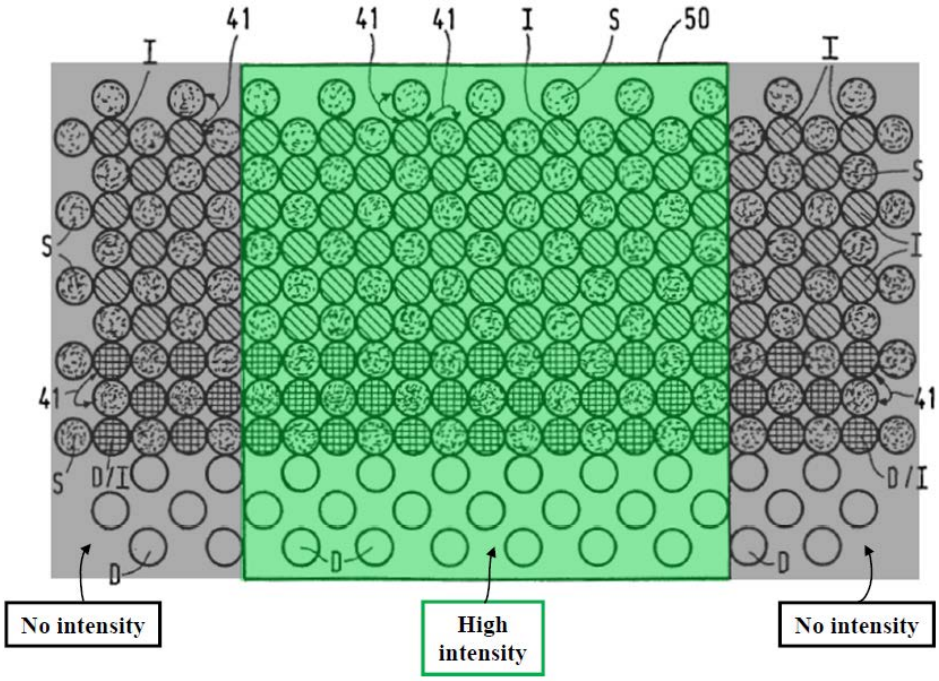


EX1010, FIG. 14 (annotated).

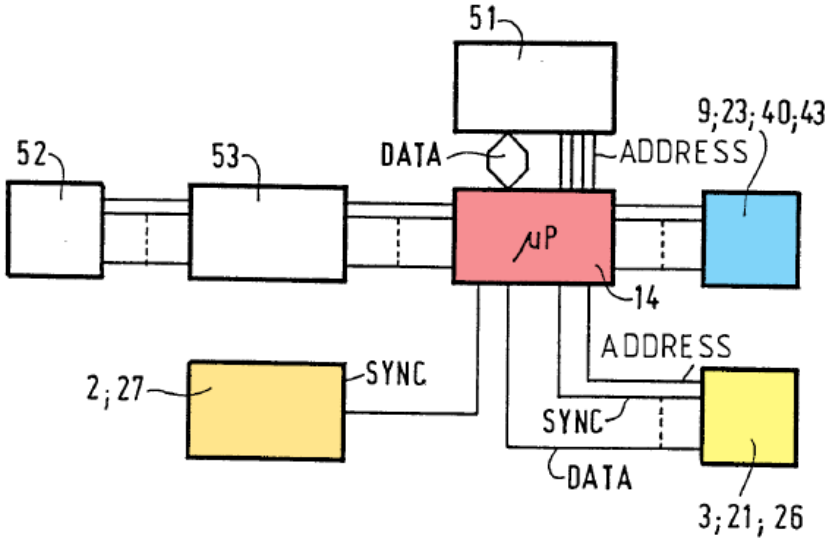


EX1010, FIG. 15 (annotated).

Thus, Karlsson's system would illuminate the second subsection (non-shaded area) "above the predefined threshold." *Supra* Section XI.A; EX1003, ¶¶653-657.

### D. Claims 2/42[11]

#### 1. [2.1]/[42.1]

Karlsson's "light source 2…light modulator means 3…[are] in a *housing* 18…[and] control means 14 [are] arranged therein." EX1010, 8:31-35, FIG. 1, 4:25-31, 14:1-15, 11:25-28, 19:29-33, FIGS. 3, 6, 14; EX1003, ¶¶658-660. Karlsson's lighting device provides light aimed in a forward travel direction. EX1010, 20:16-32, FIGS. 1, 3, 16, Abstract, 9:18-22, 8:31-35, FIGS. 1, 16; EX1003, ¶¶660-662.

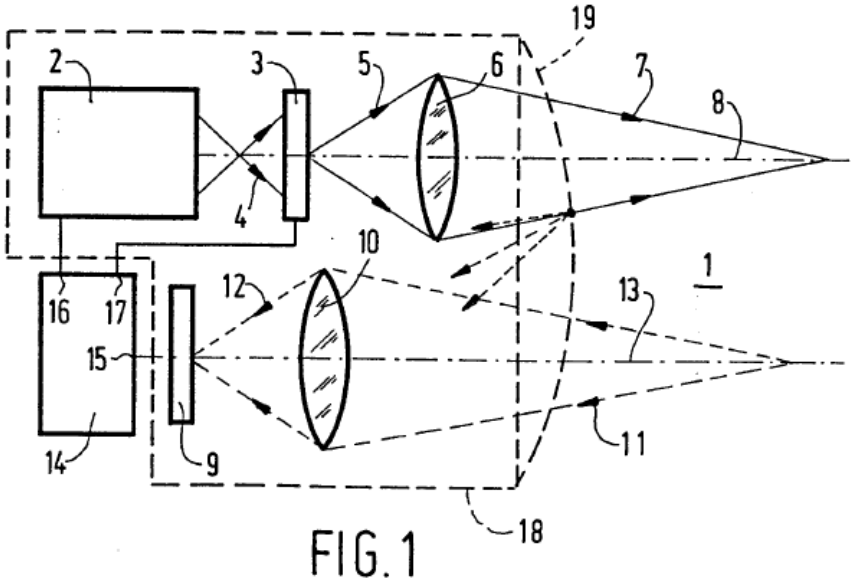


EX1010, FIG. 1.

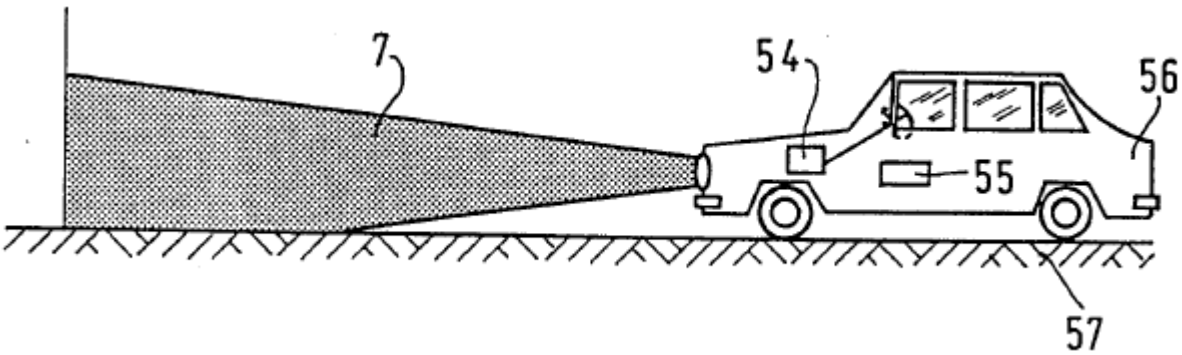


[11] Claims 2 and 42 are patentably indistinct. EX1003, ¶658; *see* Appendix C.

EX1010, FIG. 16.

**2. [2.2]/[42.2]**

Karlsson's system includes a light source power/energy supply. EX1010, 8:27-9:1, FIGS. 1, 16, 10:18-25, 13:5-8, 18:35-19:3; EX1003, ¶¶663-665. A POSA would have understood Karlsson's light source's (LEDs) intensity (brightness) of a lamp/LED changes based on the power (current) applied. EX1010, 8:27-9:1, 10:18-25, 14:1-15, FIG. 1, 18:2-7, 20:16-32, FIGS. 1, 3, 16, Abstract, 9:18-22; EX1003, ¶¶666-667.

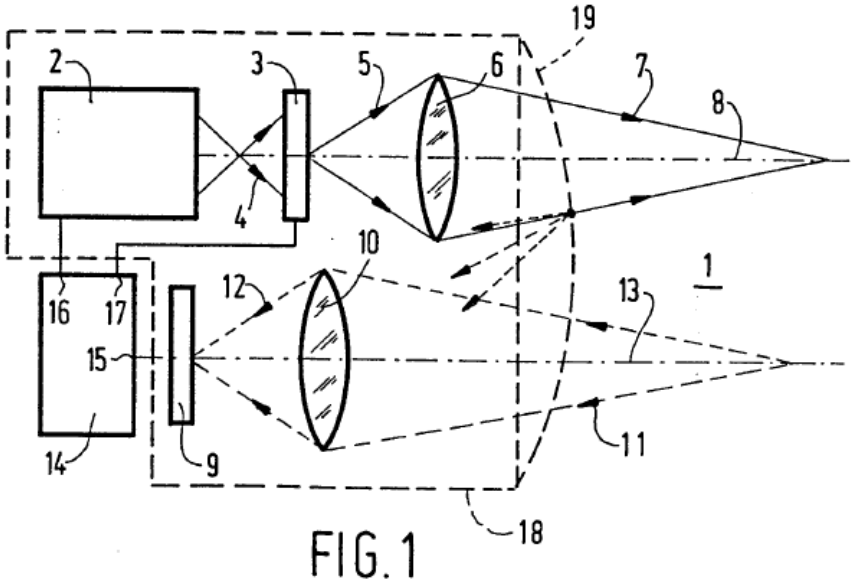


EX1010, FIG. 1.

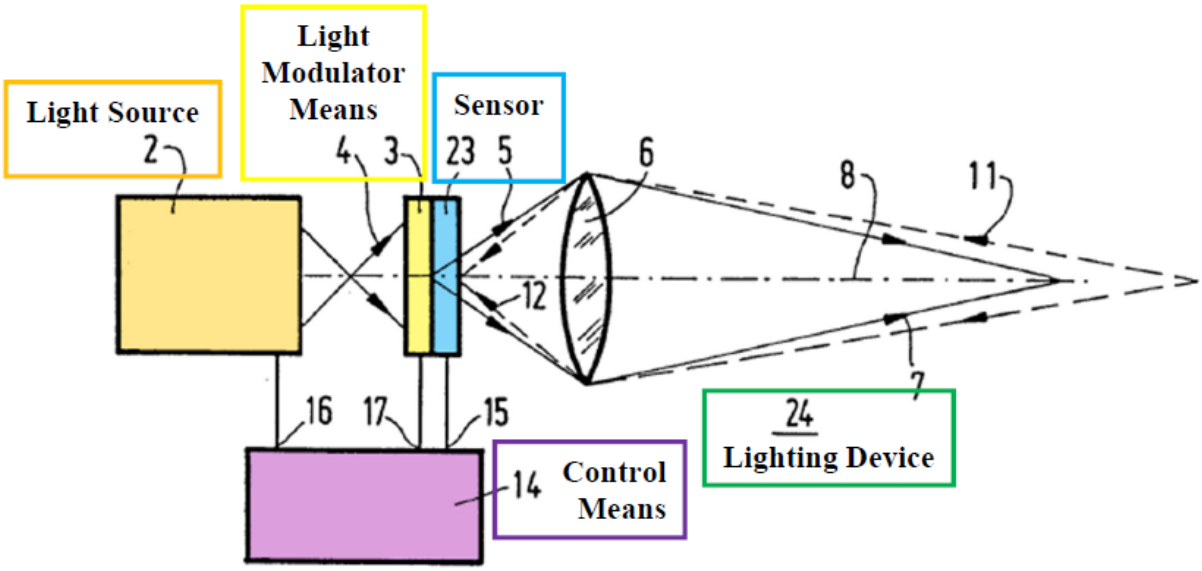


EX1010, FIG. 3 (annotated).

**3. [2.3]/[42.3]**

Karlsson describes "light 4 from the light source 2 incidences the *light modulator means 3*." EX1010, 8:27-9:1, 8:10-18, FIGS. 1, 16, 10:18-25, 4:25-31, 14:1-15, FIGS. 3, 6, 11:25-28, 19:29-33, FIG. 14; EX1003, ¶¶668-669. Karlsson's light modulator means 3 is a "light modifying element[]." EX1010, 8:10-18, 4:25-31, 14:1-15; EX1003, ¶670. Karlsson's lens 6 is a "light modifying element[]." EX1010, 8:15-18, 8:31-35, 10:18-25, 11:2-15, FIGS. 1, 3; EX1003, ¶¶671-672.

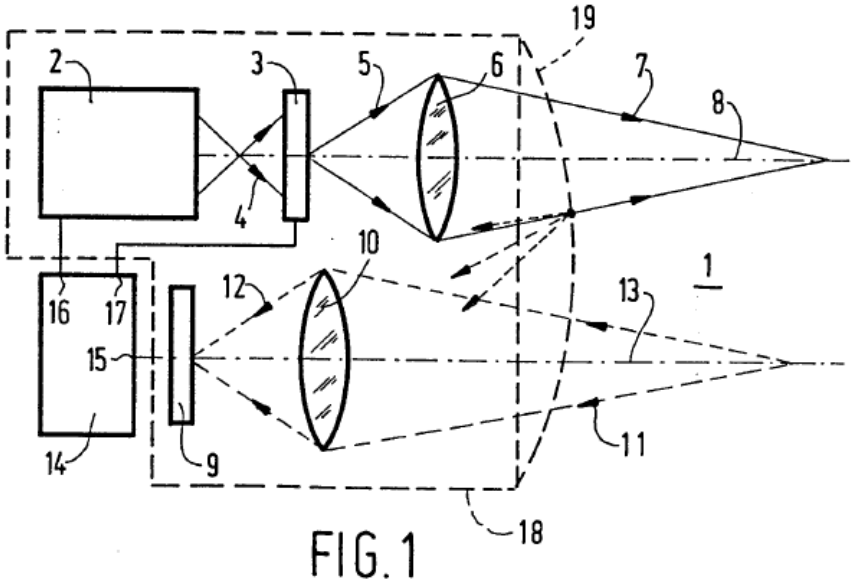


EX1010, FIG. 1.

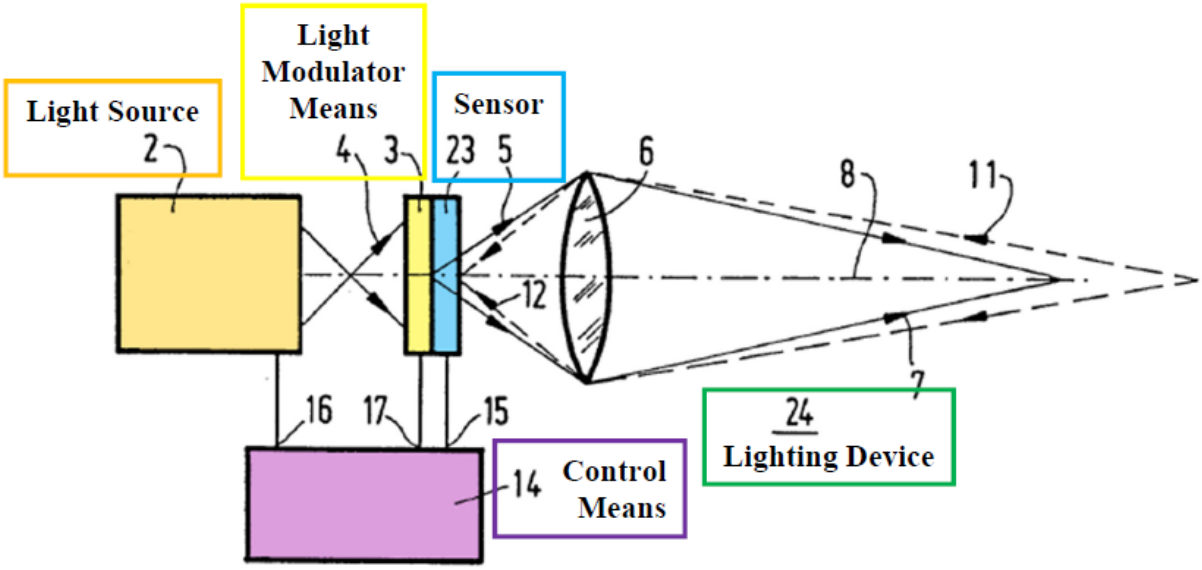


EX1010, FIG. 3 (annotated).

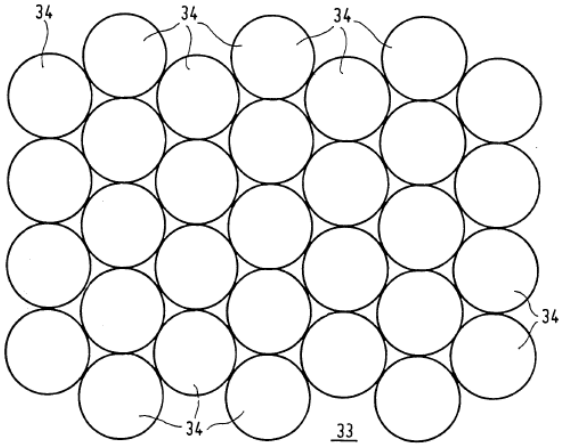


FIG. 6

EX1010, FIG. 6.

**4. [2.4]/[42.4]**

Karlsson's "control means 14…control[s] the *lighting means 2, 3*…[so] light beam 7…[has] a desired *pattern* and a desired *intensity*." EX1010, 8:27-9:1, 9:9-17, FIGS. 1, 3, 6, 10:18-25, 4:25-31, 14:1-15, 11:25-28, 19:29-33, FIG. 14; EX1003, ¶¶673-674. Thus, Karlsson provides "an emitted light-cluster light characteristic," for example, "direction," "intensity," or "spatial light distribution." EX1010, 8:10-18, 4:25-31, 14:1-15, FIG. 14; EX1003, ¶¶675-677.

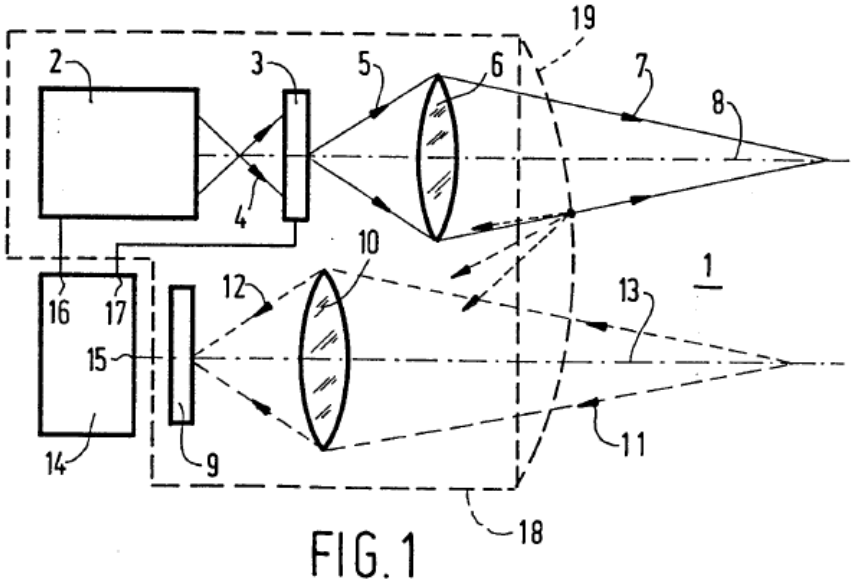


EX1010, FIG. 1.

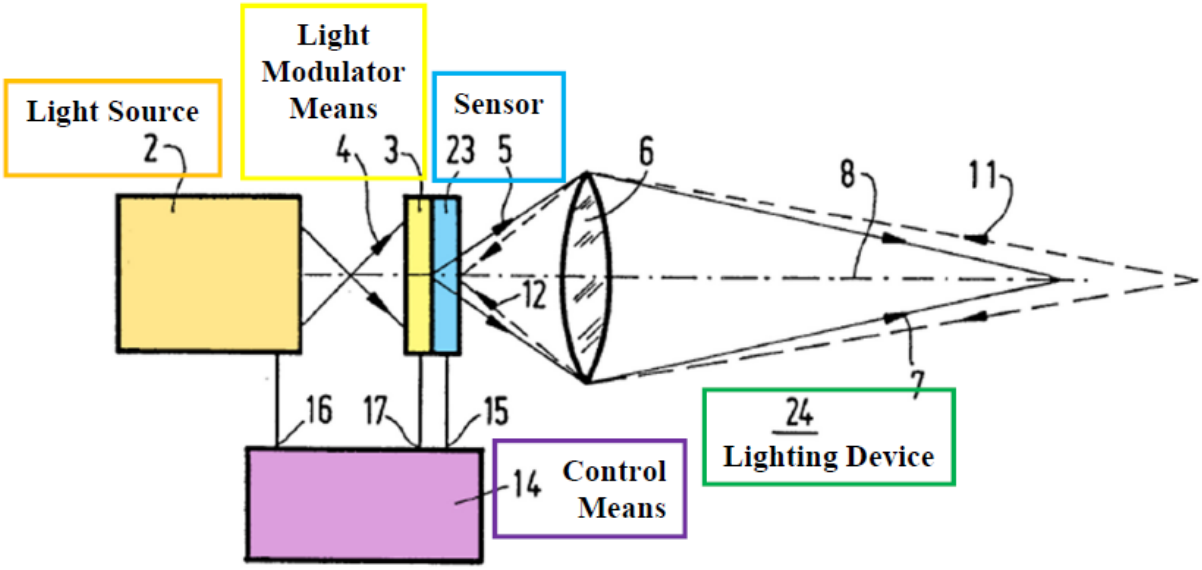


EX1010, FIG. 3 (annotated).

### E. Claims 3/43[12]

Karlsson's *spotlight beams 34* may be "made up of…*light modulators*." EX1010, 4:25-5:15, 14:1-15, FIGS. 3, 6, 11:25-28, 19:29-33, FIG. 14; EX1003,

[12] Claims 3 and 43 are patentably indistinct. EX1003, ¶678.

¶¶678-679. Thus, Karlsson's light modulator 3 is "a variable light modifier" with "reflectors" controlling the "light-cluster light characteristic," for example, "direction," "intensity," or "spatial light distribution." EX1010, 4:25-5:15, 14:1-15, FIGS. 3, 6; EX1003, ¶680.

Thus, Karlsson's light modulator 3 (micro mirrors) includes "variable light modifier control circuitry" to adjust the direction/intensity of each modulator (mirror) in the array. EX1010, 4:25-5:15, 8:25-31, 9:3-26, 14:1-15, FIGS. 3, 14-15; EX1003, ¶681. Karlsson's lens 6 is "a static light modifier" with "refractors." EX1010, 8:15-18, 8:31-35, 10:18-25, 11:2-15, FIGS. 1, 3; EX1003, ¶¶682-683.

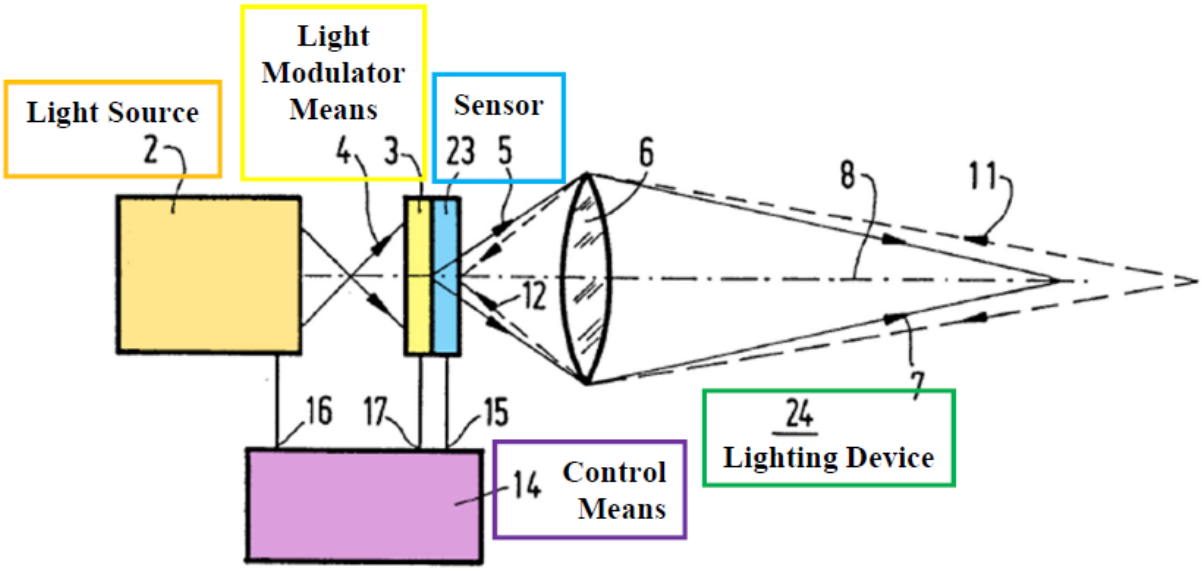


EX1010, FIG. 3 (annotated).

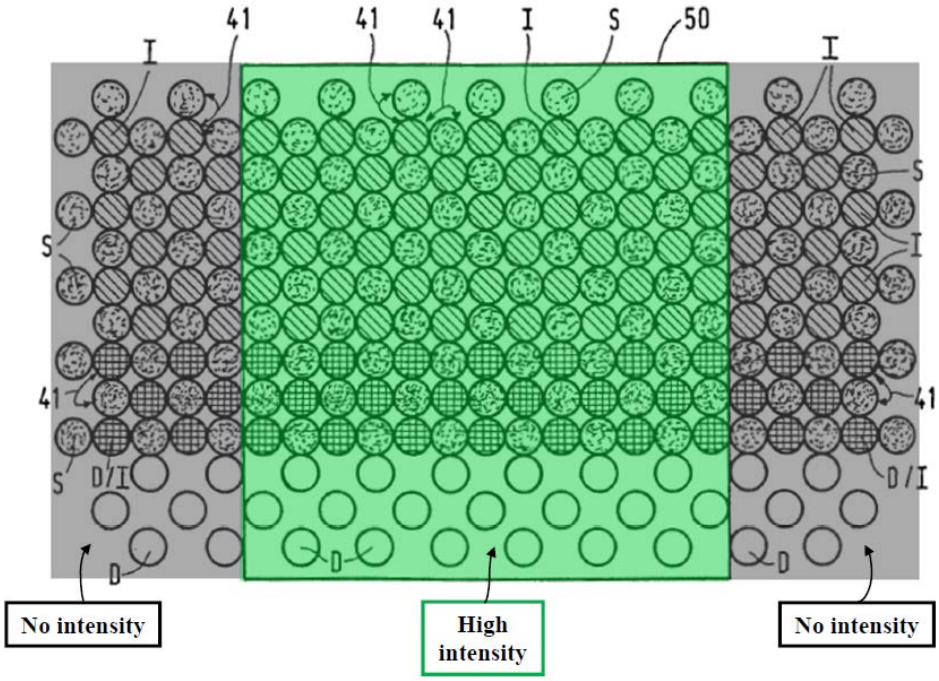


EX1010, FIG. 14 (annotated).

### F. Claims 4/44[13]

Karlsson's "*light modulator means*…[includes] '*Micro Mirrors*'." EX1010, 4:25-5:15, FIGS. 3, 6, 11:25-28, 14:1-15, 19:29-33; EX1003, ¶¶684-686. Thus, Karlsson's light modulator 3 includes "optical devices." EX1010, 5:7-15; EX1003, ¶¶685-686. Karlsson's lenses 6, 10 include "lenses." EX1010, 8:15-18, 8:31-35, 10:18-25, 11:2-15, FIGS. 1, 3; EX1003, ¶¶687-688.

[13] Claims 4 and 44 are identical. EX1003, ¶684.

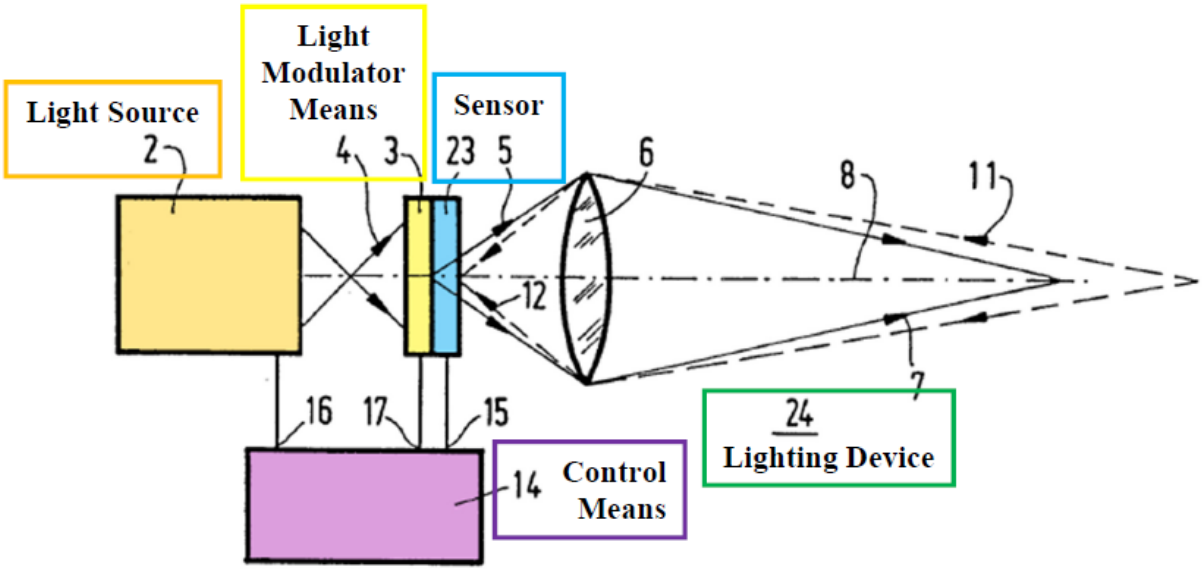


EX1010, FIG. 3 (annotated).

### G. Claims 5/45[14]

Karlsson's light sources may also include "a plurality of *light-emitting diodes*," that are controlled either individually/in groups. EX1010, 4:25-5:15, 11:25-28, 14:1-5, 19:29-33, 18:2-7, 20:16-32, FIGS. 1, 3, 6, 14; EX1003, ¶¶689-692.

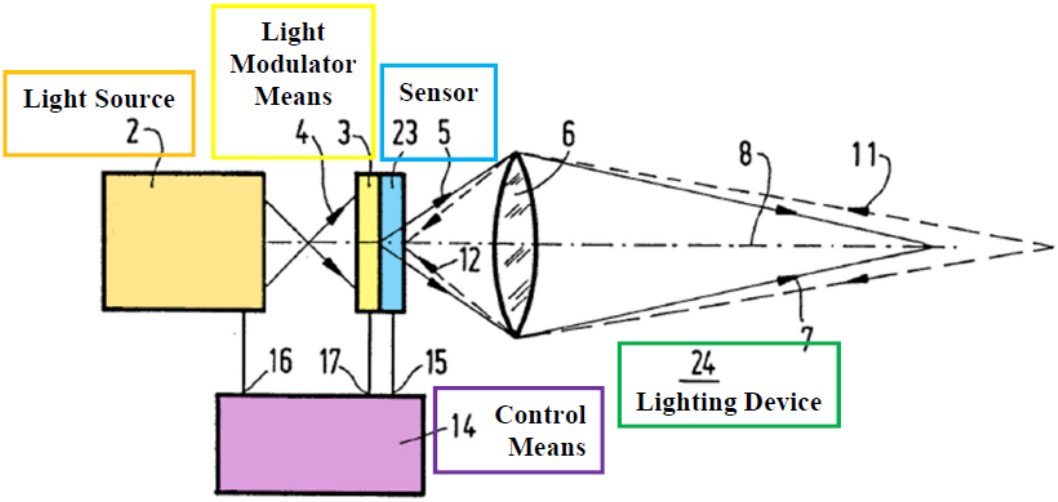


EX1010, FIG. 3 (annotated).

[14] Claims 5 and 45 are patentably indistinct. EX1003, ¶689.

Harbers's opto-electronic elements provide differently colored beam segments for different distributions. EX1011, 5:14-26, 6:1-7, 6:27-7:19, FIGS. 1B-2, 4A, 9:1-10:5 ("*different spectral characteristic*"), 10:6-14, 7:27-32, 13:5-7; EX1003, ¶693.

Thus, Karlsson-Harbers's LEDs each have "a spectral power distribution characteristic" (color) and that Karlsson-Harbers's controller provides different colors to different subsections. EX1011, 5:14-26, 6:1-7, 6:27-7:19, 9:28-10:5, FIGS. 1B-2; EX1010, 4:25-5:15, 11:25-28, 14:1-5, FIGS. 1, 3, 6, 14; EX1003, ¶694.

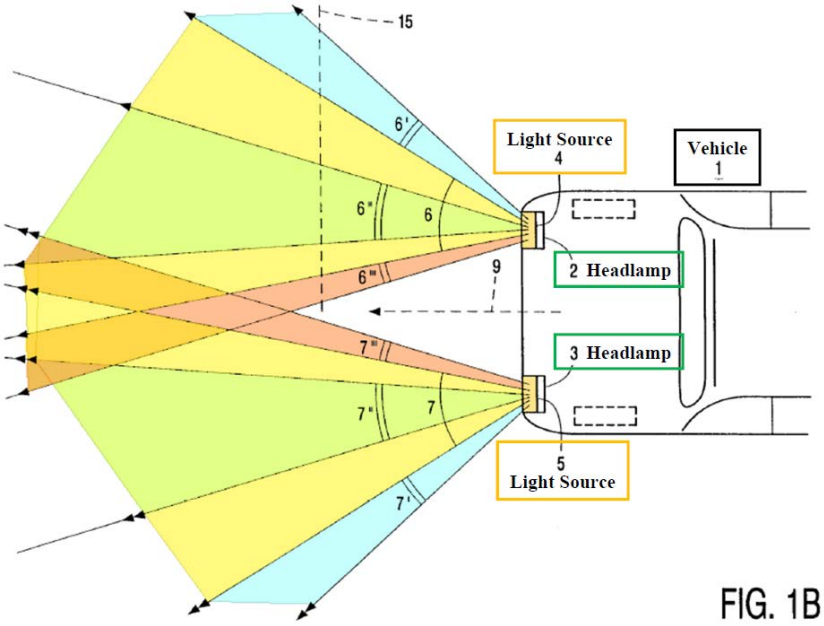


EX1011, FIG. 1B (annotated).

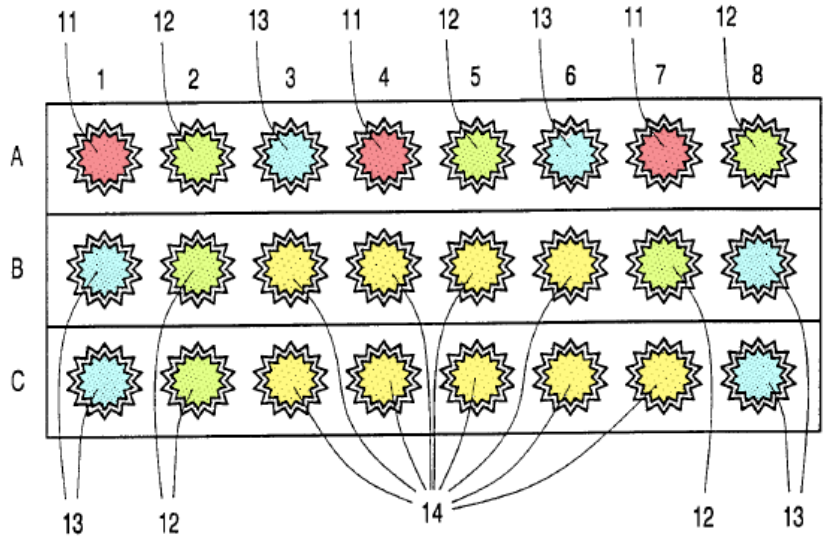


EX1011, FIG. 2 (annotated).

*Supra* Section XI.A; EX1003, ¶¶549-563, 695-706.

Thus, Karlsson-Harbers renders obvious claim 5. EX1003, ¶706.

**H. Claims 7/8[15]/47[16]/48[17]**

Karlsson's controller is "a logical controller." *Supra* Section XI.B.8; EX1003, ¶¶622-626, 707-710. Karlsson's "light-sensitive sensor" is a video camera sensor, that "determin[es] the *direction* and the *intensity* of the detected light," for example, "light from *oncoming traffic*." EX1010, 2:2-4, Abstract, 12:19-24, FIGS. 3, 14, 3:17-20, 5:16-32, 3:27-31; EX1003, ¶711. Thus, Karlsson determines a vehicle position based on imaged incident light, which includes an oncoming/preceding

[15] Claims 7-8 are patentably indistinct. EX1003, ¶707.

[16] Claims 7 and 47 are patentably indistinct. EX1003, ¶708.

[17] Claims 8 and 48 are patentably indistinct. EX1003, ¶709.

vehicle. EX1010, 2:2-4, Abstract, 8:19-24, 9:9-26, 11:18-28, 12:19-24, 15:17-22, 17:21-31, FIGS. 3, 14; EX1003, ¶712.

Karlsson's "*incident light 11* on the *light-sensitive sensor 9*…is *processed* into an *electric control signal* on input 15 of the *control means 14*" and "*memory 51*…may be used for *storing* and recording the *various adjustments*." EX1010, 9:9-17, FIGS. 3, 14-15, 20:12-32, 20:1-3, 21:36-22:4; EX1003, ¶¶713-714. Karlsson's processor processes incident light 11, indicates a vehicle (oncoming/preceding), and uses algorithms to determine an area to be reduced within a first subsection of the field-of-view to "decrease at least one vision-disturbing characteristic," for example, glare or blinding. EX1010, 9:9-26, 2:7-9, 5:16-32, 14:26-30, 20:12-32, 21:36-22:4, FIGS. 3, 14-15; EX1003, ¶¶715-716.

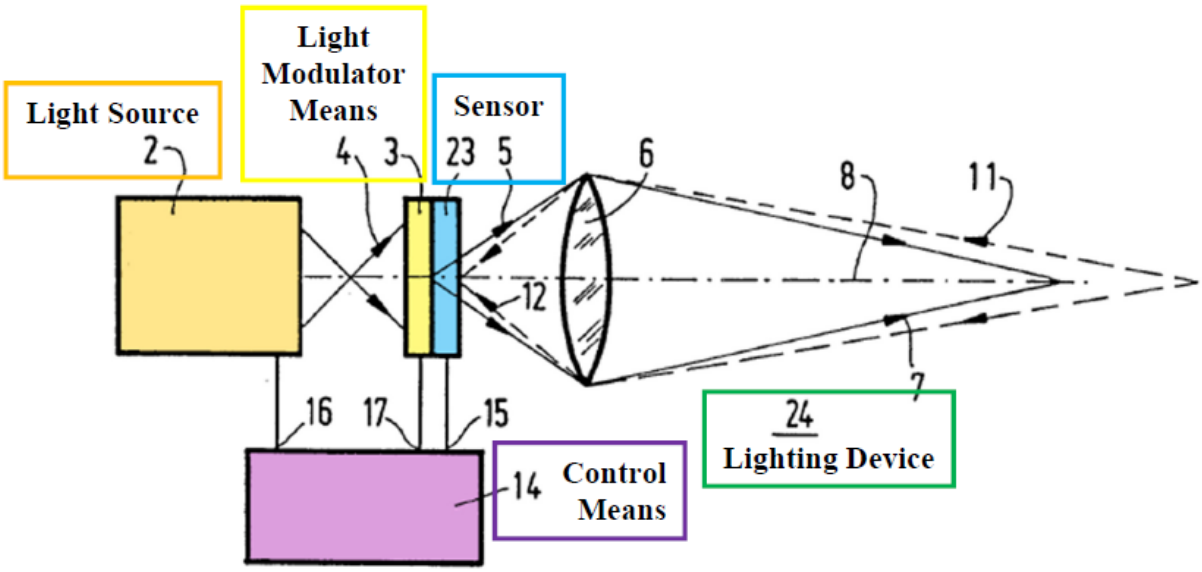


EX1010, FIG. 3 (annotated).

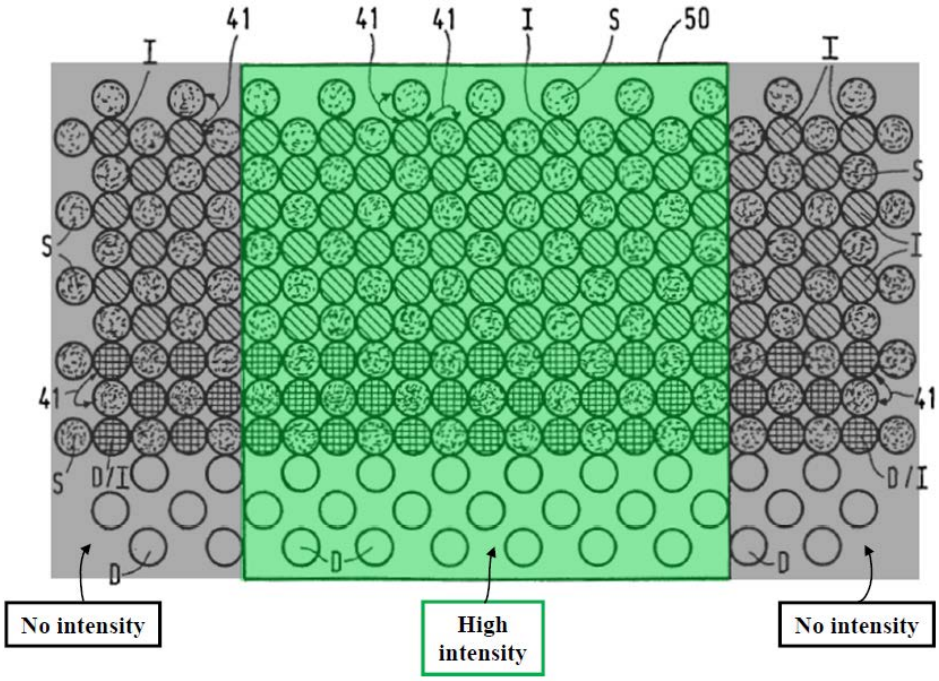


EX1010, FIG. 14 (annotated).

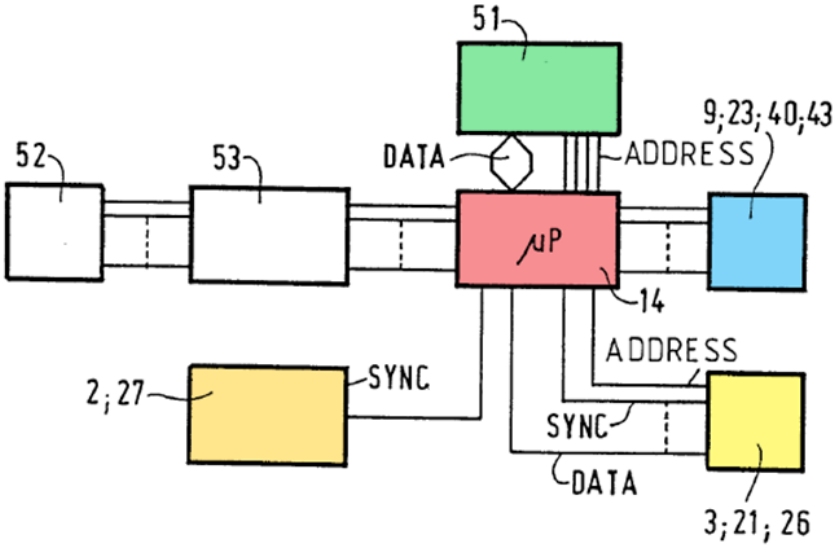


EX1010, FIG. 15 (annotated).

## I. Claim 10

Karlsson's sensor detects "light from *oncoming traffic*." EX1010, 2:2-4, Abstract, 12:19-24, FIGS. 3, 14, 3:17-31, 5:16-32; EX1003, ¶¶717-718.

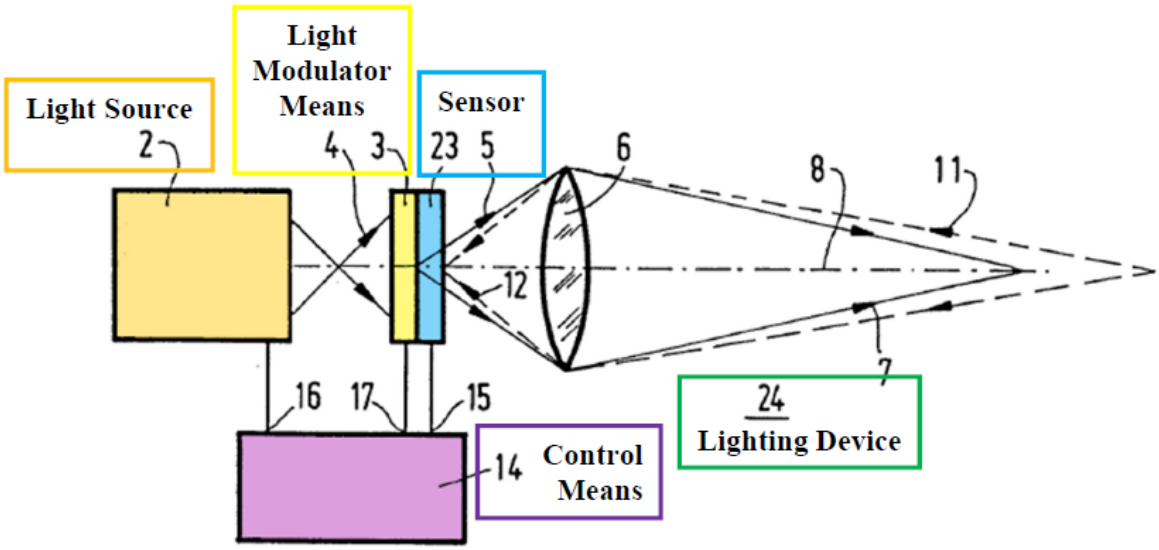


EX1010, FIG. 3 (annotated).

### J. Claims 11/50[18]

Karlsson's controller is "a logical controller." *Supra* Section XI.B.8; EX1003, ¶¶622-626, 719-720. Karlsson identifies "*oncoming traffic*" as it "determin[es] the *direction* and the *intensity* of the detected light 11." EX1010, 2:2-4, Abstract, 12:19-24, FIGS. 3, 14, 3:17-31, 5:16-32; EX1003, ¶721. Karlsson controls its light to emit "a *desired pattern* and a *desired intensity*," and "*memory 51*…may be used for *storing* and recording the *various adjustments*." EX1010, 9:9-17, 21:36-22:4, FIGS. 3, 14-15, 20:1-32; EX1003, ¶722. Thus, Karlsson's processor includes "a computer vis[i]on processing unit" because Karlsson's processor uses incident light data and "one or more…algorithms" to modify illumination to an identified vehicle. EX1010,

[18] Claims 11 and 50 are patentably indistinct. EX1003, ¶719.

2:4-9, 9:9-17, 12:19-24, 20:12-15, FIGS. 14-15; EX1003, ¶¶723-726; EX1001, 63:37-45 ("computer vision methodologies *known in the art*").

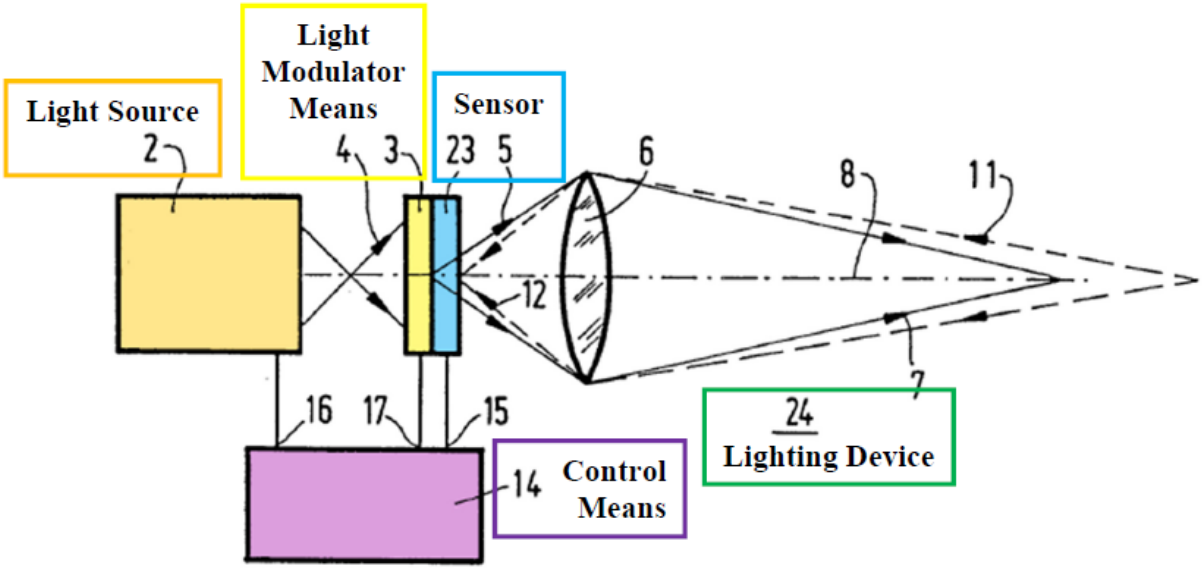


EX1010, FIG. 3 (annotated).

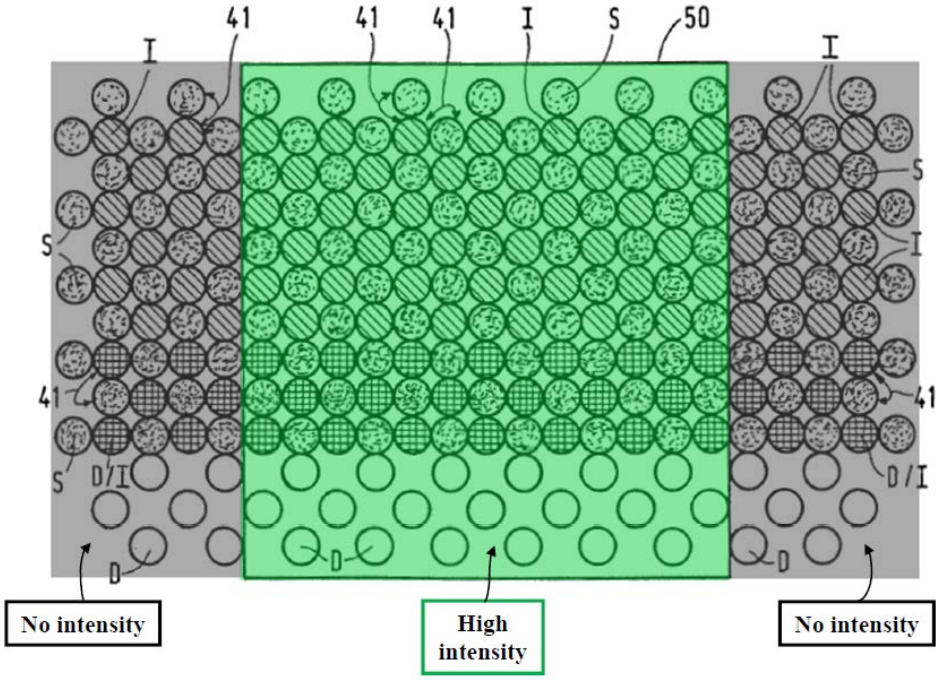


EX1010, FIG. 14 (annotated).

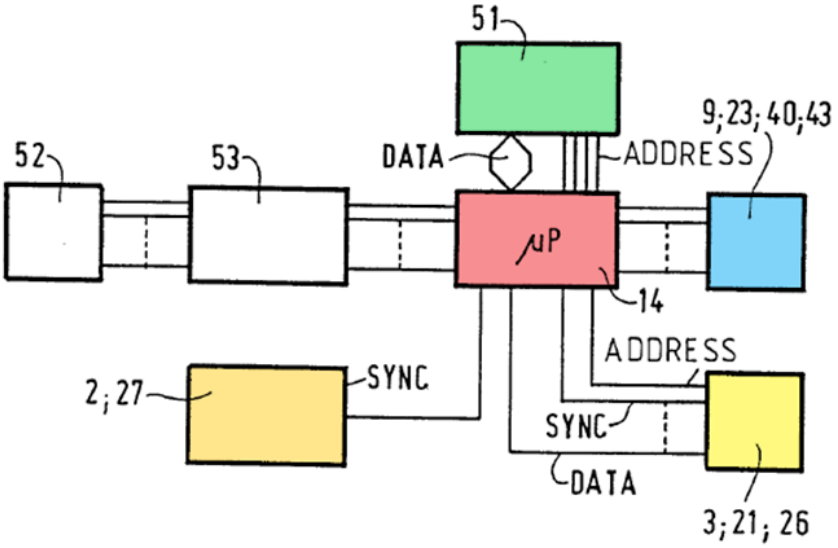


EX1010, FIG. 15 (annotated).

**K. Claim 12**

*See supra* Section XI.B.9; EX1003, ¶¶627-632, 727. Karlsson "permit[s] a light intensity…*higher than that of conventional dipped headlights*" where appropriate. EX1010, 9:9-26, Abstract, FIGS. 3, 14-15, 19:23-33, 2:7-9, 14:26-30, 5:16-32; EX1003, ¶728. Karlsson also provides control such that "*no light at all* or *light having a low intensity* is emitted [where glare may occur]…[thus] *glaring or blinding*…is effectively *prevented*." EX1010, 9:9-26, FIGS. 3, 14-15, 19:23-27, 2:7-9, 5:16-32, 14:26-30, 20:12-32, 21:36-22:4; EX1003, ¶729. Simply, Karlsson's processor processes the data, indicates a vehicle, and reduces illumination within a first subsection to "mitigat[e] glaring," and creates illumination in a second subsection to provide "higher visibility." EX1010, 2:4-9, 9:9-17, 12:19-24, 20:12-15, FIGS. 14-15; EX1003, ¶¶730-731.

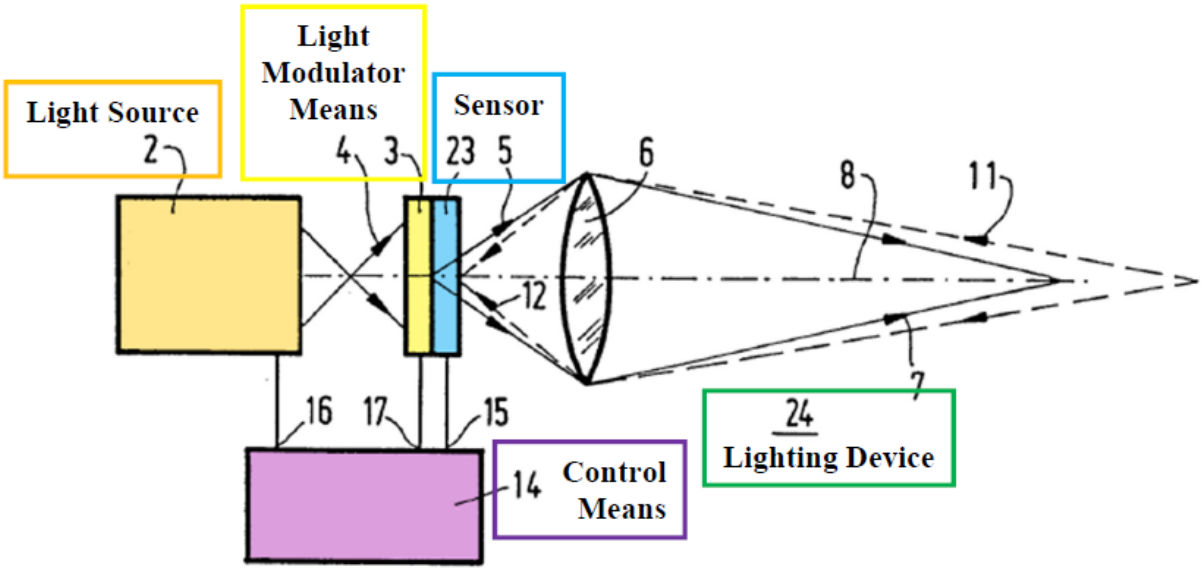


EX1010, FIG. 3 (annotated).

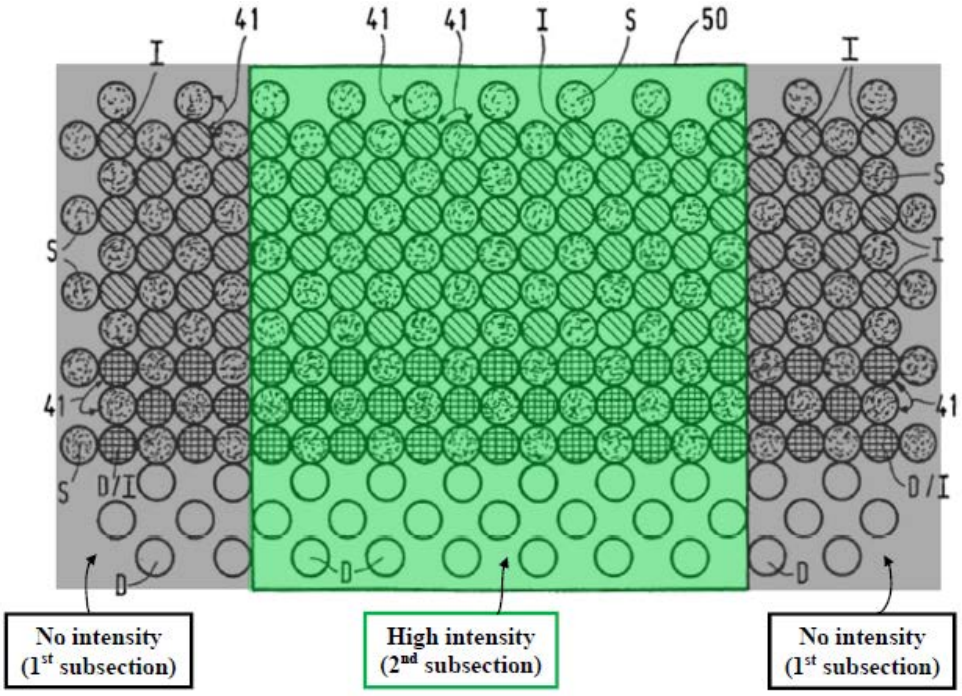


EX1010, FIG. 14 (annotated).

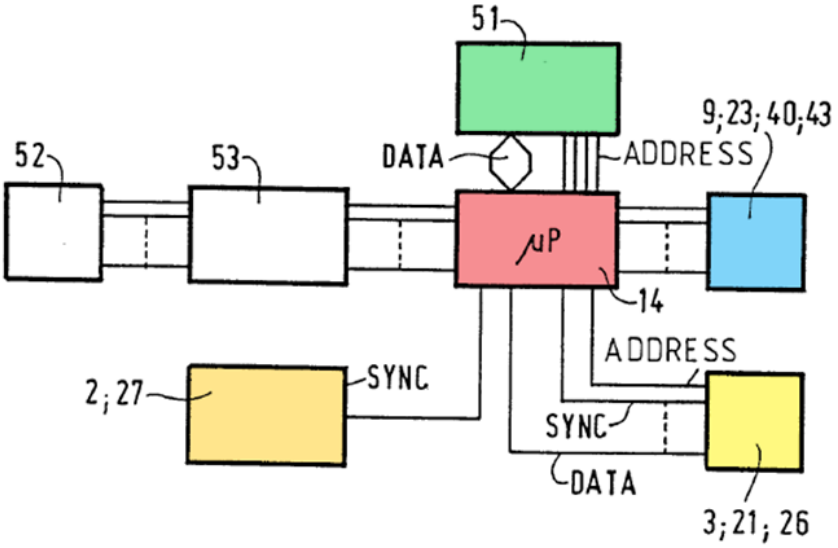


EX1010, FIG. 15 (annotated).

**L. Claim 13**

Karlsson's illumination in non-shaded areas is "*higher* than that of *conventional dipped headlights*," in the second subsection. EX1010, 9:9-26, Abstract, FIGS. 3, 14-15, 1:27-30 ("*high beams* or *main-beams*"), 2:7-9 ("*part of the light beam*…is…suppressed, whilst *retaining an optimum lighting*"), 19:23-33, 14:26-30, 5:16-32; EX1003, ¶¶732-733.

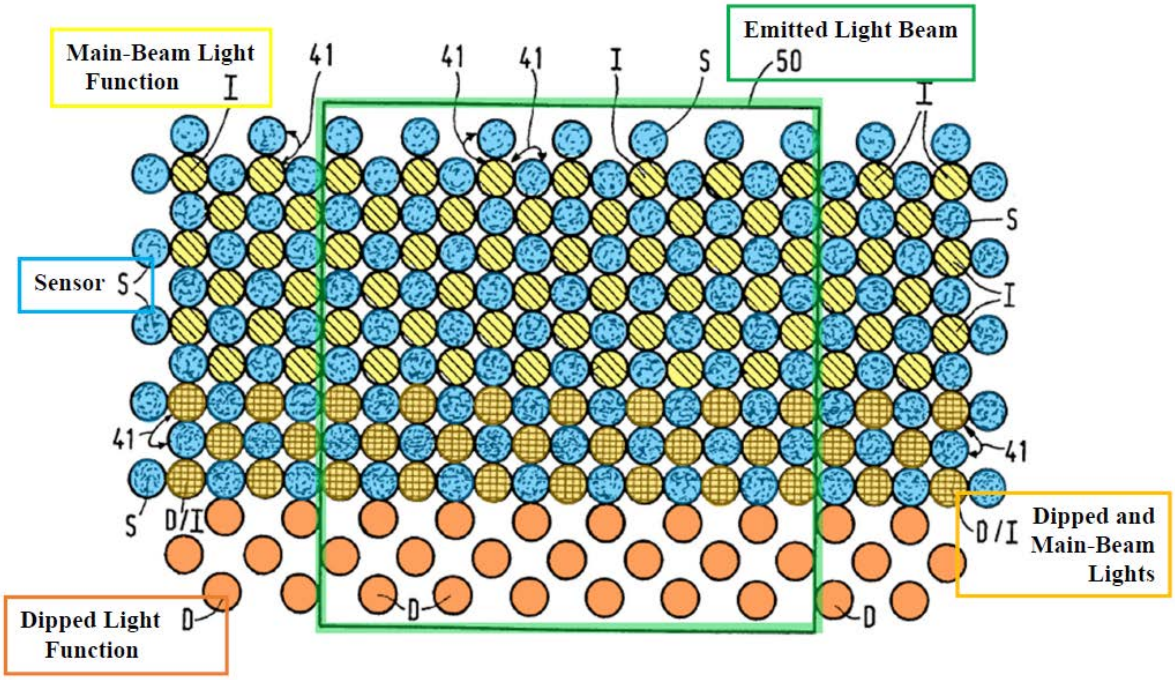


EX1010, FIG. 14 (annotated).

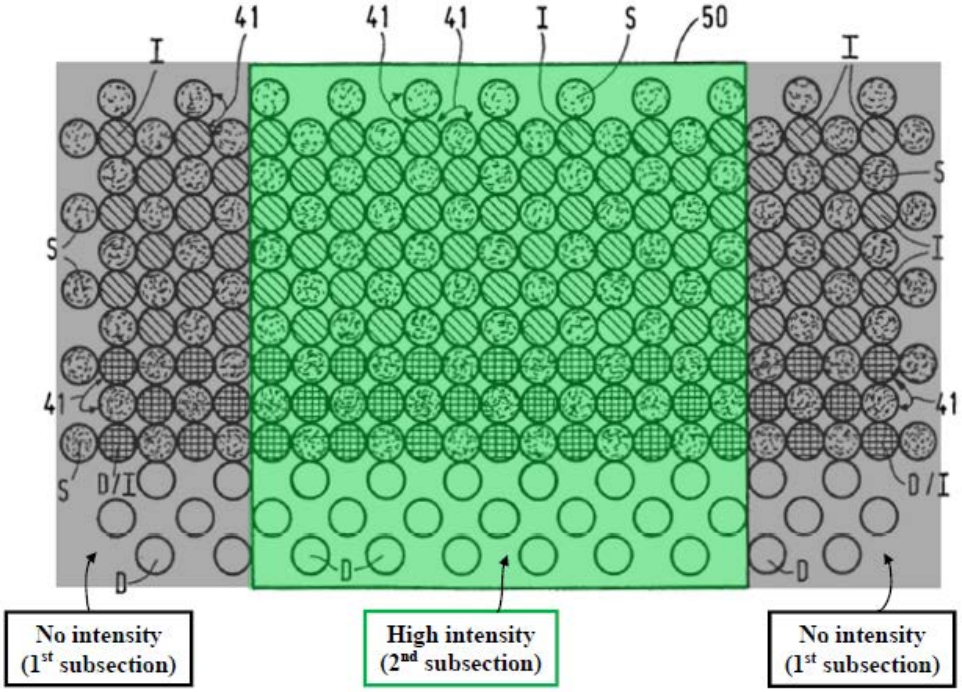


EX1010, FIG. 14 (annotated).

### M. Claim 14/53[19]

Karlsson's *sensor 9, 23* is a "video camera[]." EX1010, 12:19-24, FIGS. 3, 14, 21:30-35, 19:18-20:5, 2:2-4, Abstract, 5:16-32; EX1003, ¶¶734-737.

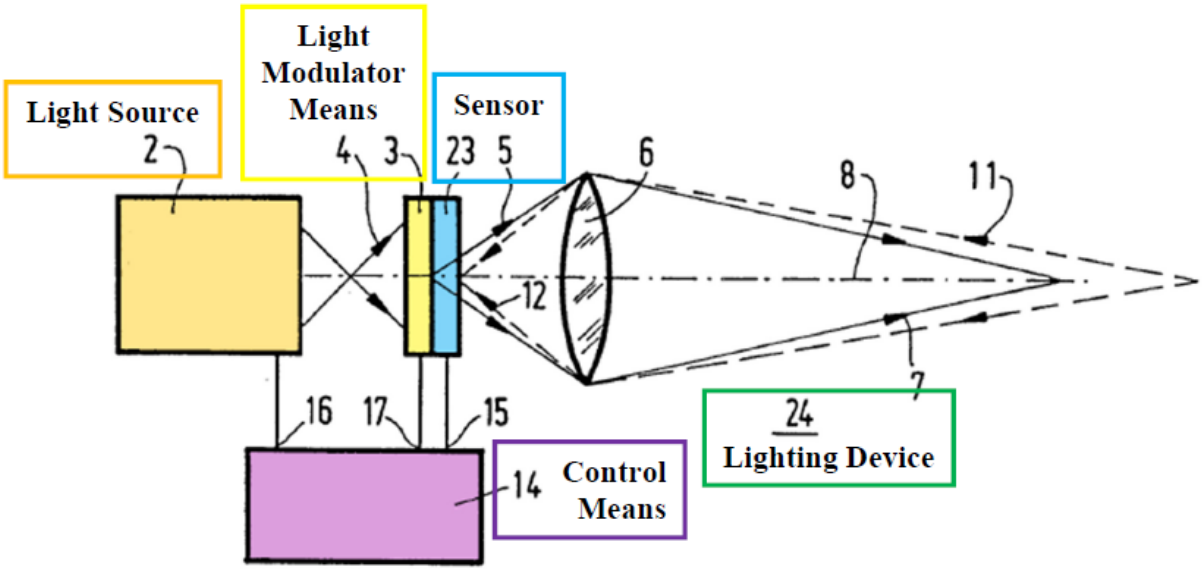


EX1010, FIG. 3 (annotated).

### N. Claims 18/57[20]

Laser diodes were well-known, and the '503 patent admits so. EX1006, ¶28; EX1037, Abstract; EX1001, 35:29-38; EX1003, ¶¶738-739. Using laser diodes would have been obvious for Karlsson's light source, and a simple substitution of one known light source for another. EX1003, ¶¶740-741. *KSR* at 416-418.

[19] Claims 14 and 53 are identical. EX1003, ¶734.

[20] Claims 18 and 57 are identical. EX1003, ¶738.

### O. Claims 19/58[21]

Karlsson's "light modulator means…[includes] *'Micro Mirrors'*." EX1010, 5:7-15, FIGS. 1, 3, 8:15-17 ("*lens 6*"), 8:27-35, Abstract, 9:3-33, 10:32-11:28; EX1003, ¶¶742-744.

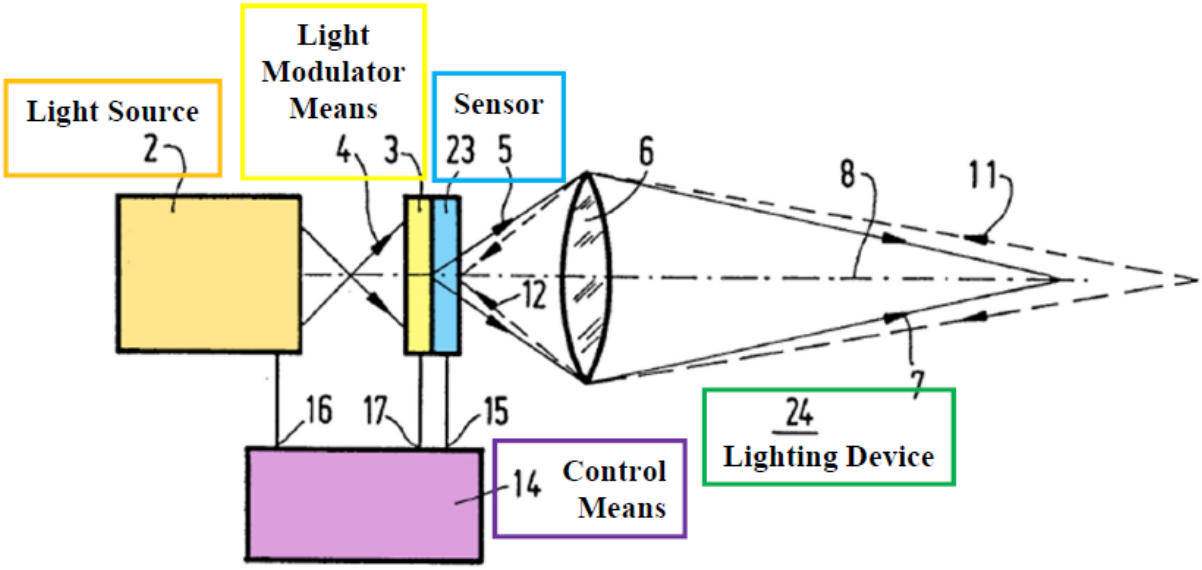


EX1010, FIG. 3 (annotated).

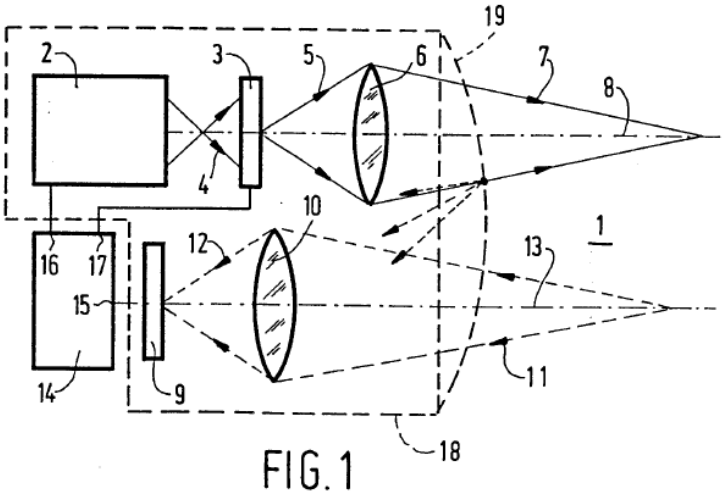


EX1010, FIG. 1.

[21] Claims 7-8 are patentably indistinct. EX1003, ¶742.

**P. Claim 38**

Karlsson's "*part of the light beam* which might cause *inconvenience to oncoming traffic* is automatically *suppressed*, whilst *retaining an optimum lighting* effect" "permitting a light intensity…*higher than that of conventional dipped headlights*." EX1010, 2:4-9, 9:9-26, Abstract, FIGS. 3, 6, 14-15, 19:23-33, 14:26-30, 3:27-31, 4:25-5:23; EX1003, ¶¶745-746.

Thus, Karlsson's processor processes the data, and determines an area to be reduced within a first subsection (including portion of the vehicle) and an area to be illuminated within a second subsection (including not a portion of the vehicle). EX1010, 2:4-9, 9:9-17, 12:19-24, 20:12-15, FIGS. 14-15; EX1003, ¶¶747-749.

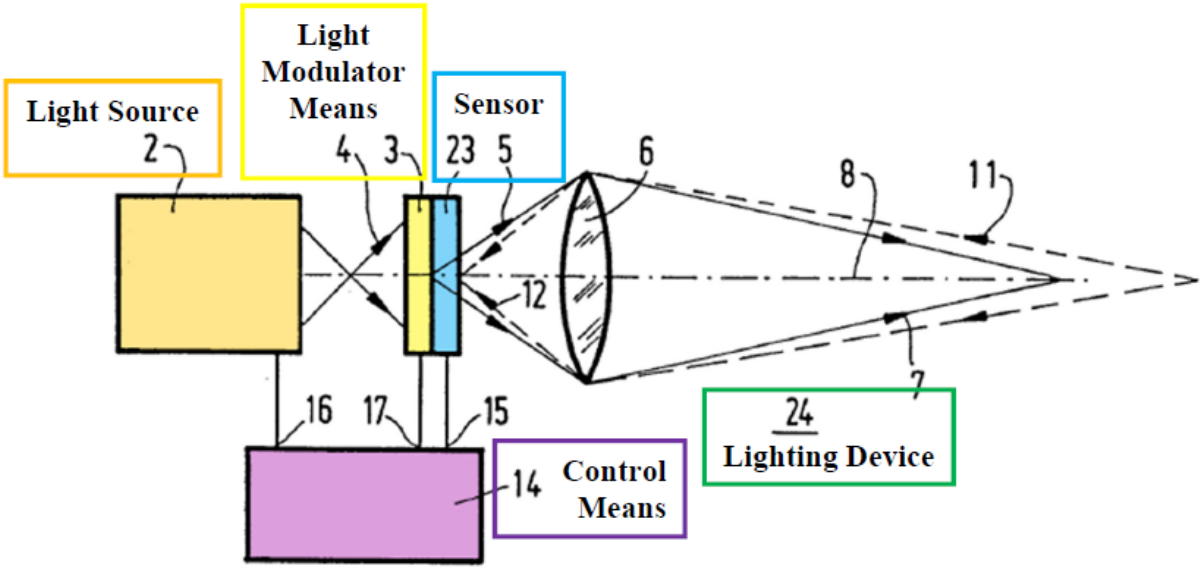


EX1010, FIG. 3 (annotated).

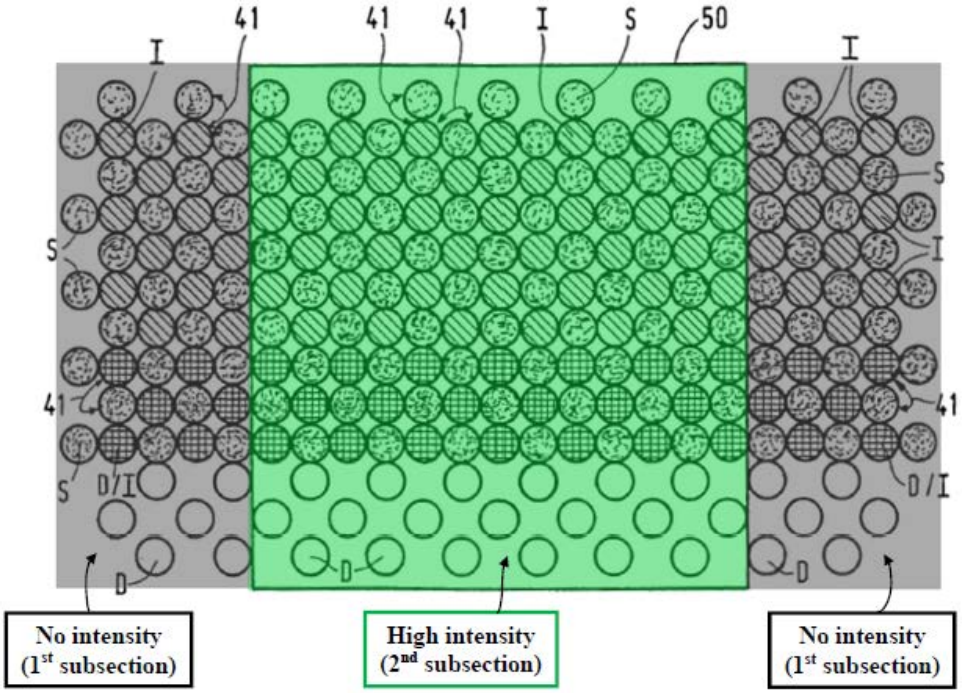


EX1010, FIG. 14 (annotated).

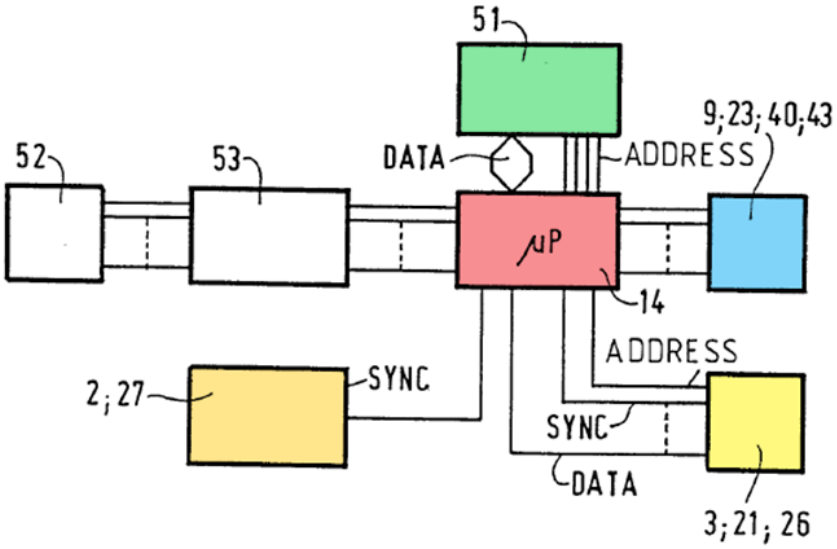


EX1010, FIG. 15 (annotated).

**Q. Claim 39**

*See supra* Section XI.B.4/XI.B.5; EX1003, ¶¶599-611, 750. Karlsson's first subsection illumination is "*no light at all* or *light having a low intensity*." EX1010,

9:9-26, 2:7-9, FIGS. 3, 14-15, 5:16-32, 14:26-30, 20:12-32, 21:36-22:4; EX1003, ¶751. Karlsson's second subsection illumination is "*higher* than that of conventional *dipped* headlights." EX1010, 9:9-26, Abstract, FIGS. 3, 14-15, 19:23-33, 2:7-9, 14:26-30, 5:16-32; EX1003, ¶752.

"Intensity" and "pattern" are "different illumination characteristics." EX1003, ¶753; EX1001, 16:43-50, 2:28-30. Thus, Karlsson's processor controls illuminator to reduce a first subsection and illuminate a second subsection based on "different illumination characteristics for each of the at least two sub-sections." EX1010, 2:4-9, 9:9-17, 12:19-24, 20:12-15, FIGS. 14-15; EX1003, ¶¶754-755.

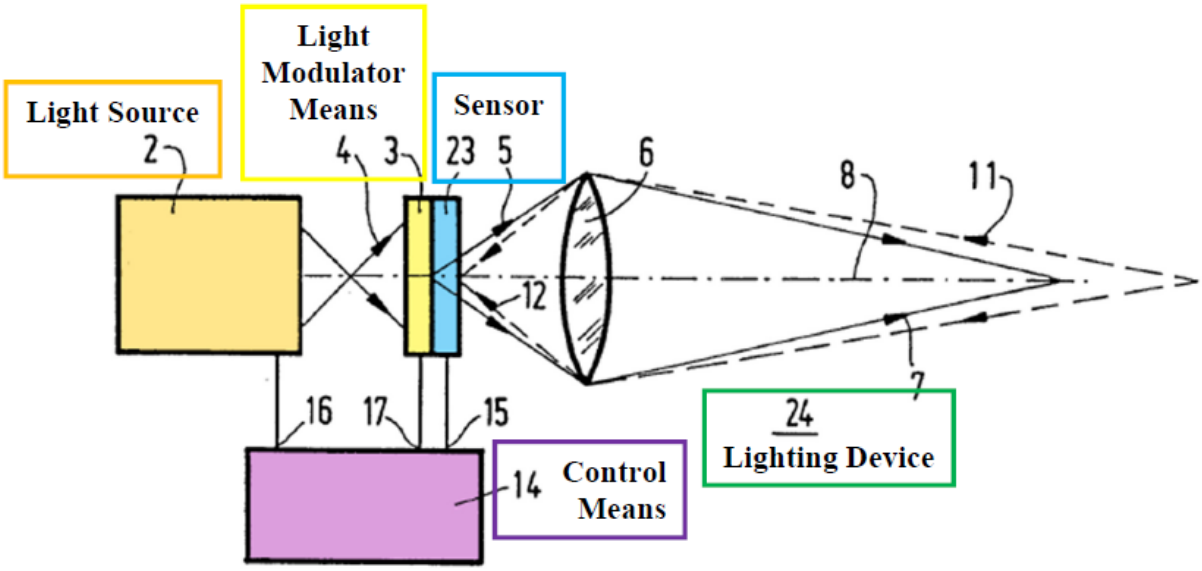


EX1010, FIG. 3 (annotated).

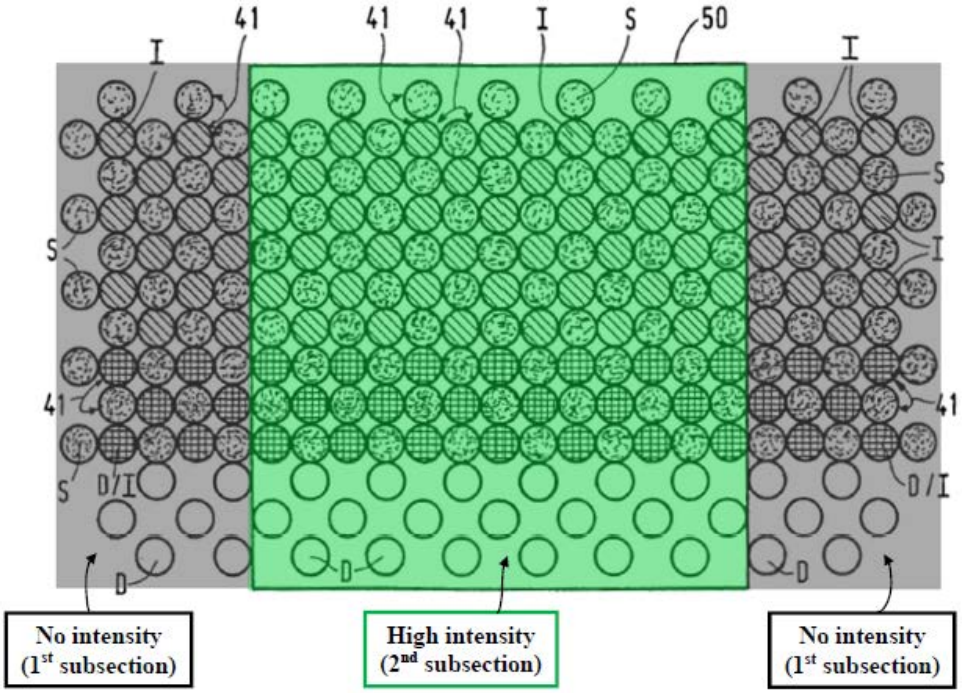


EX1010, FIG. 14 (annotated).

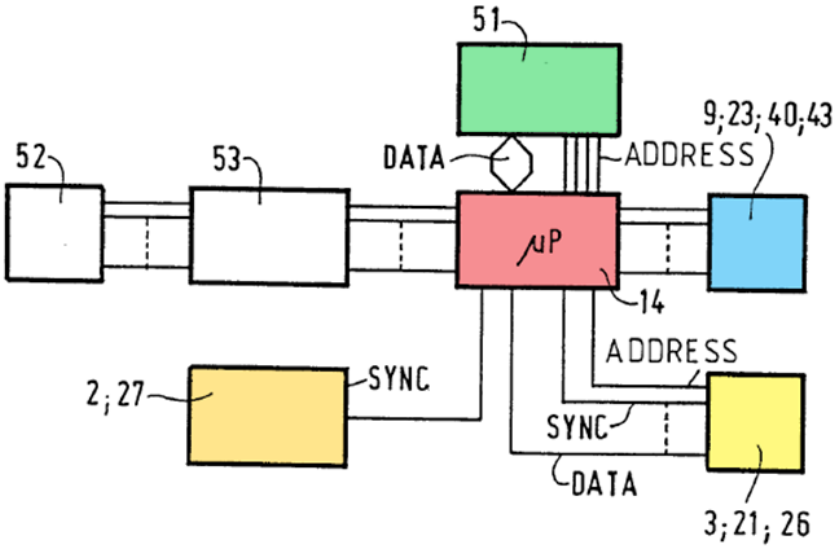


EX1010, FIG. 15 (annotated).

**R. Claim 40**

*See supra* Section XI.B.9; EX1003, ¶¶627-632, 756. Karlsson's first subsection is "*no light at all* or *light having a low intensity*." EX1010, 9:9-26, 2:7-9,

FIGS. 3, 14-15, 19:23-27, 5:16-32, 14:26-30, 20:12-32, 21:36-22:4; EX1003, ¶757. Karlsson's second subsection illumination is "*higher* than that of conventional *dipped* headlights." EX1010, 9:9-26, Abstract, FIGS. 3, 14-15, 19:23-33, 2:7-9, 14:26-30, 5:16-32; EX1003, ¶757. Thus, Karlsson's light distribution pattern defines illumination in a first subsection of the field-of-viewand illumination in a second subsection of the field-of-view. EX1010, 2:4-9, 9:9-17, 12:19-24, 20:12-15, FIGS. 14-15; EX1003, ¶¶758-759.

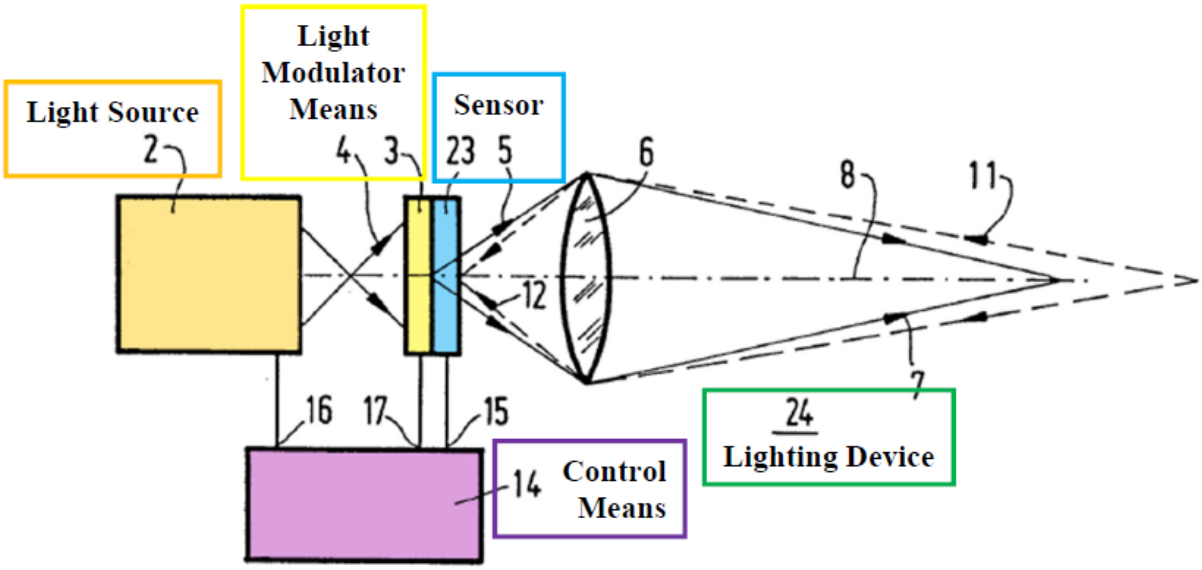


EX1010, FIG. 3 (annotated).

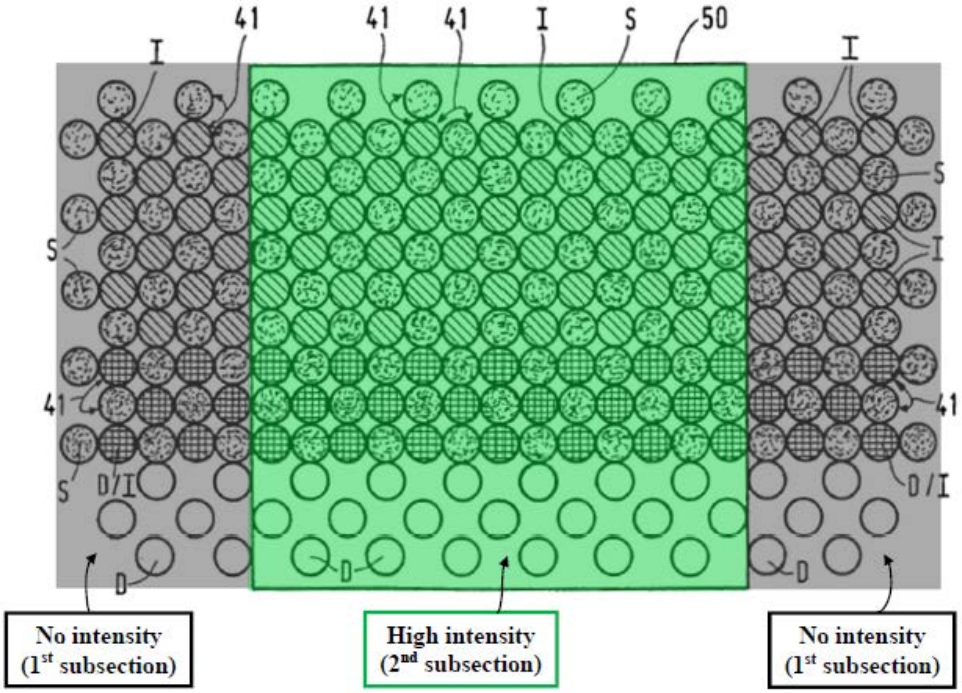


EX1010, FIG. 14 (annotated).

**S. Claim 41**

*See supra* Sections XI.B.9/XI.A/XI.C.1/VI.C.2; EX1003, ¶¶549-563, 627-632, 760-761.

Karlsson's first subsection illumination is "*no light at all* or *light having a low intensity*." EX1010, 9:9-26, 2:7-9, FIGS. 3, 14-15, 19:23-27, 5:16-32, 14:26-30, 20:12-32, 21:36-22:4; EX1003, ¶762. Karlsson's second subsection illumination is "*higher* than that of conventional *dipped* headlights." EX1010, 9:9-26, Abstract, FIGS. 3, 14-15, 19:23-33, 2:7-9, 14:26-30, 5:16-32; EX1003, ¶762. Thus, Karlsson's light distribution pattern illuminates a first subsection "below the predefined threshold" and illuminates a second subsection "above the predefined

threshold." EX1010, 2:4-9, 9:9-17, 12:19-24, 20:12-15, FIGS. 14-15; EX1003, ¶¶763-764.

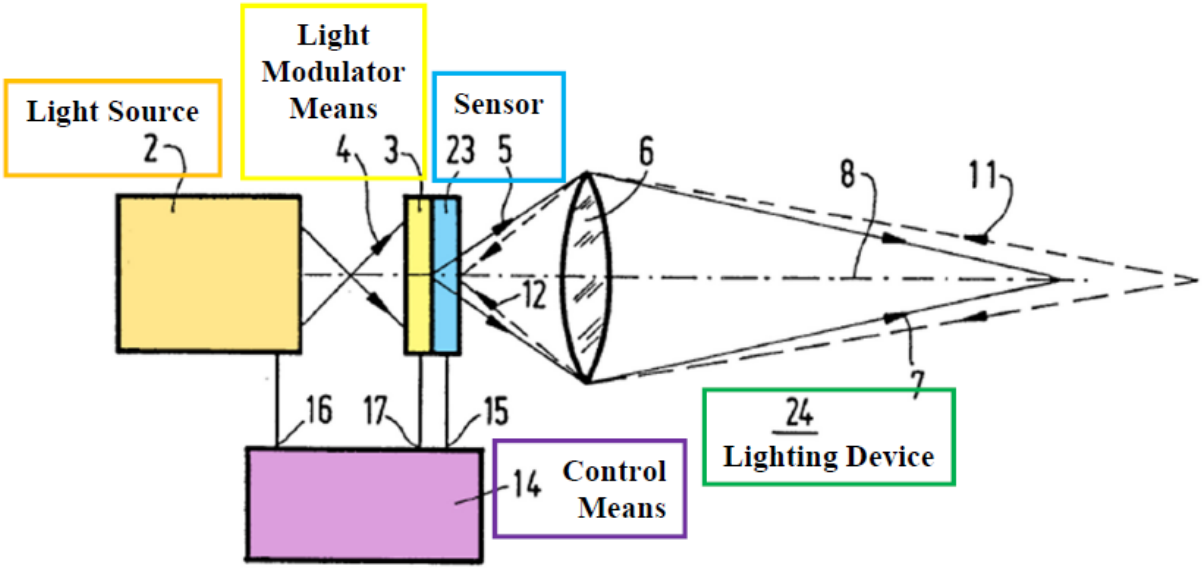


EX1010, FIG. 3 (annotated).

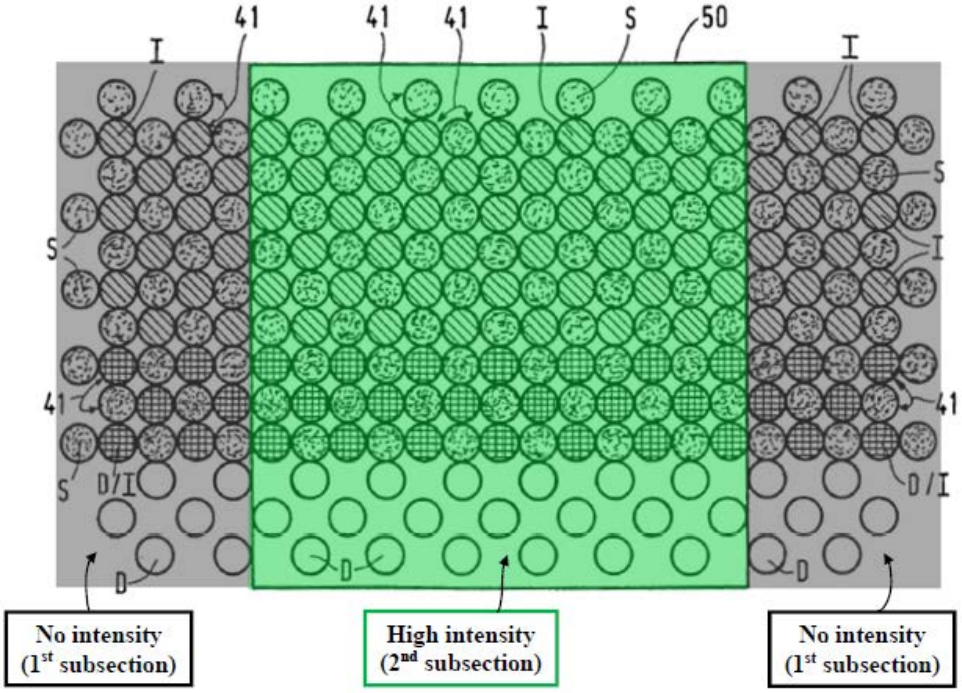


EX1010, FIG. 14 (annotated).

### T. Claim 51

Karlsson's "light beam 7…[is] *optimally adapted*" and "permit[s] a light intensity…*higher than that of conventional dipped headlights*." EX1010, 9:9-26, Abstract, FIGS. 3, 14-15, 19:23-33, 2:7-9, 14:26-30, 5:16-32; EX1003, ¶765. Also Karlsson's "light beam 7…[is] controlled…[so] *no light at all* or *light having a low intensity* is emitted…[thus] *glaring or blinding*…is effectively *prevented*." EX1010, 9:9-26, FIGS. 3, 14-15, 19:23-27, 5:16-32, 14:26-30, 20:12-32, 21:36-22:4, 2:4-9, 12:19-24, FIGS. 3, 14-15; EX1003, ¶¶766-768.

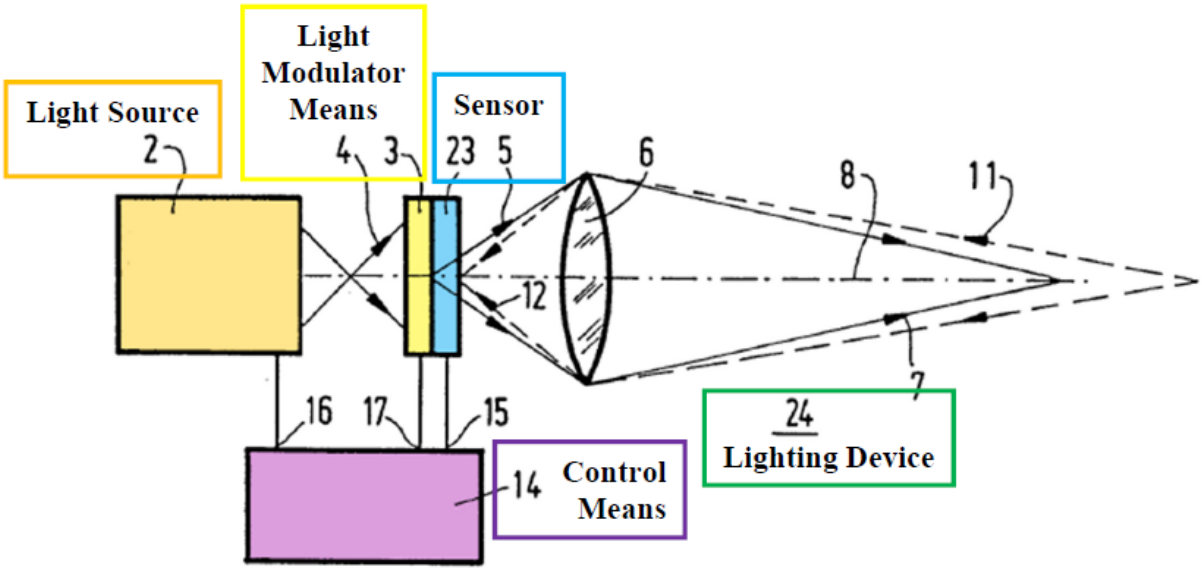


EX1010, FIG. 3 (annotated).

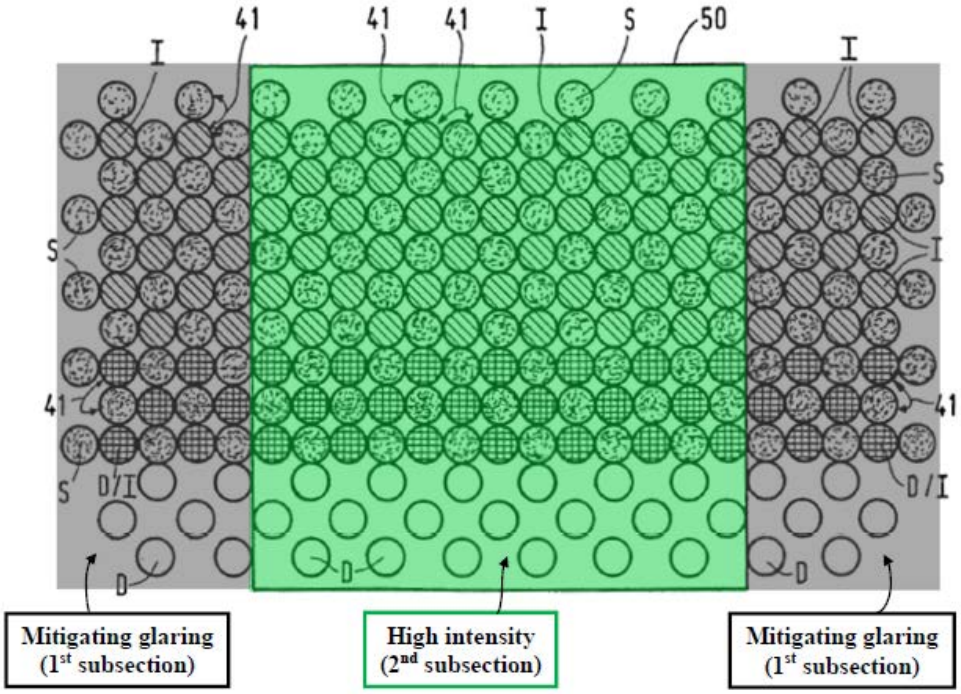


EX1010, FIG. 14 (annotated).

### U. Claim 52

Karlsson's second subsection illumination is "*higher* than that of *conventional dipped headlights*." EX1010, 9:9-26, 1:27-30 ("*high beams* or *main-beams*"), 2:7-9 ("*part of the light beam*…is…suppressed, whilst *retaining an optimum lighting* effect"), Abstract, FIGS. 3, 14-15, 19:23-33, 14:26-30, 5:16-32; *supra* Section XI.L; EX1003, ¶¶769-771.

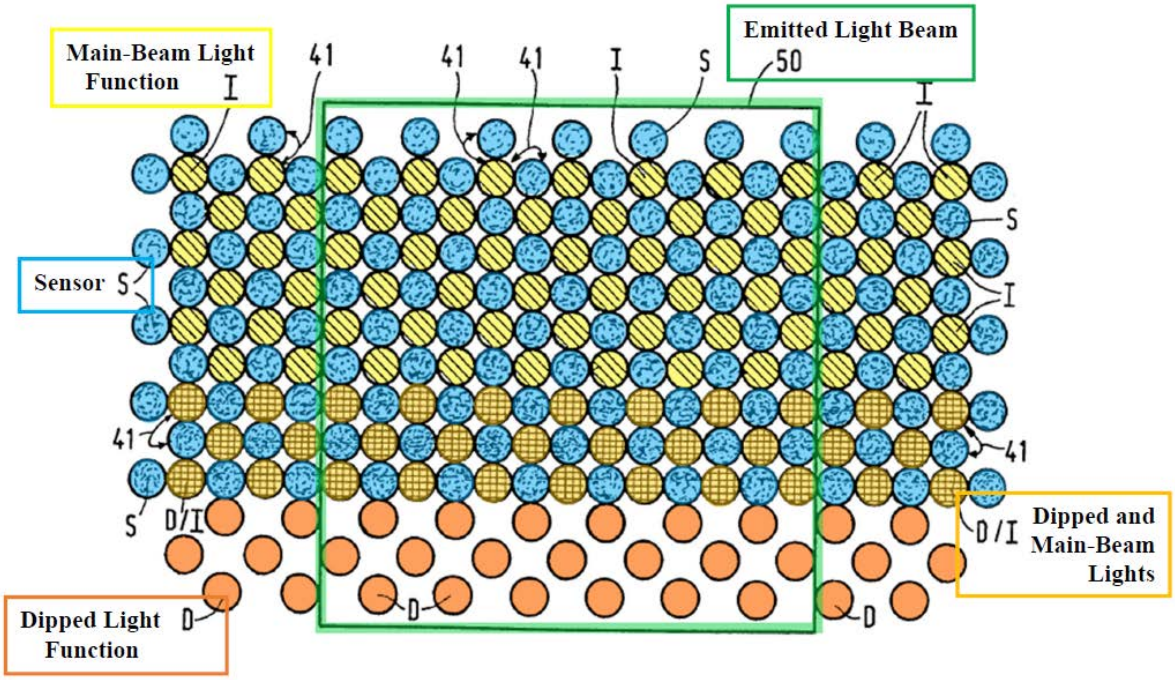


EX1010, FIG. 14 (annotated).

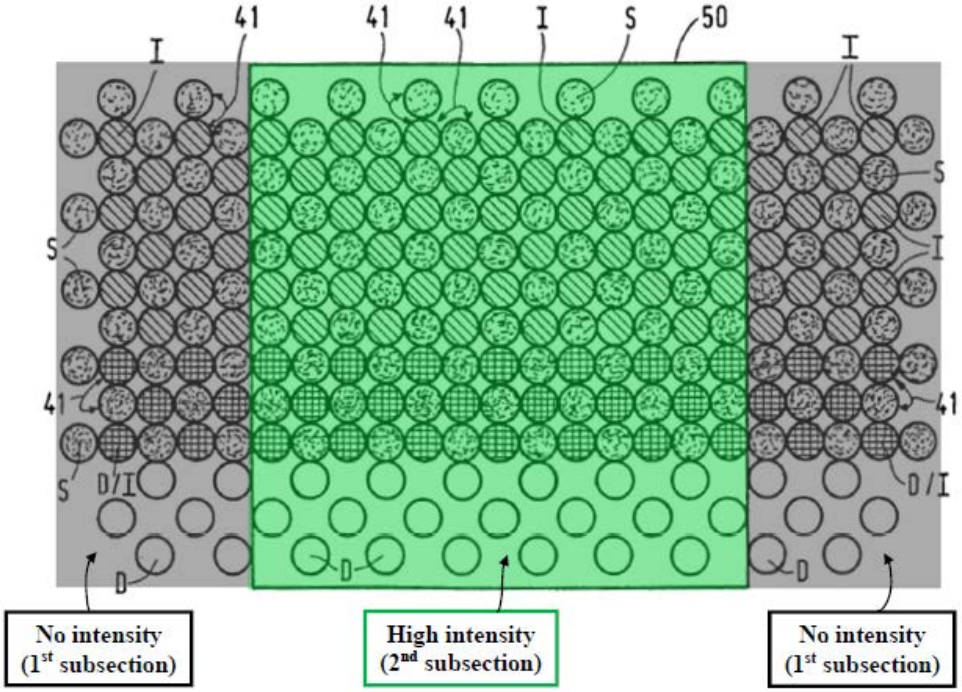


EX1010, FIG. 14 (annotated).

## XII. GROUND 8: THE COMBINATION OF KARLSSON, HARBERS, AND GOTOU RENDERS OBVIOUS CLAIMS 9, 15-17, 49, AND 54-56.

### A. A POSA would have been motivated to combine Gotou with Karlsson-Harbers with a reasonable expectation of success.

A POSA would have been further motivated to modify Karlsson-Harbers to adjust light based on GPS sensor data including road curvature, as in Gotou, to further control Karlsson-Harbers's light to illuminate curves/turns. EX1003, ¶¶103-113, 772-775; EX1010, 1:16-26, 4:17-21, 9:18-26.

*First*, including an additional data source for Karlsson-Harbers's controller—Gotou's *known technique* of using GPS data—would have enhanced Karlsson-Harbers by increasing/adjusting illumination based on an upcoming curve/turn, improving safety by providing light to where it is needed. *Second*, a POSA would have easily incorporated *known components* of Gotou's navigation system 30 (including GPS receiver 34, *see* EX1012, Abstract, 1:35-40, 2:8-26, 3:24-62, 4:45-49, 6:4-61, 7:32-43, 8:28-35, FIGS. 1-3, 8-10) into Karlsson-Harbers. EX1003, ¶776. This would have provided road curvature data for Karlsson-Harbers to increase increase/adjust illumination toward the upcoming curve/turn. *Id.*, ¶776.

Karlsson recognizes safety benefits of using a "*direction sensor 54*…for determining when the car 56 is *taking a bend*, so that the light beam 7 [is] *adapted*." EX1010, 1:35-2:18; 20:22-32, FIG. 16, 6:28-33, 9:17-28; EX1003, ¶¶777-778.

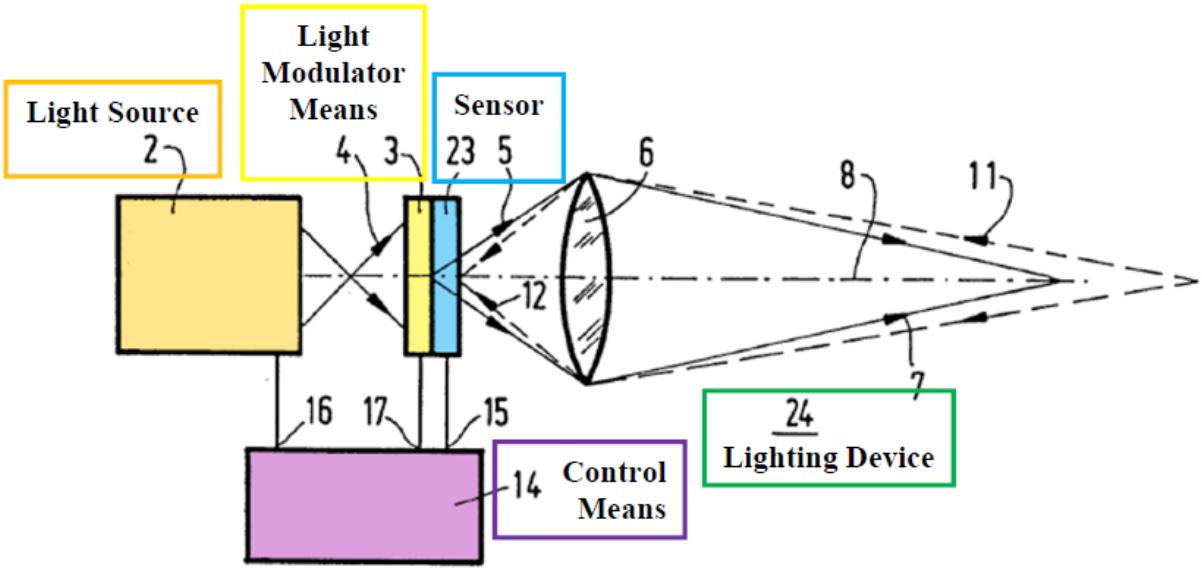


EX1010, FIG. 3 (annotated).

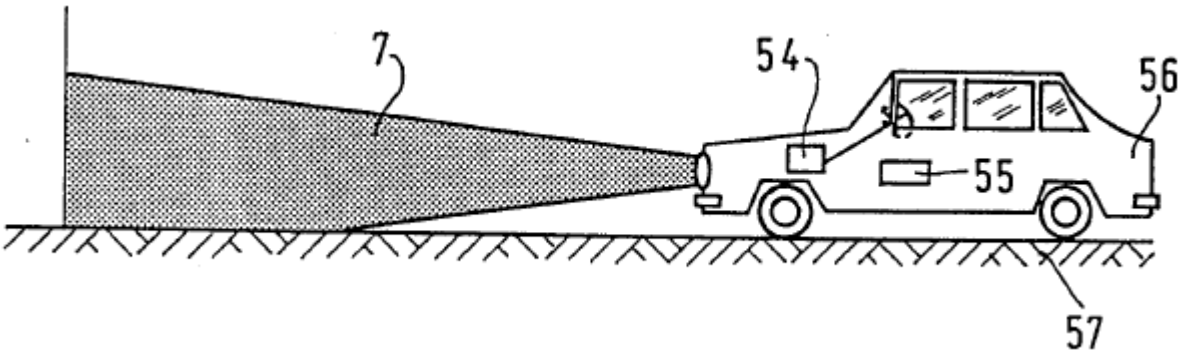


EX1010, FIG. 16.

Gotou's active *techniques and system components*, like Karlsson-Harbers, seek to enhance safety—using GPS data-based control to control light direction. EX1012, 1:17-20, 2:19-26, 6:40-44; EX1003, ¶779. Gotou's navigation system 30 data is input to ECU 10, which alters the light direction from headlamp 2 in response to GPS data. EX1012, 4:30-49, 6:4-61, 8:28-35, FIGS. 1-3, 2:19-26;

EX1003, ¶779. Gotou responds to real-world conditions, multiple curves, and intersections. EX1012, 1:52-59, 2:19-26, 6:40-44, 8:28-35; EX1003, ¶779.

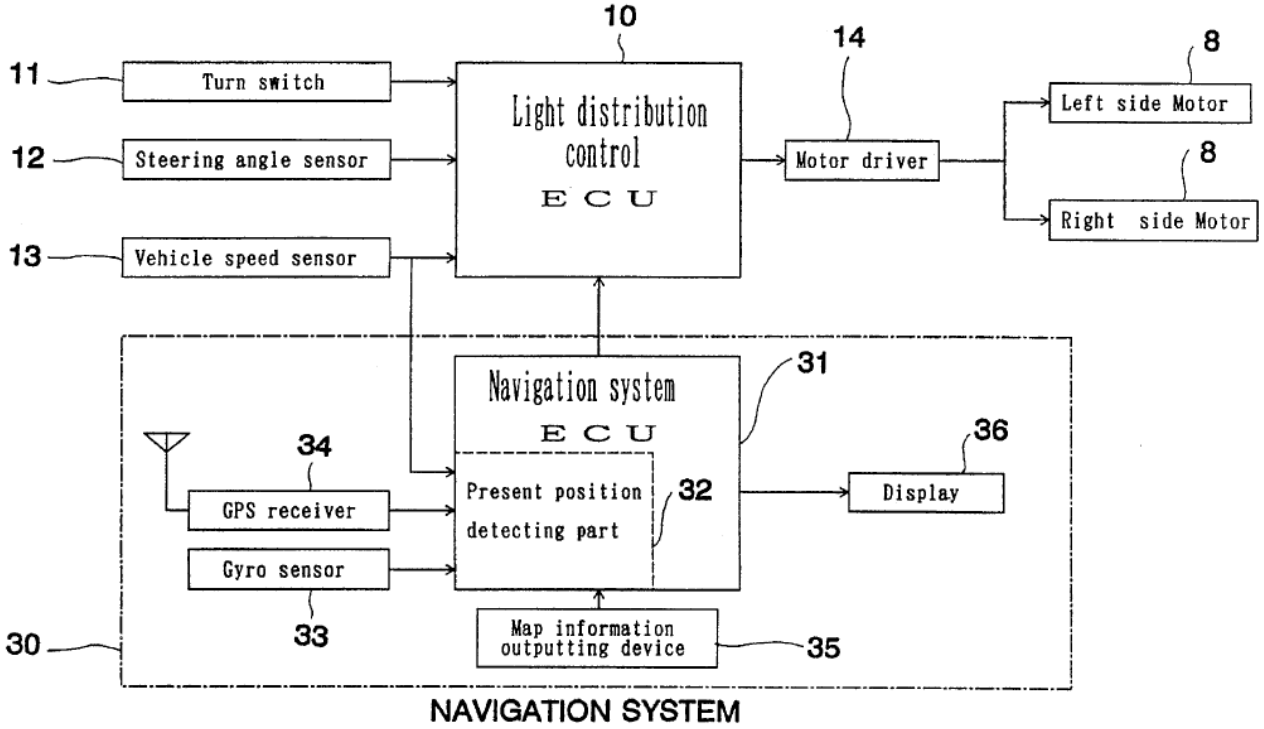


EX1012, FIG. 3.

When there is a planned leftward curve, for example, the light distribution is adjusted leftward prior to reaching the curve. EX1012, 3:24-62, 7:32-43, 8:28-35, FIGS. 8-9; EX1003, ¶780.

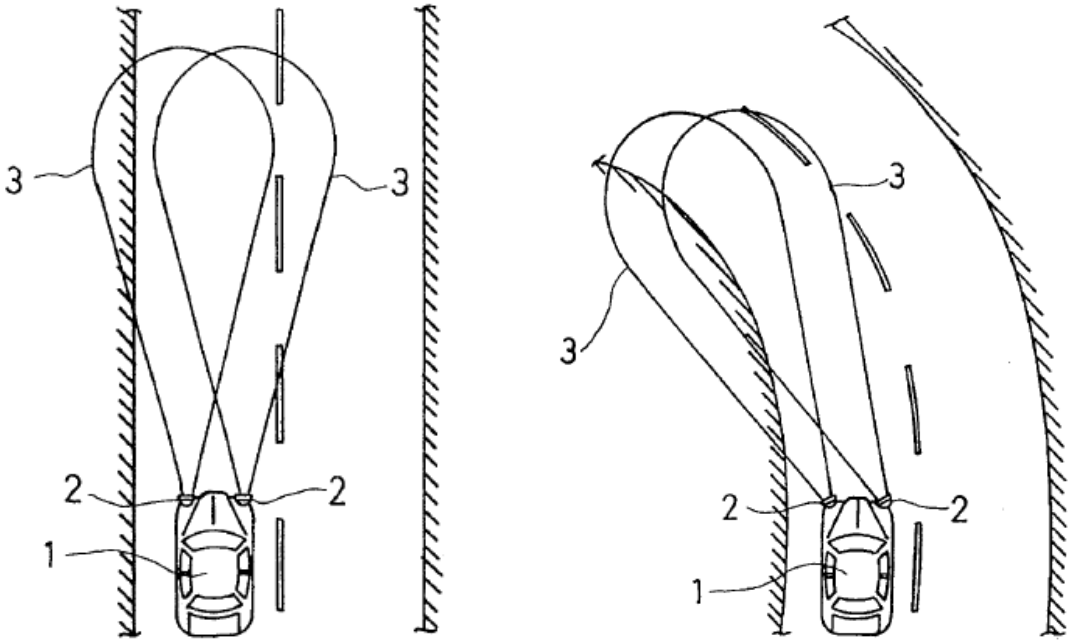


EX1012, FIGS. 8-9.

Including an additional data source for Karlsson-Harbers's controller/processor—Gotou's GPS data—would have enhanced Karlsson-Harbers by increasing/adjusting illumination of upcoming curves/turns, thereby improving safety. EX1003, ¶781. This would have been applying Gotou's known technique (GPS input to direct/redirect light) to Karlsson-Harbers's similar, known device (dynamic headlamp system), in the same way. *Id.*, ¶781; *KSR* at 417. Gotou's known technique is fully described along with its benefits (improved visibility and safety); thus, a POSA would have readily applied it to similar systems in the same way. EX1003, ¶781; *KSR* at 419-421.

This modification would have been combining known prior-art elements (Karlsson-Harbers's adaptive, direction-controllable headlamps with Gotou's

directional control based on GPS data) according to known methods to yield predictable results (illuminating curves/turns). EX1003, ¶782; *KSR* at 415-416.

A POSA would have had a reasonable expectation of success combining Gotou with Karlsson-Harbers, for example, by modifying software instructions stored in memory of Karlsson-Harbers's controller/processor (ECU) to adjust and direct light appropriately in view of Gotou's GPS data (including road curvature/turns). EX1003, ¶783. It also would have been a straightforward combination of prior-art elements: Gotou's navigation system 30 (including GPS receiver 34) with Karlsson-Harbers (in communication with Karlsson's controller). *Id.*, ¶783.

This would have been routine and well within a POSA's skill due to the similarities in Karlsson-Harbers's and Gotou's adaptive light control systems and methods—their common components were well-known and there would have been no limitations for a POSA to make such modifications. *Id.*, ¶¶784-785.

### B. Claims 9/49[22]

Gotou's "*GPS receiver 34*" is connected to navigation system ECU 31 to detect an accurate position of the vehicle. EX1012, 3:52-4:11, FIGS. 3, 8-10, 6:40-44, 8:28-35; EX1003, ¶¶786-789.

[22] Claims 9 and 49 are patentably indistinct. EX1003, ¶786.

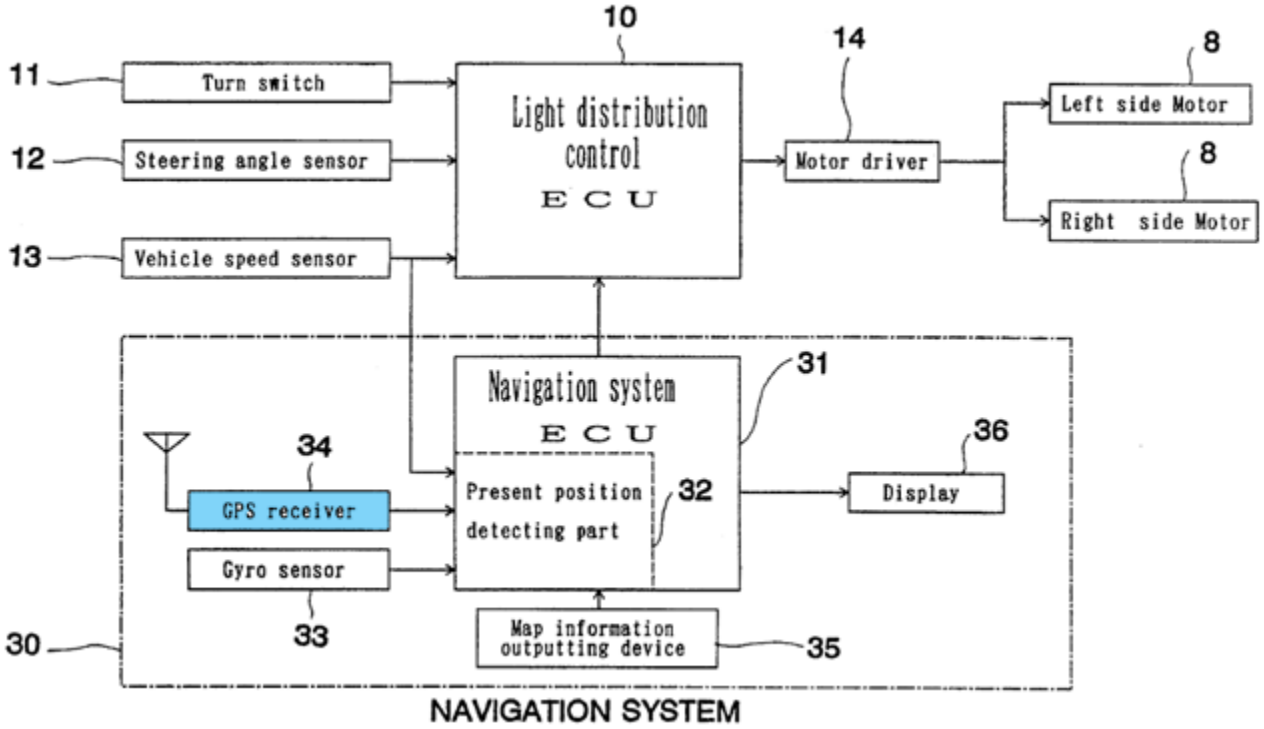


EX1012, FIG. 3 (annotated).

*Supra* Section XII.A; EX1003, ¶¶772-785, 790-804.

Thus, Karlsson-Harbers-Gotou renders obvious claims 9 and 49. EX1003, ¶804.

### C. Claims 15/54[23]

Gotou's "ECU 10 gets *map information*…from the navigation system 30…to *determine a requisite optical axis angle θ*" and "estimation of the *forward road shape*…[based] on the *road data* of the map information," which includes "curves." EX1012, 3:52-67, 8:28-35, FIGS. 3, 8-9, 4:30-49, 6:28-39; EX1003, ¶¶805-809.

[23] Claims 15 and 54 are patentably indistinct. EX1003, ¶805.

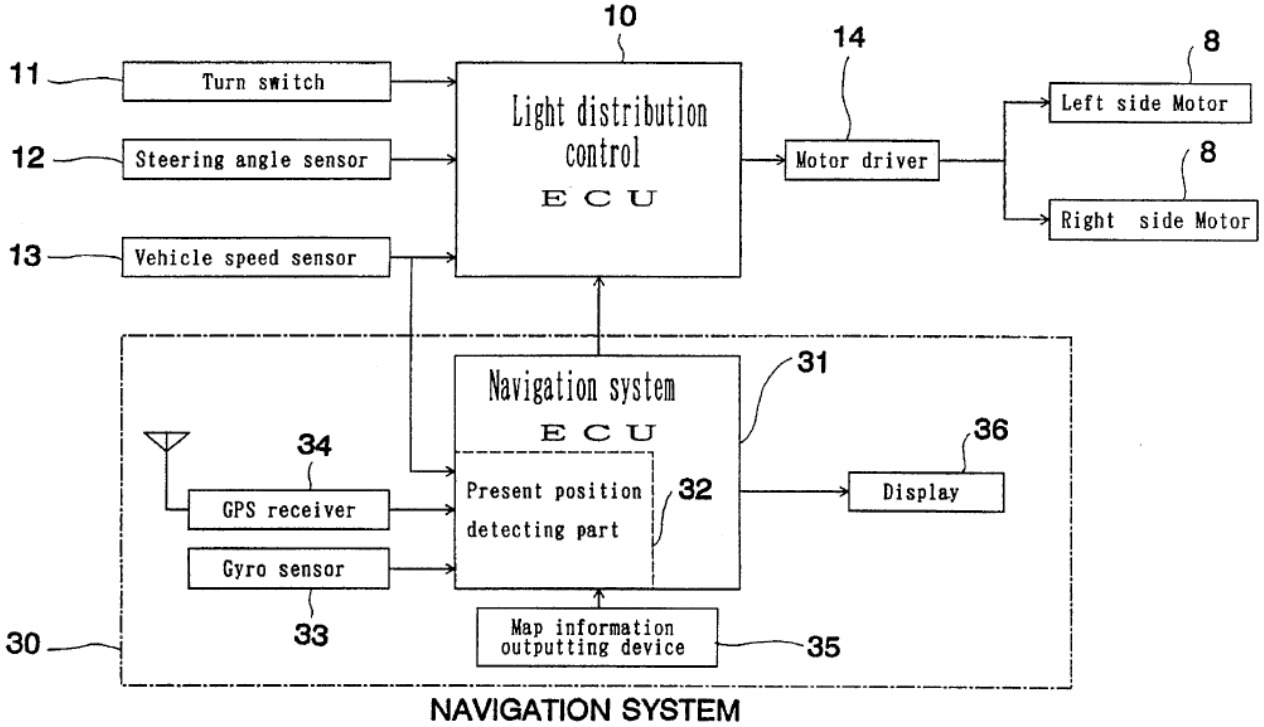


EX1012, FIG. 3.

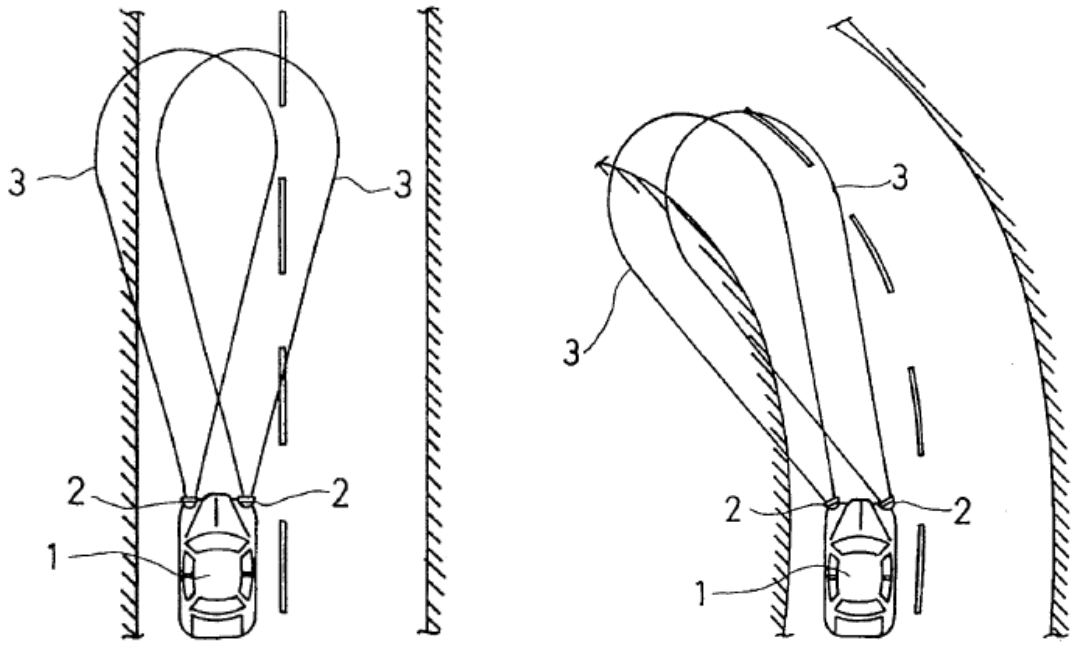


EX1012, FIGS. 8-9.

*Supra* Section XII.A; EX1003, ¶¶772-785, 810-824.

Thus, Karlsson-Harbers-Gotou renders obvious claims 15 and 54. EX1003, ¶824.

### D. Claims 16/17[24]/55[25]/56[26]

Gotou's "ECU 10 gets *map information*…from the navigation system 30…to *determine a requisite optical axis angle θ*" and "map information…*improves the visibility*…toward the *planned running direction* at an early stage *before the steering wheel is actually turned*." EX1012, 3:52-67, 6:8-44, FIGS. 3, 8-10; EX1003, ¶¶825-832.

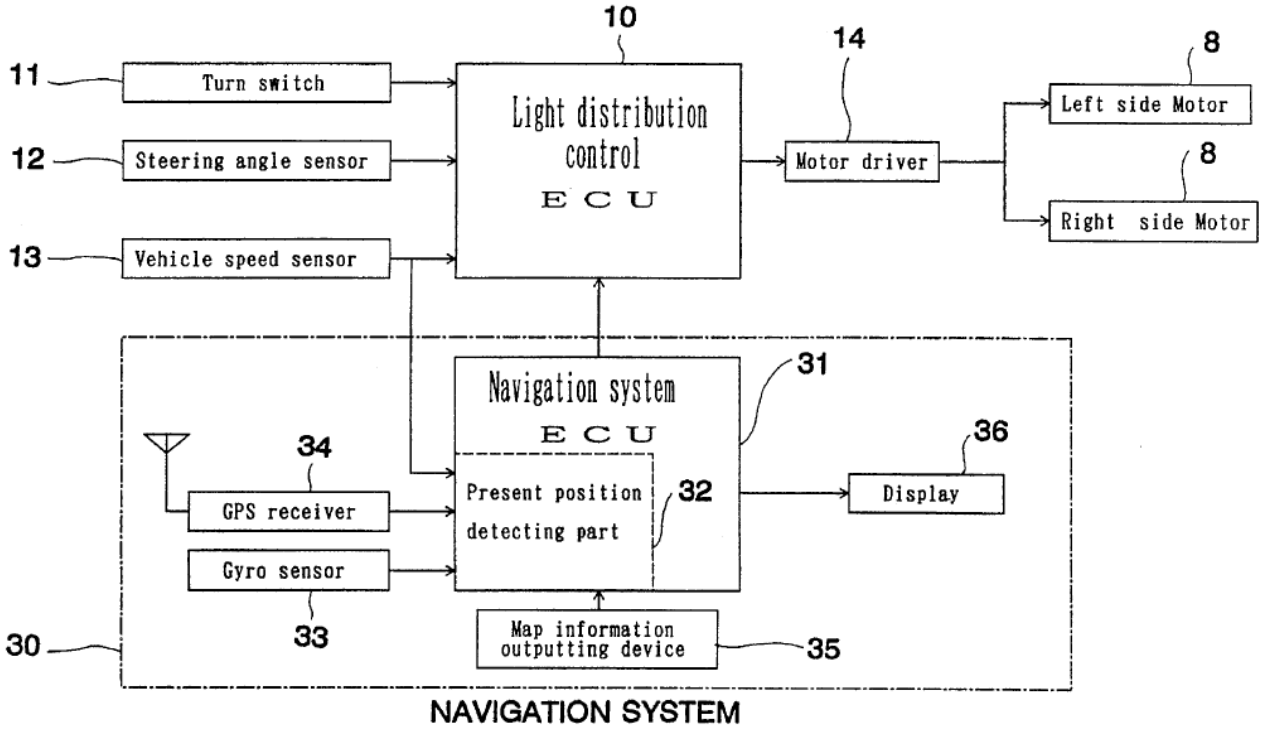


EX1012, FIG. 3.

[24] Claims 16-17 are identical. EX1003, ¶825.

[25] Claims 16 and 55 are patentably indistinct. EX1003, ¶826.

[26] Claims 55-56 are identical. EX1003, ¶827.

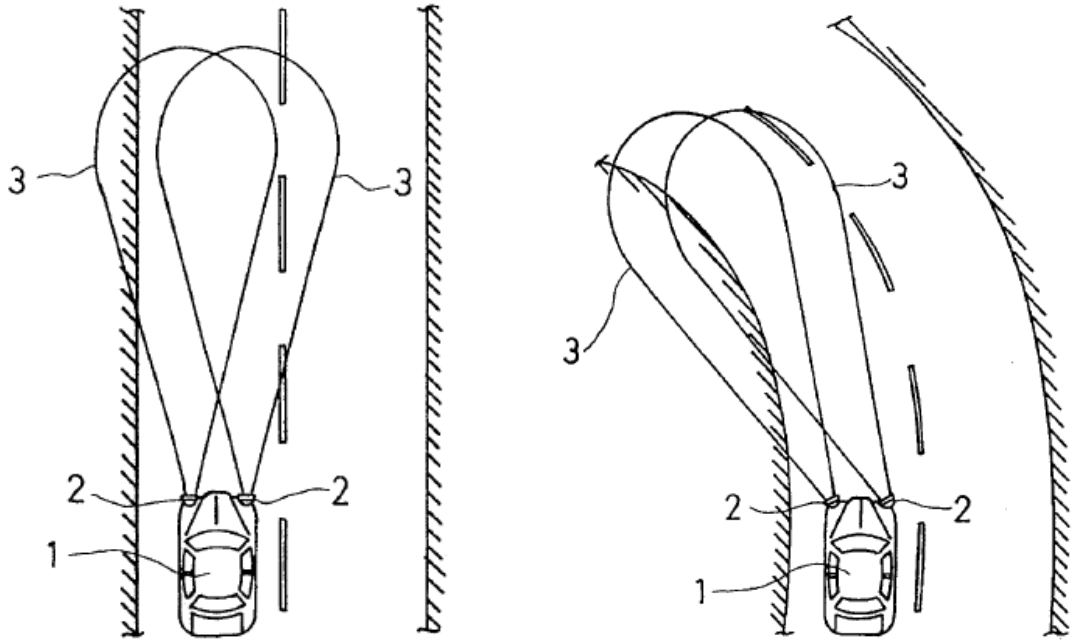


EX1012, FIGS. 8-9.

*Supra* Section XII.A; EX1003, ¶¶772-785, 833-847.

Thus, Karlsson-Harbers-Gotou renders obvious claims 16-17 and 55-56. EX1003, ¶¶847-848.

## XIII. GROUND 9: THE COMBINATION OF KARLSSON, HARBERS, AND BRAUN RENDERS OBVIOUS CLAIMS 6 AND 46.

### A. A POSA would have been motivated to combine Braun with Karlsson-Harbers with a reasonable expectation of success.

A POSA would have been further motivated to modify Karlsson-Harbers to include IR/UV wavelengths, as in Braun (EX1009, 3:4-27, 8:4-5, 9:23-28, 14:21-30, 18:13-14, 19:9-21, 20:25-21:16, FIGS. 3-6), to further control Karlsson-Harbers's adaptive headlamps to illuminate a roadway, thereby improving visibility. EX1003, ¶¶101-112, 114, 849-850; EX1010, 1:16-26, 4:17-21, 9:18-26; EX1011, 5:1-26, 7:1-14, 9:1-32.

A POSA would have sought to incorporate *known components* (hardware implementation) of Braun's colored luxels 26 (with IR/UV wavelengths, *see* EX1009, 3:4-8, 3:26-27, 8:4-5, 9:23-28, 14:21-30, 18:13-14, 19:9-21, 20:25-21:16, FIGS. 3-6) into Karlsson-Harbers. EX1003, ¶851. This would have provided different colored spatial distributions for different situations. *Id.*, ¶851. Additionally this would have provided improved illumination of fluorescent surfaces (UV luminescence) and/or provided distance ranging to objects (IR sensing). *Id.*, ¶¶852-853.

Karlsson's spotlight beams (LEDs) modified by Harbers provides differently colored beam segments 6-6'-6"-6''', 7-7'-7"-7''' forming different distributions. EX1011, 5:14-26, 6:1-7:32, FIGS. 1B-2, 4A, 9:22-10:14, 13:5-7; EX1003, ¶¶854-855; *see also* EX1010, 1:21-26.

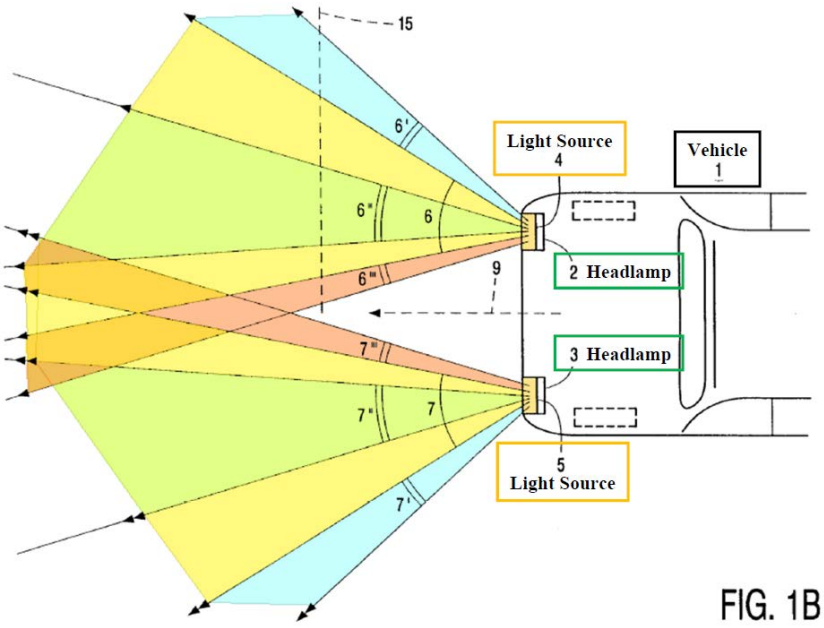


EX1011, FIG. 1B (annotated).

And through its *system components*, Braun seeks to enhance visibility. EX1009, 3:4-27, 8:4-5, 9:23-28, 14:21-30, 18:13-14, 19:9-21, 20:25-21:16, FIGS. 3-6; EX1003, ¶856. Braun's colored luxels 26 provide "adaptive illumination of a *roadway* and *neighboring regions*" (road-signs 121, 122) and "luxels 26…comprise *infrared* or *ultraviolet* light." EX1009, 14:21-30, 5:22-25, FIGS. 2-3, 5-6, 21:1-12, 18:13-14; EX1003, ¶856. Providing such luxels would have been a natural extension and improvement on Karlsson's adaptive system. EX1003, ¶856.

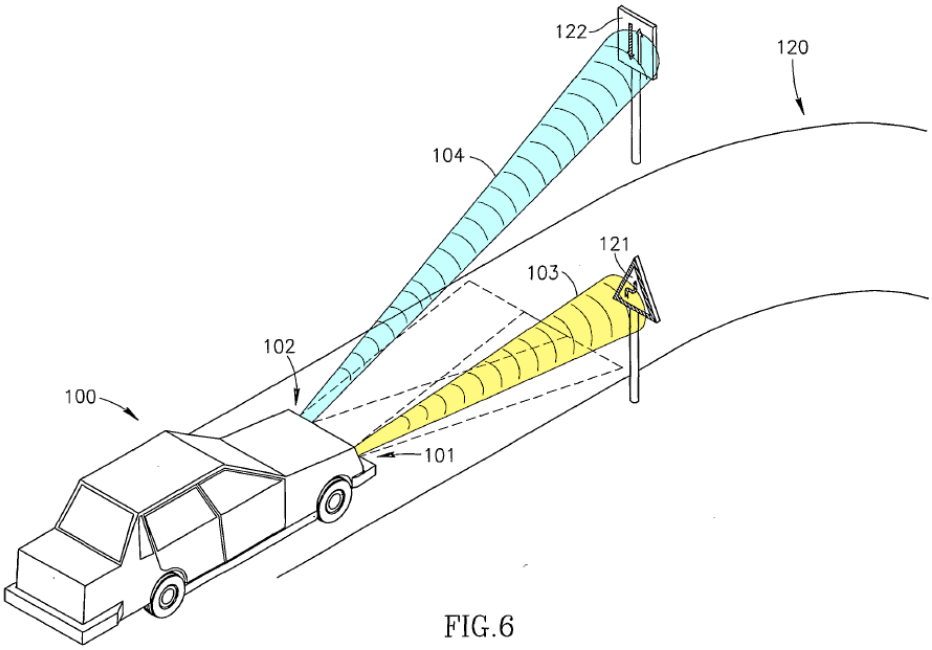


EX1009, FIG. 6 (annotated).

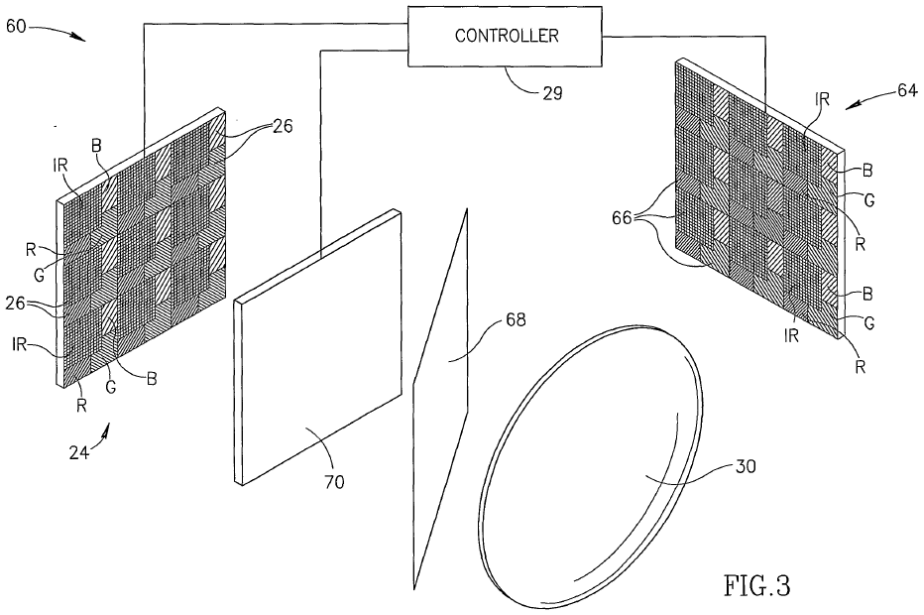


EX1009, FIG. 3.

This hardware combination—Karlsson's spotlight beams array (LEDs) and Braun's differently colored luxels including IR/UV wavelengths—would have provided Karlsson-Harbers with different colored spatial distributions for different situations. EX1003, ¶857. This would have been combining prior-art elements or a simple substitution of one known element for another (Karlsson's/Braun's respective arrays) according to known methods to yield predictable results (improved visibility and safety). *Id.*, ¶857; *KSR* at 415-418.

A POSA would have had a reasonable expectation of success combining Karlsson-Harbers and Braun, for example, by modifying Karlsson's LEDs with Braun's colored LEDs to provide colored light sources with IR/UV wavelengths for different functions. EX1003, ¶858. This would have been routine and well within a POSA's skill due to the similarities in Karlsson-Harbers's and Braun's adaptive

systems—their common components were well-known and there would have been no limitations for a POSA to make such modifications. *Id.*, ¶¶858-859.

### B. Claims 6/46[27]

Karlsson-Harbers's "spotlight beams 34 [are]…*LEDs*" providing differently colored beam segments. EX1010, 1:16-24, 14:1-15, FIGS. 3, 6, 14, 11:25-28, 4:25-5:15; EX1011, 5:14-26, 6:1-7:32, FIGS. 1B-2, 10:6-14, 9:22-10:5, 13:5-7; EX1003, ¶¶860-862.

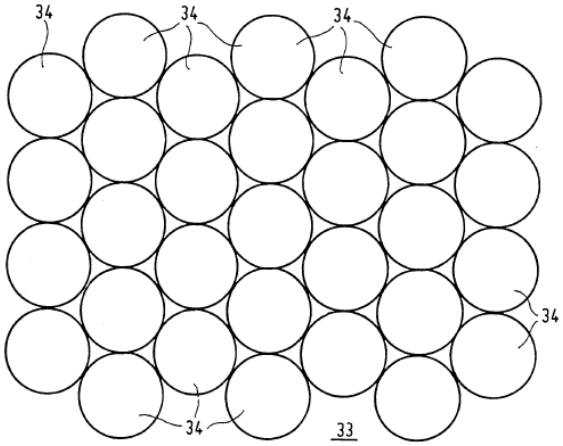


FIG. 6

EX1010, FIG. 6.

[27] Claims 6 and 46 are patentably indistinct. EX1003, ¶860.

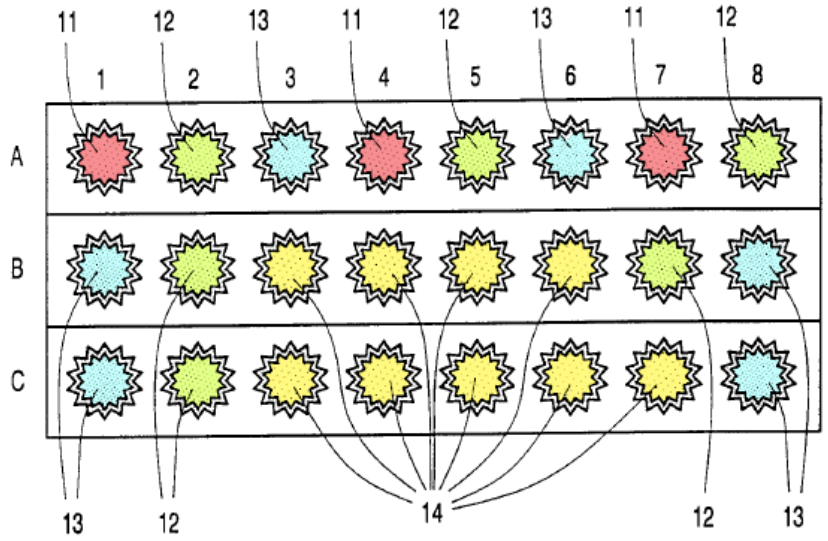


EX1011, FIG. 2 (annotated).

Braun's luxels include IR/UV light. EX1009, 14:21-30, 5:22-25, FIGS. 2-3, 5-6, 18:13-14; EX1003, ¶863.

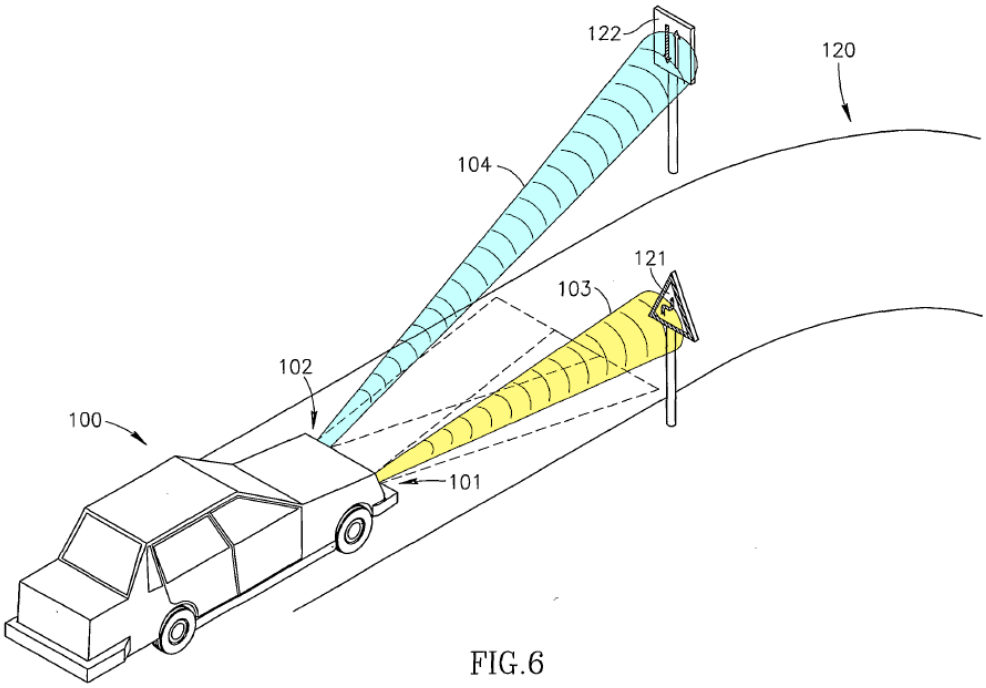


EX1009, FIG. 6 (annotated).

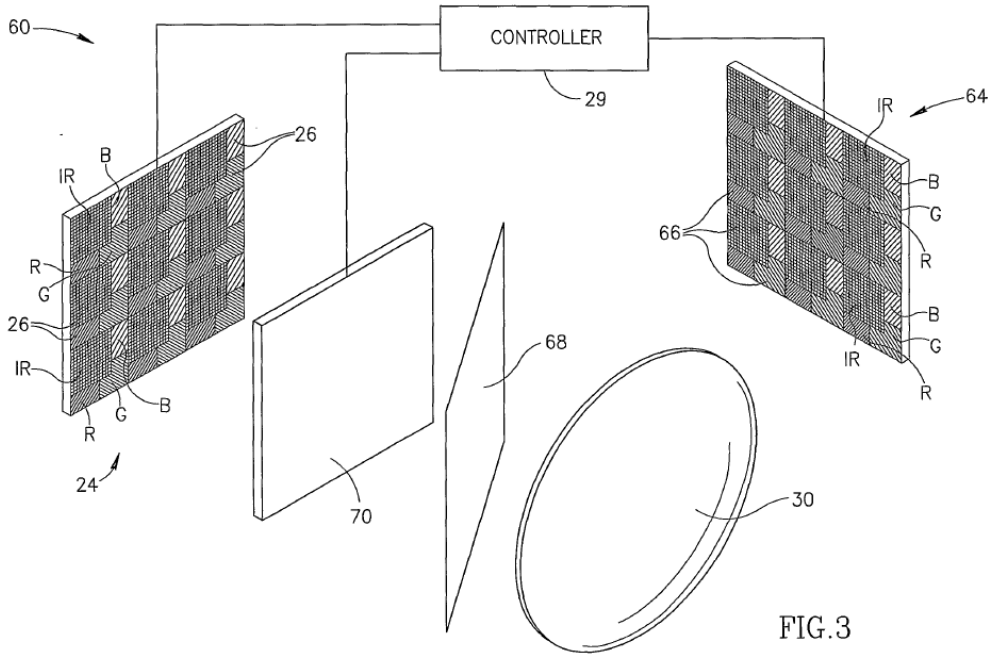


EX1009, FIG. 3.

*Supra* Section XIII.A; EX1003, ¶¶850-859, 864-875.

Thus, Karlsson-Harbers-Braun renders obvious claims 6 and 46. EX1003, ¶¶875-876.

## XIV. PETITIONER IS UNAWARE OF SECONDARY CONSIDERATIONS

Petitioner is not aware of any evidence of alleged secondary considerations of non-obviousness having nexus to the challenged claims. *Id.*, ¶¶877-879. Patent Owner submitted alleged evidence in a reexamination of U.S. Patent No. 9,955,551, but the Central Reexamination Unit did not address it. EX1033, 66-83, 930-943. Regardless, the ’503 patent involves different claims, for which that evidence is inapplicable. Petitioner reserves the right to address any evidence Patent Owner presents.

## XV. DISCRETIONARY CONSIDERATIONS UNDER SECTIONS 314(A) AND 325(D) STRONGLY FAVOR INSTITUTION

### A. The *Fintiv* factors strongly favor institution.

The *Fintiv* factors strongly favor institution. *Apple Inc. v. Fintiv, Inc.*, IPR2020-00019, Paper 11 (P.T.A.B. Mar. 20, 2020) (precedential); *see* June 21-2022 Memorandum: Interim Procedure for Discretionary Denials in AIA Post Grant Proceedings with Parallel District Court Litigation ("June 2022 Memo").

**Factor 1** is neutral or favors institution. No motion for stay has been filed and the court has not indicated whether it would grant any such motion. Because the Board typically "will not attempt to predict how the district court in the related district court litigation will proceed," *Sand Revolution II, LLC v. Continental Intermodal Group – Trucking LLC*, IPR2019-01393, Paper 24, 7 (P.T.A.B. June 16, 2020) (informative), factor 1 carries little weight here.

**Factor 2** strongly favors institution. The co-pending litigation in the DDE is in its early stages and a trial date has been set for November 18, 2024 (23 months). EX1035, District Court Statistics, 14; *see* June 2022 Memo, 3. Thus, trial would likely occur (if at all) in late-2024—over 5 months after the projected final decision here. *See Mylan Pharma. Inc. v. Bayer Pharma Aktiengesellschaft*, IPR2022-00517, Paper 15, 8-9 (P.T.A.B. Aug. 9, 2022) (evaluating median time to trial for factor 2).

**Factor 3** strongly favors institution. By institution, neither the parties nor the DDE court will have invested significant resources in the litigation. The court

issued a scheduling order only on December 14, 2022, but the court has not issued any substantive rulings (e.g., claim construction, dispositive motion). Petitioner's diligence filing this Petition less than 7 months after the complaint, and long before Patent Owner's infringement contentions, confirm that factor 3 strongly favors institution.

**Factors 4 and 5** strongly favor institution. Petitioner stipulates that, if the Board institutes this Petition, Petitioner will not raise at trial in parallel litigation any Ground raised here. Petitioner's stipulation mitigates concerns for duplicating efforts and inconsistent conclusions.

**Factor 6** strongly favors institution. The Petition's merits are strong. *See* June 2022 Memo, 3-5. Additionally, under factor 6: (1) the Board is best suited to address the technical issues raised here; (2) a decision on the merits at institution may aid the parties in resolving their dispute; and (3) determining patentability will benefit the public, providing a complete record and rationale absent from a jury verdict form. Patent Owner has already sued at least 8 defendants and could potentially sue others in view of the accused technology.

Holistically, the *Fintiv* factors strongly favor institution.

### B. *Advanced Bionics* strongly favors institution.

The two-part framework from *Advanced Bionics, LLC v. MED-EL Elektromedizinische Geräte GmbH*, IPR2019-01469, Paper 6, 8-9 (P.T.A.B. Feb.

13, 2020) (precedential), demonstrates that denial under § 325(d) is not appropriate. Under Part 1, the same or substantially the same art or arguments were not previously presented to the Office, ending the inquiry in favor of institution. No references forming a Ground were applied or cited during the ’503 patent’s prosecution. The “new, noncumulative prior art” asserted here strongly favors institution. *Oticon Medical AB v. Cochlear Ltd.*, IPR2019-00975, Paper 15, 20 (P.T.A.B. Oct. 16, 2019) (§§ II.B, II.C precedential). If Patent Owner attempts to analogize any previously considered art or arguments to those presented here, Petitioner reserves the right to respond.

## XVI. MANDATORY NOTICES (37 C.F.R. § 42.8(A)(1))

### A. Real Party In Interest (37 C.F.R. § 42.8(b)(1))

The real party-in-interest is Petitioner Volkswagen Group of America, Inc., which is a subsidiary of Volkswagen AG.

### B. Related Matters (37 C.F.R. § 42.8(b)(2))

The ’503 patent is the subject of the following pending civil action: *Torchlight Techs. LLC v. Daimler AG et al.*, Civil No. 1:22-cv-00751 (D. Del.), filed June 7, 2022. Petitioner, Volkswagen Group of America, Inc., was voluntarily dismissed without prejudice from this civil action on September 23, 2022.

The ’503 patent claims the benefit of U.S. Patent Nos. 9,955,551 (“the ’551 patent”) and 8,100,552. The ’551 patent is also the subject of reissue number 16/858,342 and three *inter partes* review cases filed by Petitioner: IPR2023-00315

(filed December 9, 2022), IPR2023-00318 (filed December 22, 2022), and IPR2023-00336 (filed December 22, 2022).

U.S. Patent No. 11,208,029 ("the '029 patent") claims the benefit of the '503 patent. On October 3, 2022, Petitioner filed a petition for *inter partes* review of the related '029 patent (IPR2022-01586).

On November 30, 2022, Petitioner filed another petition for *inter partes* review, IPR2023-00197, against claims 20-25 and 59-64 of the '503 patent, and institution of both petitions is justified—the petitions address different claim groupings.

On December 16, 2022, Petitioner filed another petition for *inter partes* review, IPR2023-00328, against claims 26-36 and 65-70 of the '503 patent, and institution of both petitions is justified—the petitions address different claim groupings.

### C. Lead and Back-up Counsel (37 C.F.R. § 42.8(b)(3))

Pursuant to 37 C.F.R. §§ 42.8(b)(3) and 42.10(a), Petitioner appoints **Michael D. Specht** (Reg. No. 54,463) as lead counsel and **Jason A. Fitzsimmons** (Reg. No. 65,367) as first back-up counsel. Additionally, Petitioner appoints **Danny E. Yonan** (Reg. No. 53,812), **Brian G. Burke** (Reg. No. 75,349), and **Ian B. Soule** (Reg. No. 74,290) as additional back-up counsel, at the address: STERNE, KESSLER, GOLDSTEIN

& FOX P.L.L.C., 1100 New York Avenue, N.W., Washington, D.C., 20005, phone (202) 371-2600, and facsimile (202) 371-2540.

### D. Service Information (37 C.F.R. § 42.8(b)(4))

Petitioner consents to electronic service by email at the following addresses:

**mspecht-PTAB@sternekessler.com**

**jfitzsimmons-PTAB@sternekessler.com**

**dyonan-PTAB@sternekessler.com**

**bburke-PTAB@sternekessler.com**

**isoule-PTAB@sternekessler.com**

**PTAB@sternekessler.com**.

## XVII. CONCLUSION

Petitioner requests institution and a final written decision finding claims 1-19 and 37-58 unpatentable.

Respectfully submitted,

STERNE, KESSLER, GOLDSTEIN & FOX P.L.L.C.

/Michael D. Specht/

Michael D. Specht (Reg. No. 54,463)
Attorney for Petitioner
Volkswagen Group of America, Inc.

Date: December 23, 2022

1100 New York Avenue, N.W.
Washington, D.C. 20005-3934
(202) 371-2600

## CERTIFICATE OF COMPLIANCE WITH TYPE-VOLUME LIMITATION, TYPEFACE REQUIREMENTS, AND TYPE STYLE REQUIREMENTS

1. This Petition complies with the type-volume limitation of 14,000 words, comprising 13,929 words, excluding the parts exempted by 37 C.F.R. § 42.24(a).

2. This Petition complies with the general format requirements of 37 C.F.R. § 42.6(a) and has been prepared using Microsoft® Word 2016 in 14 point Times New Roman.

Respectfully submitted,

STERNE, KESSLER, GOLDSTEIN & FOX P.L.L.C.

/Michael D. Specht/

Michael D. Specht (Reg. No. 54,463)
Attorney for Petitioner
Volkswagen Group of America, Inc.

Date: December 23, 2022

1100 New York Avenue, N.W.
Washington, D.C. 20005-3934
(202) 371-2600

**CERTIFICATION OF SERVICE (37 C.F.R. §§ 42.6(e), 42.105(a))**

The undersigned hereby certifies that on December 23, 2022, true and correct copies of the foregoing **PETITION FOR INTER PARTES REVIEW OF U.S. PATENT NO. 10,894,503**, Petitioner's Power of Attorney, and all associated exhibits were served in their entireties on the following parties via FedEx Express®:

BROOKS KUSHMAN P.C.
1000 Town Center, 22nd Floor
Southfield, Michigan 48075
*PAIR Correspondence Address for U.S. Pat. No.: 10,894,503*

Respectfully Submitted,

STERNE, KESSLER, GOLDSTEIN & FOX P.L.L.C.

/Michael D. Specht/

Michael D. Specht (Reg. No. 54,463)
Attorney for Petitioner
Volkswagen Group of America, Inc.

Date: December 23, 2022

1100 New York Avenue, N.W.
Washington, D.C. 20005-3934
(202) 371-2600
19240902.docx

# Appendix A

| Claim 1 | Claim 37[28] |
|---|---|
| [1.P] A vehicle headlight system comprising: | [37.P] identical to [1.P] |
| [1.1] one or more headlamps and a vehicle structure, arranged for affixing components of the system to the vehicle; | [37.1] one or more headlamps affixable to a first vehicle; |
| [1.2] a plurality of light clusters, arranged in each of the one or more of the one or more headlamps, | [37.2] a plurality of light clusters arranged in each of the one or more of the headlamps and |
| [1.3] the headlamps capable of projecting light so as to illuminate a plurality of sub-sections of a field-of-view with different illumination characteristics, | [37.3] capable of illuminating sub-sections of a field-of-view with different illumination characteristics, |
| [1.4] the subsections determined in response to sensor data, wherein the light clusters operate to create a headlight beam; | [37.4] wherein at least two of the light clusters operate to create a headlight beam; |
| [1.5] electronic control circuitry configured to independently operate the light clusters; | |
| [1.6] one or more sensors configured to obtain and provide the sensor data predefined as pertinent to illumination requirements for the field-of-view; and | [37.5] one or more sensors configured to obtain and provide sensor data,<br>[37.6] at least a portion of the sensor data indicating a second vehicle within the field-of-view; and |

[28] Petitioner demonstrates the unpatentability of elements [37.P]-[37.7] and [37.10] of claim 37 by showing that claim 1 is unpatentable.

| | |
|---|---|
| [1.7] a logical controller including a processor, the processor in communication with a memory storing one or more algorithms, with the sensors, and with the control circuitry, | |
| [1.8] wherein the processor is configured to process the one or more algorithms and the sensor data to determine an illumination for at least two of the sub-sections, | [37.7] at least one processor configured to: receive the sensor data; process the sensor data to determine a light distribution pattern for an adaptive headlight beam, |
| [1.9] that reduces illumination to reduce glare in at least a first of the at least two subsections and | |
| | [37.8] such that a headlight beam adapted to the pattern substantially illuminates a first subsection of the field-of-view including at least a portion of the second vehicle with an illuminance below a predefined threshold value, |
| | [37.9] while the beam substantially illuminates at least the one or more second subsections of the field-of-view to either side of the first subsection with an illuminance above the predefined threshold value; and |
| [1.10] adapt the light emitted from one or more of the light-clusters so as to create the headlight beam that provides the determined illumination. | [37.10] instruct operation of at least two of the light clusters to create the adapted headlight beam. |

EX1001, 95:40-65, 100:3-28 (numbering and spacing added).

# Appendix B

Claim listing:

| Claim: | Limitation: | Claim Language: |
|---|---|---|
| Claim 1 | [1.P] | A vehicle headlight system comprising: |
| | [1.1] | one or more headlamps and a vehicle structure, arranged for affixing components of the system to the vehicle; |
| | [1.2] | a plurality of light clusters, arranged in each of the one or more of the one or more headlamps, |
| | [1.3] | the headlamps capable of projecting light so as to illuminate a plurality of sub-sections of a field-of-view with different illumination characteristics, |
| | [1.4] | the subsections determined in response to sensor data, wherein the light clusters operate to create a headlight beam; |
| | [1.5] | electronic control circuitry configured to independently operate the light clusters; |
| | [1.6] | one or more sensors configured to obtain and provide the sensor data predefined as pertinent to illumination requirements for the field-of-view; and |
| | [1.7] | a logical controller including a processor, the processor in communication with a memory storing one or more algorithms, with the sensors, and with the control circuitry, |
| | [1.8] | wherein the processor is configured to process the one or more algorithms and the sensor data to determine an illumination for at least two of the sub-sections, |
| | [1.9] | that reduces illumination to reduce glare in at least a first of the at least two subsections and |

| | | |
|---|---|---|
| | [1.10] | adapt the light emitted from one or more of the light-clusters so as to create the headlight beam that provides the determined illumination. |
| Claim 2 | [2.1] | The headlight system of claim 1, wherein at least one of the light clusters comprises: a structure to position the light cluster, such that the projected light from the at least one cluster has an aiming direction in relation to a forward travel direction of the vehicle; |
| | [2.2] | one or more light emitting sources, each having a variable light-source characteristic dependent on power, and wherein the control circuitry is arranged to alter said light-source characteristic via power control; and |
| | [2.3] | one or more light modifying elements provided in the path of light emitted from at least one of the sources, further controlling the light-source characteristics; |
| | [2.4] | wherein the structure combined with control of the light sources and light modifying elements results in an emitted light-cluster light characteristic including at least one of direction, intensity, beam spread, spatial light distribution or spectral light distribution. |
| Claim 3 | - | The headlight system of claim 2, wherein the one or more light modifying elements is at least one of a static light modifier or a variable light modifier, said light modifying element comprising at least one of reflectors or refractors, and wherein variable light modifier control circuitry is configured to control the light-cluster light characteristic by altering the light modifying elements in the path of the light emitted from the at least one of the light sources. |

| | | |
|---|---|---|
| Claim 4 | - | The headlight system of claim 2, wherein the light modifying element further comprises at least one of lenses, diffractors, optical devices, a light guide, filters, phosphors, optical coatings, prisms, controllable piezoelectric light guides, MEMS devices, light valves or optical switches. |
| Claim 5 | - | The headlight system of claim 1, wherein at least one of the light-clusters includes: a plurality of light sources, wherein one or more of the plurality of light sources comprises at least one of multiple light-emitting-diodes (LEDs) or organic light-emitting-diodes, each light source having a spectral power distribution characteristic and wherein the control circuitry is configured to alter the overall light-cluster spectral power distribution to illuminate at least one of the at least two sub-sections of the field-of-view with a different color of light from another of the at least two sub-sections. |
| Claim 6 | - | The headlight system of claim 1, wherein the headlight beam further comprises light in at least one of infra-red (IR) or ultra-violet (UV) wavelengths. |
| Claim 7 | - | The headlight system of claim 1, wherein at least one of the sensors is a camera-sensor configured to image at least lights indicative of oncoming vehicles having a driver whose vision could be disturbed by the headlight beam, and wherein the logical controller upon receiving data, indicating a position of the lights, from the camera-sensor, is configured to use one or more of the algorithms to determine a position of the oncoming vehicle, based on the position of the lights as indicated by the data, relative to the vehicle headlight system and responsively adapt the headlight beam to decrease at least one vision-disturbing characteristic to the oncoming vehicle driver. |

| | | |
|---|---|---|
| Claim 8 | - | The headlight system of claim 1, wherein at least one of the sensors is a camera-sensor configured to image at least lights indicative of preceding vehicles having a driver whose vision could be disturbed by the headlight beam reflected in a mirror, and where the logical controller upon receiving data, indicating a position of the lights, from the camera-sensor, is configured to use one or more of the algorithms to determine a position of the preceding vehicle, based on the position of the lights as indicated by the data, relative to the vehicle headlight system and responsively adapt the headlight beam to decrease at least one vision-disturbing characteristic to the driver of the preceding vehicle. |
| Claim 9 | - | The headlight system of claim 1, wherein the one or more sensors includes a GPS sensor. |
| Claim 10 | - | The headlight system of claim 1, wherein at least one of the sensors is configured to detect at least one of oncoming headlights or preceding taillights. |
| Claim 11 | - | The headlight system of claim 1, further including a computer vison processing unit configured to use the sensor data and one or more of the algorithms to identify entities including at least one of beings, vehicles, roadway, or street signs and wherein the logical controller is further configured to modify the headlight beam to change illumination of the identified entity. |
| Claim 12 | - | The headlight system of claim 1, where the determined illumination results in creation of a headlight beam providing a driver of the vehicle including said headlight system with higher visibility in at least a second of the at least two subsections relative to the first of the at least two subsections, while mitigating glaring illumination projected to reach the eyes of at least one of other |

| | | |
|---|---|---|
| | | drivers or pedestrians in the first of the at least two subsections, based on detected other vehicles or pedestrians in the first of the at least two subsections as indicated by the sensor data. |
| Claim 13 | - | The headlight system of claim 1, wherein the required illumination continues to provide high-beam illumination in at least a second of the subsections different from the first of the subsections, without diminishing a range of the high-beam illumination. |
| Claim 14 | - | The headlight system of claim 1, wherein the one or more sensors further includes at least one of a camera, a microphone, an ultrasonic transducer and receiver, or an electromagnetic radiation source and detector including any of IR, UV, laser, or light. |
| Claim 15 | - | The system of claim 1, wherein the logical controller is further configured to determine at least a road curvature, indicated by the sensor data, ahead of the vehicle and wherein the required illumination includes increasing illumination in a direction of the road curvature. |
| Claim 16 | - | The system of claim 15, wherein the logical controller is further configured to determine at least a planned upcoming turn, indicated by the sensor data, and wherein the required illumination includes increasing illumination illuminating the turn. |
| Claim 17 | - | The system of claim 1, wherein the logical controller is further configured to determine at least a planned upcoming turn, indicated by the sensor data, and wherein the required illumination includes increasing illumination illuminating the turn. |
| Claim 18 | - | The system of claim 1, wherein at least one light source provided to at least one headlamp includes a |

| | | |
|---|---|---|
| | | laser diode. |
| Claim 19 | - | The system of claim 1, wherein at least one of the one or more headlamps further includes at least one of reflectors, refractors, or lenses usable to alter emitted light from at least one of the light clusters. |
| Claim 37 | [37.P] | A vehicle headlight system comprising: |
| | [37.1] | one or more headlamps affixable to a first vehicle; |
| | [37.2] | a plurality of light clusters arranged in each of the one or more of the headlamps and |
| | [37.3] | capable of illuminating sub-sections of a field-of-view with different illumination characteristics, |
| | [37.4] | wherein at least two of the light clusters operate to create a headlight beam; |
| | [37.5] | one or more sensors configured to obtain and provide sensor data, |
| | [37.6] | at least a portion of the sensor data indicating a second vehicle within the field-of-view; and |
| | [37.7] | at least one processor configured to: receive the sensor data; process the sensor data to determine a light distribution pattern for an adaptive headlight beam, |
| | [37.8] | such that a headlight beam adapted to the pattern substantially illuminates a first subsection of the field-of-view including at least a portion of the second vehicle with an illuminance below a predefined threshold value, |
| | [37.9] | while the beam substantially illuminates at least the one or more second subsections of the field-of-view to either side of the first subsection with an illuminance above the predefined threshold value; and |

| | | |
|---|---|---|
| | [37.10] | instruct operation of at least two of the light clusters to create the adapted headlight beam. |
| Claim 38 | - | The headlight system of claim 37, wherein at least one of the at least one processors is further configured to process the sensor data to determine illumination for at least one first subsection of the field-of-view, determined to include at least a portion of the second vehicle, based on the sensor data, and for at least one second subsection determined not to include the second vehicle, based on the sensor data. |
| Claim 39 | - | The headlight system of claim 37, wherein the plurality of light clusters are further capable of illuminating at least two of the sub-sections with different illumination characteristics based on the at least one processor determining specific, different illumination characteristics for each of the at least two sub-sections. |
| Claim 40 | - | The headlight system of claim 37, wherein the light distribution pattern defines illumination for at least the first and the one or more second sub-sections of the field of view. |
| Claim 41 | - | The headlight system of claim 37, wherein the light distribution patterns defines illumination for the first subsection designed to result in an illuminance below the predefined threshold value, and defines illumination for the one or more second subsections designed to result in an illuminance above the predefined threshold value. |
| Claim 42 | [42.1] | The headlight system of claim 37, wherein at least one of the light clusters comprises: |
| | [42.2] | one or more light sources, each having a variable light-source light characteristic dependent on power and alterable, at least responsive to instructions from at least one of the at least one |

| | | |
|---|---|---|
| | | processors, via power control; and |
| | [42.3] | one or more light modifying elements provided in a path of light emitted from at least one of the light sources, further controlling at least one light characteristic of the at least one of the light source; |
| | [42.4] | wherein control of the light sources and light modifying elements results in a specified emitted light-source light characteristic, where said emitted light-source light characteristic includes at least one of direction, intensity, beam spread, spatial light distribution or spectral light distribution. |
| Claim 43 | - | The headlight system of claim 42, wherein the one or more light modifying elements comprises at least one of reflectors or refractors, and wherein at least one of the at least one processors is configured to instruct control of at least one light modifying element resulting in a change to the light-source light characteristic. |
| Claim 44 | - | The headlight system of claim 42, wherein the light modifying element further comprises at least one of lenses, diffractors, optical devices, a light guide, filters, phosphors, optical coatings, prisms, controllable piezoelectric light guides, MEMS devices, light valves or optical switches. |
| Claim 45 | - | The headlight system of claim 37, wherein at least one of the light-clusters includes: a plurality of light sources, wherein one or more light sources of the plurality of light sources comprise at least one of light-emitting-diodes (LEDs) or organic light-emitting-diodes, each light source having a spectral power distribution characteristic alterable, at least responsive to instructions from at least one of the at least one processors, by modifying power to the one or more light sources of the plurality of light sources, resulting in a color change to projected light from the at least one light-cluster illuminating |

| | | |
|---|---|---|
| | | at least one sub-section of the field-of-view. |
| Claim 46 | - | The headlight system of claim 37, wherein the light output from at least one headlamp further comprises at least one of infrared or ultraviolet wavelengths. |
| Claim 47 | - | The headlight system of claim 37, wherein at least one of the sensors is a camera-sensor configured to image at least lights indicative of an oncoming vehicle. |
| Claim 48 | - | The headlight system of claim 37, wherein at least one of the sensors is a camera-sensor configured to image at least lights indicative of a preceding vehicle. |
| Claim 49 | - | The headlight system of claim 37, wherein the one or more sensors further includes a GPS sensor. |
| Claim 50 | - | The headlight system of claim 37, further including a computer vision processing unit configured to use the sensor data to identify entities including at least one of beings, vehicles, roadway, or street signs, and wherein the processor is further configured to determine modification of the headlight beam to change illumination of the identified entity. |
| Claim 51 | - | The headlight system of claim 37, where the illumination created by the headlight beam results in illumination both providing a driver of the first vehicle with preserved illumination in the one or more second subsections and mitigating glare projected to reach the eyes of a driver of the second vehicle. |
| Claim 52 | - | The headlight system of claim 37, wherein the adapted headlight beam continues to provide high-beam illumination in the one or more second of the subsections without diminishing a range of the high-beam illumination. |

| | | |
|---|---|---|
| Claim 53 | - | The headlight system of claim 37, wherein the one or more sensors further includes at least one of a camera, a microphone, an ultrasonic transducer and receiver, or an electromagnetic radiation source and detector including any of IR, UV, laser, or light. |
| Claim 54 | - | The headlight system of claim 37, wherein at least one of the at least one processors is further configured to determine at least a road curvature, indicated by the sensor data, ahead of the first vehicle and to determine a second illumination pattern defining increased illumination in a direction of the road curvature. |
| Claim 55 | - | The headlight system of claim 54, wherein at least one of the at least one processors is further configured to determine at least a planned upcoming turn, indicated by the sensor data, and to determine a third illumination pattern defining increased illumination illuminating the turn. |
| Claim 56 | - | The headlight system of claim 37, wherein at least one of the at least one processors is further configured to determine at least a planned upcoming turn, indicated by the sensor data, and to determine a third illumination pattern defining increased illumination illuminating the turn. |
| Claim 57 | - | The headlight system of claim 37, wherein at least one light source provided to at least one headlamp includes a laser diode. |
| Claim 58 | - | The headlight system of claim 37, wherein at least one of the one or more headlamps further includes at least one of reflectors, refractors, or lenses usable to alter emitted light from at least one of the light clusters as part of the instructed operation. |

# Appendix C

| Claim 2 | Claim 4[29] |
|---|---|
| [2.1] The headlight system of claim 1, wherein at least one of the light clusters comprises: a structure to position the light cluster, such that the projected light from the at least one cluster has an aiming direction in relation to a forward travel direction of the vehicle; | [42.1] The headlight system of claim 37, wherein at least one of the light clusters comprises: |
| [2.2] one or more light emitting sources, each having a variable light-source characteristic dependent on power, and wherein the control circuitry is arranged to alter said light-source characteristic via power control; and | [42.2] one or more light sources, each having a variable light-source light characteristic dependent on power and alterable, at least responsive to instructions from at least one of the at least one processors, via power control; and |
| [2.3] one or more light modifying elements provided in the path of light emitted from at least one of the sources, further controlling the light-source characteristics; | [42.3] one or more light modifying elements provided in a path of light emitted from at least one of the light sources, further controlling at least one light characteristic of the at least one of the light source; |
| [2.4] wherein the structure combined with control of the light sources and light modifying elements results in an emitted light-cluster light characteristic including at least one of direction, intensity, beam spread, spatial light distribution or spectral light distribution. | [42.4] wherein control of the light sources and light modifying elements results in a specified emitted light-source light characteristic, where said emitted light-source light characteristic includes at least one of direction, intensity, beam spread, spatial light distribution or spectral light distribution. |

EX1001, 95:66-96:17, 100:51-67 (numbering and spacing added).

[29] Petitioner demonstrates the unpatentability of elements [42.1]-[42.4] of claim 42 by showing that claim 2 is unpatentable.