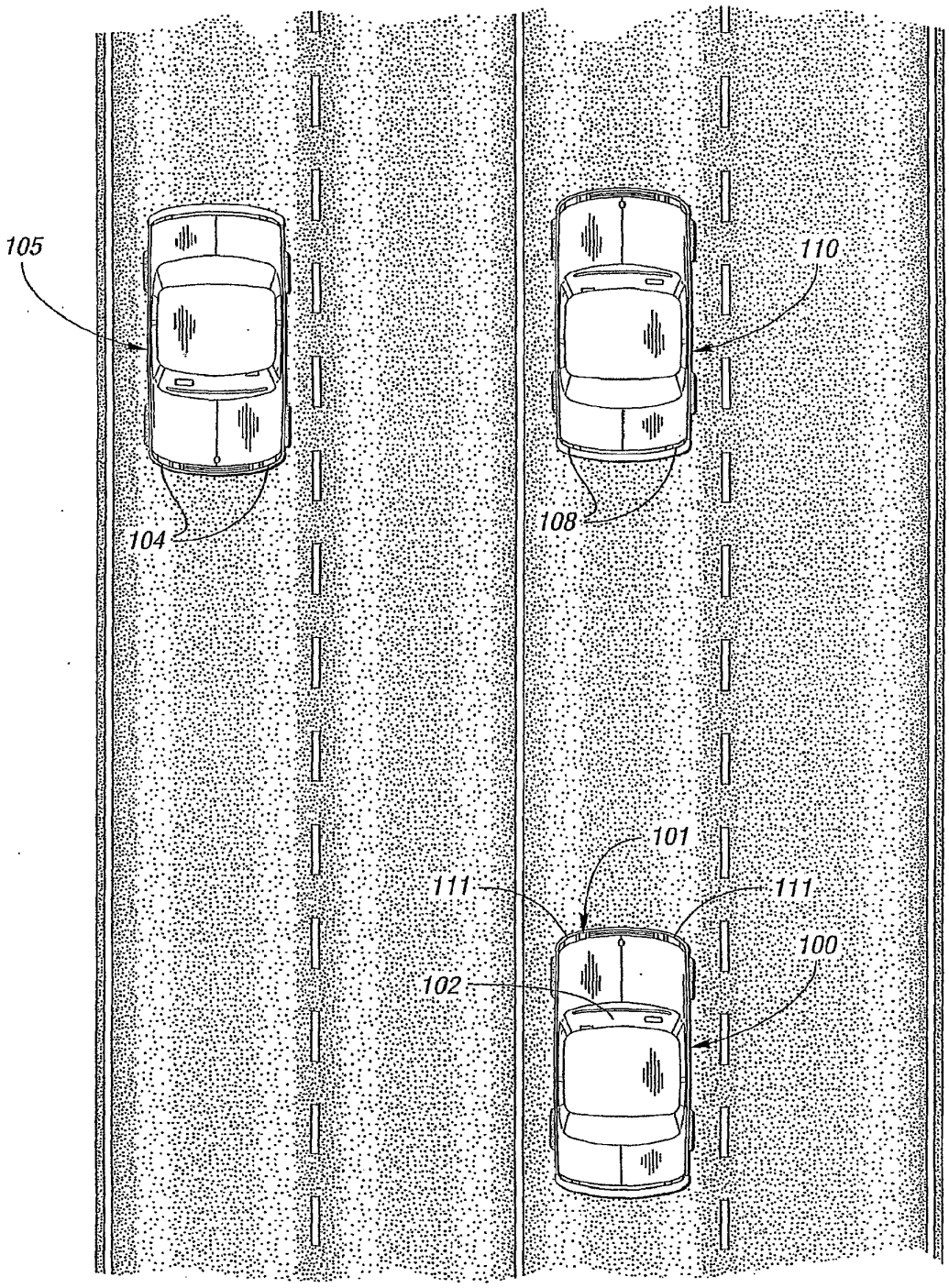

Fig. 1

VWGoA EX1012 (Part 2 of 3)
U.S. Patent No. 9,955,551

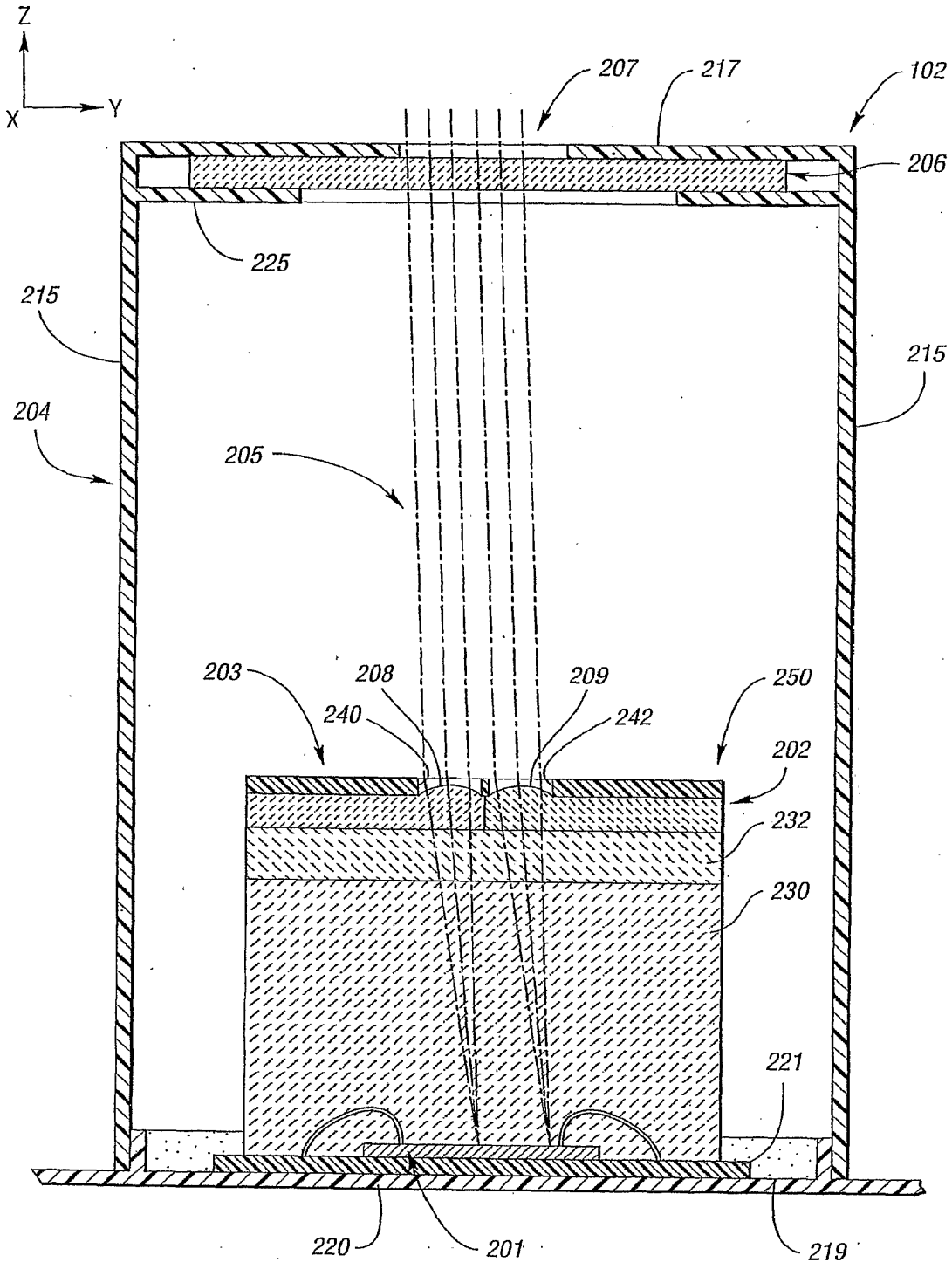
Z
X
Y
207
217
102
206
225
215
215
204
205
203
208
209
250
240
242
202
232
230
221
220
201
219

Fig. 2a

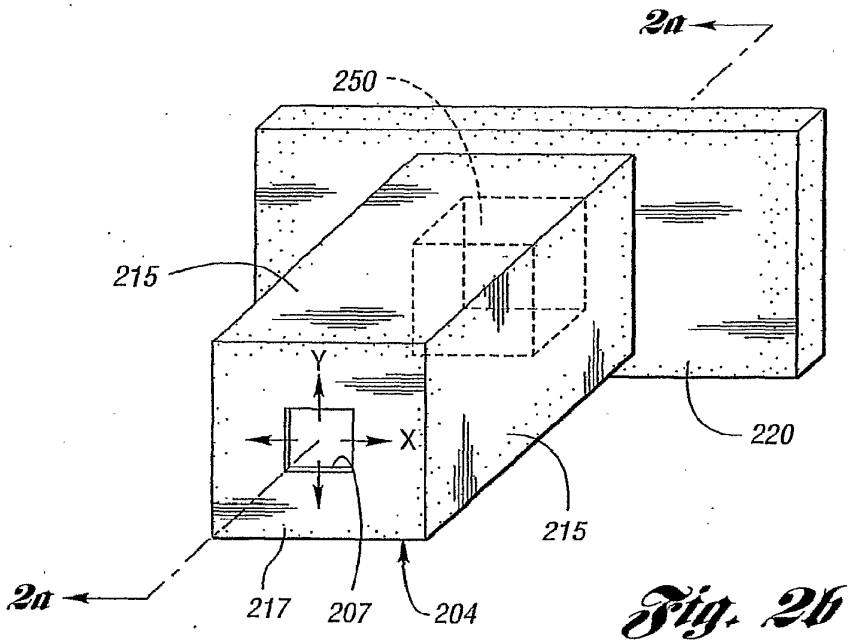
2a
250
215
Y
X
220
215
2a
217
207
204

Fig. 2b

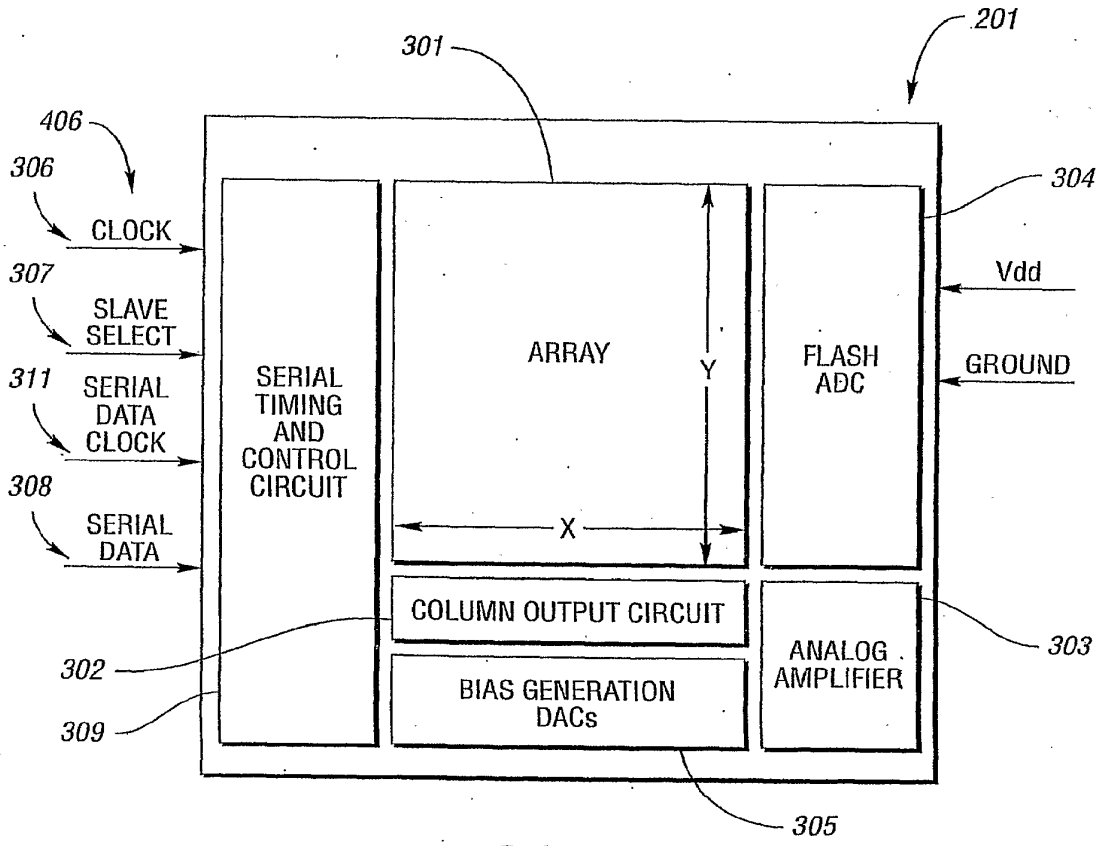
201
301
406
306
CLOCK
307
SLAVE SELECT
311
SERIAL DATA CLOCK
308
SERIAL DATA
SERIAL TIMING AND CONTROL CIRCUIT
ARRAY
Y
X
FLASH ADC
304
Vdd
GROUND
COLUMN OUTPUT CIRCUIT
BIAS GENERATION DACs
ANALOG AMPLIFIER
303
302
309
305

Fig. 3

Fig. 4

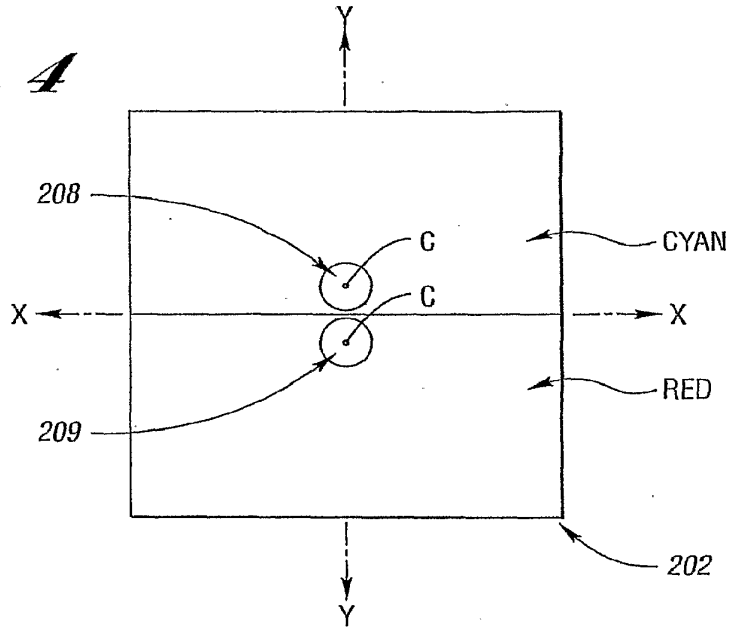

Fig. 5

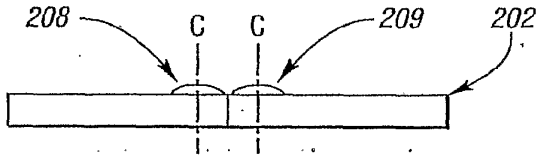

Fig. 6

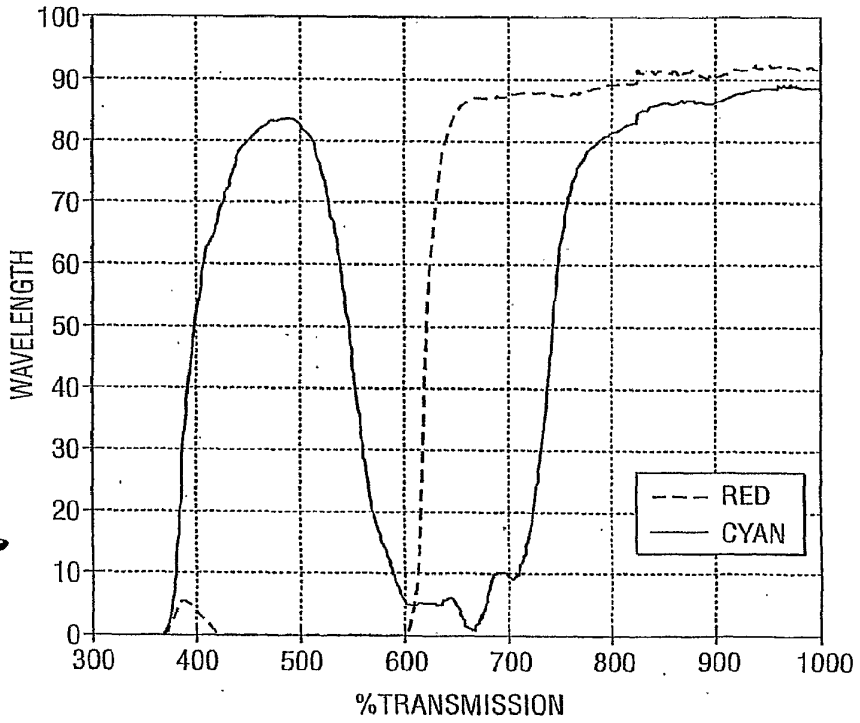

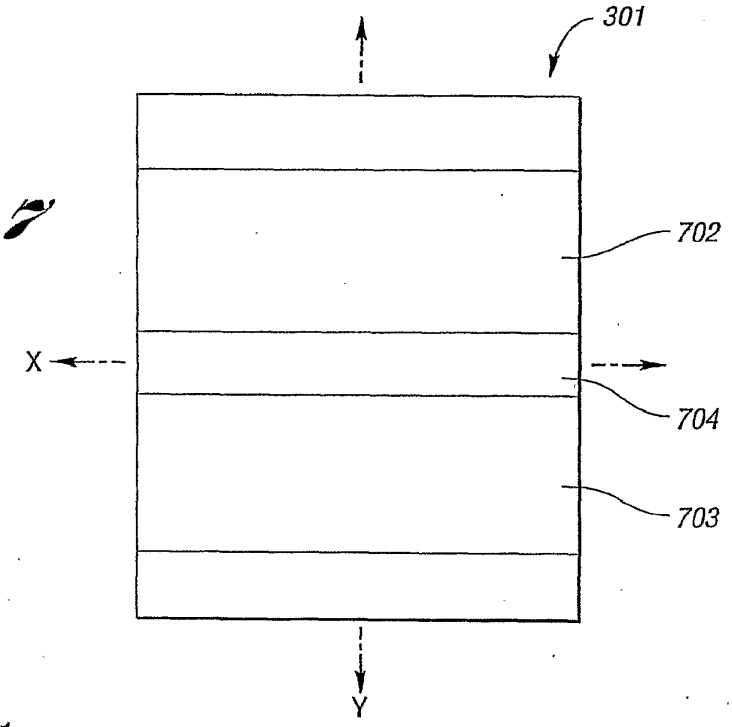
301
702
X
704
703
Y

Fig. 7

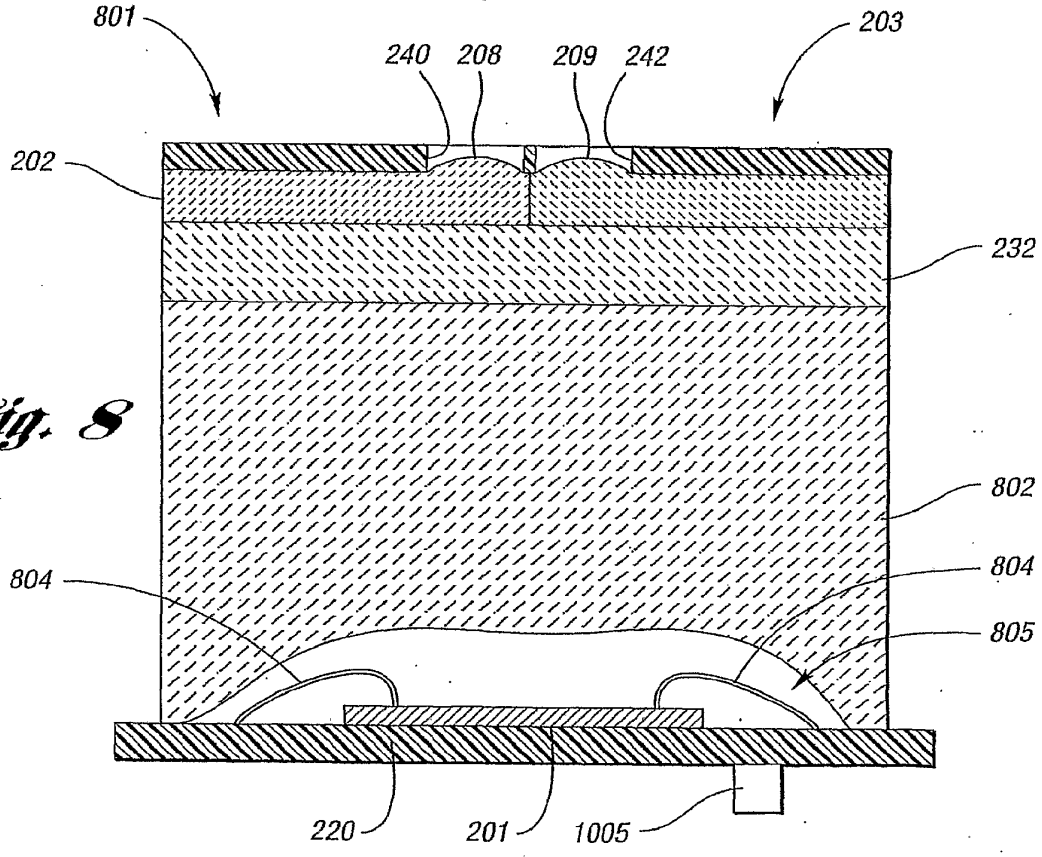
801
240
208
209
242
203
202
232
802
804
804
805
220
201
1005

Fig. 8

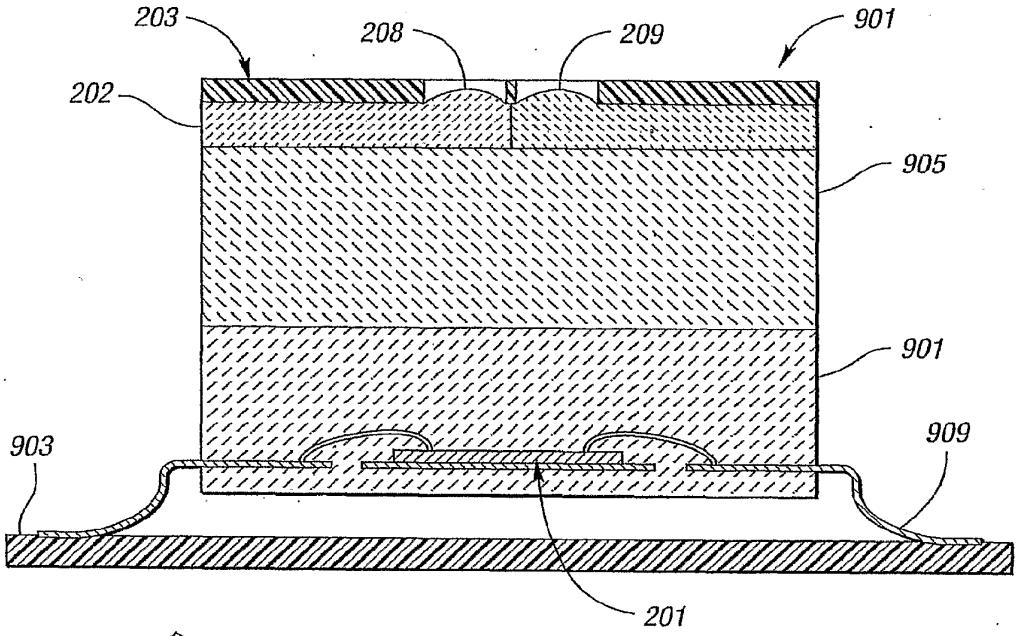
203
208
209
901
202
905
901
903
909
201

Fig. 9

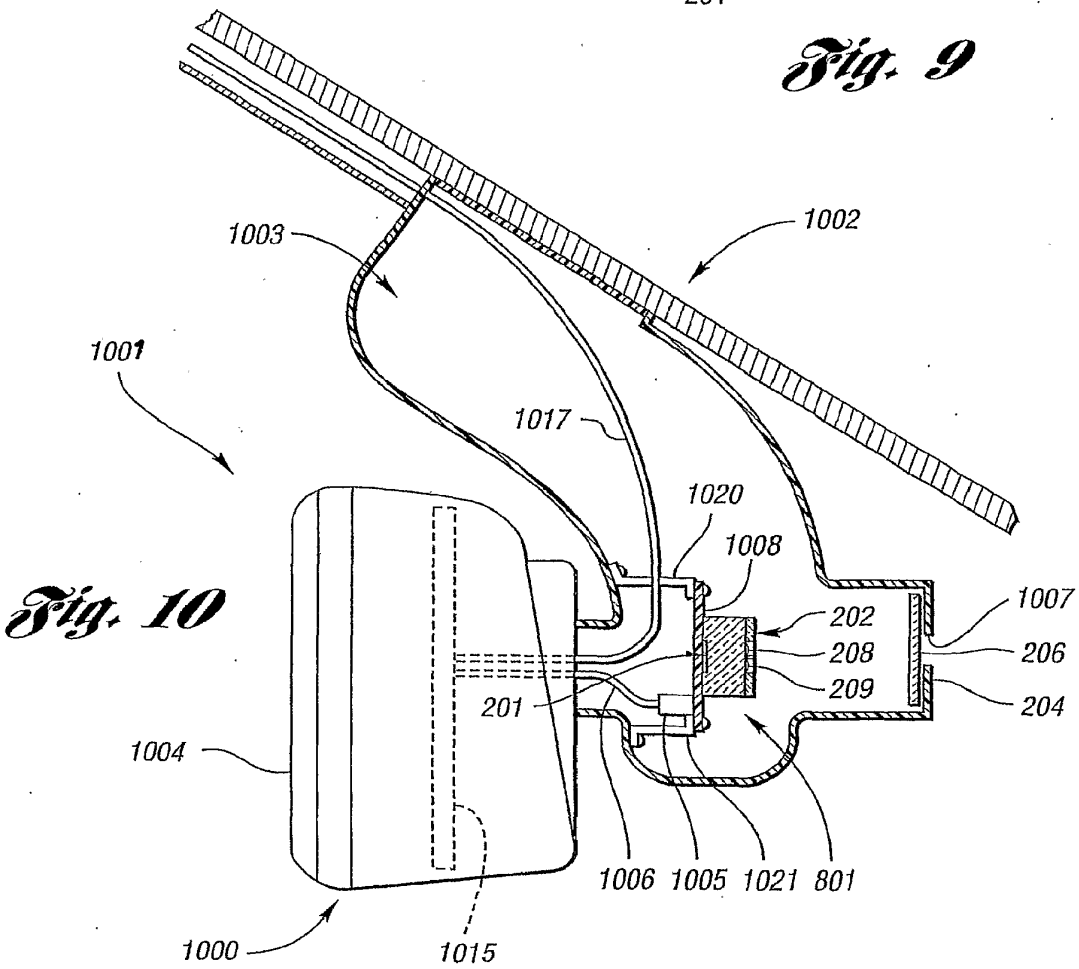
1002
1003
1001
1017
1020
1008
202
208
209
201
1007
206
204
1004
1006
1005
1021
801
1000
1015

Fig. 10

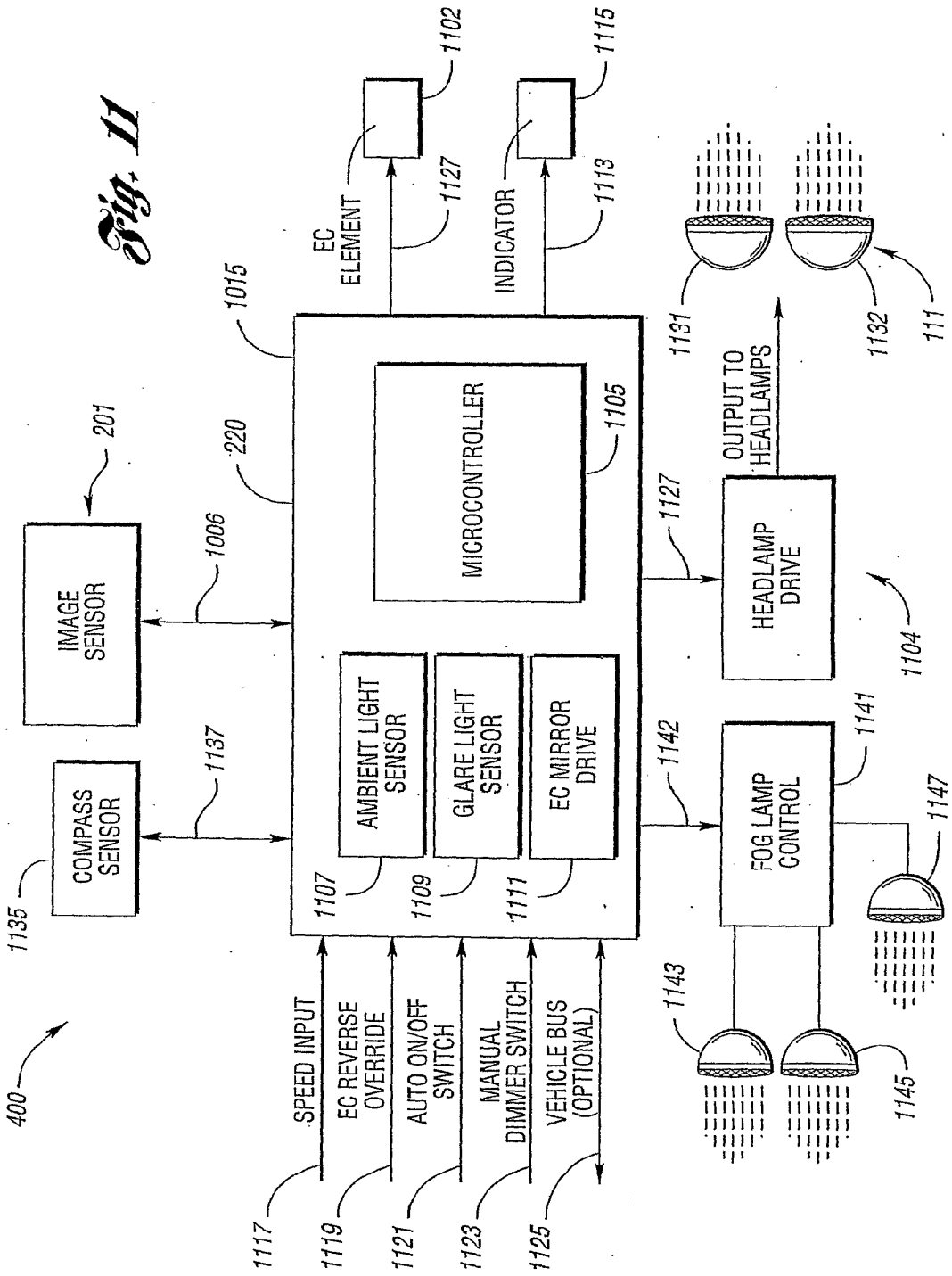
400
201
IMAGE SENSOR
1006
COMPASS SENSOR
1137
1135
220
1015
MICROCONTROLLER
1105
AMBIENT LIGHT SENSOR
GLARE LIGHT SENSOR
EC MIRROR DRIVE
1107
1109
1111
EC ELEMENT
1102
1127
INDICATOR
1115
1113
SPEED INPUT
EC REVERSE OVERRIDE
AUTO ON/OFF SWITCH
MANUAL DIMMER SWITCH
VEHICLE BUS (OPTIONAL)
1117
1119
1121
1123
1125
HEADLAMP DRIVE
1104
OUTPUT TO HEADLAMPS
1131
1132
111
FOG LAMP CONTROL
1141
1142
1143
1145
1147

Fig. 11

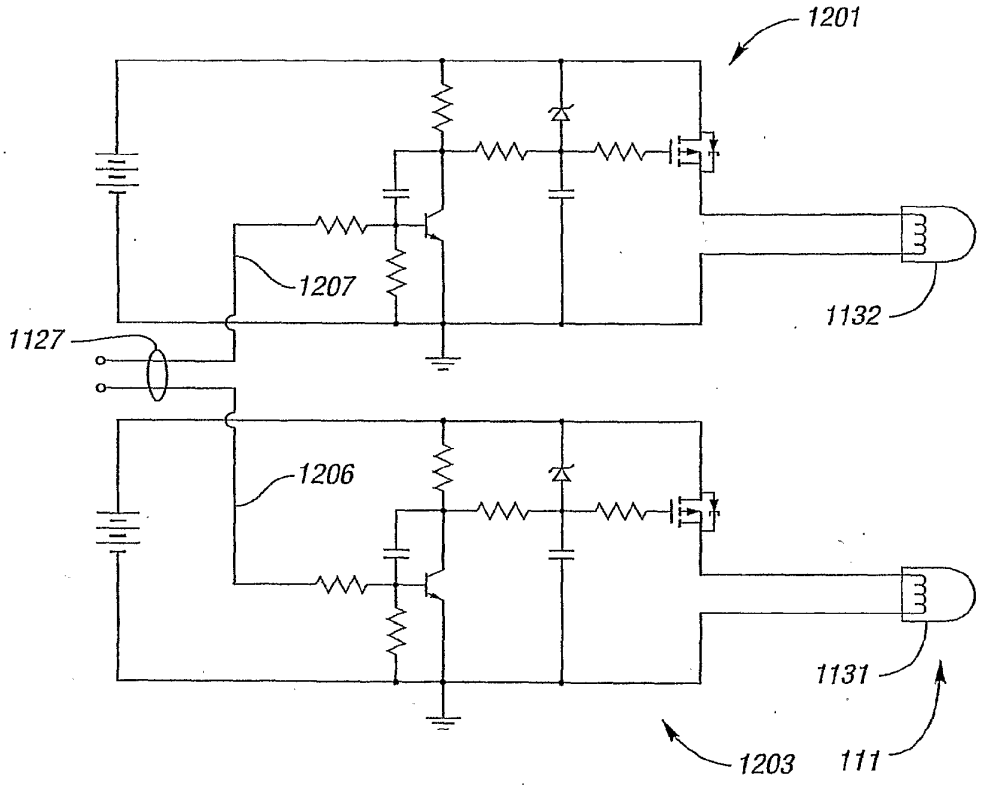

Fig. 12

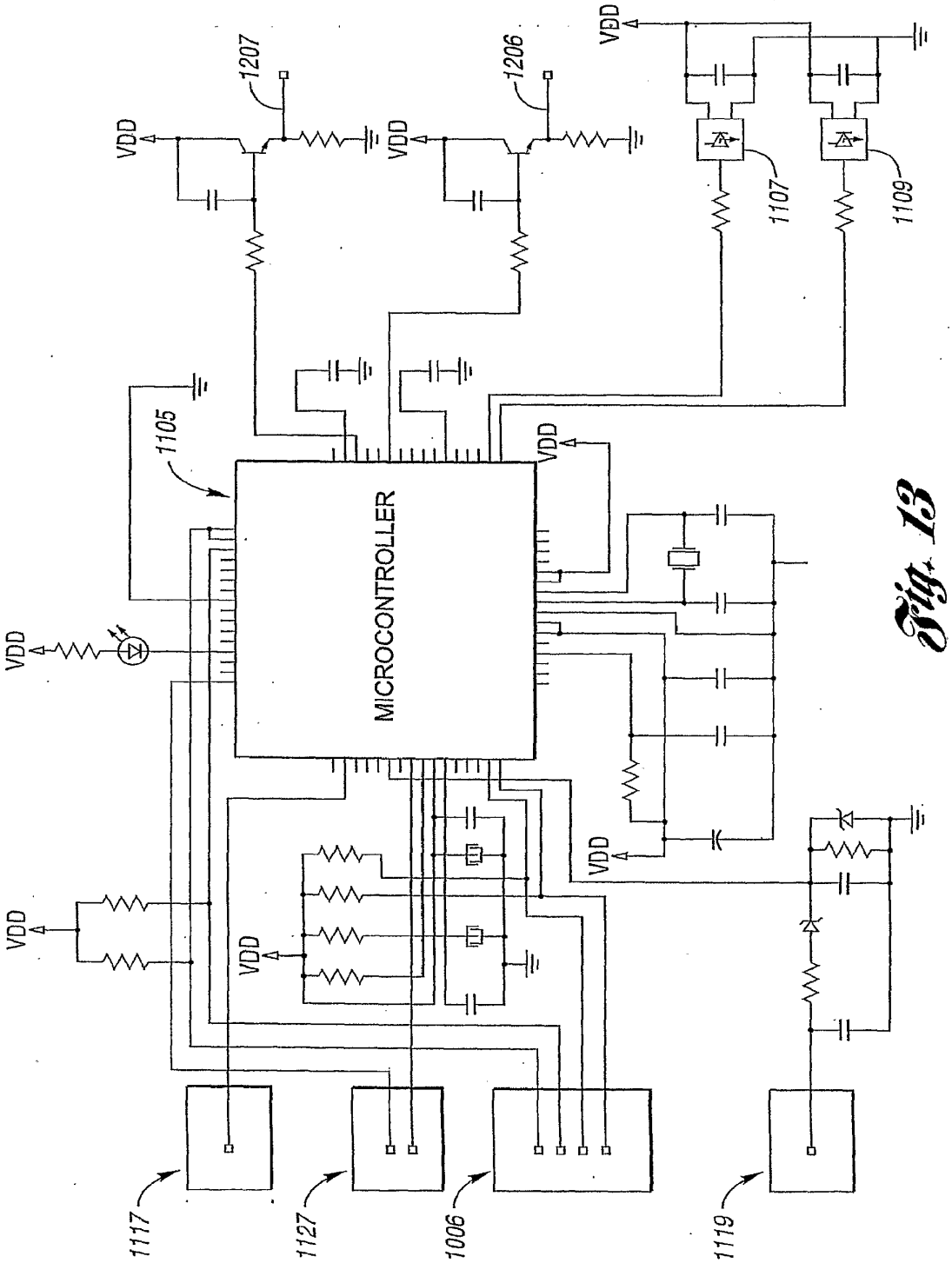
VDD
1207
1206
1107
1109
1105
MICROCONTROLLER
1117
1127
1006
1119

Fig. 13

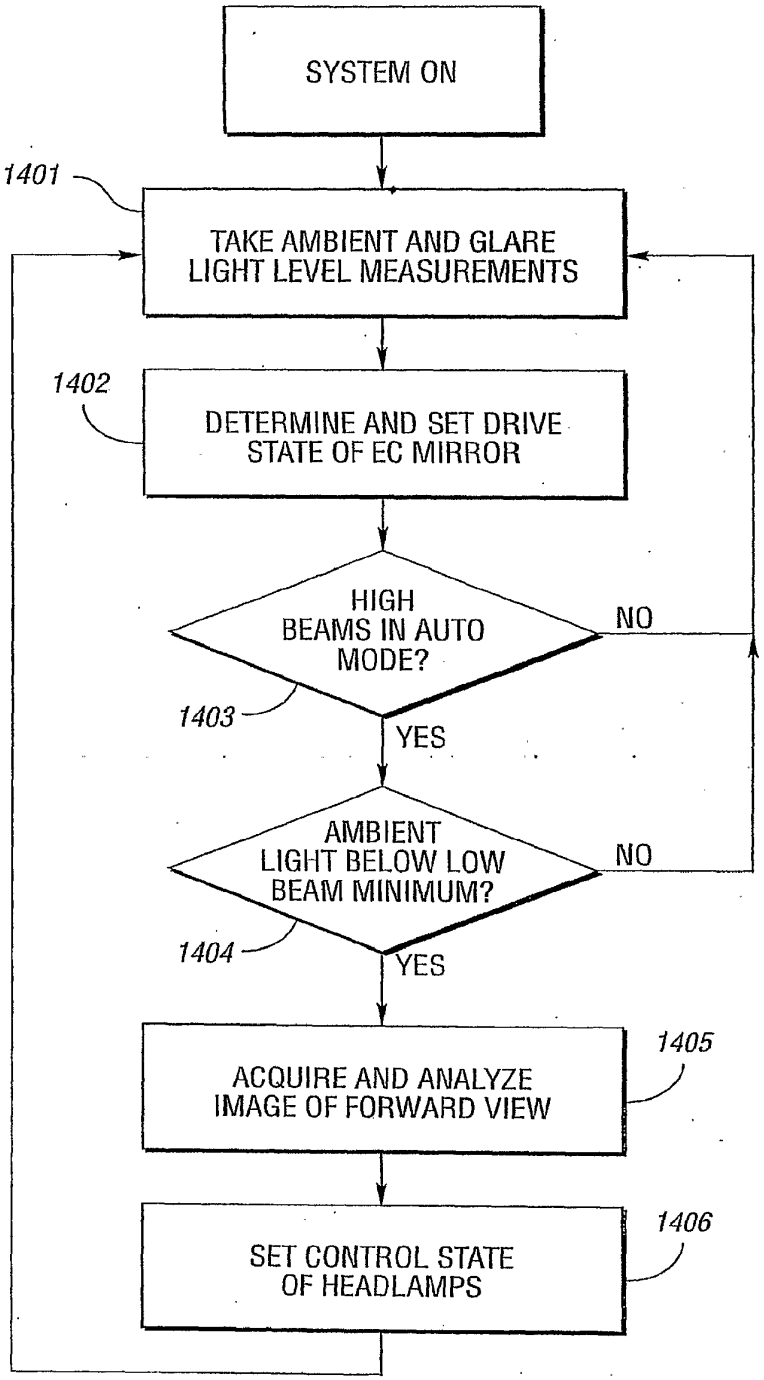
SYSTEM ON
1401
TAKE AMBIENT AND GLARE LIGHT LEVEL MEASUREMENTS
1402
DETERMINE AND SET DRIVE STATE OF EC MIRROR
HIGH BEAMS IN AUTO MODE?
NO
1403
YES
AMBIENT LIGHT BELOW LOW BEAM MINIMUM?
NO
1404
YES
1405
ACQUIRE AND ANALYZE IMAGE OF FORWARD VIEW
1406
SET CONTROL STATE OF HEADLAMPS

Fig. 14

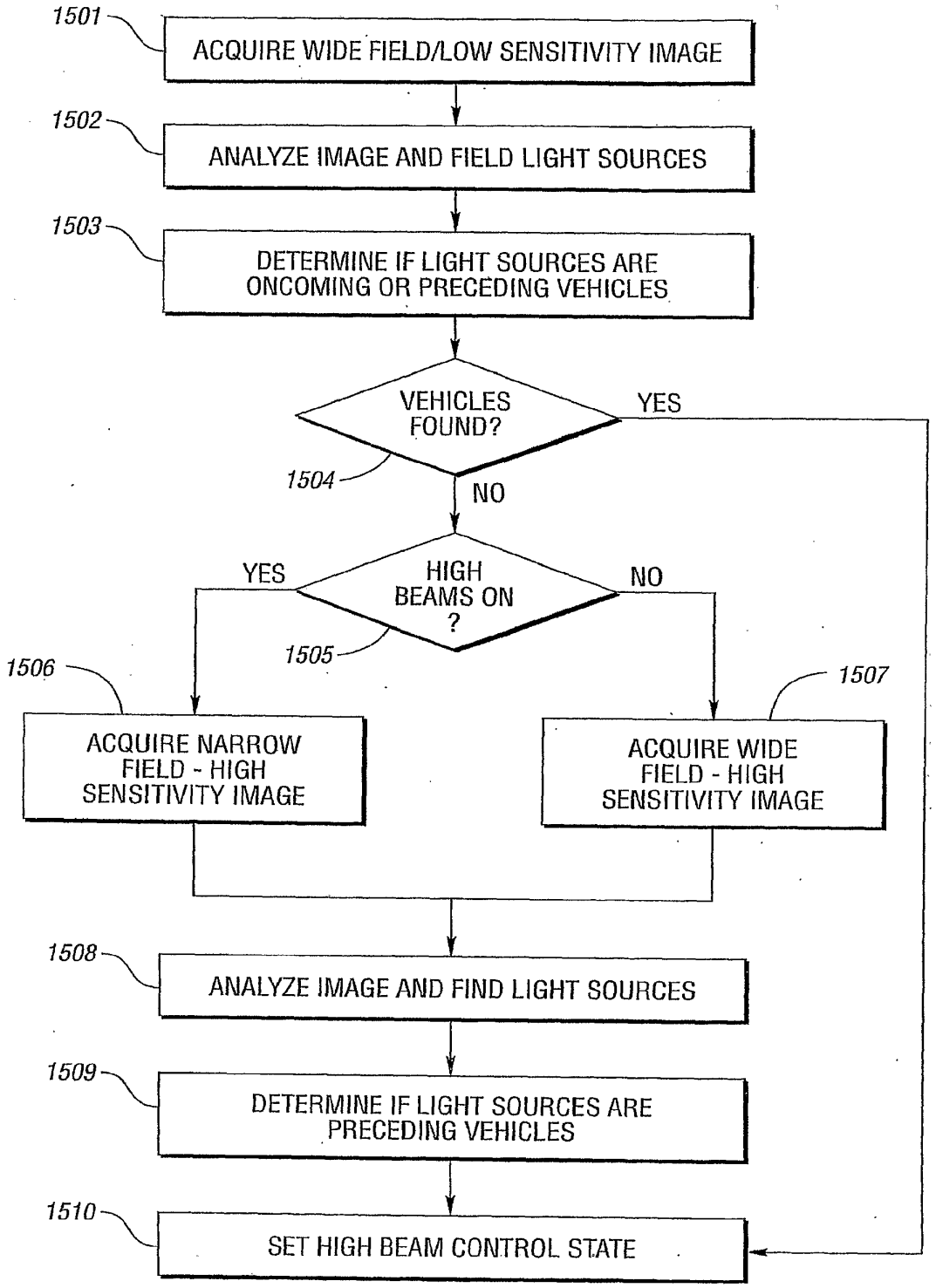
1501
ACQUIRE WIDE FIELD/LOW SENSITIVITY IMAGE
1502
ANALYZE IMAGE AND FIELD LIGHT SOURCES
1503
DETERMINE IF LIGHT SOURCES ARE ONCOMING OR PRECEDING VEHICLES
VEHICLES FOUND?
YES
1504
NO
YES
HIGH BEAMS ON ?
NO
1505
1506
1507
ACQUIRE NARROW FIELD - HIGH SENSITIVITY IMAGE
ACQUIRE WIDE FIELD - HIGH SENSITIVITY IMAGE
1508
ANALYZE IMAGE AND FIND LIGHT SOURCES
1509
DETERMINE IF LIGHT SOURCES ARE PRECEDING VEHICLES
1510
SET HIGH BEAM CONTROL STATE

Fig. 15

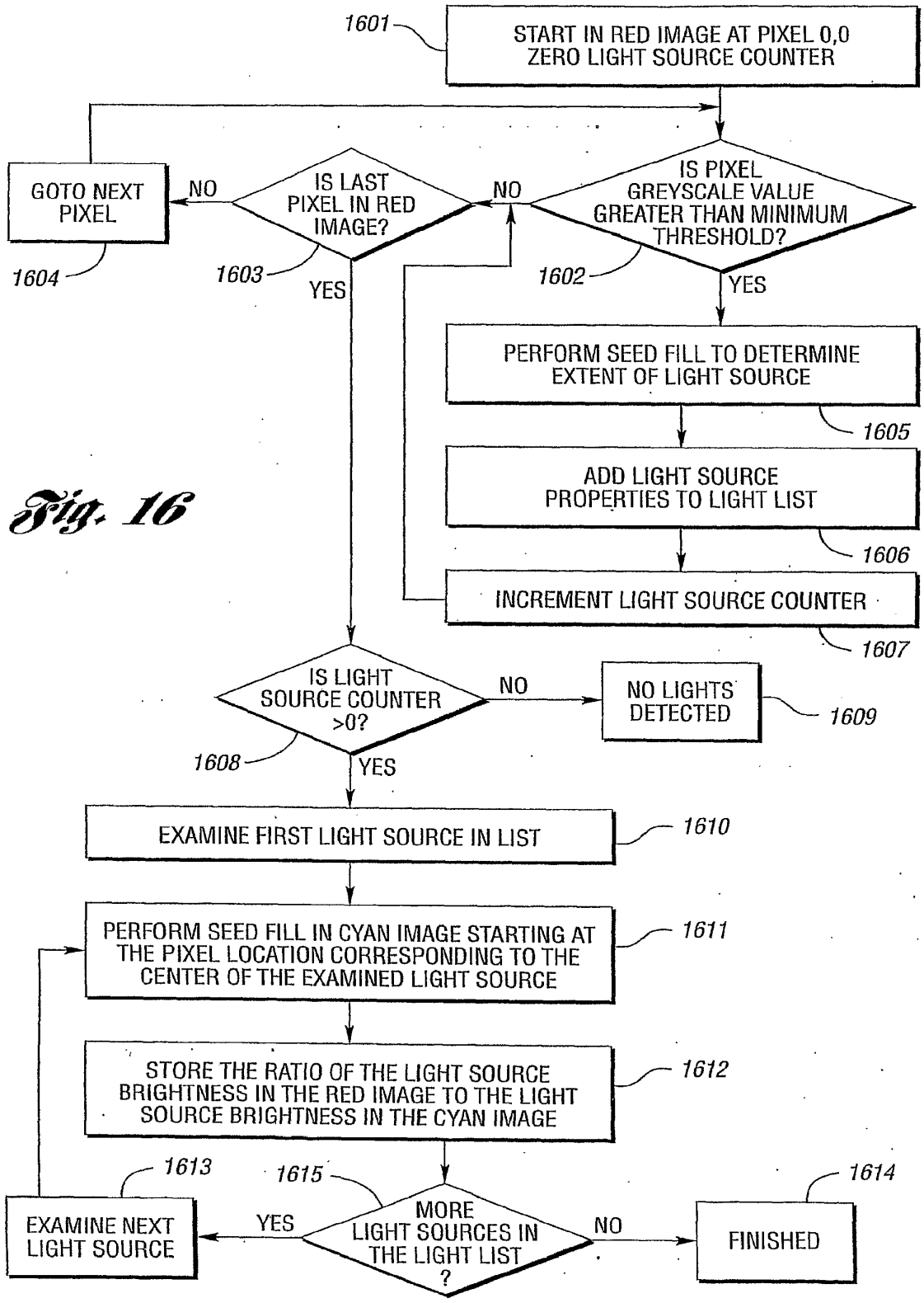
1601
START IN RED IMAGE AT PIXEL 0,0
ZERO LIGHT SOURCE COUNTER
GOTO NEXT PIXEL
NO
IS LAST PIXEL IN RED IMAGE?
NO
IS PIXEL GREYSCALE VALUE GREATER THAN MINIMUM THRESHOLD?
1604
1603
YES
1602
YES
PERFORM SEED FILL TO DETERMINE EXTENT OF LIGHT SOURCE
1605
ADD LIGHT SOURCE PROPERTIES TO LIGHT LIST
1606
INCREMENT LIGHT SOURCE COUNTER
1607
IS LIGHT SOURCE COUNTER >0?
NO
NO LIGHTS DETECTED
1609
1608
YES
EXAMINE FIRST LIGHT SOURCE IN LIST
1610
PERFORM SEED FILL IN CYAN IMAGE STARTING AT THE PIXEL LOCATION CORRESPONDING TO THE CENTER OF THE EXAMINED LIGHT SOURCE
1611
STORE THE RATIO OF THE LIGHT SOURCE BRIGHTNESS IN THE RED IMAGE TO THE LIGHT SOURCE BRIGHTNESS IN THE CYAN IMAGE
1612
1613
1615
1614
EXAMINE NEXT LIGHT SOURCE
YES
MORE LIGHT SOURCES IN THE LIGHT LIST ?
NO
FINISHED

Fig. 16

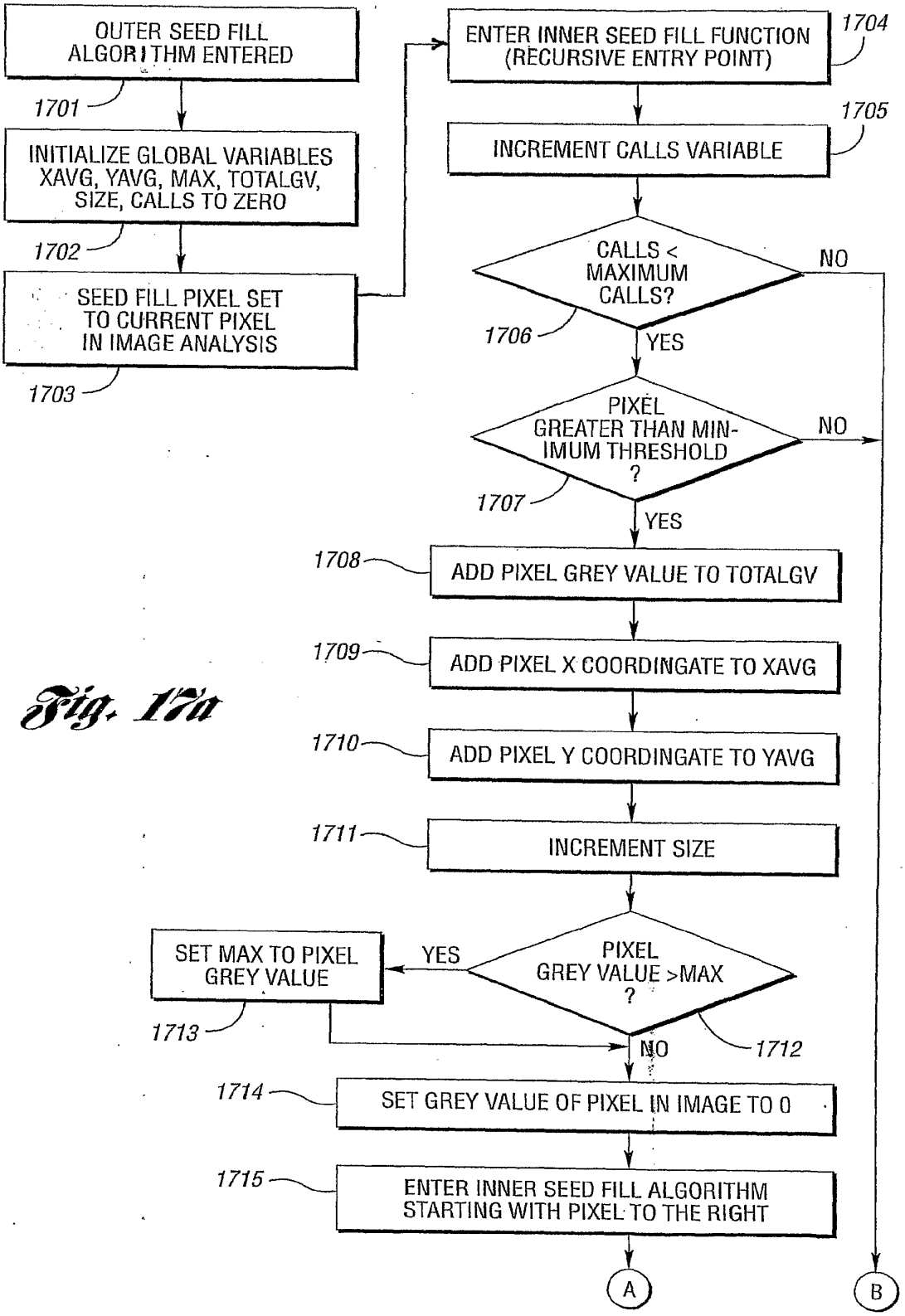
OUTER SEED FILL ALGORITHM ENTERED
1701
INITIALIZE GLOBAL VARIABLES XAVG, YAVG, MAX, TOTALGV, SIZE, CALLS TO ZERO
1702
SEED FILL PIXEL SET TO CURRENT PIXEL IN IMAGE ANALYSIS
1703
ENTER INNER SEED FILL FUNCTION (RECURSIVE ENTRY POINT)
1704
INCREMENT CALLS VARIABLE
1705
CALLS < MAXIMUM CALLS?
1706
NO
YES
PIXEL GREATER THAN MINIMUM THRESHOLD ?
1707
NO
YES
1708
ADD PIXEL GREY VALUE TO TOTALGV
1709
ADD PIXEL X COORDINGATE TO XAVG
1710
ADD PIXEL Y COORDINGATE TO YAVG
1711
INCREMENT SIZE
PIXEL GREY VALUE >MAX ?
YES
SET MAX TO PIXEL GREY VALUE
1713
NO
1712
1714
SET GREY VALUE OF PIXEL IN IMAGE TO 0
1715
ENTER INNER SEED FILL ALGORITHM STARTING WITH PIXEL TO THE RIGHT
A
B

Fig. 17a

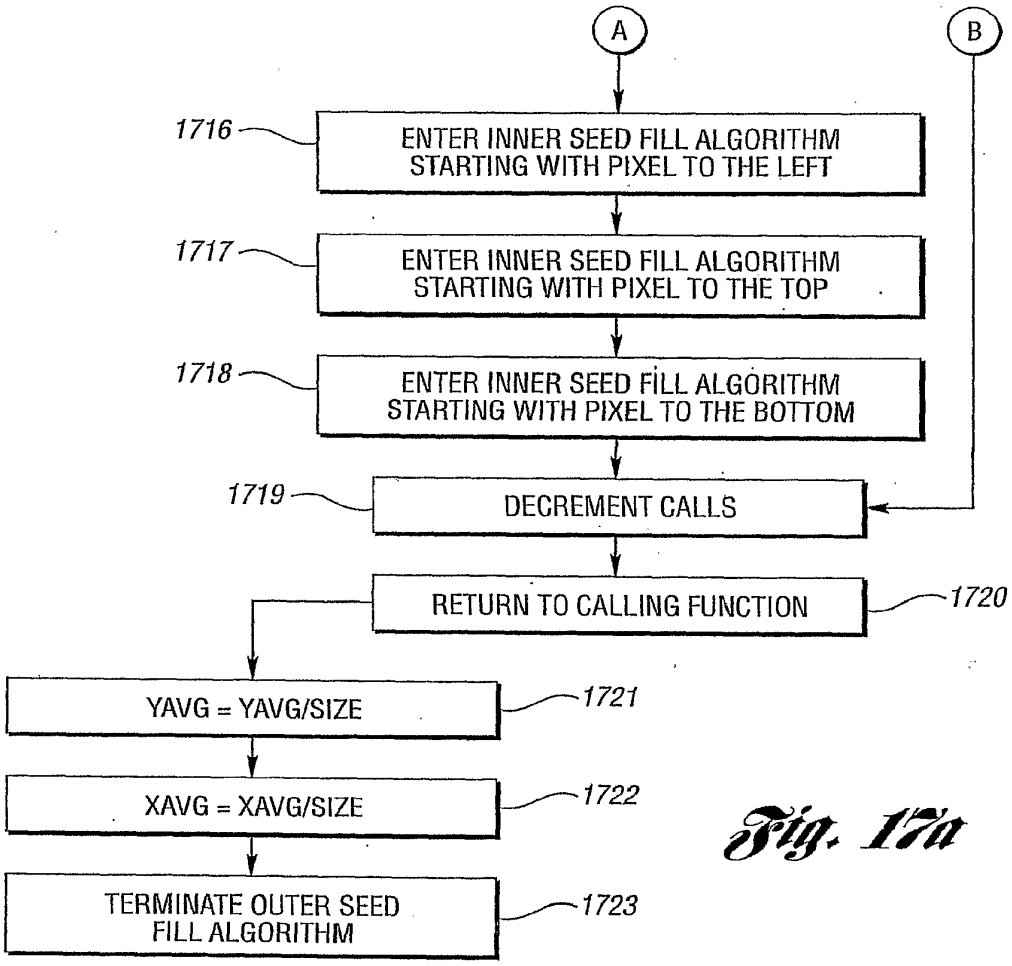

Fig. 17a

Fig. 17b

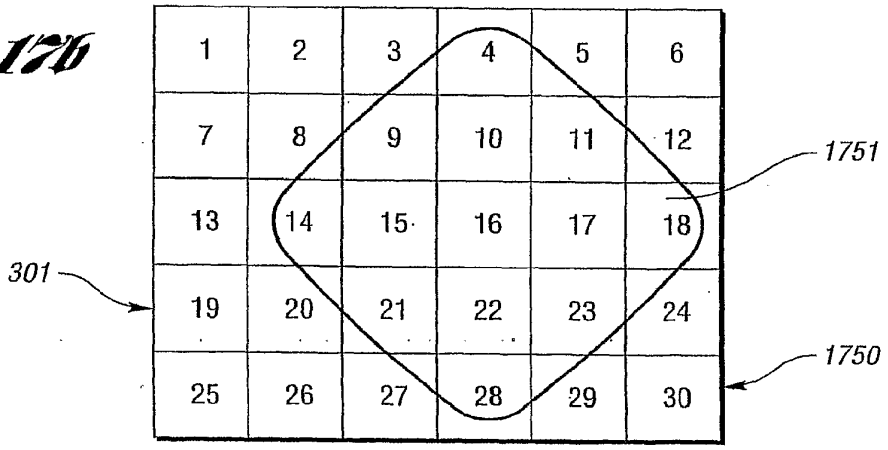

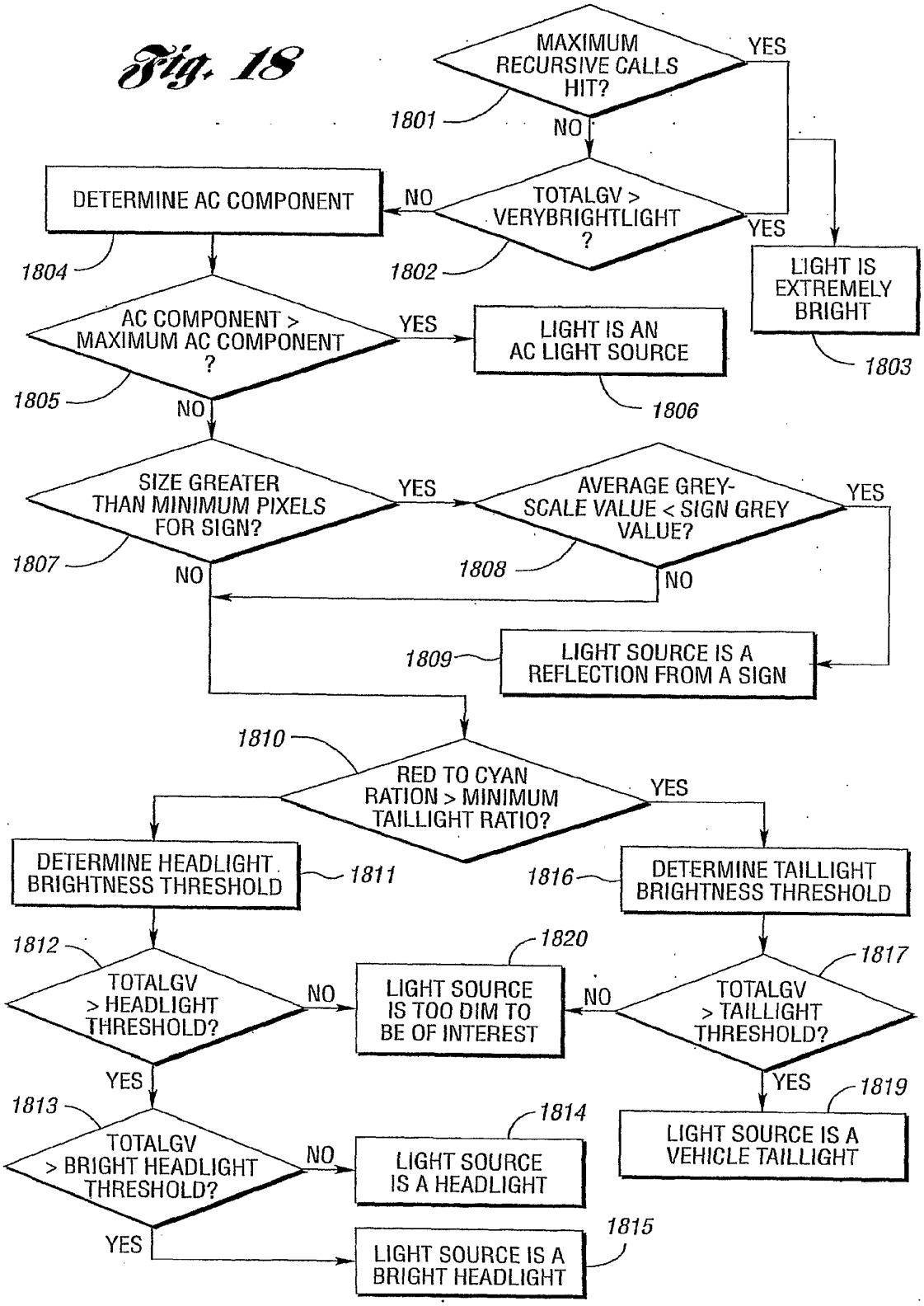
Fig. 18
MAXIMUM RECURSIVE CALLS HIT?
1801
YES
NO
TOTALGV > VERYBRIGHTLIGHT ?
1802
NO
YES
DETERMINE AC COMPONENT
1804
LIGHT IS EXTREMELY BRIGHT
1803
AC COMPONENT > MAXIMUM AC COMPONENT ?
1805
YES
LIGHT IS AN AC LIGHT SOURCE
1806
NO
SIZE GREATER THAN MINIMUM PIXELS FOR SIGN?
1807
YES
NO
AVERAGE GREY-SCALE VALUE < SIGN GREY VALUE?
1808
YES
NO
LIGHT SOURCE IS A REFLECTION FROM A SIGN
1809
1810
RED TO CYAN RATION > MINIMUM TAILLIGHT RATIO?
YES
DETERMINE HEADLIGHT BRIGHTNESS THRESHOLD
1811
DETERMINE TAILLIGHT BRIGHTNESS THRESHOLD
1816
1812
TOTALGV > HEADLIGHT THRESHOLD?
NO
LIGHT SOURCE IS TOO DIM TO BE OF INTEREST
1820
NO
TOTALGV > TAILLIGHT THRESHOLD?
1817
YES
YES
1819
LIGHT SOURCE IS A VEHICLE TAILLIGHT
1813
TOTALGV > BRIGHT HEADLIGHT THRESHOLD?
NO
LIGHT SOURCE IS A HEADLIGHT
1814
YES
LIGHT SOURCE IS A BRIGHT HEADLIGHT
1815

16/40

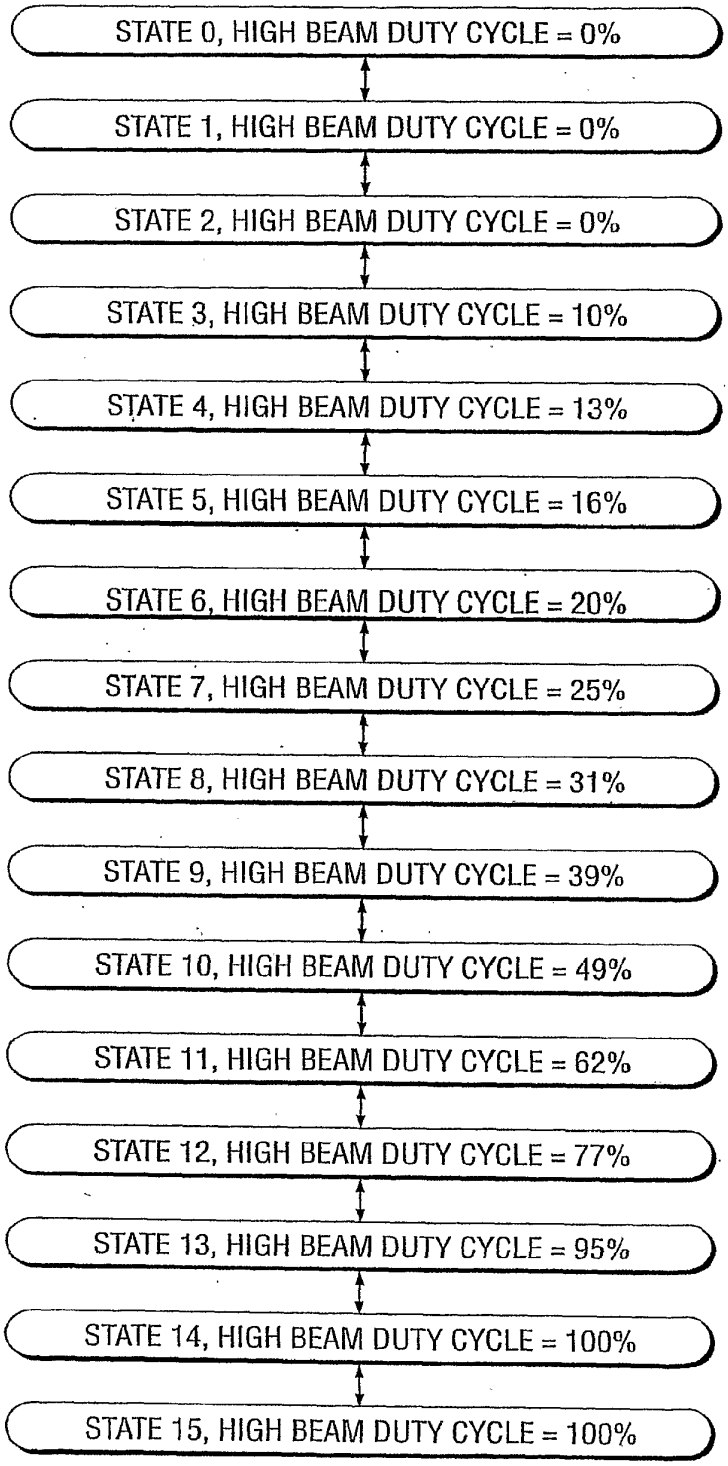
STATE 0, HIGH BEAM DUTY CYCLE = 0%
STATE 1, HIGH BEAM DUTY CYCLE = 0%
STATE 2, HIGH BEAM DUTY CYCLE = 0%
STATE 3, HIGH BEAM DUTY CYCLE = 10%
STATE 4, HIGH BEAM DUTY CYCLE = 13%
STATE 5, HIGH BEAM DUTY CYCLE = 16%
STATE 6, HIGH BEAM DUTY CYCLE = 20%
STATE 7, HIGH BEAM DUTY CYCLE = 25%
STATE 8, HIGH BEAM DUTY CYCLE = 31%
STATE 9, HIGH BEAM DUTY CYCLE = 39%
STATE 10, HIGH BEAM DUTY CYCLE = 49%
STATE 11, HIGH BEAM DUTY CYCLE = 62%
STATE 12, HIGH BEAM DUTY CYCLE = 77%
STATE 13, HIGH BEAM DUTY CYCLE = 95%
STATE 14, HIGH BEAM DUTY CYCLE = 100%
STATE 15, HIGH BEAM DUTY CYCLE = 100%

Fig. 19

Fig. 20

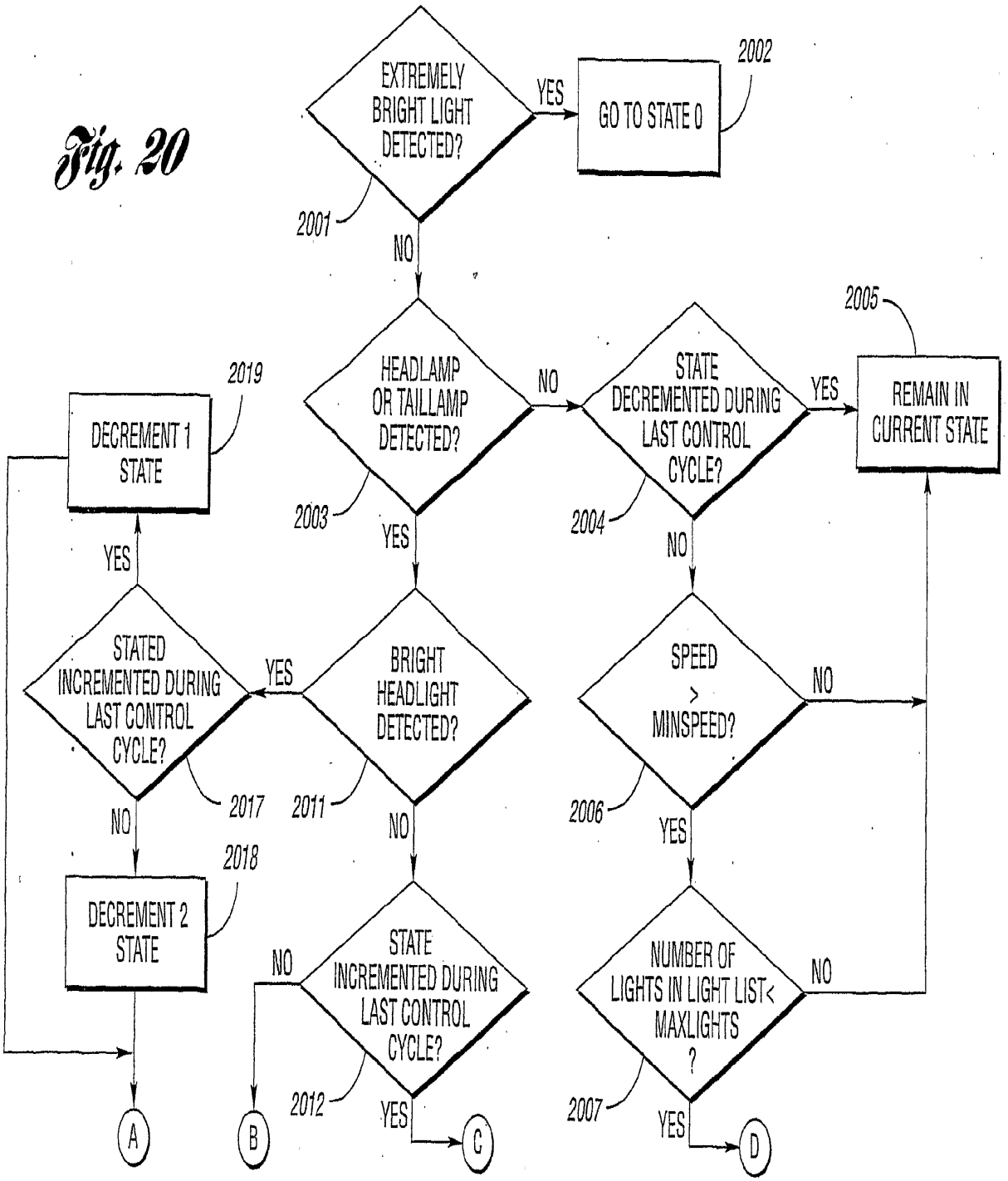
EXTREMELY BRIGHT LIGHT DETECTED?
2001
YES
GO TO STATE 0
2002
NO
HEADLAMP OR TAILLAMP DETECTED?
2003
NO
STATE DECREMENTED DURING LAST CONTROL CYCLE?
2004
YES
REMAIN IN CURRENT STATE
2005
YES
BRIGHT HEADLIGHT DETECTED?
2011
NO
SPEED > MINSPEED?
2006
NO
YES
NUMBER OF LIGHTS IN LIGHT LIST< MAXLIGHTS ?
2007
NO
YES
STATE INCREMENTED DURING LAST CONTROL CYCLE?
2012
NO
YES
STATED INCREMENTED DURING LAST CONTROL CYCLE?
2017
YES
NO
DECREMENT 1 STATE
2019
DECREMENT 2 STATE
2018
A
B
C
D

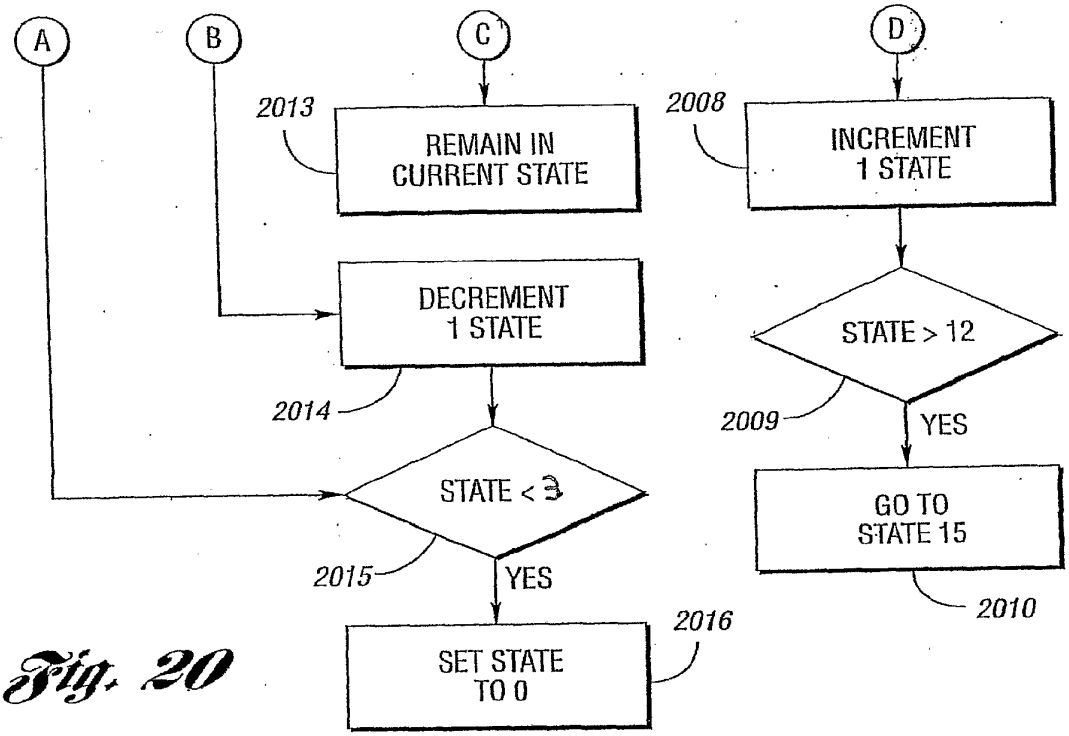
A
B
C
D
2013
REMAIN IN CURRENT STATE
2008
INCREMENT 1 STATE
DECREMENT 1 STATE
STATE > 12
2014
2009
YES
STATE < 3
GO TO STATE 15
2015
YES
2010
2016
SET STATE TO 0

Fig. 20

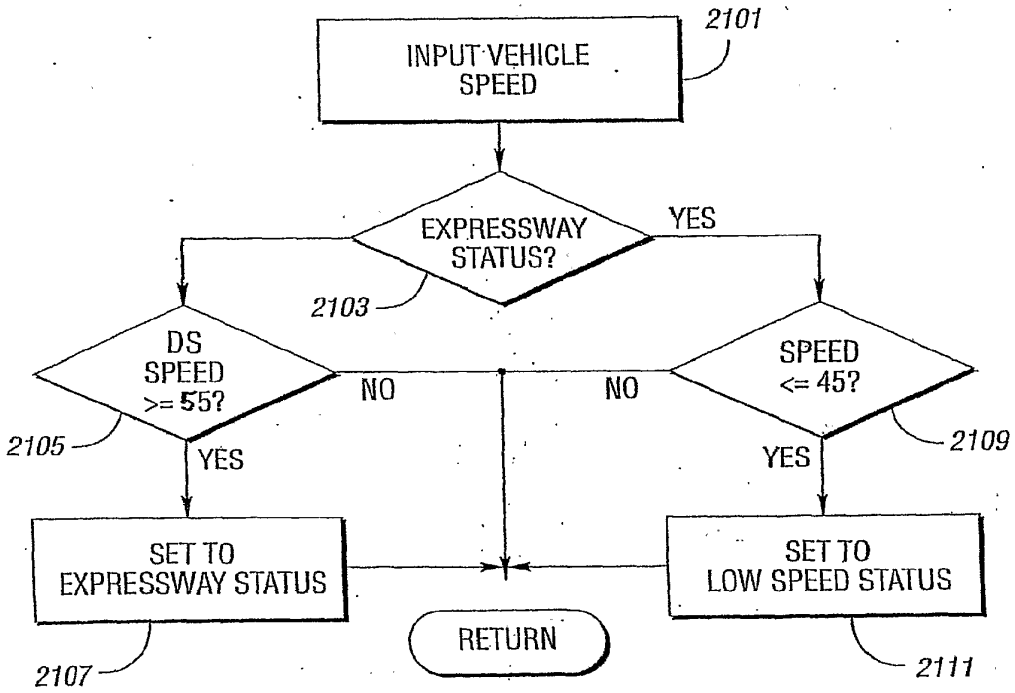
2101
INPUT VEHICLE SPEED
EXPRESSWAY STATUS?
YES
2103
DS SPEED >= 55?
NO
NO
SPEED <= 45?
2105
YES
YES
2109
SET TO EXPRESSWAY STATUS
SET TO LOW SPEED STATUS
RETURN
2107
2111

Fig. 21

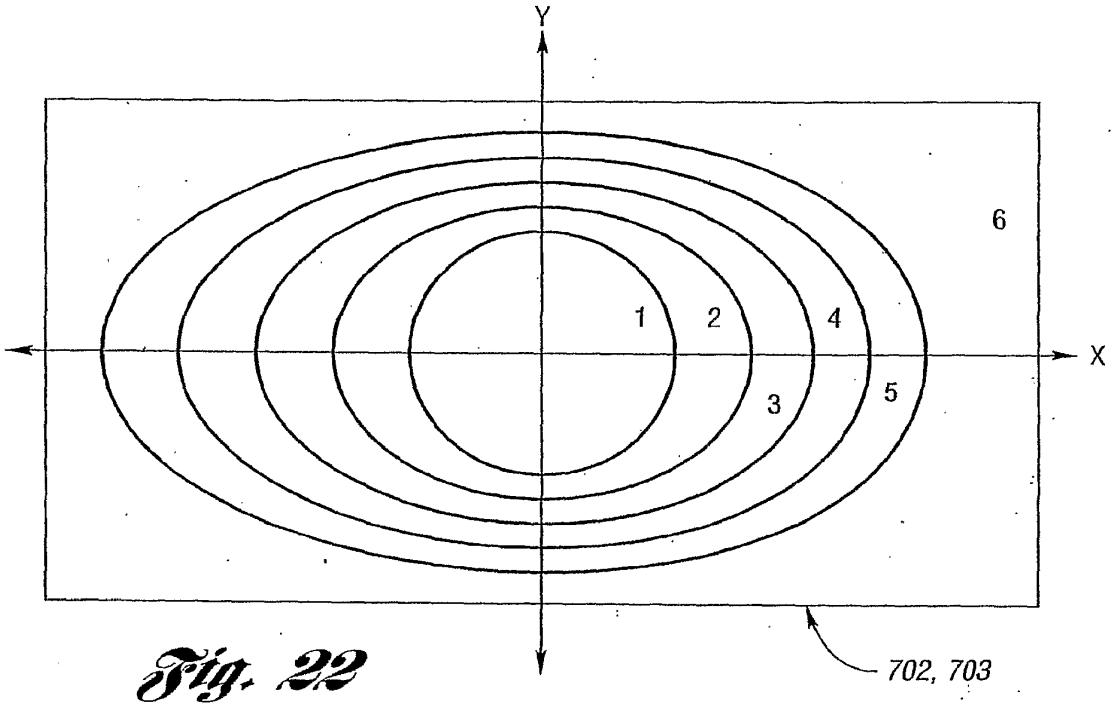
Y
X
1
2
3
4
5
6
702, 703

Fig. 22

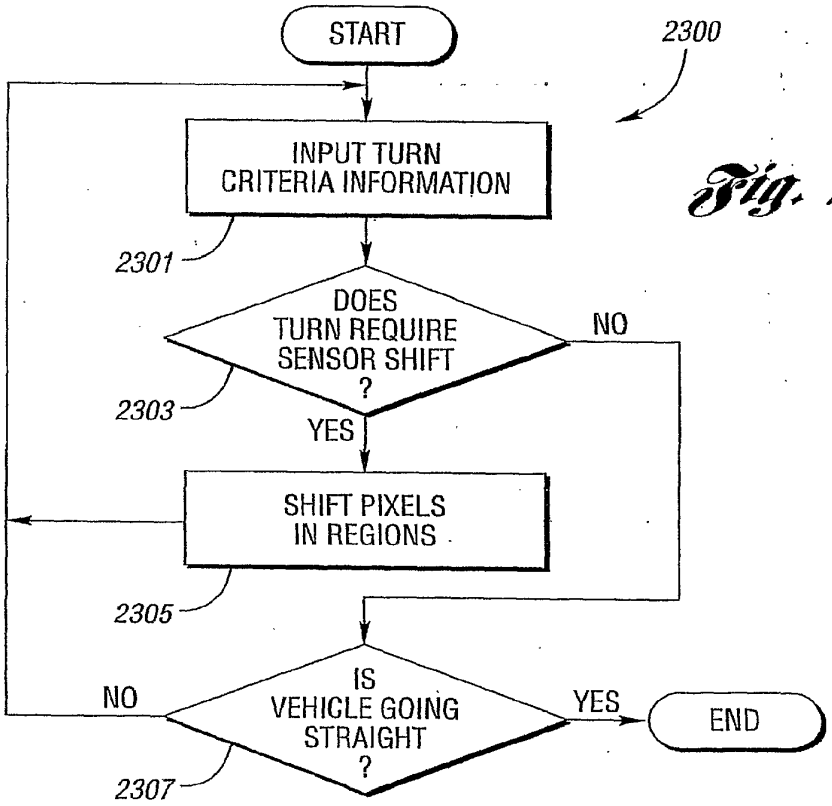
START
2300
INPUT TURN CRITERIA INFORMATION
2301
DOES TURN REQUIRE SENSOR SHIFT ?
NO
2303
YES
SHIFT PIXELS IN REGIONS
2305
IS VEHICLE GOING STRAIGHT ?
NO
YES
END
2307

Fig. 23

Fig. 24

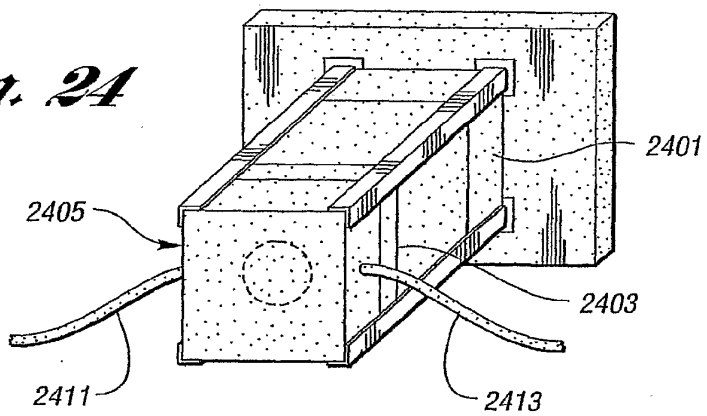

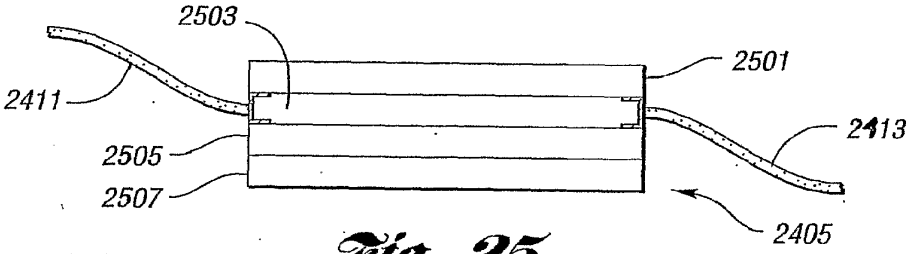

Fig. 25

Fig. 26b

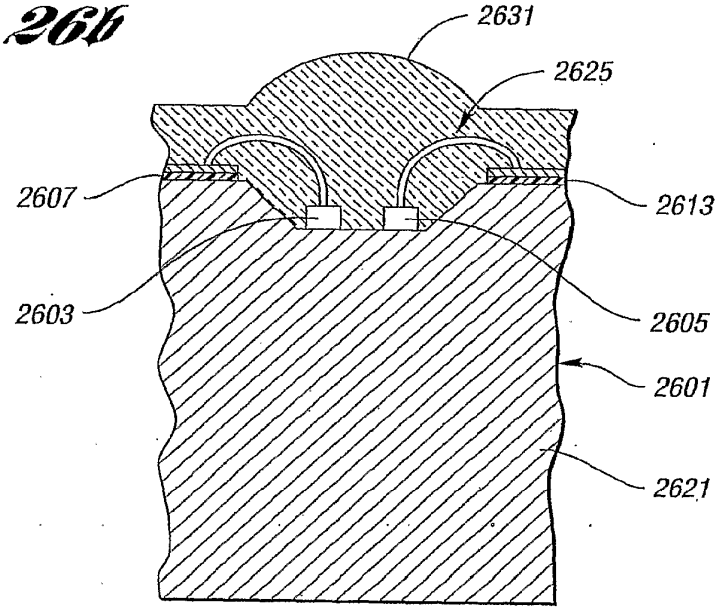

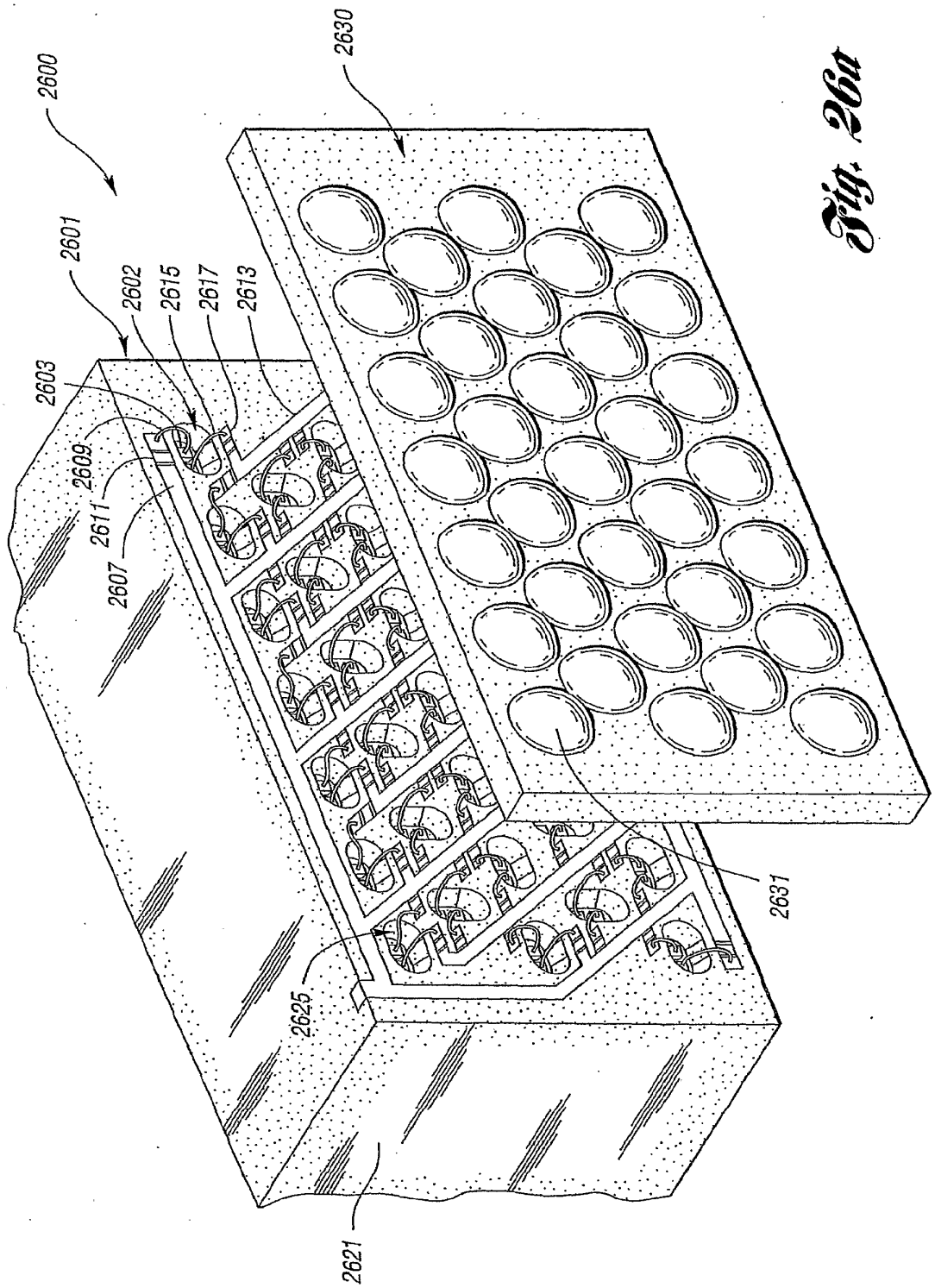
2600
2601
2602
2615
2617
2613
2603
2609
2611
2607
2630
2631
2625
2621

Fig. 26b

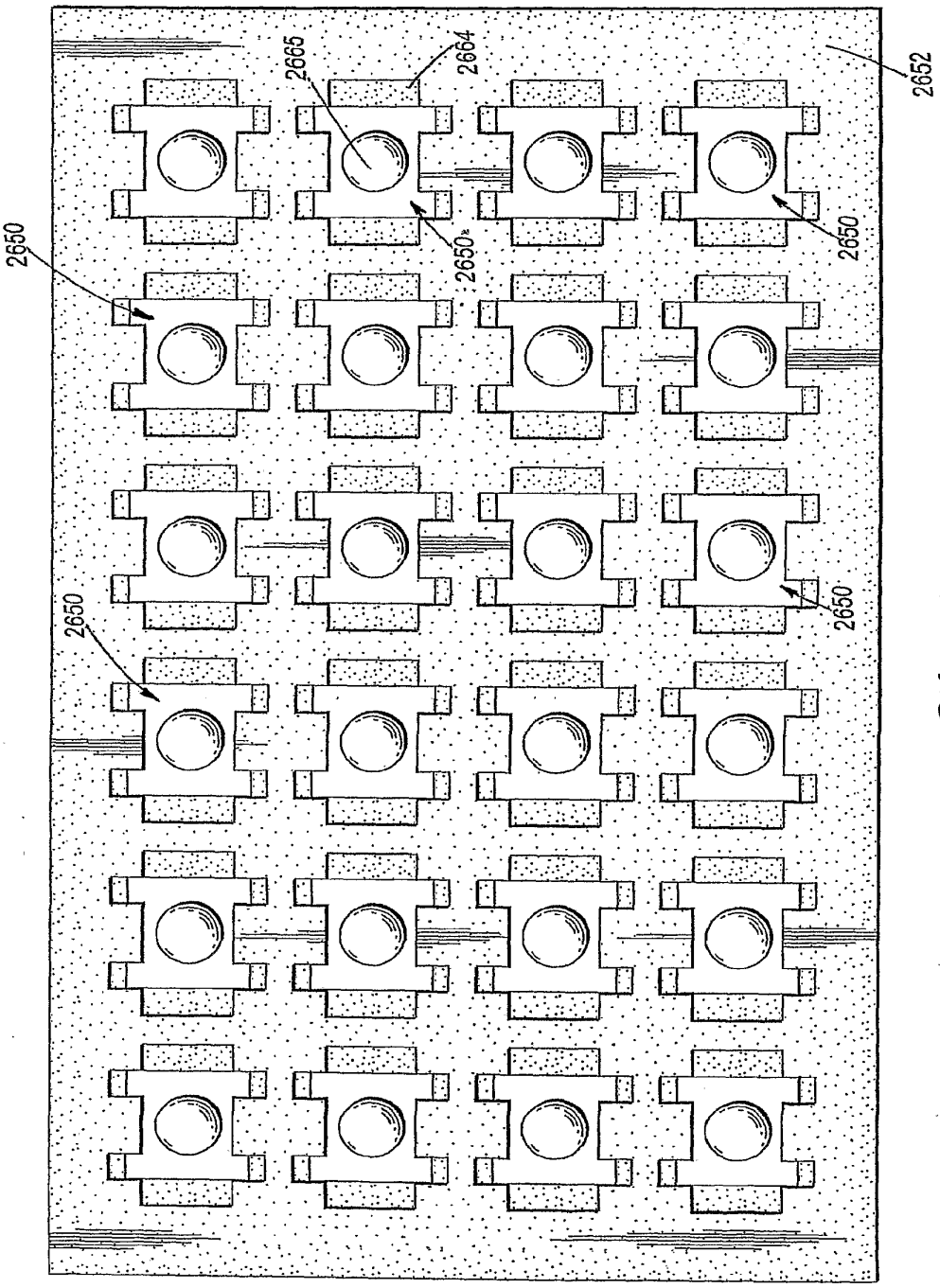

Fig. 26c

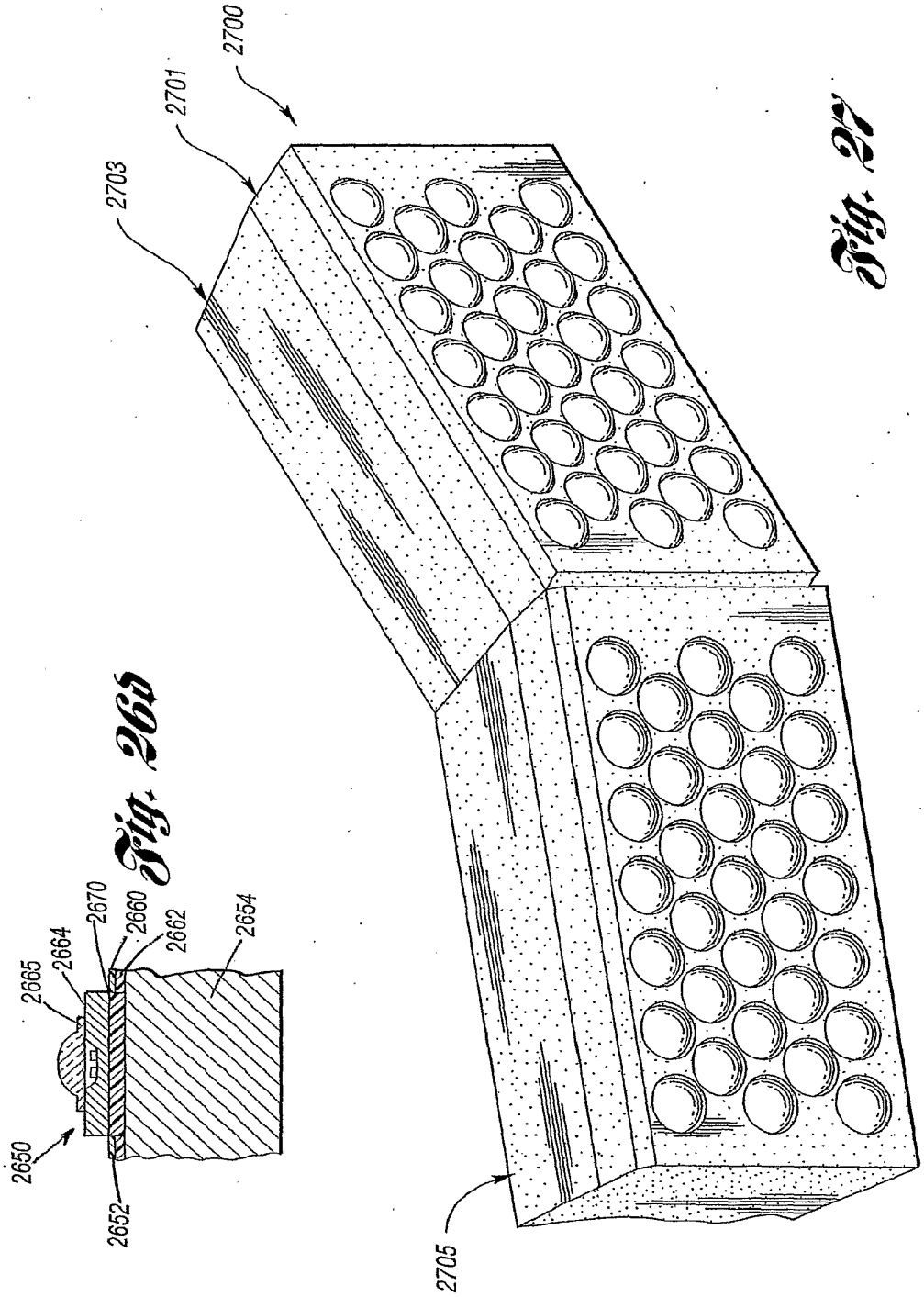

Fig. 26b

Fig. 27

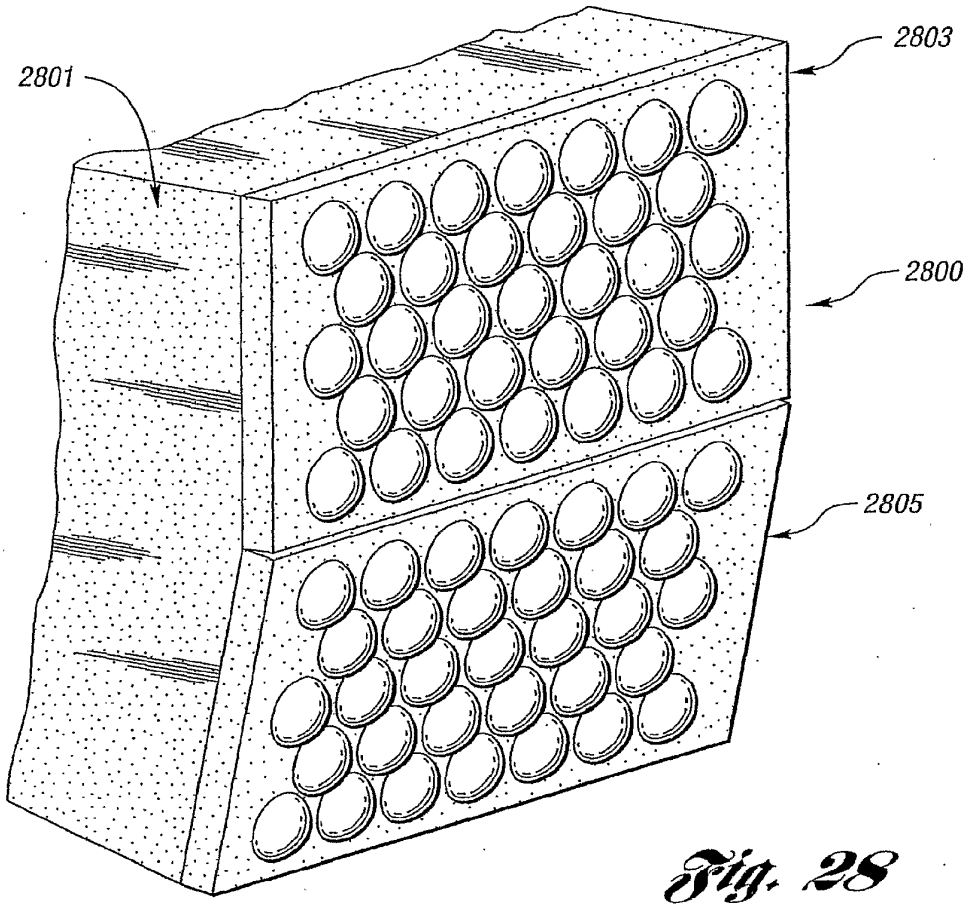
2801
2803
2800
2805

Fig. 28

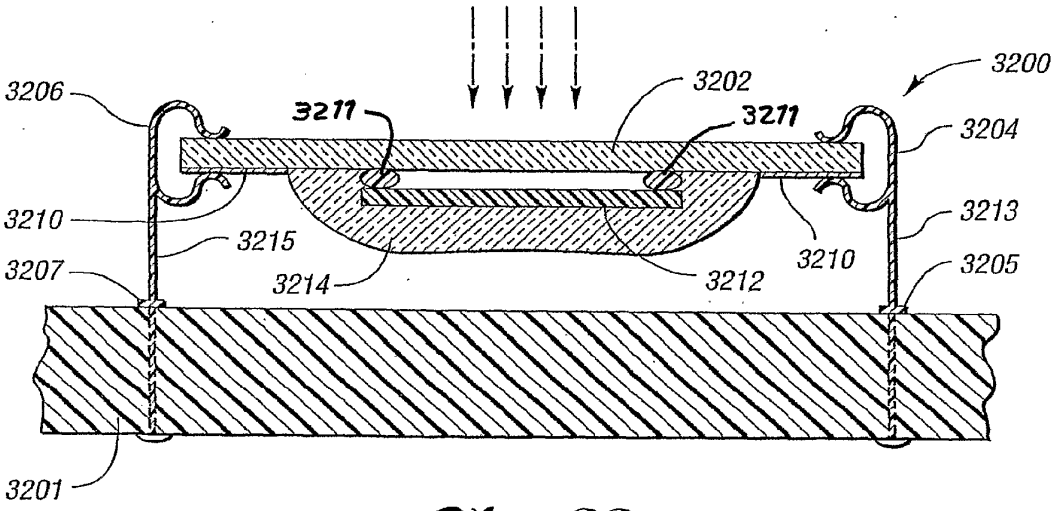
3200
3206
3202
3211
3211
3204
3210
3213
3215
3210
3207
3214
3212
3205
3201

Fig. 32

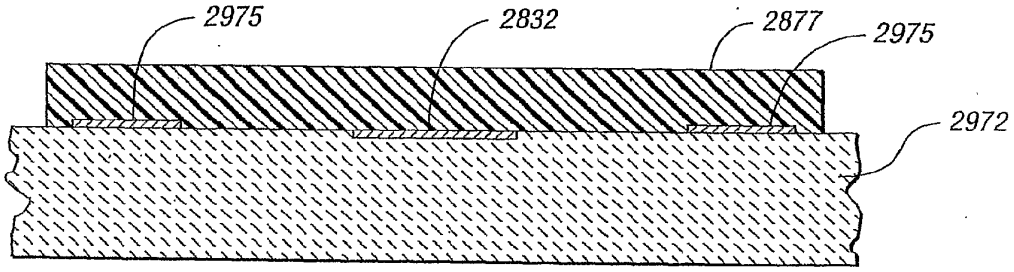

Fig. 29a

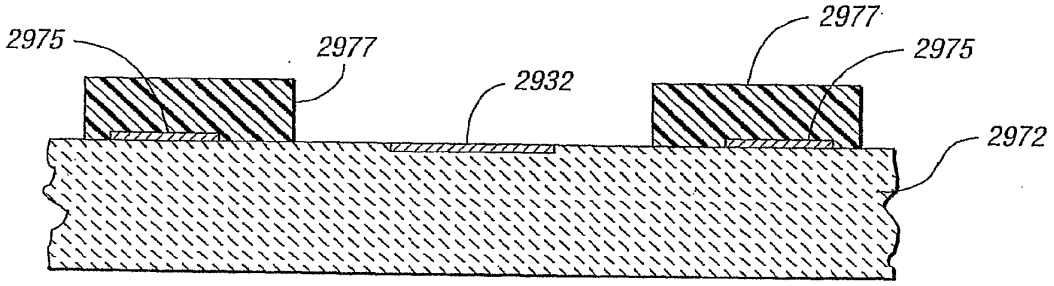

Fig. 29b

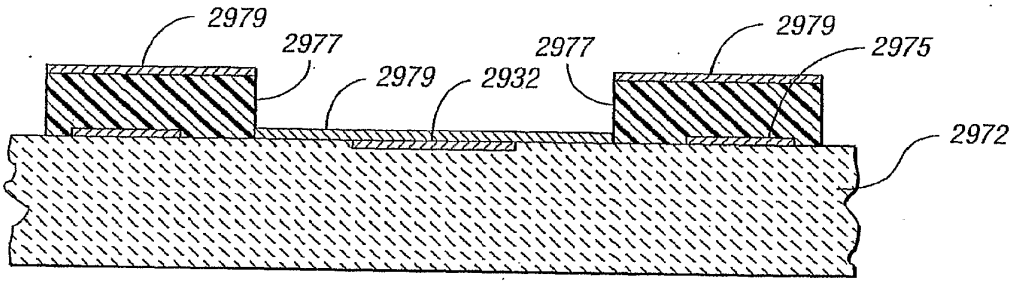

Fig. 29c

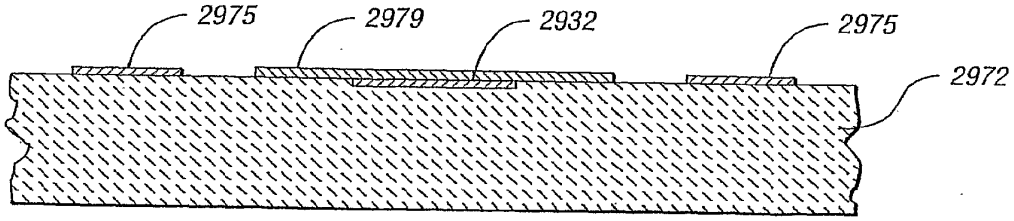

Fig. 29d

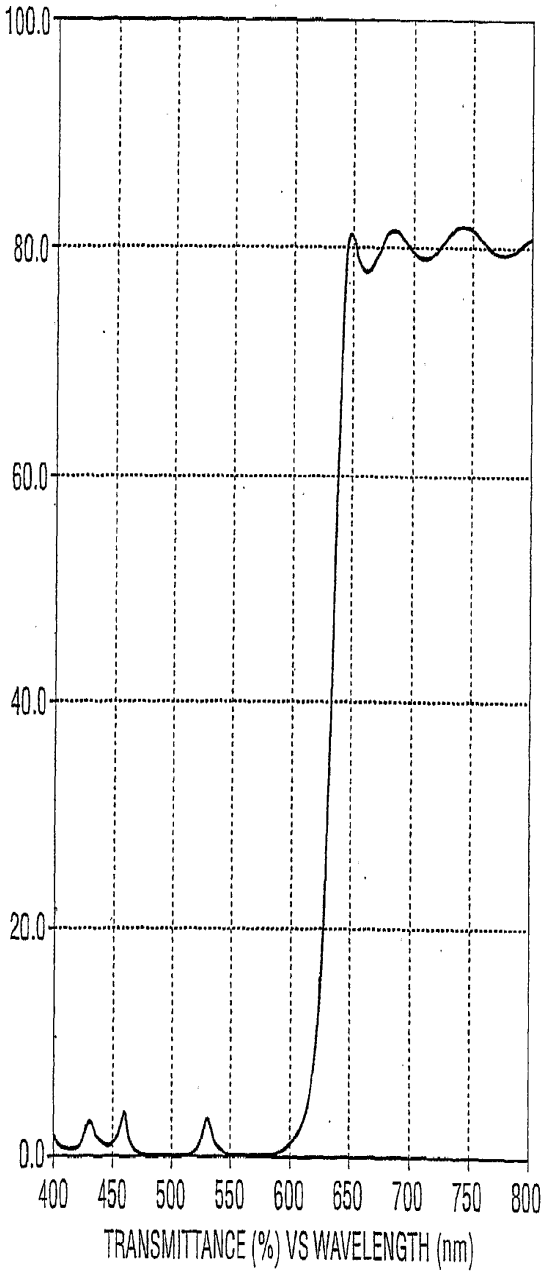
100.0
80.0
60.0
40.0
20.0
0.0
400 450 500 550 600 650 700 750 800
TRANSMITTANCE (%) VS WAVELENGTH (nm)

Fig. 30

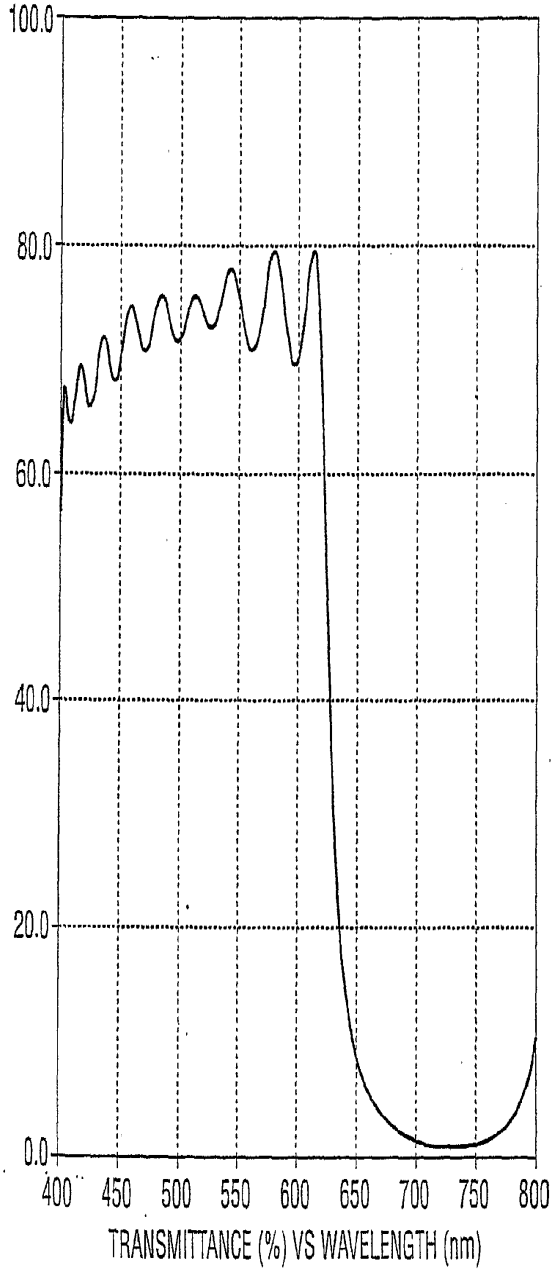
100.0
80.0
60.0
40.0
20.0
0.0
400 450 500 550 600 650 700 750 800
TRANSMITTANCE (%) VS WAVELENGTH (nm)

Fig. 31

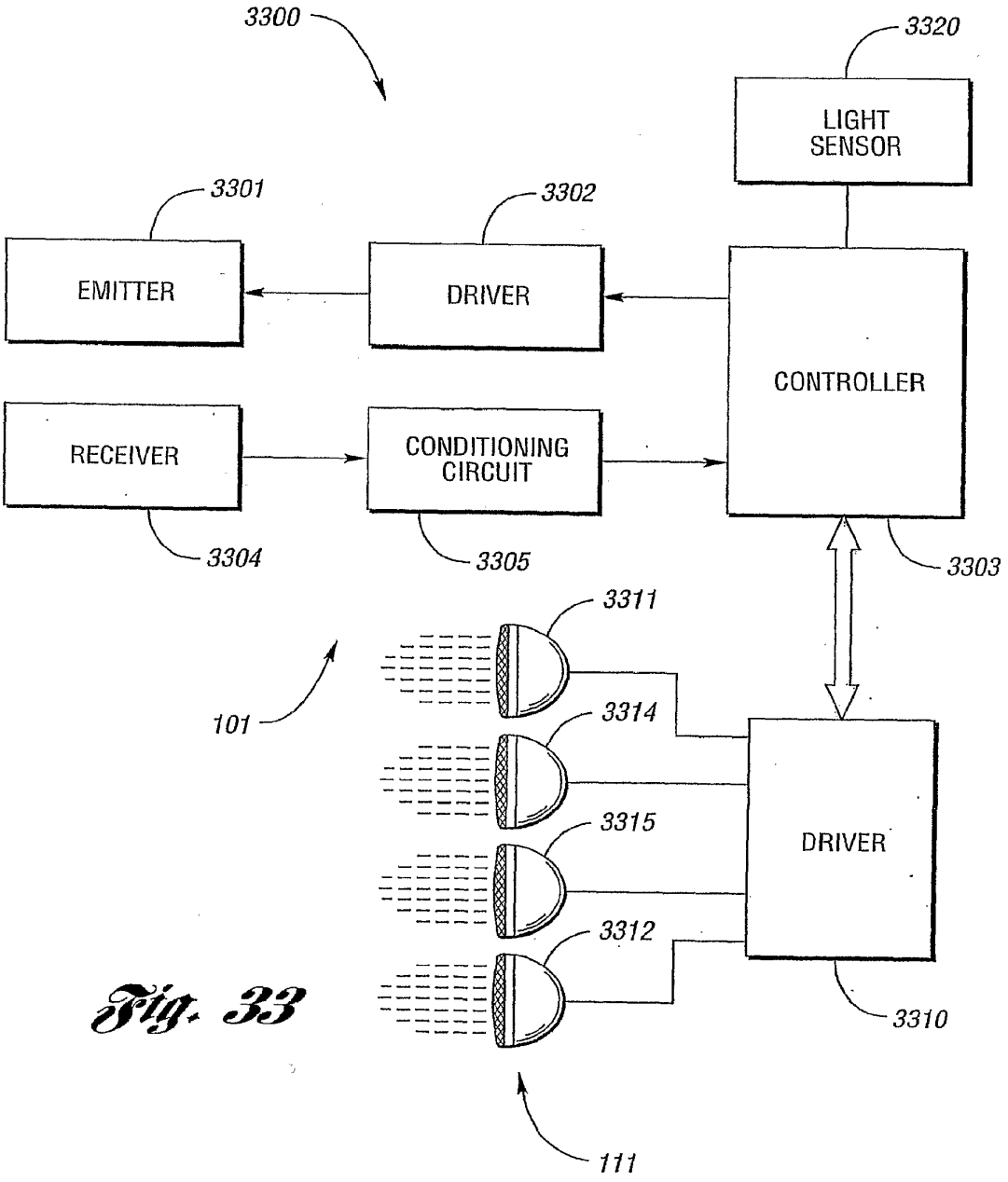
3300
3320
LIGHT SENSOR
3301
3302
EMITTER
DRIVER
CONTROLLER
RECEIVER
CONDITIONING CIRCUIT
3304
3305
3303
3311
101
3314
3315
DRIVER
3312
3310
111

Fig. 33

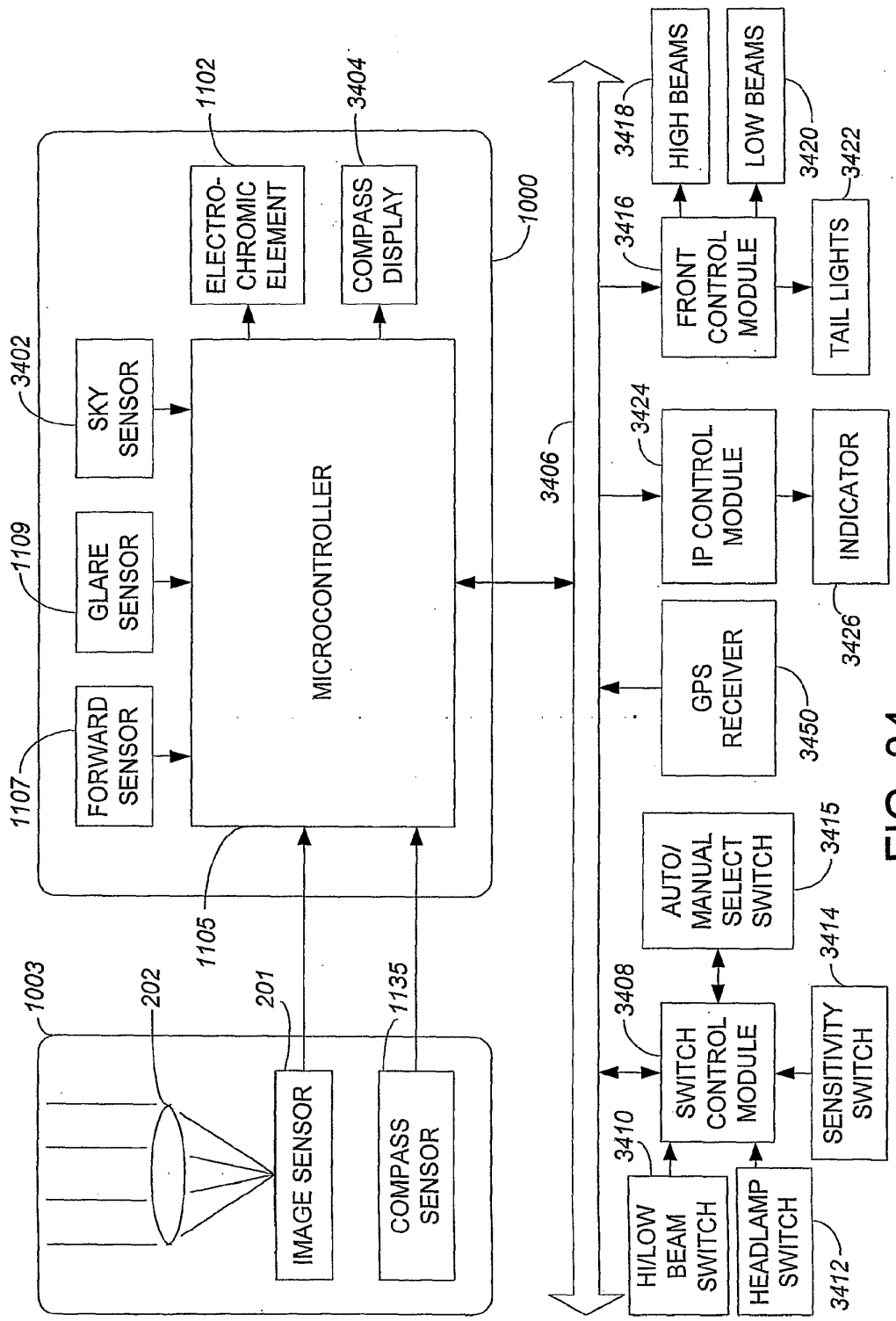
1000
1102
ELECTRO-CHROMIC ELEMENT
3404
COMPASS DISPLAY
3402
SKY SENSOR
1109
GLARE SENSOR
1107
FORWARD SENSOR
MICROCONTROLLER
1105
1003
202
201
IMAGE SENSOR
1135
COMPASS SENSOR
3406
3418
HIGH BEAMS
LOW BEAMS
3420
3416
FRONT CONTROL MODULE
TAIL LIGHTS
3422
3424
IP CONTROL MODULE
INDICATOR
3426
GPS RECEIVER
3450
AUTO/ MANUAL SELECT SWITCH
3415
3408
SWITCH CONTROL MODULE
3414
SENSITIVITY SWITCH
3410
HI/LOW BEAM SWITCH
HEADLAMP SWITCH
3412

FIG. 34

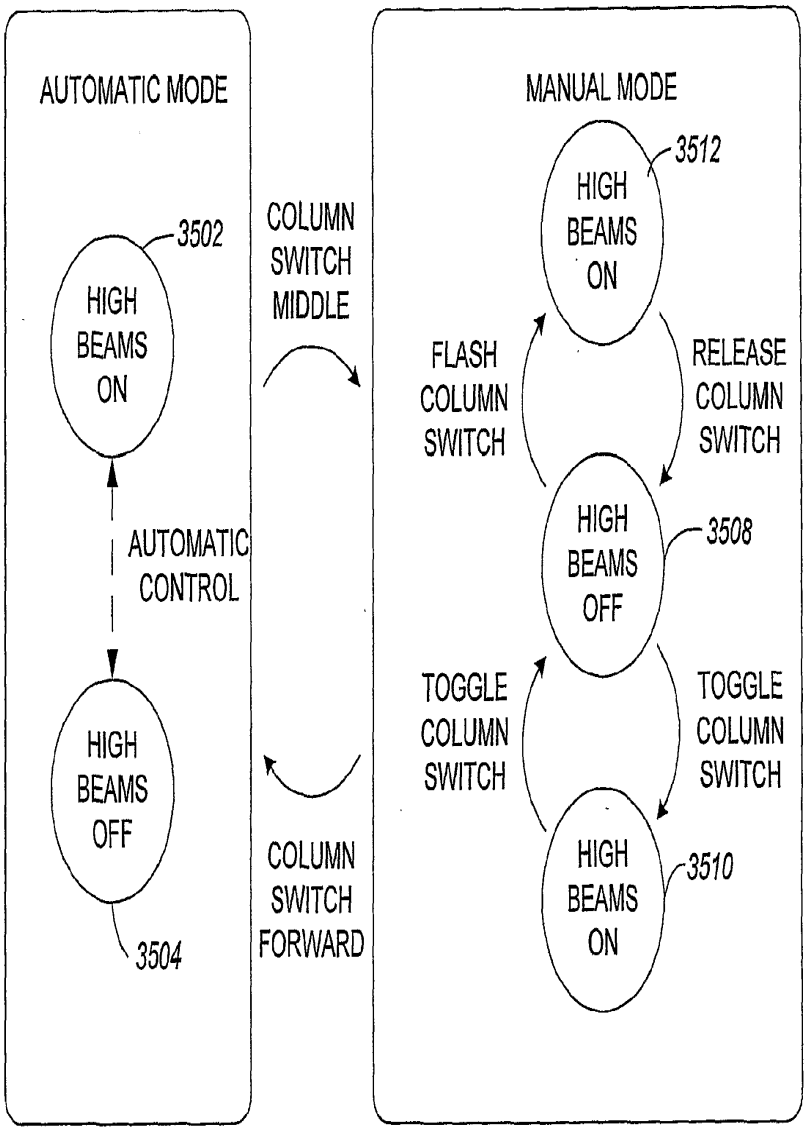
AUTOMATIC MODE
3502
HIGH BEAMS ON
AUTOMATIC CONTROL
HIGH BEAMS OFF
3504
COLUMN SWITCH MIDDLE
COLUMN SWITCH FORWARD
MANUAL MODE
3512
HIGH BEAMS ON
FLASH COLUMN SWITCH
RELEASE COLUMN SWITCH
HIGH BEAMS OFF
3508
TOGGLE COLUMN SWITCH
TOGGLE COLUMN SWITCH
HIGH BEAMS ON
3510

FIG. 35

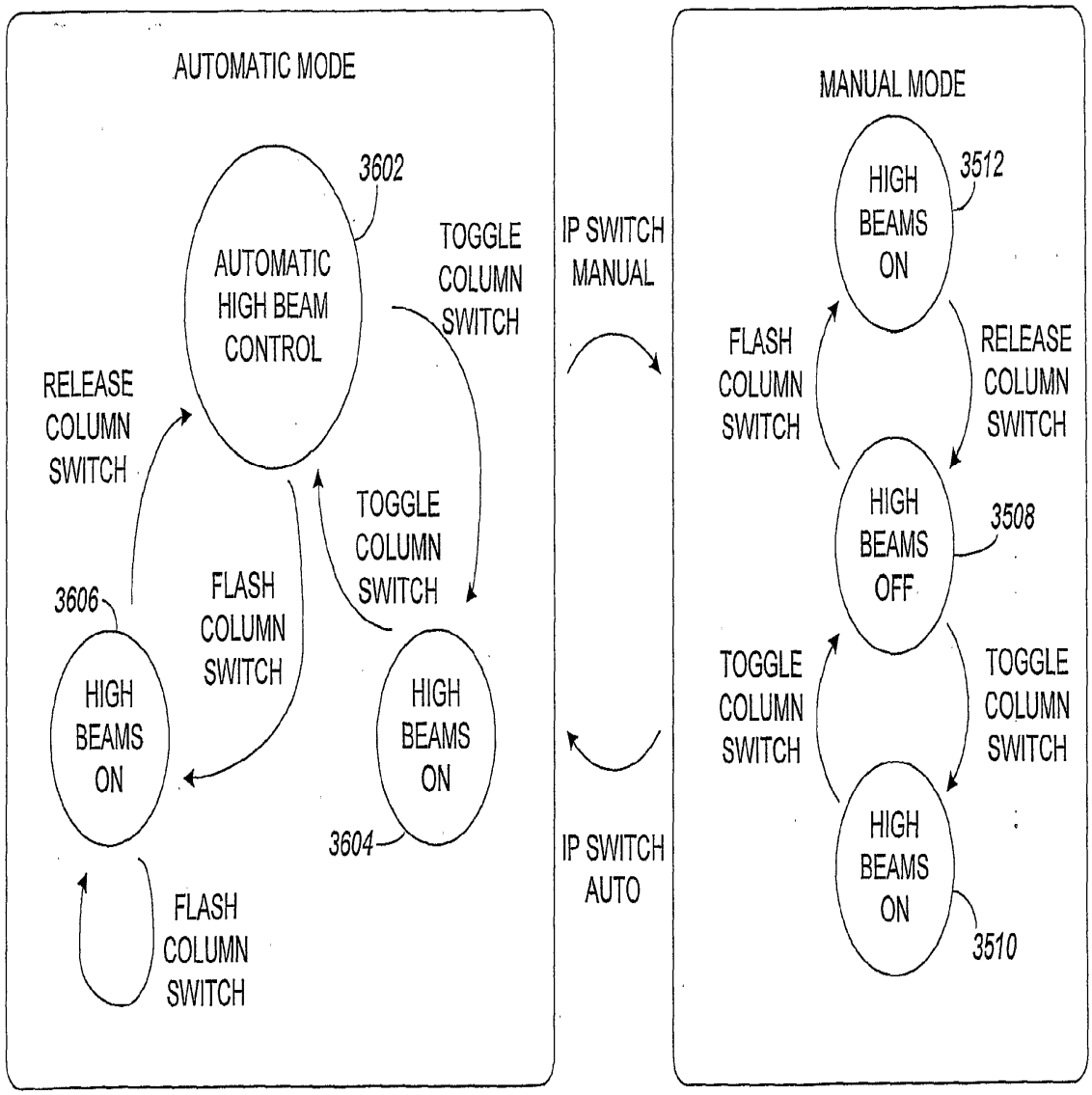
AUTOMATIC MODE
3602
AUTOMATIC HIGH BEAM CONTROL
TOGGLE COLUMN SWITCH
RELEASE COLUMN SWITCH
TOGGLE COLUMN SWITCH
FLASH COLUMN SWITCH
3606
HIGH BEAMS ON
HIGH BEAMS ON
3604
FLASH COLUMN SWITCH
IP SWITCH MANUAL
IP SWITCH AUTO
MANUAL MODE
HIGH BEAMS ON
3512
FLASH COLUMN SWITCH
RELEASE COLUMN SWITCH
HIGH BEAMS OFF
3508
TOGGLE COLUMN SWITCH
TOGGLE COLUMN SWITCH
HIGH BEAMS ON
3510

FIG. 36

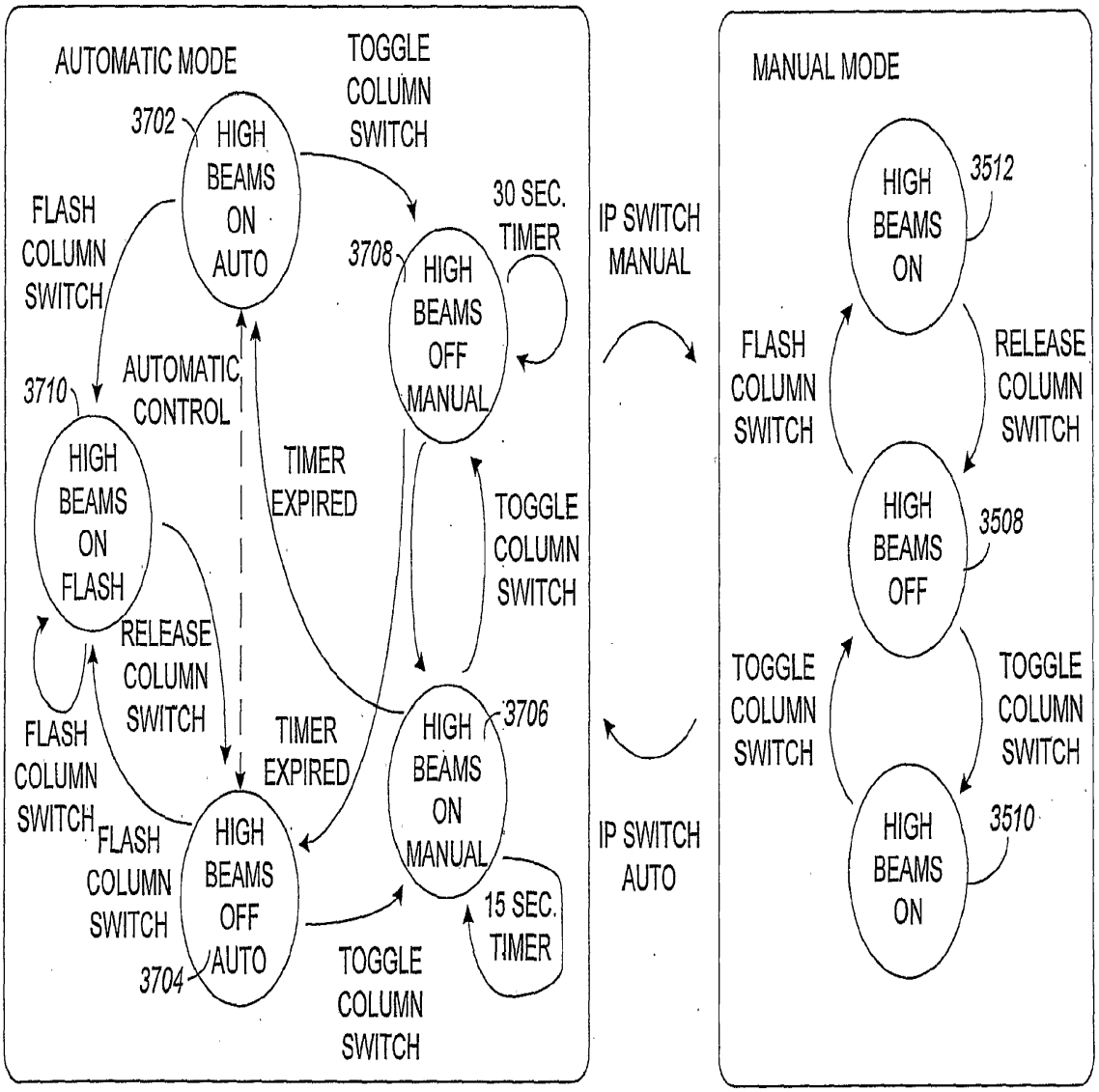
AUTOMATIC MODE
TOGGLE COLUMN SWITCH
3702
HIGH BEAMS ON AUTO
FLASH COLUMN SWITCH
30 SEC. TIMER
3708
HIGH BEAMS OFF MANUAL
3710
AUTOMATIC CONTROL
HIGH BEAMS ON FLASH
TIMER EXPIRED
TOGGLE COLUMN SWITCH
RELEASE COLUMN SWITCH
FLASH COLUMN SWITCH
TIMER EXPIRED
3706
HIGH BEAMS ON MANUAL
FLASH COLUMN SWITCH
HIGH BEAMS OFF AUTO
15 SEC. TIMER
3704
TOGGLE COLUMN SWITCH
IP SWITCH MANUAL
IP SWITCH AUTO
MANUAL MODE
HIGH BEAMS ON
3512
FLASH COLUMN SWITCH
RELEASE COLUMN SWITCH
HIGH BEAMS OFF
3508
TOGGLE COLUMN SWITCH
TOGGLE COLUMN SWITCH
HIGH BEAMS ON
3510

FIG. 37

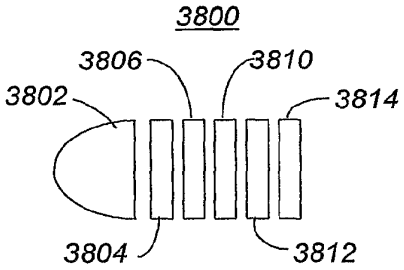

FIG. 38

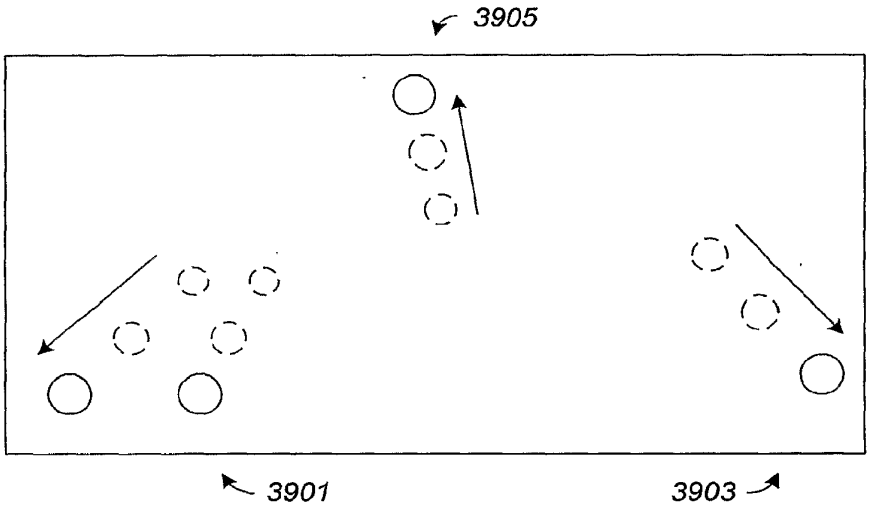

FIG. 39

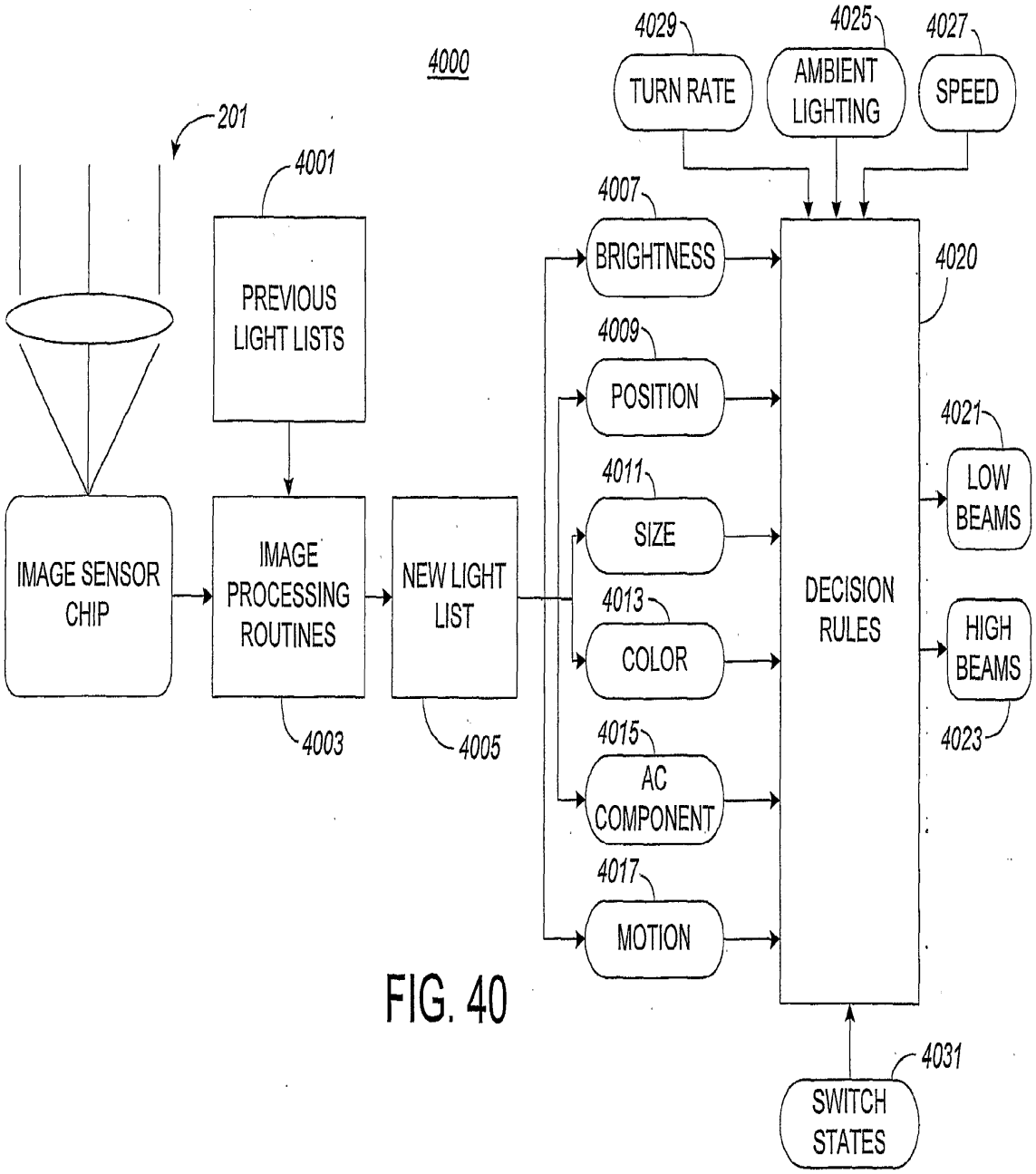
4000
201
4001
PREVIOUS LIGHT LISTS
IMAGE SENSOR CHIP
IMAGE PROCESSING ROUTINES
4003
NEW LIGHT LIST
4005
4029
TURN RATE
4025
AMBIENT LIGHTING
4027
SPEED
4007
BRIGHTNESS
4009
POSITION
4011
SIZE
4013
COLOR
4015
AC COMPONENT
4017
MOTION
4020
DECISION RULES
4021
LOW BEAMS
HIGH BEAMS
4023
4031
SWITCH STATES

FIG. 40

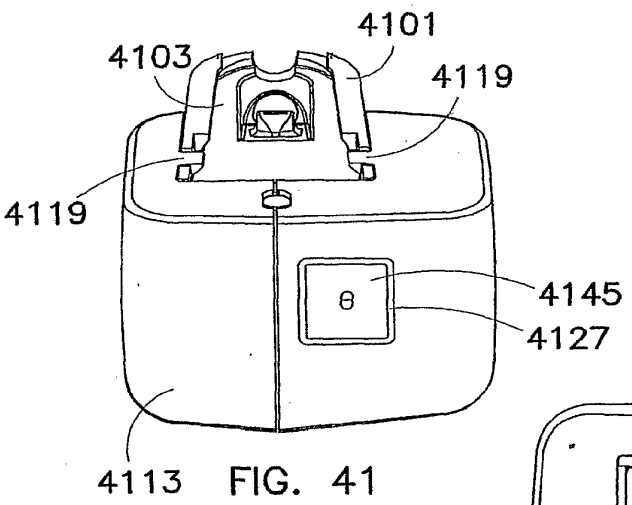

FIG. 41

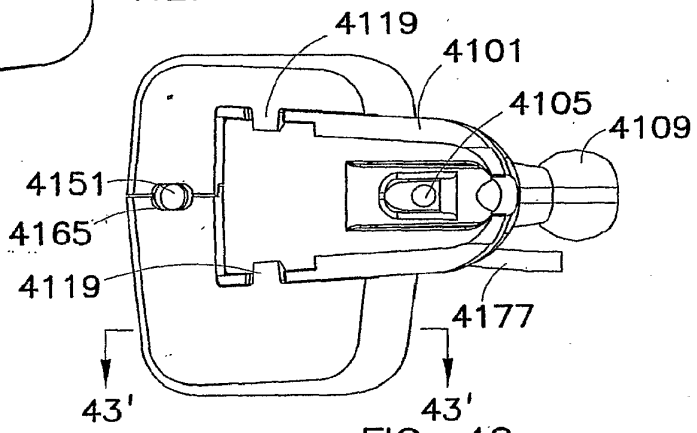

FIG. 42

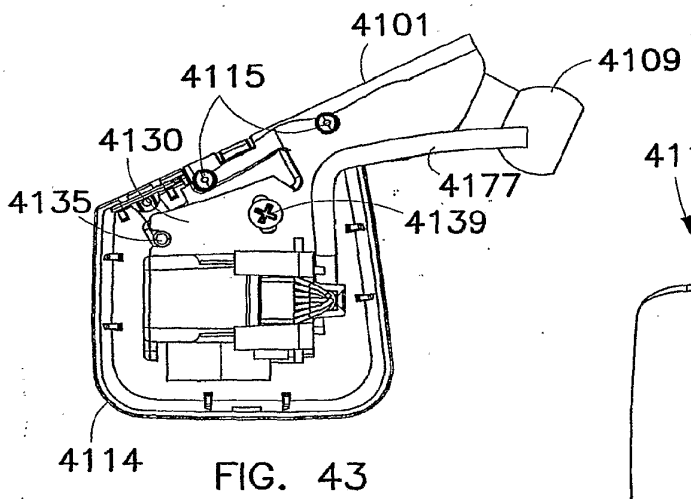

FIG. 43

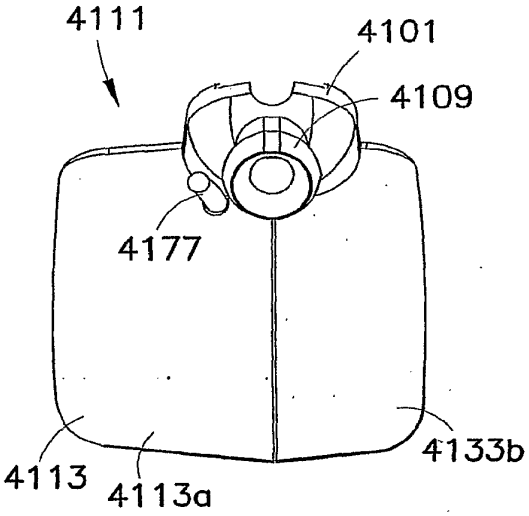

FIG. 45

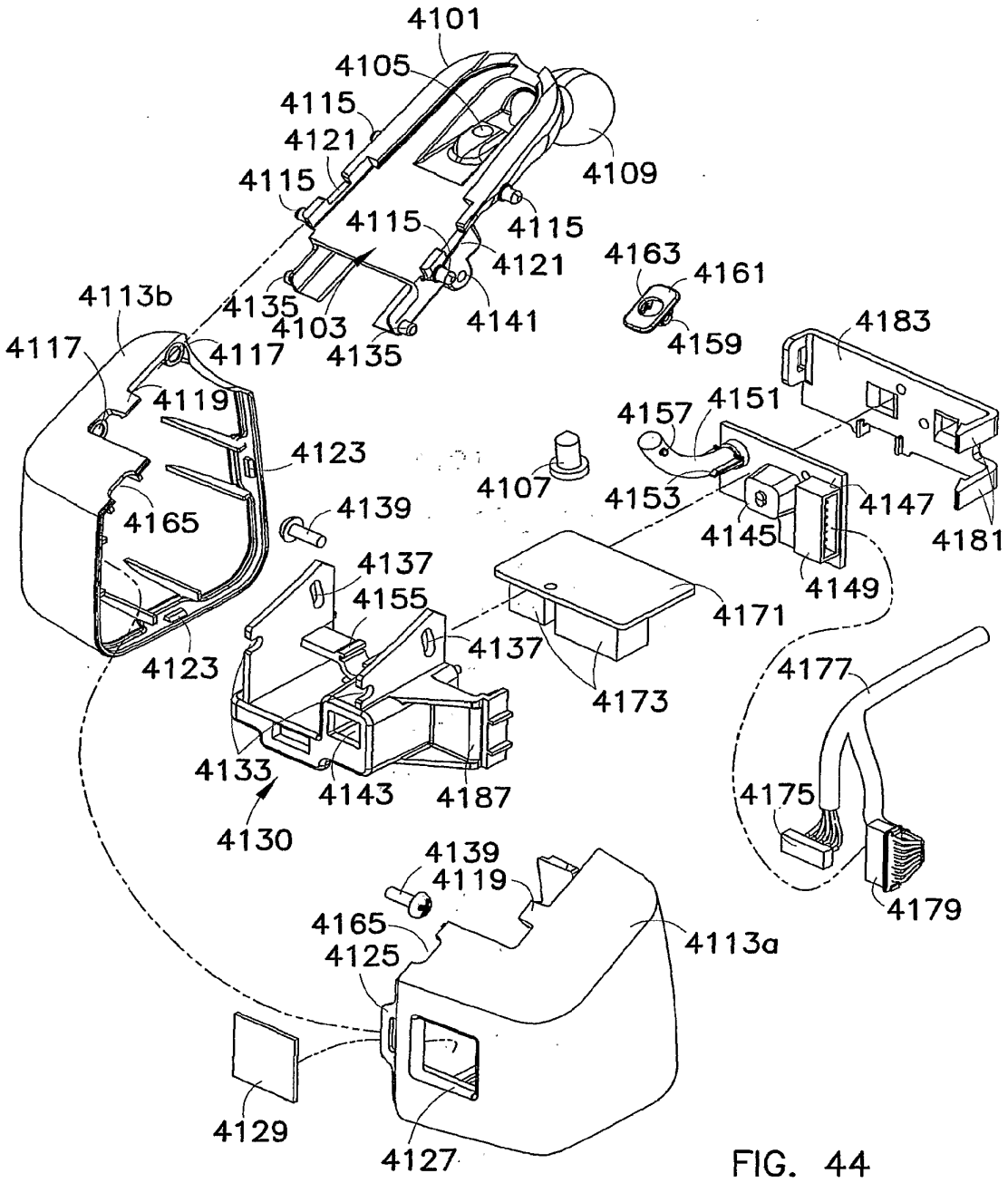
4101
4105
4115
4121
4115
4109
4115
4115
4121
4163
4161
4113b
4135
4103
4141
4159
4183
4117
4117
4135
4119
4157
4151
4123
4107
4153
4147
4165
4139
4145
4181
4137
4149
4155
4171
4137
4123
4173
4177
4133
4143
4187
4175
4130
4139
4119
4179
4165
4113a
4125
4129
4127

FIG. 44

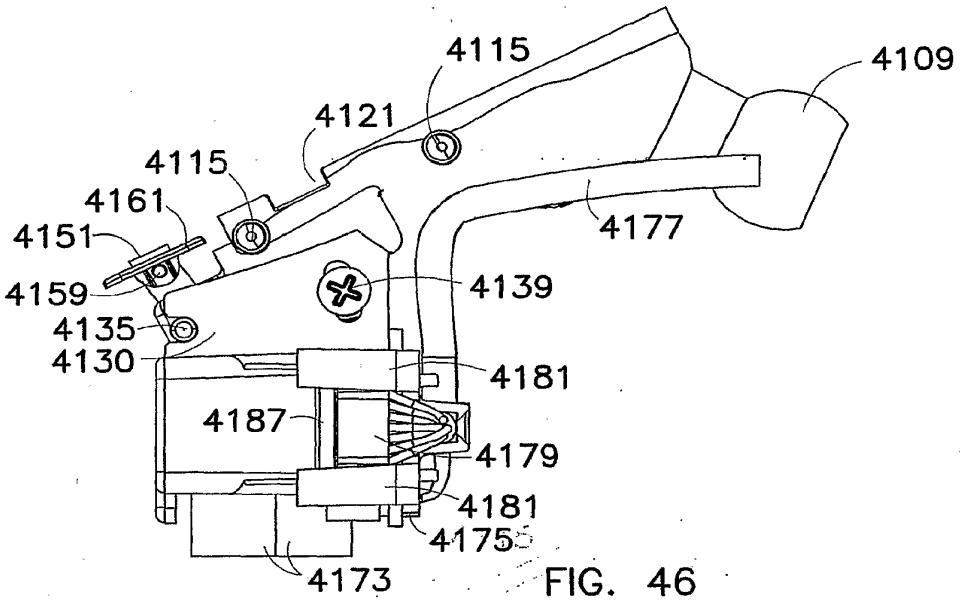
4115
4109
4121
4115
4161
4151
4177
4159
4139
4135
4130
4181
4187
4179
4181
4175
4173

FIG. 46

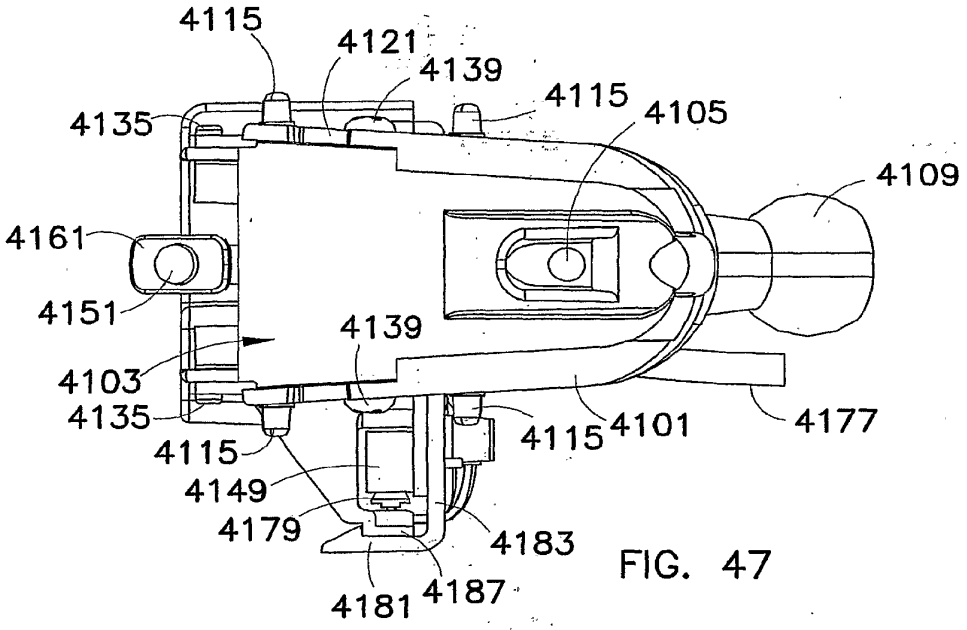
4115
4121
4139
4115
4105
4135
4109
4161
4151
4139
4103
4135
4115
4101
4177
4115
4149
4179
4183
4181
4187

FIG. 47

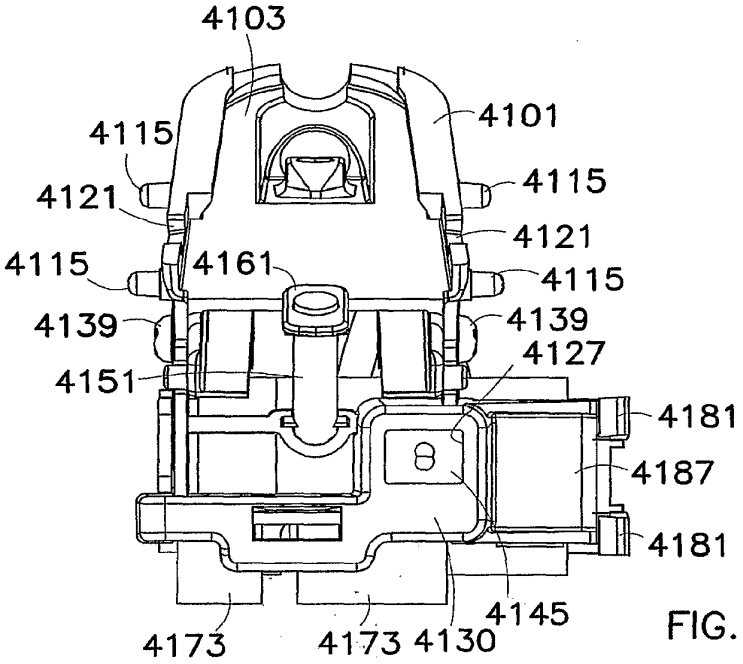
4103
4101
4115
4115
4121
4121
4115
4161
4115
4139
4139
4127
4151
4181
4187
4181
4145
4173
4173
4130

FIG. 48

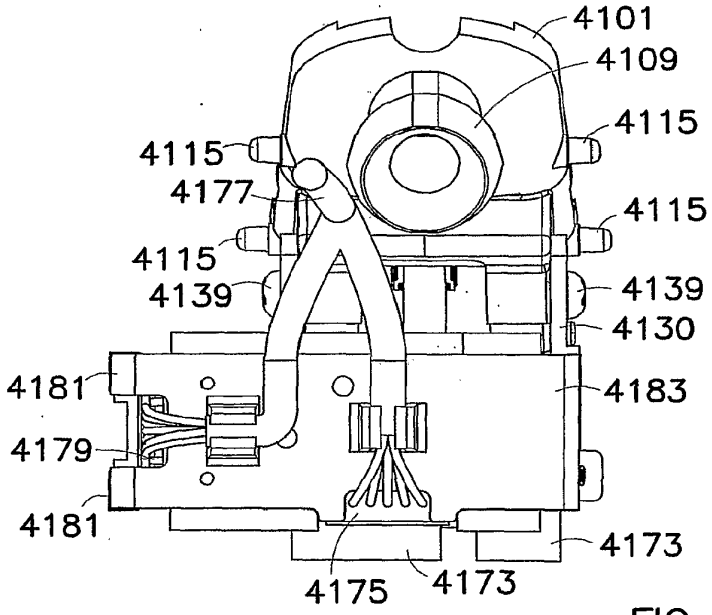
4101
4109
4115
4115
4177
4115
4115
4139
4139
4130
4181
4183
4179
4181
4173
4175
4173

FIG. 49

FIG. 50A

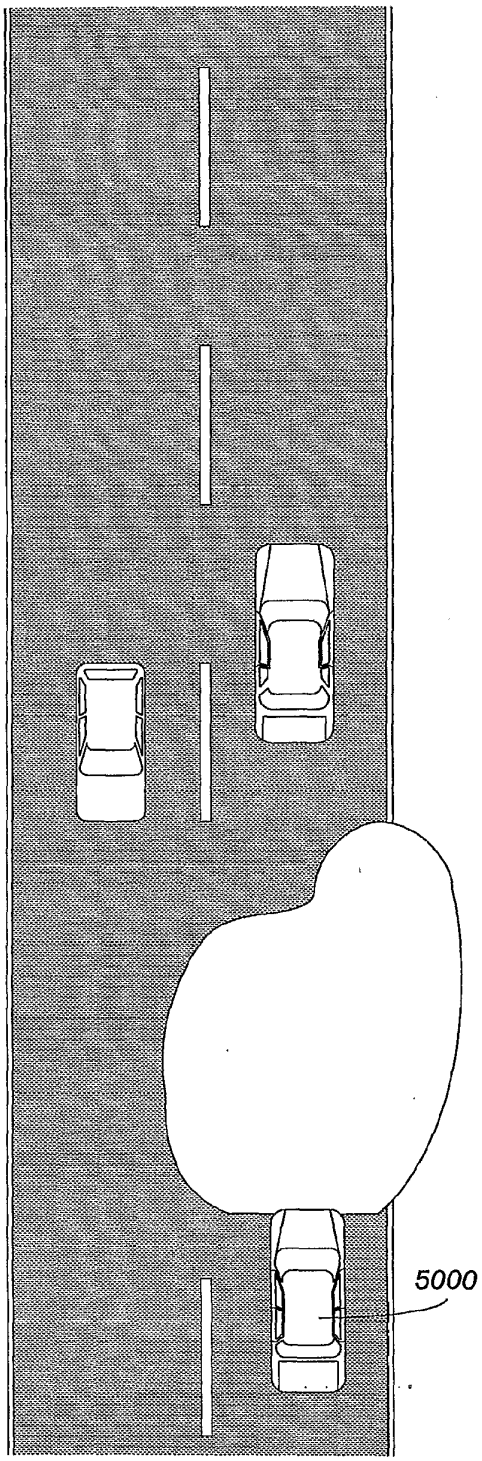

FIG. 50B

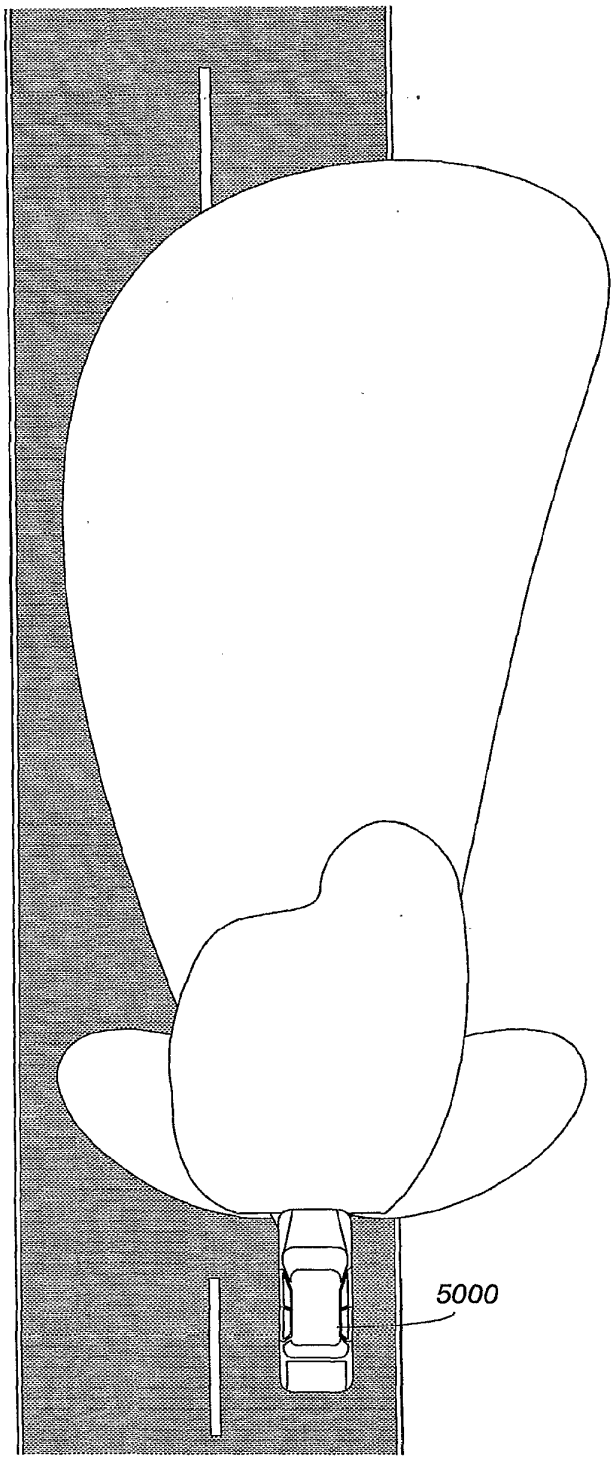

FIG. 50C

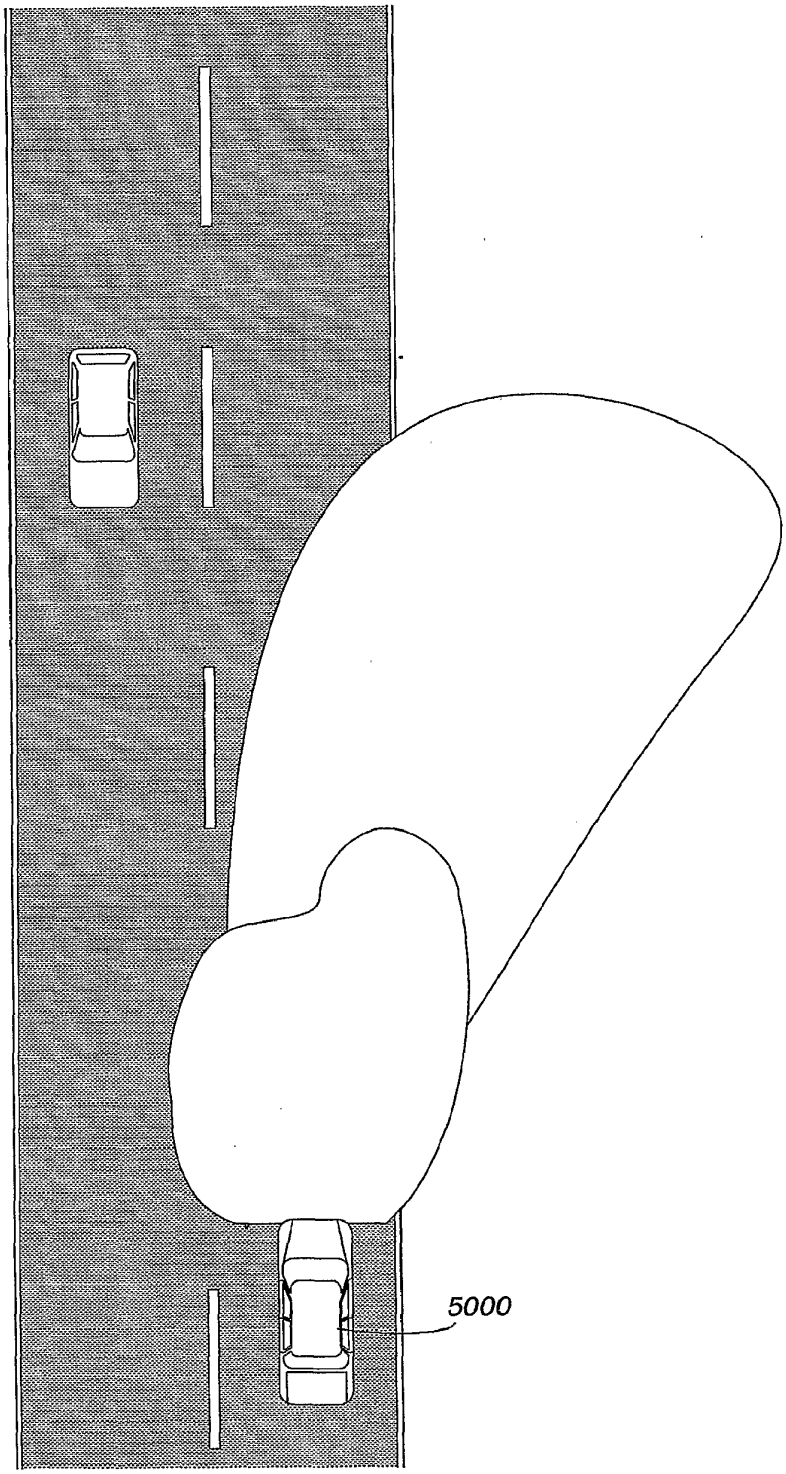

Exhibit PA-B

U.S. Patent No. 6,406,172

Harbers et al.

US006406172B1

(12) **United States Patent**
Harbers et al.

(10) **Patent No.: US 6,406,172 B1**
(45) **Date of Patent: Jun. 18, 2002**

(54) **HEADLAMP AND DYNAMIC LIGHTING SYSTEM FOR VEHICLES**

(75) Inventors: **Gerard Harbers**; **Simon H. A. Begemann**, both of Eindhoven (NL)

(73) Assignee: **Koninklijke Philips Electronics N.V.** (NL)

(*) Notice: Subject to any disclaimer, the term of this patent is extended or adjusted under 35 U.S.C. 154(b) by 0 days.

(21) Appl. No.: **09/599,792**

(22) Filed: **Jun. 22, 2000**

(30) **Foreign Application Priority Data**

Jun. 25, 1999 (EP) 99202054

(51) **Int. Cl.**[7] **F21V 29/00**

(52) **U.S. Cl.** **362/544**; 362/545; 362/230; 362/231; 362/464

(58) **Field of Search** 362/544, 545, 362/230, 231, 251, 464, 466

(56) **References Cited**

U.S. PATENT DOCUMENTS

5,136,483 A * 8/1992 Schoniger et al. 362/545
5,570,951 A * 11/1996 Bertling et al. 362/231
5,685,637 A 11/1997 Chapman et al. 362/263
5,798,911 A * 8/1998 Josic 362/466
5,876,113 A * 3/1999 Gotoh 362/466
5,931,572 A * 8/1999 Gotoh 362/466
6,220,722 B1 * 4/2001 Begemann 362/231
6,234,648 B1 * 5/2001 Borner et al. 362/235

* cited by examiner

Primary Examiner—Sandra O'Shea
Assistant Examiner—Ronald E. DelGizzi
(74) *Attorney, Agent, or Firm*—Dicran Halajian

(57) **ABSTRACT**

A headlamp (**2**; **3**) of a vehicle (**1**) has a light source (**4**; **5**) comprising a plurality of opto-electronic elements (**11**; **12**; **13**; **14**), preferably light-emitting diodes (LEDs). At least one of these opto-electronic elements (**11**; **12**; **13**; **14**) has, in operation, a luminous flux of 5 lm or higher. According to the invention, the spatial distribution of the light beam (**6**, **6'**, . . . ; **7**, **7'**, . . .) generated by the light source (**4**; **5**) is continuously adjustable. Preferably, the light source (**4**; **5**) comprises opto-electronic elements (**11**; **12**; **13**; **14**) only. Preferably, the spatial distribution is influenced by the speed of the vehicle (**1**), the rotational position of the steering wheel of the vehicle (**1**), the weather conditions, and it can also be influenced by the driver of the vehicle (**1**). Preferably, the spectral characteristics of the light beam (**6**, **6'**, . . . ; **7**, **7'**, . . .) generated by the light source (**4**; **5**) depend on the position in the light beam (**6**, **6'**, . . . ; **7**, **7'**, . . .). The light beam comprises at least two light beam segments (**6**, **6'**; **7**, **7'**) having essentially different spectral characteristics.

24 Claims, 5 Drawing Sheets

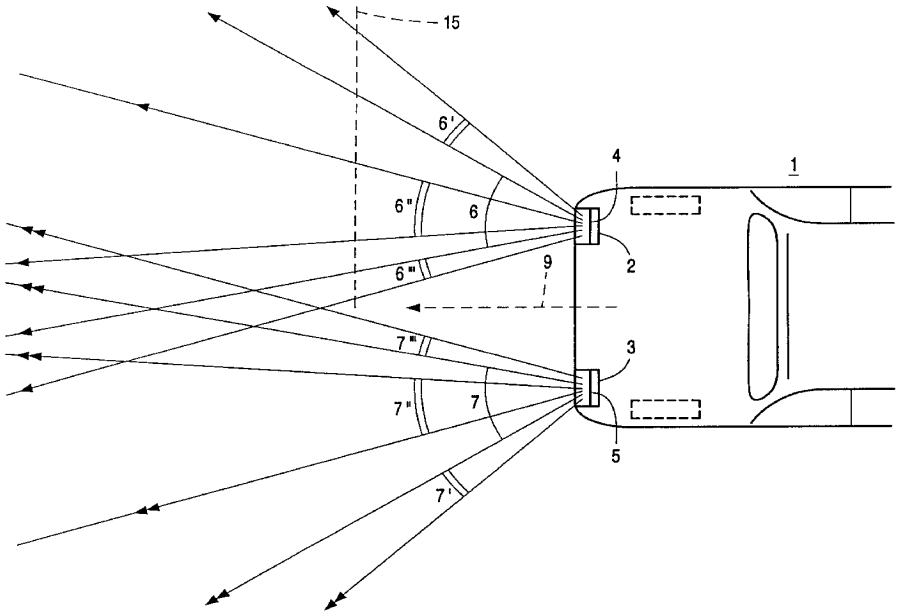

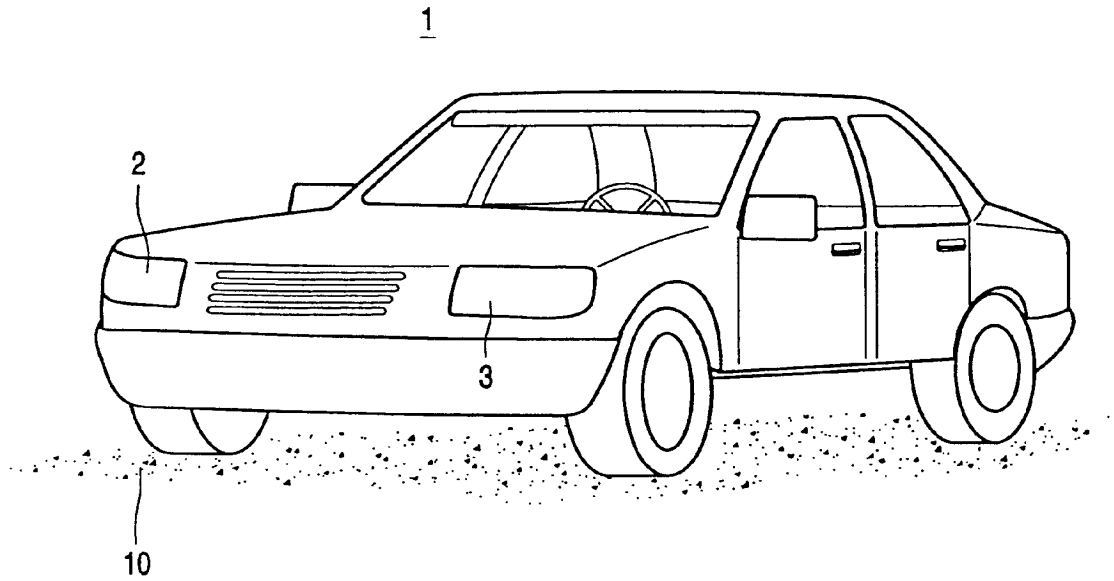

FIG. 1A

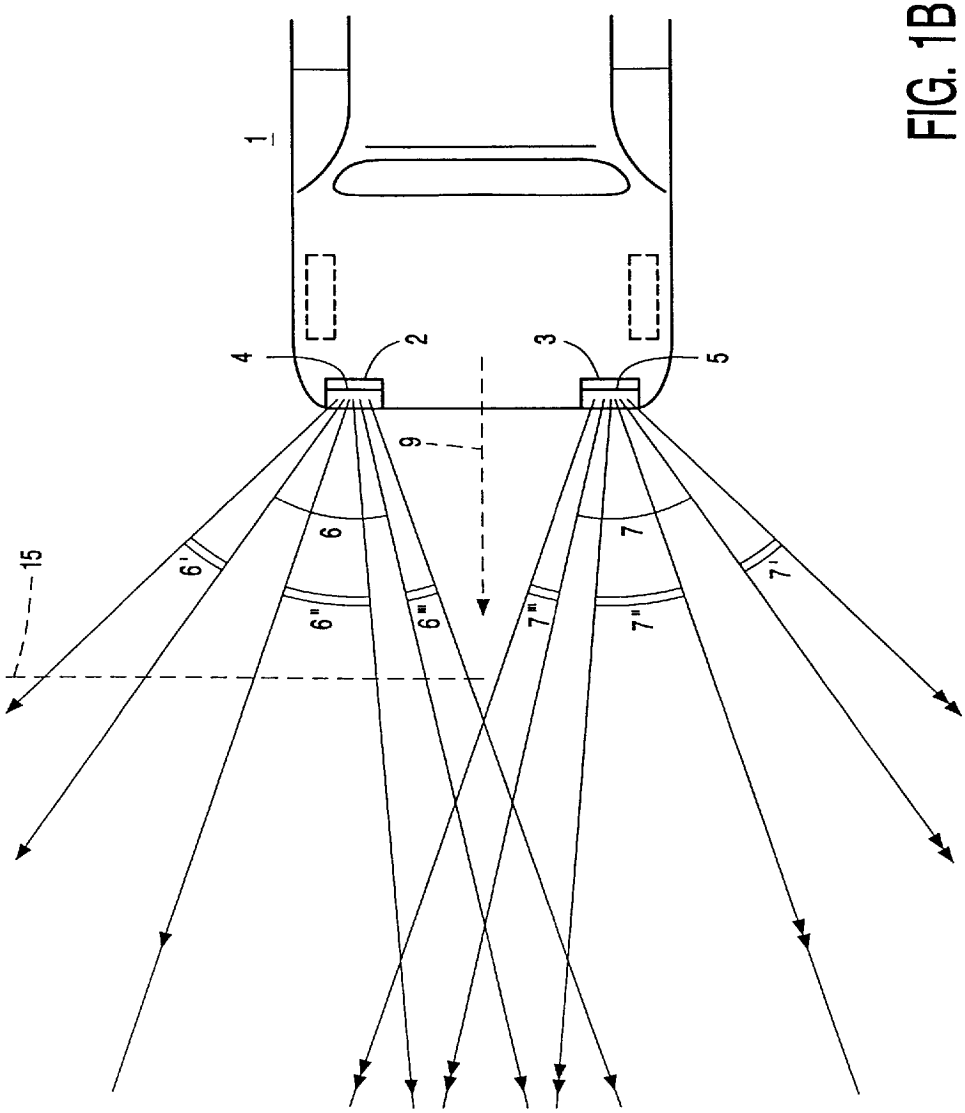

FIG. 1B

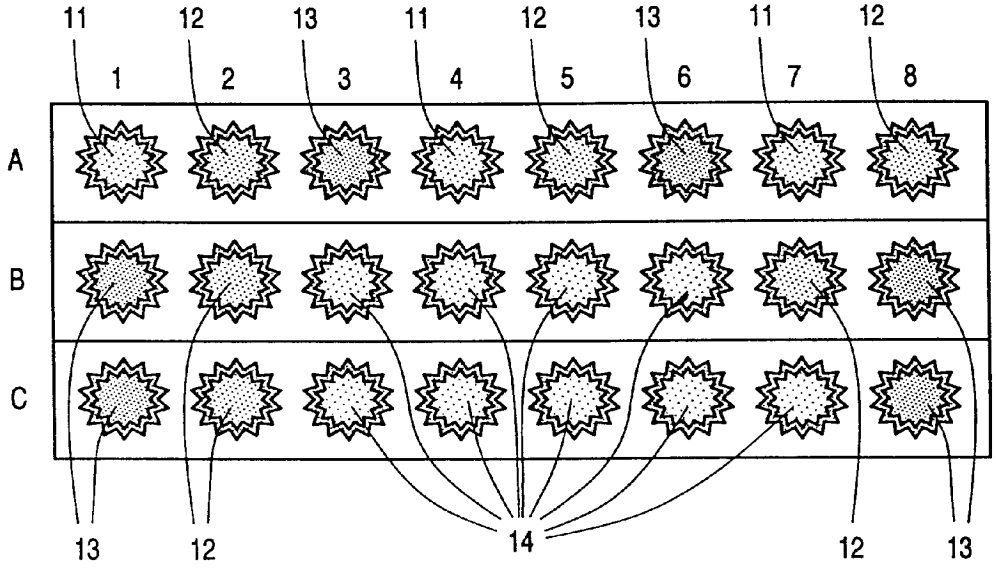

FIG. 2

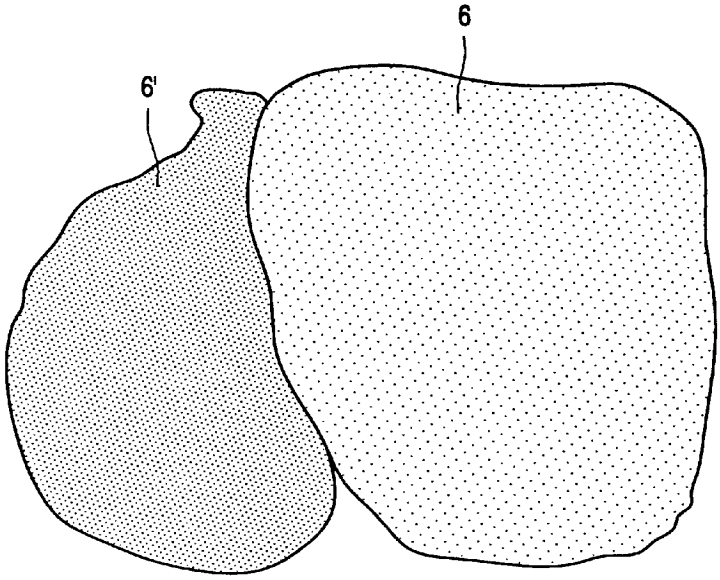

FIG. 3A

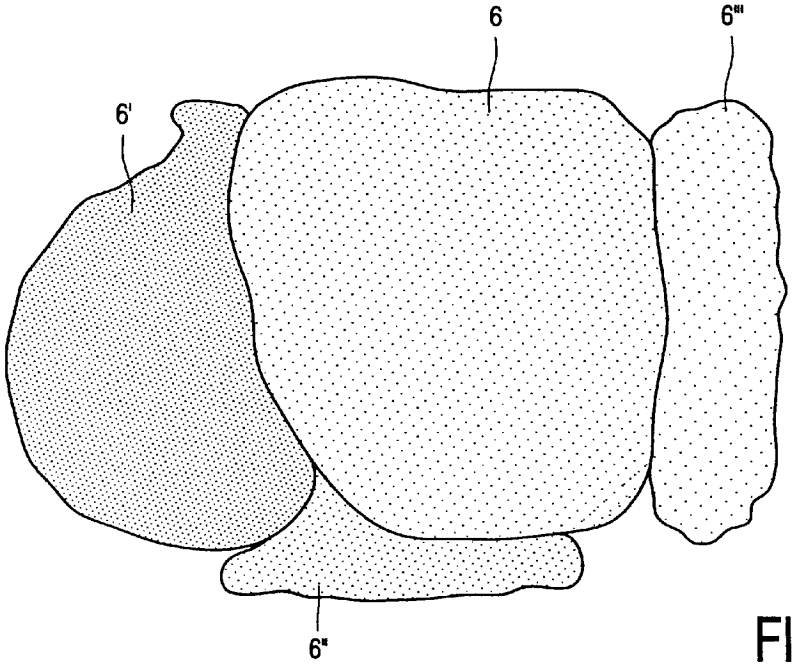

FIG. 3B

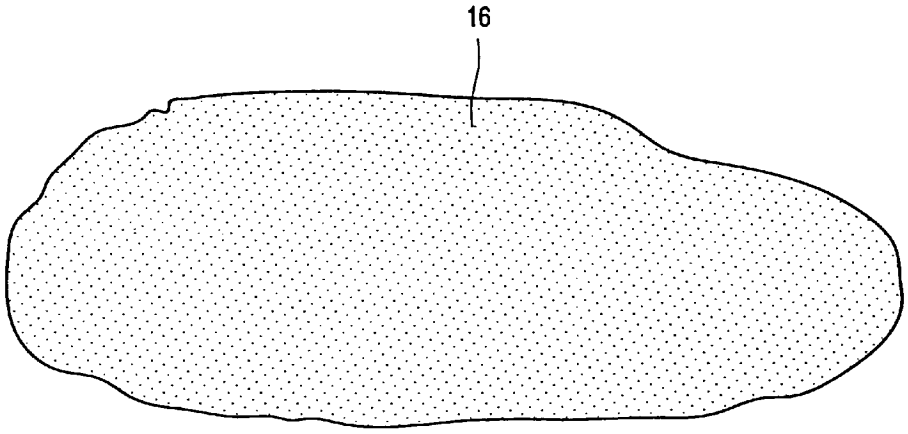

FIG. 4A

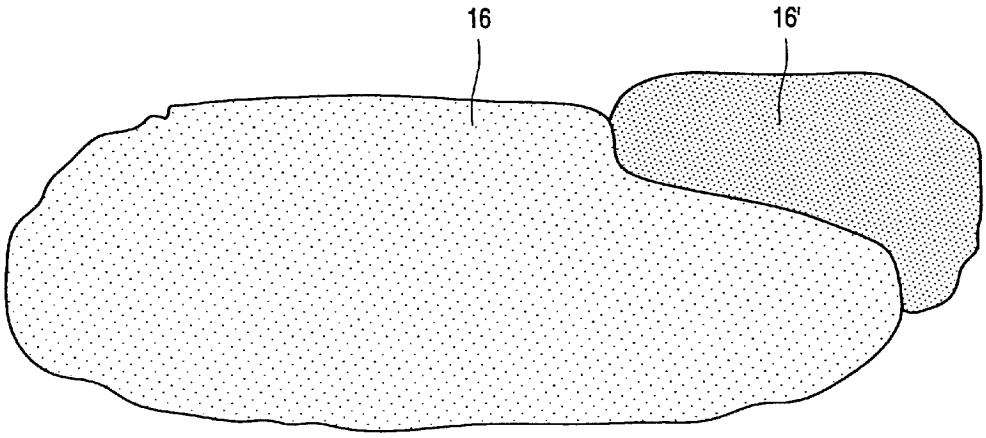

FIG. 4B

HEADLAMP AND DYNAMIC LIGHTING SYSTEM FOR VEHICLES

CROSS REFERENCE TO RELATED APPLICATION

Applicants' application Ser. No. 09/599,792 filed Jun. 22, 2000 discloses related subject matter.

BACKGROUND OF THE INVENTION

The invention relates to a vehicle headlamp comprising a light source which includes a plurality of opto-electronic elements.

The invention also relates to a vehicle provided with a headlamp.

Such headlamps are used on vehicles, such as cars, trucks, buses, bicycles and on vessels and aircraft.

Vehicle headlamps are known per se. A vehicle headlamp generally comprises an electric lamp with an incandescent body, for example, in a halogen-containing inert gas (a so-called halogen lamp), or an electric lamp with a pair of electrodes in an ionizable gas (a so-called discharge lamp). Such headlamps are customarily built up of two light sources which, in operation, generate either a so-called passing beam or a so-called main beam. Vehicle headlamps are known wherein the light source for the passing beam and the light source for the main beam are housed in a single lamp vessel (the so-called H4). Other known vehicle headlamps are those wherein two types of light sources are used, for example a halogen lamp in combination with a discharge lamp. There are also headlamps which, in operation, generate colored light, which is generally brought about by a suitable coating provided on an outer surface of the lamp vessel. U.S. Pat. No. 5,685,637 discloses a vehicle headlamp wherein a halogen lamp is combined with a ring of light-emitting diodes (LEDs).

The known vehicle headlamp has the drawback that, in principle, it constitutes a static lighting system.

SUMMARY OF THE INVENTION

It is an object of the invention to provide a vehicle headlamp of the type described in the opening paragraph, which exhibits more dynamic lighting possibilities.

To achieve this, the vehicle headlamp is characterized in accordance with the invention in that

- a luminous flux of at least one of the opto-electronic elements amounts, in operation, to at least 5 lm,
- and in that a light beam generated by the light source has a continuously adjustable spatial distribution.

Opto-electronic elements, also referred to as electro-optical elements, for example electroluminescent elements, such as light-emitting diodes (LEDs) with a luminous flux of 5 lm or more can suitably be used as a light source for vehicle headlamps. A relatively high luminous flux is necessary to ensure that also under ambient light conditions, for example sunlight or light originating from headlamps of other vehicles, sufficient light is generated so that a light beam generated by the light source can be observed sufficiently clearly from a distance.

To generate a so-called passing beam and/or a so-called main beam, a conventional vehicle headlamp requires a luminous flux ranging between 600 and 1000 lm to meet internationally standardized and specified light beam intensities. Current technology of opto-electronic elements, particularly that of light-emitting diodes, has yielded two different material systems which can suitably be used for different regions of the visible spectrum, i.e. Al-In-Ga-N for blue-green light and Al-In-Ga-P for yellow-red light. As a result, any desired spectral characteristic can be produced by combining suitable light-emitting diodes.

The use of a plurality of opto-electronic elements with a relatively high luminous flux enables a vehicle headlamp to be manufactured having much more dynamic lighting possibilities than the known vehicle headlamp. The opto-electronic elements can be switched on and switched off, with the spatial distribution of the generated light beam depending on the conditions. Said conditions may be influenced by conditions outside the vehicle, the so-called external conditions. External conditions include, for example, the general lighting level (day or night situation), the shape of the road (width, number of bends), the weather conditions (bright weather, fog, rain, snow, etc.) and the velocity at which and/or the direction in which the vehicle is moving. Conditions which also influence the spatial distribution may be determined by conditions inside the vehicle, the so-called internal conditions. Internal conditions include, for example, the shapes of the light beam as set or desired by the driver.

In the description of the current invention, a light beam having a continuously adjustable spatial distribution is to be taken to mean that the opto-electronic elements can be switched on and off in such a manner that the light beam can assume various shapes, which shapes may demonstrate a partial overlap and may, more or less gradually, merge. The luminous flux of the opto-electronic elements may be changed with respect to each other. If a light beam is adjustable, also the intensity and/or spectral characteristic of the light beam, or of segments of the light beam, may be different.

Since the spatial distribution is (continuously) adjustable, the driver's view of the road and the surroundings of the vehicle is improved. On the one hand, objects situated on or in the axis of the light beam, such as oncoming traffic, can be better observed. On the other hand, also the observation of objects outside the center of the light beam is improved. This observation of objects outside the center of the light beam is also referred to as off-axis viewing, as opposed to the so-called on-axis viewing, which refers to the visibility of objects which are situated in the center, or in the immediate vicinity of the center, of the light beam. Examples of off-axis viewing include the observation of objects situated at or near the edge of the field of vision of the driver of the vehicle, for example the shoulder of the road, (unlit) objects, such as pedestrians or cyclists at the edge of the road on which the vehicle is traveling, and the observation of vehicles traveling on a road which crosses the road on which the vehicle provided with the headlamp in accordance with the invention is traveling.

The known vehicle headlamp has two light sources, namely a halogen lamp and a ring of light-emitting diodes, however, the halogen lamp produces a light beam of visible light and the LEDs emit infrared light at 880 nm. The individual light beams of the known vehicle headlamp are static in character and the light beam generated by the light source does not have a continuously adjustable spatial distribution.

An embodiment of the vehicle headlamp is characterized in accordance with the invention in that the light source consists of a plurality of opto-electronic elements. Consequently, the vehicle headlamp is composed of one type of light source. By combining LEDs or so-called multi-chip packages having a luminous flux in the range from 10–250 lm, the luminous flux of a suitable combination of 25 such

elements, or fewer, preferably a combination of 15 such elements, or fewer, such as a combination of four such elements, meets the international standard ranging between 600 and 1000 lm. The dimensions of a vehicle headlamp comprising such a relatively small number of opto-electronic elements are comparable to the dimensions of a conventional vehicle headlamp. An additional advantage of the use of LEDs is that the service life of these opto-electronic elements is very long as compared to that of the conventional vehicle headlamp.

In a preferred embodiment of the vehicle headlamp in accordance with the invention, the spatial distribution of the light beam can be influenced by the velocity of the vehicle. In this manner, the range and the width of the light beam can be adjusted as a function of the velocity of the vehicle. At relatively low velocities, it is desirable for the light distribution of the light beam to be wider, so that, for example, also the shoulders of the road are illuminated. The higher the velocity of the vehicle, the longer the braking distance of the vehicle will be in general, so that it is desirable for the range of the light beam to increase. It may also be desirable for the width of the light beam to decrease and/or the intensity distribution between on-axis viewing and off-axis viewing to change. By switching on or off one or more opto-electronic elements at specific limiting values of the velocity of the vehicle, a continuously adjustable spatial distribution of the light emitted by the vehicle headlamp is obtained.

An embodiment of the vehicle headlamp is characterized in accordance with the invention in that the spatial distribution of the light beam can be influenced by the rotational position of a steering wheel of the vehicle. This enables the spatial distribution of the light beam of the vehicle headlamp to be adapted to the position of the steering wheel of the vehicle. The light beam "rotates" simultaneously, as it were, with the desired direction of movement of the vehicle. When the steering wheel is rotated it may be desirable for the intensity of the light beam shining in a straight line to decrease. By switching on or off one or more opto-electronic elements at specific limiting values of the rotational position of the steering wheel of the vehicle, a continuously adjustable spatial distribution of the light emitted by the vehicle headlamp is obtained.

In a favorable embodiment of the vehicle headlamp in accordance with the invention, the spatial distribution of the light beam can be influenced by the weather conditions. Under unfavorable weather conditions, in particular fog and snow, when the visibility is reduced by backscattering from fog or snow particles, the shape of the light beam can be adapted by activating different combinations of opto-electronic elements and by changing the output levels of the different opto-electronic elements. As a result of these adaptations, the overall spatial distribution of the light is changed.

An embodiment of the vehicle headlamp is characterized in accordance with the invention in that the spatial distribution of the light beam can be influenced by a driver of the vehicle. This enables the spatial distribution, for example the range and/or the width of the light beam, to be adjusted by the driver. As a result of information regarding, for example, the road type (for example a relatively narrow country road or a broad multi-lane motorway), the presence of bends and the possibility of oncoming traffic, it becomes desirable to make the light distribution driver-adjustable. On a country road, it is desirable to have a relatively broad light distribution of the light beam, so that also the shoulders of the road are clearly illuminated. On a motorway, where it is likely that there will be oncoming traffic, the degree to which the vehicle headlamp dazzles should not be too high, which is achieved in that the driver adjusts the light beam so as to be relatively narrow.

An alternative embodiment of the vehicle headlamp is characterized in accordance with the invention in that the spectral characteristic of a light beam generated by the light source depends upon the position in the light beam. By making the spectral characteristic of the light beam generated by the light source dependent on the position in the light beam, objects situated outside the center of the light beam can be better observed. Preferably, the light beam comprises at least two beam segments having a substantially different spectral characteristic. In general, the intensity of the light beam emitted by a vehicle headlamp decreases as a function of the position in the light beam, i.e. the intensity is maximal in the center of the light beam and gradually decreases in the direction of positions situated at a larger distance from the center of the light beam. As a result, the intensity of the light for so-called on-axis viewing is relatively much higher than for the so-called off-axis viewing.

It is well-known that the sensitivity of the human eye changes with the wavelength of the light and that equal quantities of energy of different wavelengths generally cause different sensations of brightness. In other words, if we consider a spectrum, and the received energy (per unit of time) is equal for all wavelengths, the middle of the visible region will apparently be brighter than the red and the blue ends. If the intensity of the light is relatively high (luminous efficiency $\geqq 3.5$ cd/m^2), the maximum of the brightness lies at a wavelength of 555 nm (green/yellow), the so-called photopic eye-sensitivity curve. At this wavelength, particularly the cones are active in the human eye. If the intensity of the light is relatively low (luminous efficiency $\leqq 0.035$ cd/m^2), the maximum of the brightness lies at a wavelength of 507 nm (blue/green or cyanblue), the so-called scotopic eye-sensitivity curve. At this wavelength, particularly the rods are active in the human eye.

It is advantageous to bring about substantially different spectral characteristics of the light beam for the on-axis and the off-axis parts of the light beam. In particular, in the off-axis parts of the light beam, the spectral characteristic of the light is adapted to a light intensity which is relatively low. By thus making the spectral characteristic of the light beam generated by the light source dependent upon the position in the light beam, the visibility of objects situated outside the center of the light beam is improved.

It is noted that, in practice, also photopic and scotopic light beams preferably have a broad spectrum, which light beams both have a more or less "white" appearance. The difference between a photopic and a scotopic light beam corresponds, as it were, to a difference between a light beam having a high and a low color temperature.

There is a possibility that the above-mentioned beam segments may comprise segments demonstrating a partial overlap. A possibly non-continuous transition between the beam segments may be perceived as unpleasant by the driver of the vehicle.

Preferably, a first beam segment has a spectral characteristic which is rich in green-yellow light, and a second beam segment has a spectral characteristic which is rich in blue-green light. On the one hand, in the on-axis part of the light beam (the first beam segment) a spectral characteristic of the light is presented which is adapted to the photopic eye-sensitivity curve, i.e. rich in green-yellow light. On the other hand, in the off-axis parts of the light beam (the second beam segment) a spectral characteristic of the light is presented which is adapted to the scotopic eye-sensitivity curve, i.e. rich in blue-green light.

These and other aspects of the invention will be apparent from and elucidated with reference to the embodiments described hereinafter.

BRIEF DESCRIPTION OF THE DRAWINGS

FIG. **1**A is a perspective view of a vehicle provided with a headlamp in accordance with the invention;

FIG. **1**B is a plan view of a part of the vehicle shown in FIG. **1**A; and

FIG. **2** is a sectional view of a light source comprising a plurality of opto-electronic elements arranged in accordance with a regular pattern;

FIG. **3**A shows a light beam generated by a first beam segment in combination with a so-called off-axis light beam generated by a second beam segment;

FIG. **3**B shows the light beams of FIG. **3**A and two additional light beams for improving the on-axis observation conditions;

FIG. **4**A shows a relatively broad light beam which predominantly consists of yellow light, and

FIG. **4**B shows the relatively broad light beam of FIG. **4**A in combination with a side light beam dependent upon the position of the steering wheel of the vehicle.

These Figures are purely diagrammatic and not drawn to scale. Particularly for clarity, some dimensions are exaggerated strongly. In the Figures, like reference numerals refer to like parts whenever possible.

DETAILED DESCRIPTION OF THE PREFERRED EMBODIMENT

FIG. **1**A is a very diagrammatic, perspective view of a vehicle **1** situated on a road **10** and provided with a headlamp **2**; **3** in accordance with the invention. FIG. **1**B is a diagrammatic, plan view of a part of the vehicle **1** shown in FIG. **1**A. Each one of the vehicle headlamps **2**; **3** is provided with a light source **4**; **5**, which emits (diverging) light beams **6**, **6'**, . . . ; **7**, **7'**, . . . in a longitudinal direction **9**. FIG. **1**B further shows an imaginary screen **15** for trapping the light emitted by the light beams **6**, **6'**. In accordance with the invention, the spatial distribution of the light beams **6**, **6'**, . . . ; **7**, **7'**. . . generated by the light source **4**; **5** is continuously adjustable.

In the example shown in FIG. **1**B, each one of the light beams originating from the light source **4**; **5** of the vehicle headlamp **2**; **3** is subdivided into four beam segments **6**, **6'**, **6"**, **6'"**; **7**, **7'**, **7"**, **7'"**, namely in:

- a first beam segment **6**; **7** comprising a relatively wide, central part of the light beam, which first beam segment **6**; **7** comprises a kind of passing beam;
- a second beam segment **6'**, **7'** comprising a part of the light beam which is directed in particular towards the edge of the road (the shoulder of the road);
- a third beam segment **6"**; **7"** comprising a relatively narrow part of the light beam, which is directed particularly towards the center of the road, and the direction of which may be dependent upon the rotational position of the steering wheel of the vehicle;
- and a fourth beam segment **6'"**; **7'"** comprising a relatively narrow central part of the light beam, which fourth beam segment **6'"**; **7'"** comprises a kind of main beam, the spectral characteristic of the fourth beam segment **6'"**; **7'"** differing substantially from the spectral characteristic of the other beam segments **6**, **6'**, **6"**; **7**, **7'**, **7"**.

The light beams may also be composed of more than four beam segments, for example five or more beam segments having different spatial distributions and/or different spectral characteristics. In general, the light originating from two or more beam segments demonstrates an overlap. Partly because of the generally diverging character of the light beams, overlap between the various beam segments **6**, **6'**, **6"**, **6'"**; **7**, **7'**, **7"**, **7'"** is unavoidable.

FIG. **2** is a sectional view of the light source **4** comprising a plurality of opto-electronic elements **11**; **12**; **13**; **14** which are arranged in accordance with a regular pattern. Similarly, a plurality of opto-electronic elements may be provided in the light source **5** (not shown). The pattern in which the opto-electronic elements are arranged in light source **4** may differ from that in light source **5**. For example, for reasons of symmetry, the pattern in which the opto-electronic elements are arranged in the light source **5** may be mirror-inverted with respect to that in light source **4**. In addition, the number of opto-electronic elements **11**; **12**; **13**; **14** in light source **4** does not have to be equal to that in light source **5**. The array of opto-electronic elements **11**; **12**; **13**; **14** does not have to be provided on a flat substrate, it may alternatively be provided on a curved substrate. The shape of the substrate on which the array of opto-electronic elements **11**; **12**; **13**; **14** is provided is determined to a substantial degree by the desired direction of the light beams emitted by the various opto-electronic elements **11**; **12**; **13**; **14**.

In accordance with the invention, the luminous flux of at least one of the opto-electronic elements **11**; **12**; **13**; **14** is at least 5 lm, in operation. Preferably, in operation, all opto-electronic elements **11**; **12**; **13**; **14** have a luminous flux above 5 lm. Preferably, the vehicle headlamp **2**; **3** is composed of a single type of light source **4**; **5**. In other words, the light source **4**; **5** is preferably exclusively composed of a plurality of opto-electronic elements **11**; **12**; **13**; **14**.

If opto-electronic elements with a luminous flux of 5 lm or more are to be efficiently employed, it is desirable to provide the vehicle headlamp with heat-dissipating means. For example, the substrate on which the opto-electronic elements **11**; **12**; **13**; **14** are provided may consist of a metal or a metal alloy. As a result, a good heat conduction from the opto-electronic elements **11**; **12**; **13**; **14** to the substrate is achieved.

In the example shown in FIG. **2**, the light source **4**; **5** is exclusively composed of a plurality of light-emitting diodes (LEDs). In this example an array of 8×3 LEDs. For identification purposes, in FIG. **2**, the rows are indicated by letters A, B, C, and the columns by digits 1–8. By using LEDs or so-called multi-chip packages with a luminous flux in the range from 10–250 lm for blue, yellow/orange, red and green light, the luminous flux of a suitable combination of 25 such elements, or fewer, preferably a combination of 15 such elements, or fewer, for example a combination of 4 such elements meets the internationally standardized and specified intensities for generating the passing beam and/or the main beam, which intensities range between 600 and 1000 lm. The dimensions of a vehicle headlamp **2**; **3** having such a relatively small number of opto-electronic elements **11**; **12**; **13**; **14** are comparable to, or much smaller than, the dimensions of a conventional vehicle headlamp.

By using a plurality of opto-electronic elements **11**; **12**; **13**; **14**, and by selectively switching on and off a number of opto-electronic elements **11**; **12**; **13**; **14**, the light beams generated by the light source **4**; **5** can be relatively readily subdivided into one or more beam segments **6**, **6'**; **7**, **7'** having a different spatial distribution or substantially different spectral characteristics. The vehicle **1** or the headlamp **2**; **3** is preferably provided with means (not shown) for changing the luminous flux of the opto-electronic elements **11**; **12**; **13**; **14** with respect to each other.

In the example shown in FIG. **2**, red LEDs are indicated by reference numeral **11**, green LEDs by reference numeral **12**, blue LEDs by reference numeral **13**, and yellow or white LEDs by reference. numeral **14**. By ordering the LEDs in the manner indicated in FIG. **2**, a substantial reduction of possible color effects is achieved for an observer looking into the light emitted by the vehicle headlamp (for example an oncoming car). In addition, optical systems which effectively mix the colors originating from the LEDs are available. This is important, in particular, to ensure that the red LEDs are not mistakenly taken for brake lights.

The example of the array of LEDs as shown in FIG. **2** represents an integrated module generating at least four types of light beams, namely various light beams which are switched on or off in dependence upon the velocity of the vehicle (sidelamps, passing beam, main beam), light beams which are switched on in dependence upon the rotational position of the steering wheel, light beams for bad weather conditions, and light beams which are specially adapted for use in areas where the intensity of the light is relatively low.

The ordering, providing and selectively switching on and off of opto-electronic elements **11**; **12**; **13**; **14** in the form of an array may also be considered as an invention in itself.

FIG. **3**A shows a light beam generated by a first beam segment **6** in combination with a so-called off-axis light beam generated by a second beam segment **6**'. The light originating from the beam segments **6**, **6**' is trapped by the imaginary screen **15** (see FIG. **1**B), in which case an observer looks against the longitudinal direction **9**. With reference to FIG. **2**, the first, so-called on-axis beam segment **6**, is generated by light beams originating from LEDs A**1**–A**8** and B**3**–B**5**, while the second, so-called off-axis beam segment **6**', is generated by light beams originating from LEDs B**1**, B**2**, C**1** and C**2**. The other LEDs, as shown in FIG. **2**, are switched off under these lighting conditions.

FIG. **3**B not only shows the light beams shown in FIG. **3** but also two additional light beams which predominantly serve to improve the on-axis observation conditions. By additionally switching on the yellow or white LEDs C**3**–C**5**, a third beam segment **6**" is obtained, and by additionally switching on the yellow or white LEDs B**6**, C**6** and C**7**, a fourth beam segment **6**'" is obtained. The spectral characteristics of the first beam segment **6** and the third and fourth beam segment **6**", **6**'" may be different. For example, it may be desirable to increase, in the beam segment **6**", the quantity of in particular yellow light in order to improve the long-distance visibility. It may also be desirable, upon switching on the main beam (beam segment **6**"), to switch off a part of the passing beam (beam segment **6**) and/or of the off-axis beam segment **6**'.

In order to improve the visibility of the surroundings of the vehicle **1**, a substantially different spectral characteristic of the light beam is brought about between the on-axis parts and the off-axis parts of the light beam. In particular, in the off-axis beam segment **6**', **7**' of the light beam, the spectral characteristic of the light is adapted to a light intensity which is relatively low. To obtain a good observation field at relatively low light intensities, preferably the spectral characteristic of one of the beam segments **6**'; **7**' is mesotopically tuned. This can be achieved by providing the first beam segment **6**; **7** and the third and fourth beam segments **6**", **6**'"; **7**", **7**'" with a spectral characteristic which is rich in white or yellow-orange light and by providing the second beam segment **6**', **7**' with a spectral characteristic which is rich in blue-green light. By thus rendering the spectral characteristic of the light beam generated by the light source dependent upon the position in the light beam, objects situated outside the center of the light beam are better observed.

Under unfavorable weather conditions, in particular fog and snow, when visibility is reduced by backscattering caused by fog or snow particles, both the configuration and the spectral composition of the light beams generated by the light source **4**; **5** can be adapted by activating different combinations of LEDs and by changing the output levels of the various LEDs. As a result of these adaptations, the spatial and/or spectral distribution of the light is changed. An example of such an adaptation is shown in FIG. **4**A, wherein a relatively wide beam **16** is obtained which is substantially composed of yellow light. The absence of the blue component in the visible light causes the effect of backscattering to be substantially reduced.

FIG. **4**B shows the relatively wide beam **16** of FIG. **4**A in combination with a side light beam **16**' whose shape and intensity and position are dependent upon the position of the steering wheel of the vehicle **1**. Such a side light beam **16**' is preferably not switched on until the steering wheel of the vehicle exceeds a predetermined limiting angle when taking a bend or turning off. In this manner, the surface area and space wherein the vehicle is situated and where the vehicle is heading are dynamically illuminated as early as possible.

In general, the LED modules operate at a low-voltage direct current, so that they can be advantageously employed in a vehicle.

It will be obvious that within the scope of the invention many variations are possible to those skilled in the art. For example, the vehicle headlamp may have many different shapes, such as (rect)angular, round, oval, etc. One or more opto-electronic elements may also be suitable for use as indicator. In principle, the dimensions of the light beams are adjustable at will, for example, by creating a broader light beam (illuminating the shoulder of the road) at a lower speed of the vehicle, or by narrowing the beam at a relatively high speed. In addition, as a result of the large freedom of choice resulting from the use of (exclusively) opto-electronic elements, the location of the vehicle headlamp is no longer limited to the conventional location (at the front of the vehicle just above the road surface). It may be desirable to provide at least a part of the opto-electronic elements near the windscreen of the vehicle **1**. It is also possible to provide a further part of the opto-electronic elements on a side face of the vehicle. A future increase in the efficiency and light output of the LEDs will enable the number of LEDs to be further reduced.

The scope of protection of the invention is not limited to the above examples. The invention is embodied in each novel characteristic and each combination of characteristics. Reference numerals in the claims do not limit the scope of protection thereof. The use of the term "comprising" does not exclude the presence of elements other than those mentioned in the claims. The use of the word "a" or "an" before an element does not exclude the presence of a plurality of such elements.

What is claimed is:

1. A headlamp of a vehicle comprising a light source which includes a plurality of opto-electronic elements, wherein:

a luminous flux of at least one of the opto-electronic elements amounts, in operation, to at least 5 lm,

the opto-electronic elements form an array distributed evenly on a surface of the light source, and

a light beam generated by the light source has a continuously adjustable spatial distribution.

2. A vehicle headlamp as claimed in claim **1**, wherein the light source consists of a plurality of opto-electronic elements.

3. A vehicle headlamp as claimed in claim 1, wherein the intensities of the light emitted by the opto-electronic elements are adjustable so that the range of said beam varies directly and the width of said beam varies inversely with the velocity of the vehicle.

4. A vehicle headlamp as claimed in claim 1, wherein the intensities of the light emitted by the opto-electronic elements are adjustable so that the spatial distribution of said beam follows the rotational position of a steering wheel of the vehicle.

5. A vehicle headlamp as claimed in claim 1, wherein the intensities of the light emitted by the opto-electronic elements are adjustable to decrease backscattering of said light beam by fog or snow particles in accordance with weather conditions.

6. A vehicle headlamp as claimed in claim 1, wherein the intensities of the light emitted by the opto-electronic elements are adjustable by a driver of the vehicle to control the distribution of said light beam.

7. A vehicle headlamp as claimed in claim 1, wherein the intensities of the light emitted by the opto-electronic elements are varied on said surface of the light source so that the spectral characteristic of said light beam is different at different points in a plane which is transverse to the light beam.

8. A vehicle headlamp as claimed in claim 7, wherein the light beam comprises at least two beam segments, each having a substantially different spectral characteristic from the other.

9. A vehicle headlamp as claimed in claim 8, wherein a first beam segment has a spectral characteristic which is rich in green-yellow light, and a second beam segment has a spectral characteristic which is rich in blue-green light.

10. A vehicle headlamp as claimed in claim 1, wherein the opto-electronic elements comprise light-emitting diodes.

11. A vehicle headlamp as claimed in claim 1, wherein the surface of the light source is curved.

12. A vehicle headlight comprising a light source comprising a plurality of opto-electronic elements , wherein:

the opto-electronic elements form an array on a surface of the light source, said surface having a periphery, said array not being confined to the periphery of said surface, and

each said opto-electronic element is adjustable to emit light of variable intensity,

whereby a light beam generated by the light source has a continuously adjustable spatial distribution.

13. A headlamp of a vehicle comprising a light source which includes a plurality of opto-electronic elements, wherein

the opto-electronic elements are arrayed in columns and rows, and

the light emitted by each said opto-electric element is capable of being turned on or off separately,

whereby a light source with continuously adjustable spatial distribution is achieved.

14. A vehicle headlamp as claimed in claim 13, wherein the light source consists of a plurality of opto-electronic elements.

15. A vehicle headlamp as claimed in claim 13, wherein the intensities of the light emitted by the opto-electronic elements are varied on said surface of the light source so that the spectral characteristic of said light beam is different at different points in a plane which is transverse to the light beam.

16. A vehicle headlamp as claimed in claim 15, wherein the light beam comprises at least two beam segments, each having a substantially different spectral characteristic from the other.

17. A vehicle headlamp as claimed in claim 16, wherein a first beam segment has a spectral characteristic which is rich in green-yellow light, and a second beam segment has a spectral characteristic which is rich in blue-green light.

18. A vehicle headlamp as claimed in claim 13, wherein the opto-electronic elements comprise light-emitting diodes.

19. A vehicle headlight system comprising:

one or more light sources, each of which comprises a plurality of opto-electronic elements, wherein

the opto-electronic elements form an array on a surface of the light source, and

the opto-electronic-elements are each adjustable to emit light of varying intensity,

whereby light beams generated by the light sources have a continuously adjustable spatial distribution.

20. The vehicle headlight system of claim 19, further comprising a first light source having a first array of opto-electronic elements and a second light source having a second array of opto-electronic elements, said second array being different from said first array.

21. The vehicle headlight system of claim 20, wherein the second array is mirror-inverted with respect to the first array.

22. A headlamp of a vehicle comprising a light source which includes a plurality of opto-electronic elements, wherein:

each said opto-electronic element is adjustable to emit light of variable luminous flux,

whereby a light beam generated by the light source has a continuously adjustable spatial distribution.

23. The headlamp of claim 22 wherein the luminous flux of the opto-electronic elements are varied by turning each element on or off.

24. The headlamp of claim 22 wherein the luminous flux of the opto-electronic elements are varied with respect to each other.

* * * * *

Exhibit PA-C

U.S. Patent No. 6,281,632

Stam et al.

US006281632B1

(12) **United States Patent**
Stam et al.

(10) **Patent No.: US 6,281,632 B1**
(45) **Date of Patent: Aug. 28, 2001**

(54) **CONTINUOUSLY VARIABLE HEADLAMP CONTROL**

(75) Inventors: **Joseph S. Stam**; **Jon H. Bechtel**; **Frederick T. Bauer**, all of Holland, MI (US)

(73) Assignee: **Gentex Corporation**, Zeeland, MI (US)

(*) Notice: Subject to any disclaimer, the term of this patent is extended or adjusted under 35 U.S.C. 154(b) by 0 days.

(21) Appl. No.: **09/546,858**

(22) Filed: **Apr. 10, 2000**

Related U.S. Application Data

(63) Continuation of application No. 09/157,063, filed on Sep. 18, 1998, now Pat. No. 6,049,171.

(51) **Int. Cl.**[7] **B60Q 1/02**

(52) **U.S. Cl.** ..... **315/82**; 250/208.1; 250/214 AL; 307/10.8; 340/469; 340/939

(58) **Field of Search** ..... 315/82, 77; 250/208.1, 250/214 AL; 307/10.8; 340/437, 438, 468, 469, 936, 939; 362/464, 465

(56) **References Cited**

U.S. PATENT DOCUMENTS

2,632,040	3/1953	Rabinow	175/321
2,827,594	3/1958	Rabinow	315/83

(List continued on next page.)

FOREIGN PATENT DOCUMENTS

2946561	5/1981	(DE) .
2641237	11/1989	(FR) .
2726144	4/1996	(FR) .
8166221	6/1996	(JP) .
8605417	9/1986	(WO) .
9735743	10/1997	(WO) .
9843850	10/1998	(WO) .
9947396	9/1999	(WO) .
0022881	4/2000	(WO) .

OTHER PUBLICATIONS

Kormanyos, Christopher M., "HID System With Adaptive Vertical Aim Control," SAE Paper 980003, 1998.
Kalze, Franz–Josef, "Xenon Light for Main and Dipped Beam," SAE Paper 980005, 1998.
Löwenau, J.P. et al., "Adaptive Light Control—A New Light Concept Controlled by Vehicle Dynamics and Navigation," SAE Paper 980007.
Shimizu, Tohru et al., "Development of PWM DRL With Low RF Emissions and Low Heat," SAE Paper 980322.

Primary Examiner—Don Wong
Assistant Examiner—Thuy Vinh Tran
(74) *Attorney, Agent, or Firm*—Price, Heneveld, Cooper, DeWitt & Litton; Brian J. Rees

(57) **ABSTRACT**

Continuously variable headlamps offer greater flexibility for roadway illumination but offer challenges in automatic control design. Each continuously variable headlamp has an effective illumination range varied by changing at least one parameter from a set including horizontal direction aimed, vertical direction aimed, and intensity emitted. A system for automatically controlling continuously variable headlamps on a controlled vehicle includes an imaging system capable of determining lateral and elevational locations of headlamps from oncoming vehicles and tail lamps from leading vehicles. The system also includes a control unit that can acquire an image from in front of the controlled vehicle. The image covers a glare area including points at which drivers of oncoming and leading vehicles would perceive the headlamps to cause excessive glare. The image is processed to determine if at least one oncoming or leading is within the glare area. If at least one vehicle is within the glare area, the headlamp illumination range is reduced. Otherwise, the headlamp illumination range is set to full illumination range.

29 Claims, 21 Drawing Sheets

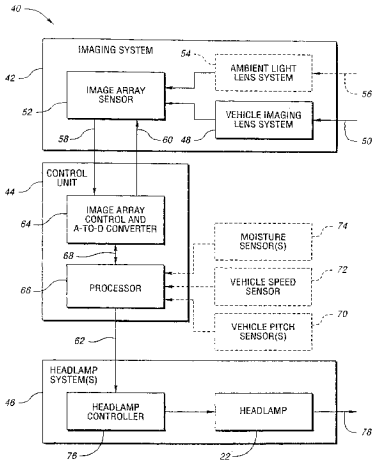

U.S. PATENT DOCUMENTS

4,692,798	9/1987	Seko et al.	358/93
4,862,037	8/1989	Farber et al.	315/83
4,891,559	1/1990	Matsumoto et al.	315/82
4,930,742	6/1990	Schofield et al.	248/475.1
4,967,319	10/1990	Seko	362/61
5,036,437	7/1991	Macks	362/61
5,124,549	6/1992	Michaels et al.	250/237 R
5,235,178	8/1993	Hegyi	250/226
5,329,206	7/1994	Slotkowski et al.	315/159
5,416,318	5/1995	Hegyi	250/226
5,426,294	6/1995	Kobayashi et al.	250/226
5,451,822	9/1995	Bechtel et al.	307/9.1
5,471,515	11/1995	Fossum et al.	377/60
5,508,592	4/1996	Lapatovich et al.	315/248
5,537,003	7/1996	Bechtel et al.	315/82
5,550,677	8/1996	Schofield et al.	359/604
5,554,912 *	9/1996	Thayer et al.	307/10.8
5,592,146 *	1/1997	Kover et al.	307/10.8
5,614,788	3/1997	Mullins et al.	315/82
5,660,454	8/1997	Mori et al.	362/61
5,666,028	9/1997	Bechtel et al.	315/82
5,715,093	2/1998	Schierbeck et al.	359/601
5,796,094	8/1998	Schofield et al.	250/208.1
5,837,994	11/1998	Stam et al.	250/208.1
5,841,126	11/1998	Fossum et al.	250/208.1
5,923,027	7/1999	Stam et al.	250/208.1
5,942,853	8/1999	Piscart	315/82
5,990,469	11/1999	Bechtel et al.	250/208.1
6,008,486	12/1999	Stam et al.	250/208.1
6,097,023	8/2000	Schofield et al.	250/208.1

* cited by examiner

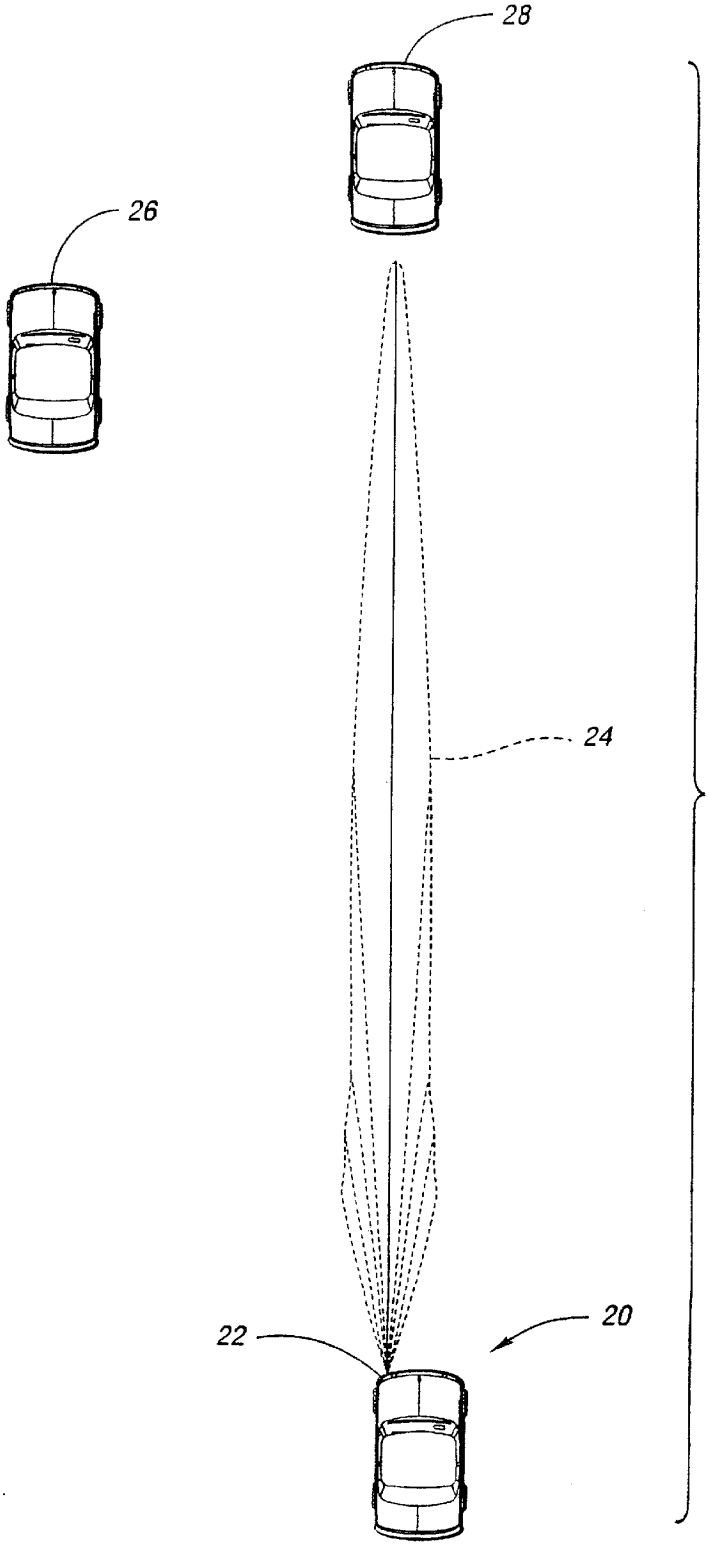

Fig. 1

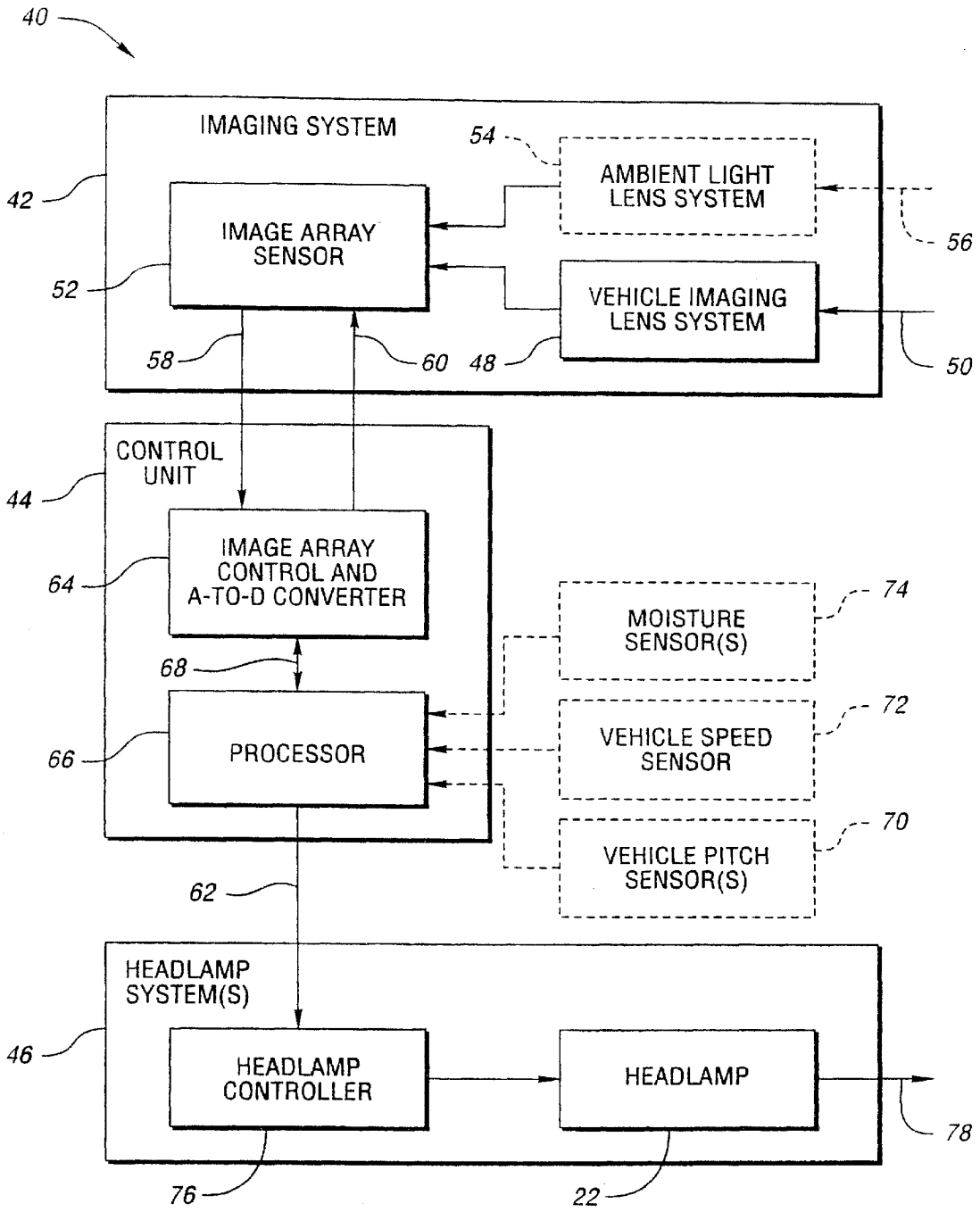
40
IMAGING SYSTEM
42
54
AMBIENT LIGHT LENS SYSTEM
56
IMAGE ARRAY SENSOR
52
VEHICLE IMAGING LENS SYSTEM
58
60
48
50
CONTROL UNIT
44
IMAGE ARRAY CONTROL AND A-TO-D CONVERTER
64
74
MOISTURE SENSOR(S)
68
72
VEHICLE SPEED SENSOR
66
PROCESSOR
70
VEHICLE PITCH SENSOR(S)
62
HEADLAMP SYSTEM(S)
46
HEADLAMP CONTROLLER
HEADLAMP
78
76
22

Fig. 2

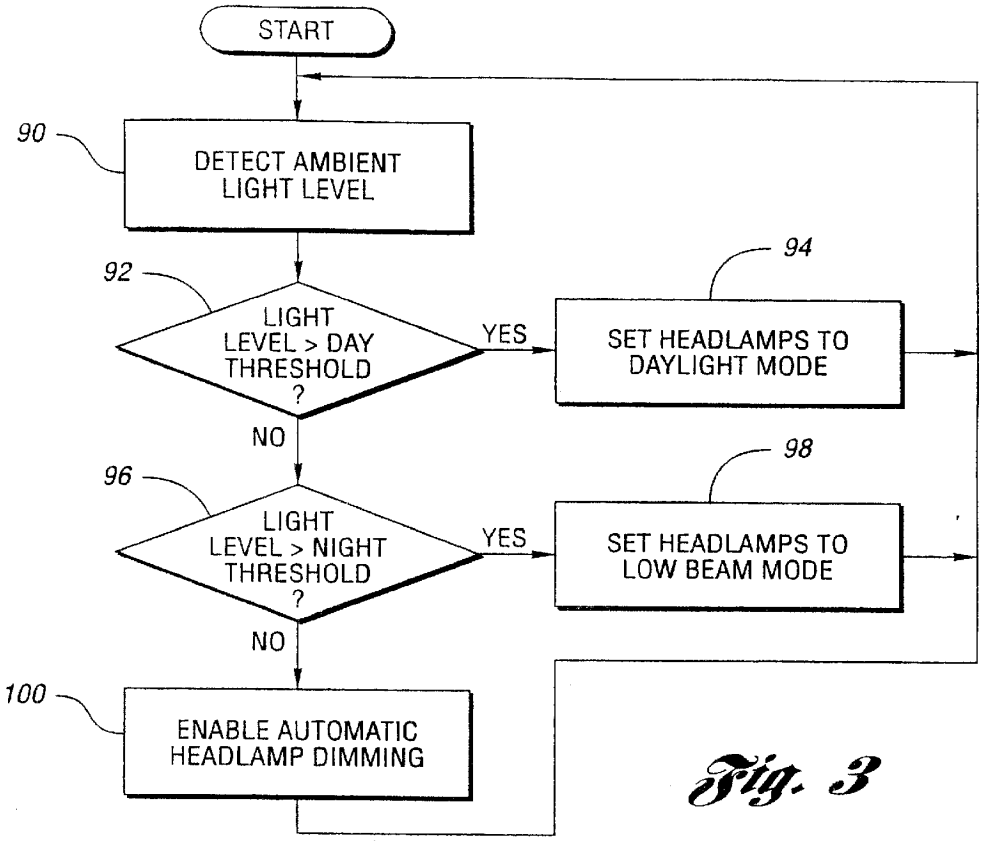
START
90
DETECT AMBIENT LIGHT LEVEL
92
LIGHT LEVEL > DAY THRESHOLD ?
YES
94
SET HEADLAMPS TO DAYLIGHT MODE
NO
96
LIGHT LEVEL > NIGHT THRESHOLD ?
YES
98
SET HEADLAMPS TO LOW BEAM MODE
NO
100
ENABLE AUTOMATIC HEADLAMP DIMMING

Fig. 3

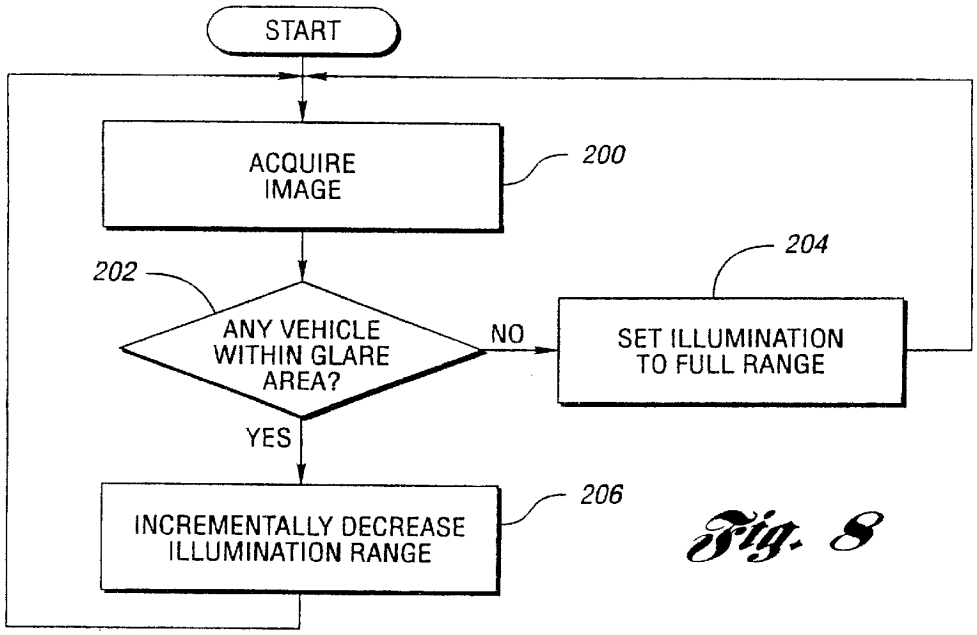
START
ACQUIRE IMAGE
200
202
ANY VEHICLE WITHIN GLARE AREA?
NO
204
SET ILLUMINATION TO FULL RANGE
YES
INCREMENTALLY DECREASE ILLUMINATION RANGE
206

Fig. 8

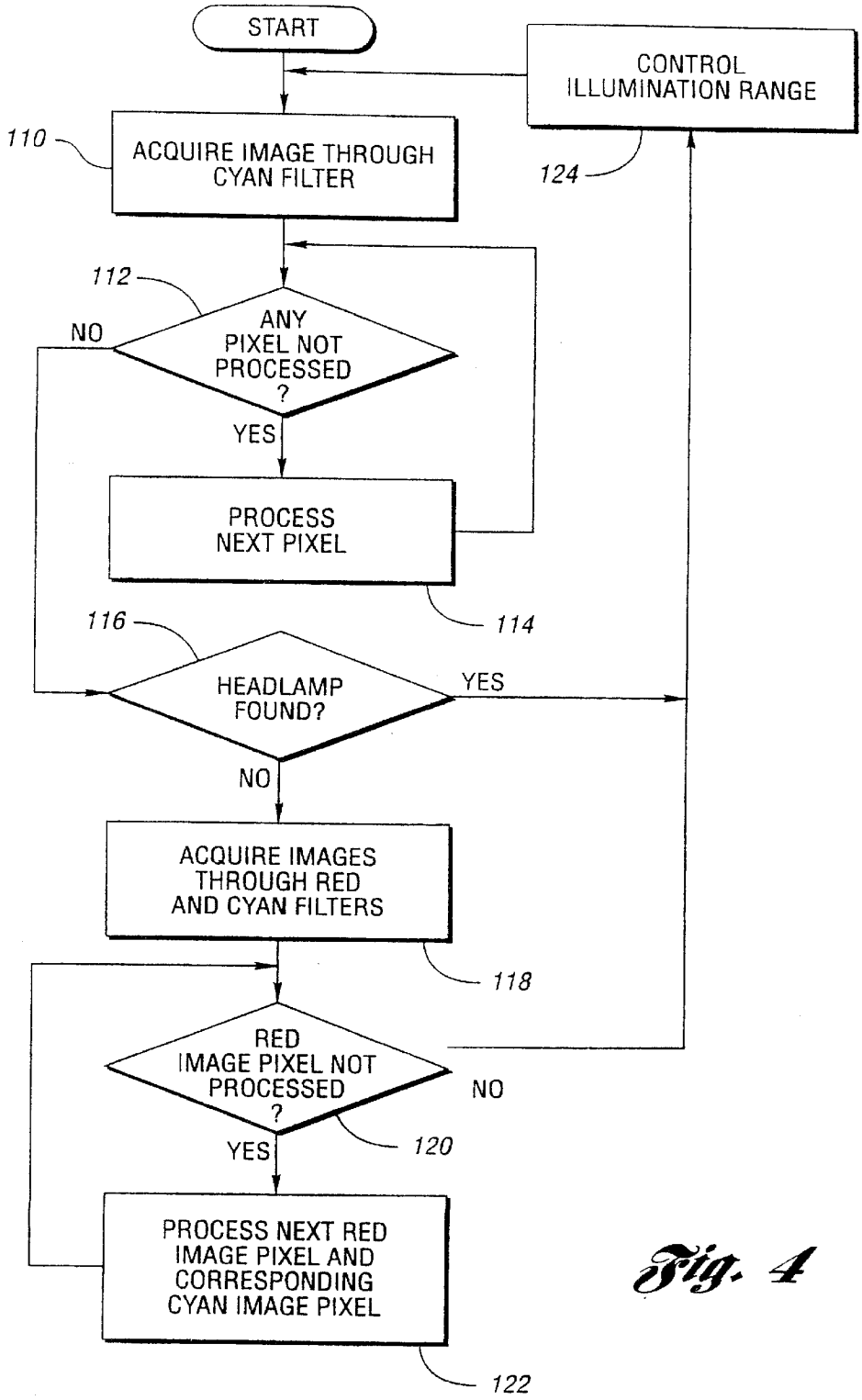
START
CONTROL ILLUMINATION RANGE
110
ACQUIRE IMAGE THROUGH CYAN FILTER
124
112
ANY PIXEL NOT PROCESSED ?
NO
YES
PROCESS NEXT PIXEL
114
116
HEADLAMP FOUND?
YES
NO
ACQUIRE IMAGES THROUGH RED AND CYAN FILTERS
118
RED IMAGE PIXEL NOT PROCESSED ?
NO
YES
120
PROCESS NEXT RED IMAGE PIXEL AND CORRESPONDING CYAN IMAGE PIXEL
122

Fig. 4

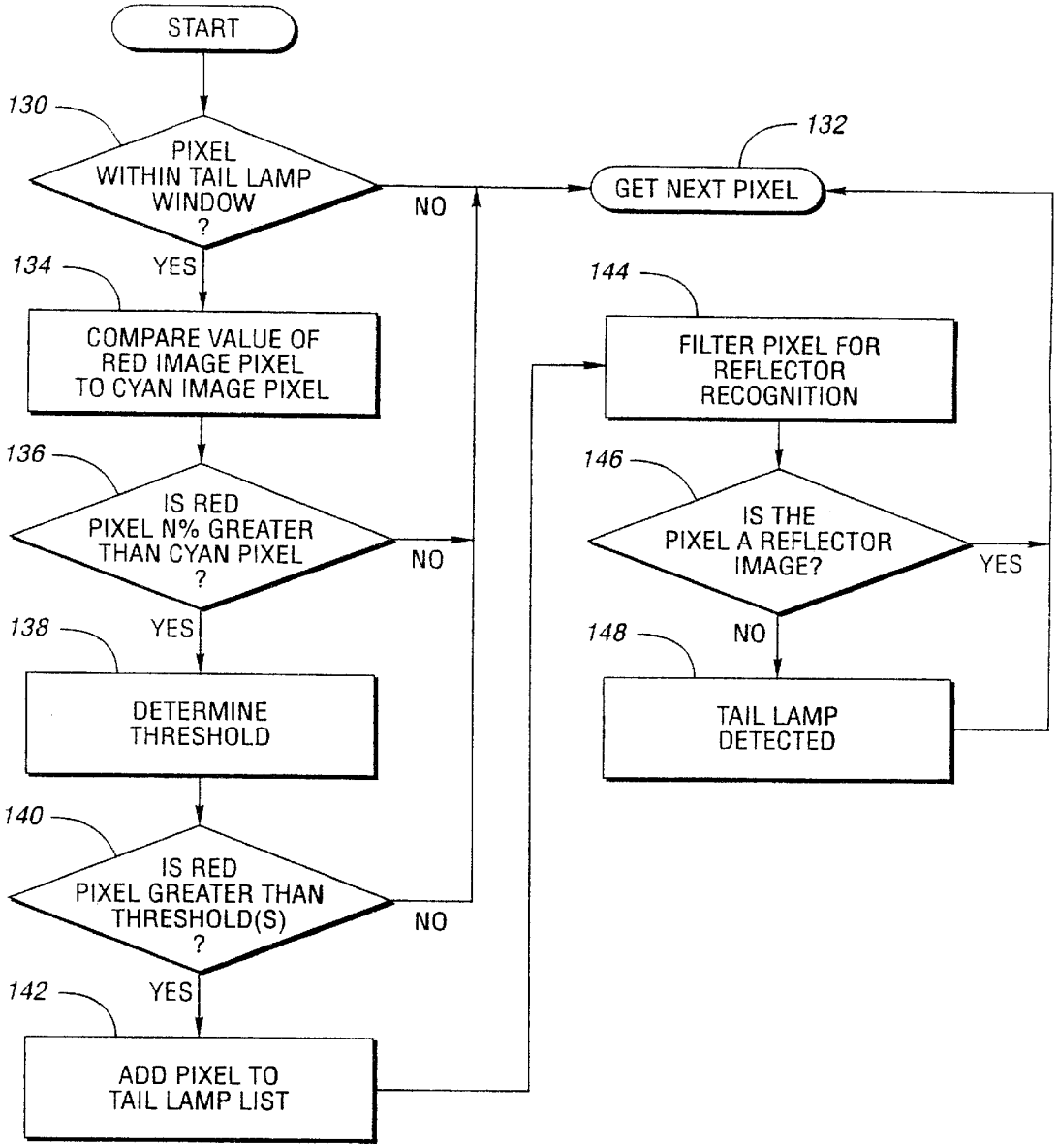
START
130
PIXEL WITHIN TAIL LAMP WINDOW ?
NO
YES
132
GET NEXT PIXEL
134
COMPARE VALUE OF RED IMAGE PIXEL TO CYAN IMAGE PIXEL
136
IS RED PIXEL N% GREATER THAN CYAN PIXEL ?
NO
YES
138
DETERMINE THRESHOLD
140
IS RED PIXEL GREATER THAN THRESHOLD(S) ?
NO
YES
142
ADD PIXEL TO TAIL LAMP LIST
144
FILTER PIXEL FOR REFLECTOR RECOGNITION
146
IS THE PIXEL A REFLECTOR IMAGE?
YES
NO
148
TAIL LAMP DETECTED

Fig. 5

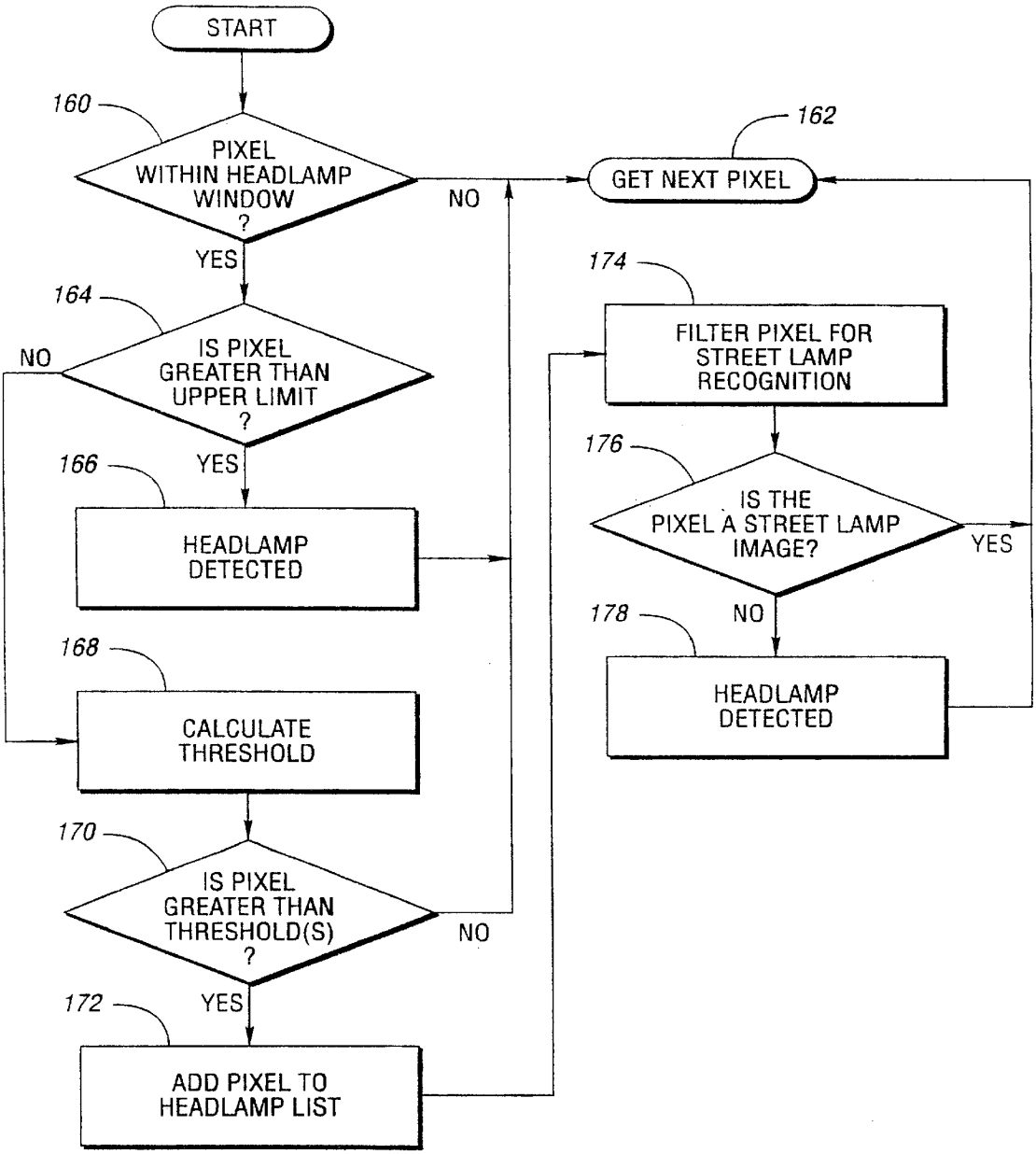
START
160
PIXEL WITHIN HEADLAMP WINDOW ?
NO
YES
162
GET NEXT PIXEL
164
IS PIXEL GREATER THAN UPPER LIMIT ?
NO
YES
166
HEADLAMP DETECTED
168
CALCULATE THRESHOLD
170
IS PIXEL GREATER THAN THRESHOLD(S) ?
NO
YES
172
ADD PIXEL TO HEADLAMP LIST
174
FILTER PIXEL FOR STREET LAMP RECOGNITION
176
IS THE PIXEL A STREET LAMP IMAGE?
YES
NO
178
HEADLAMP DETECTED

Fig. 6

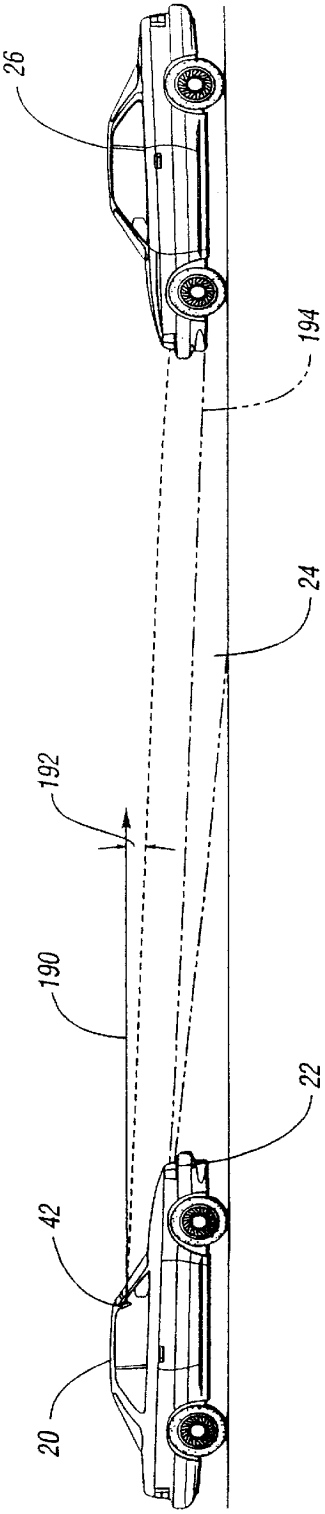

Fig. 7

Fig. 9

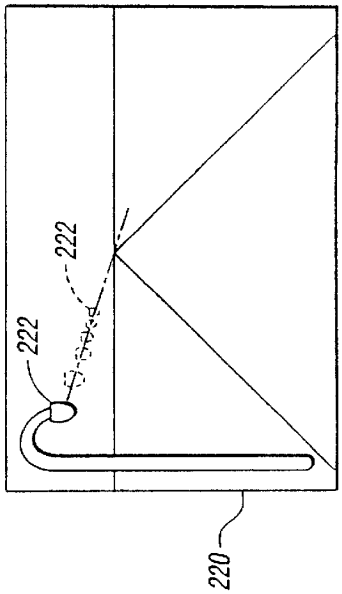

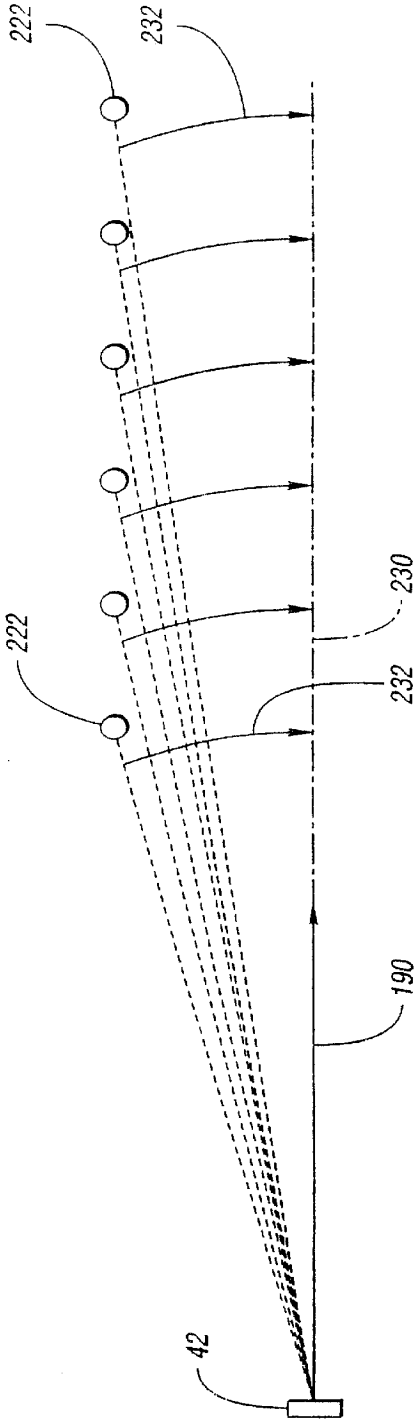

Fig. 10a

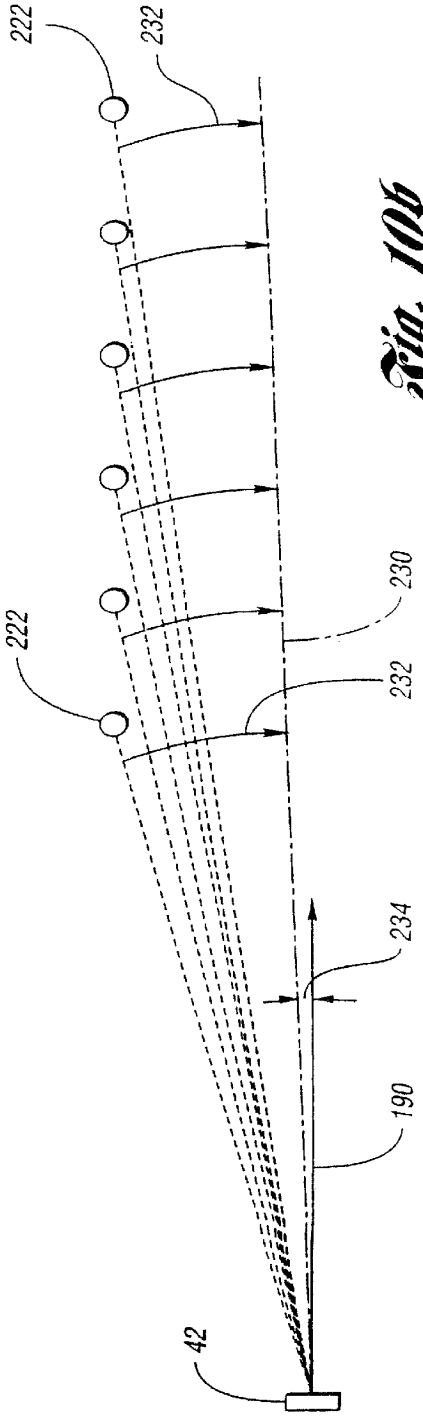

Fig. 10b

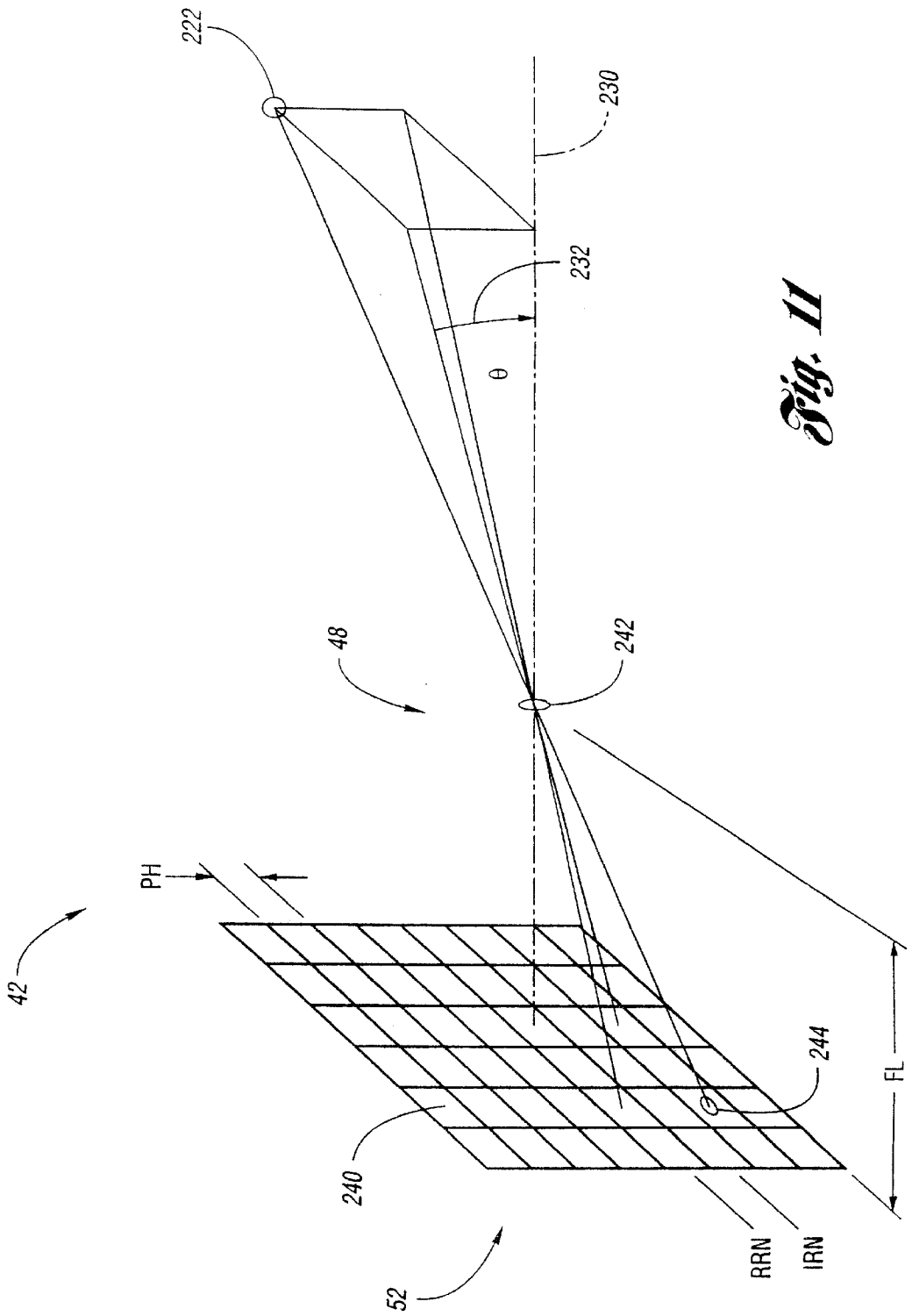

Fig. 11

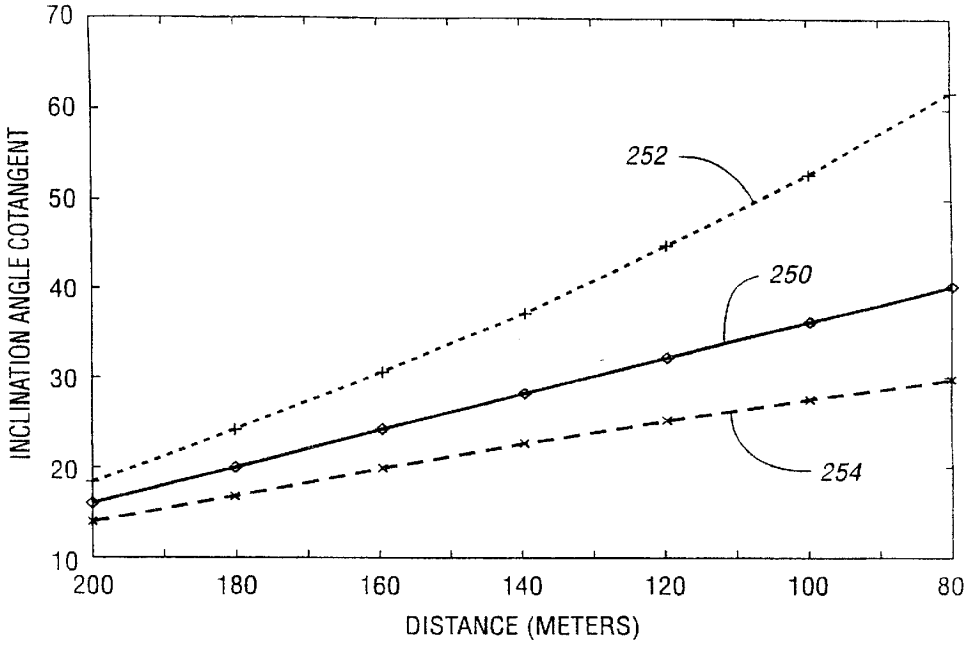
70
60
50
40
30
20
10
INCLINATION ANGLE COTANGENT
200
180
160
140
120
100
80
DISTANCE (METERS)
252
250
254

Fig. 12

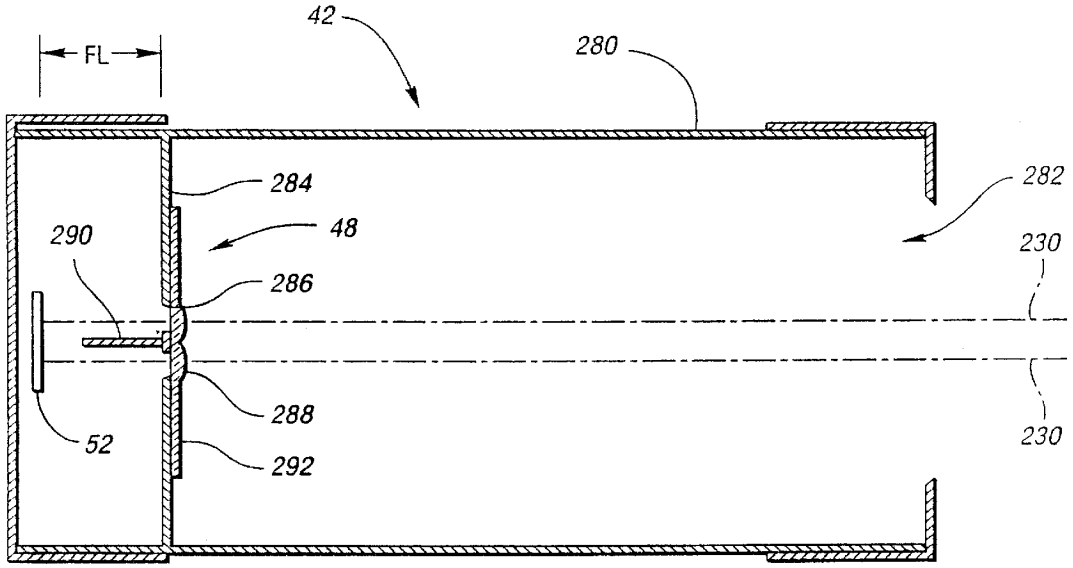
FL
42
280
284
282
48
290
230
286
288
52
292
230

Fig. 14

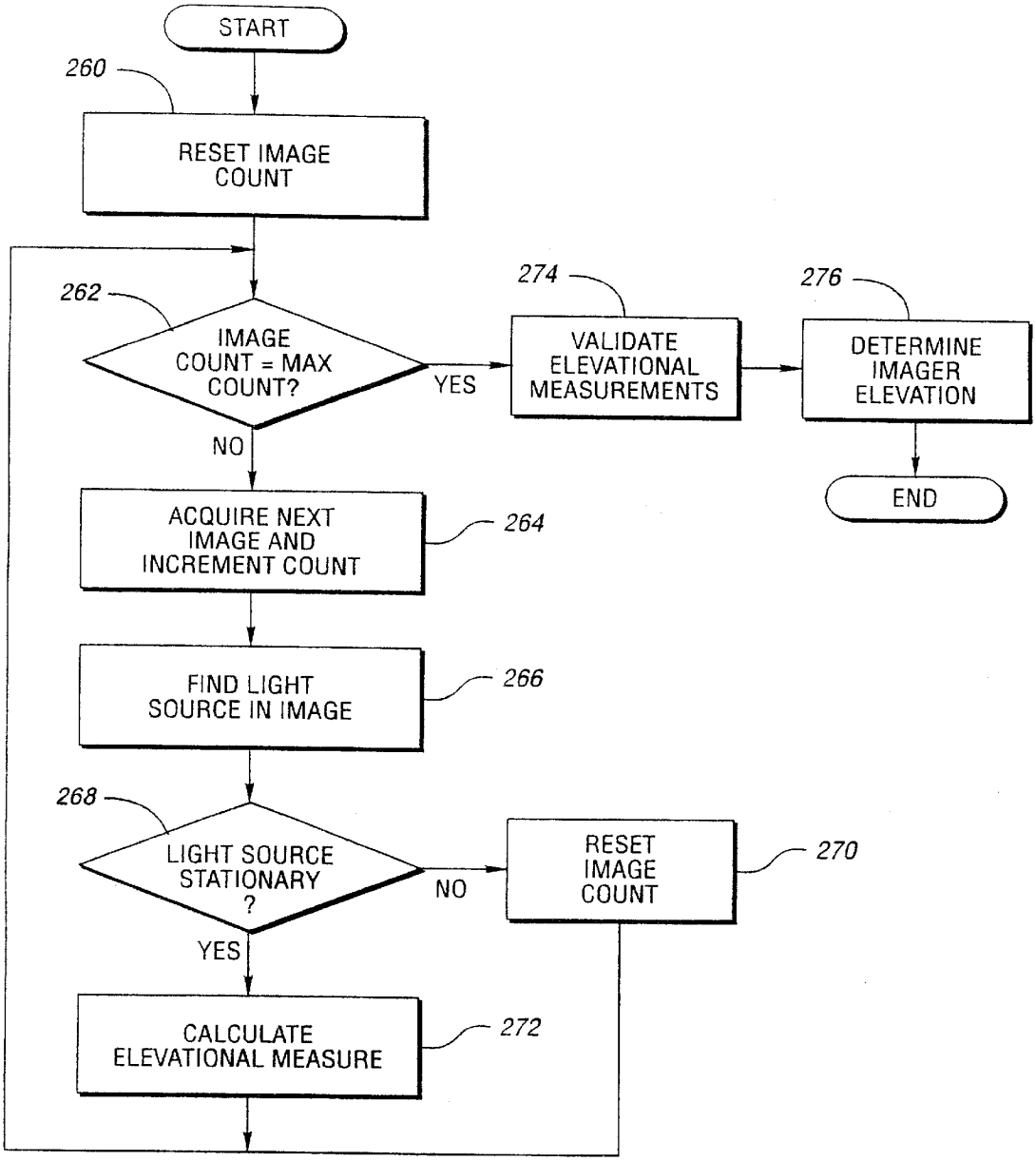
START
260
RESET IMAGE COUNT
262
IMAGE COUNT = MAX COUNT?
YES
NO
274
VALIDATE ELEVATIONAL MEASUREMENTS
276
DETERMINE IMAGER ELEVATION
END
ACQUIRE NEXT IMAGE AND INCREMENT COUNT
264
FIND LIGHT SOURCE IN IMAGE
266
268
LIGHT SOURCE STATIONARY ?
NO
YES
RESET IMAGE COUNT
270
CALCULATE ELEVATIONAL MEASURE
272

Fig. 13

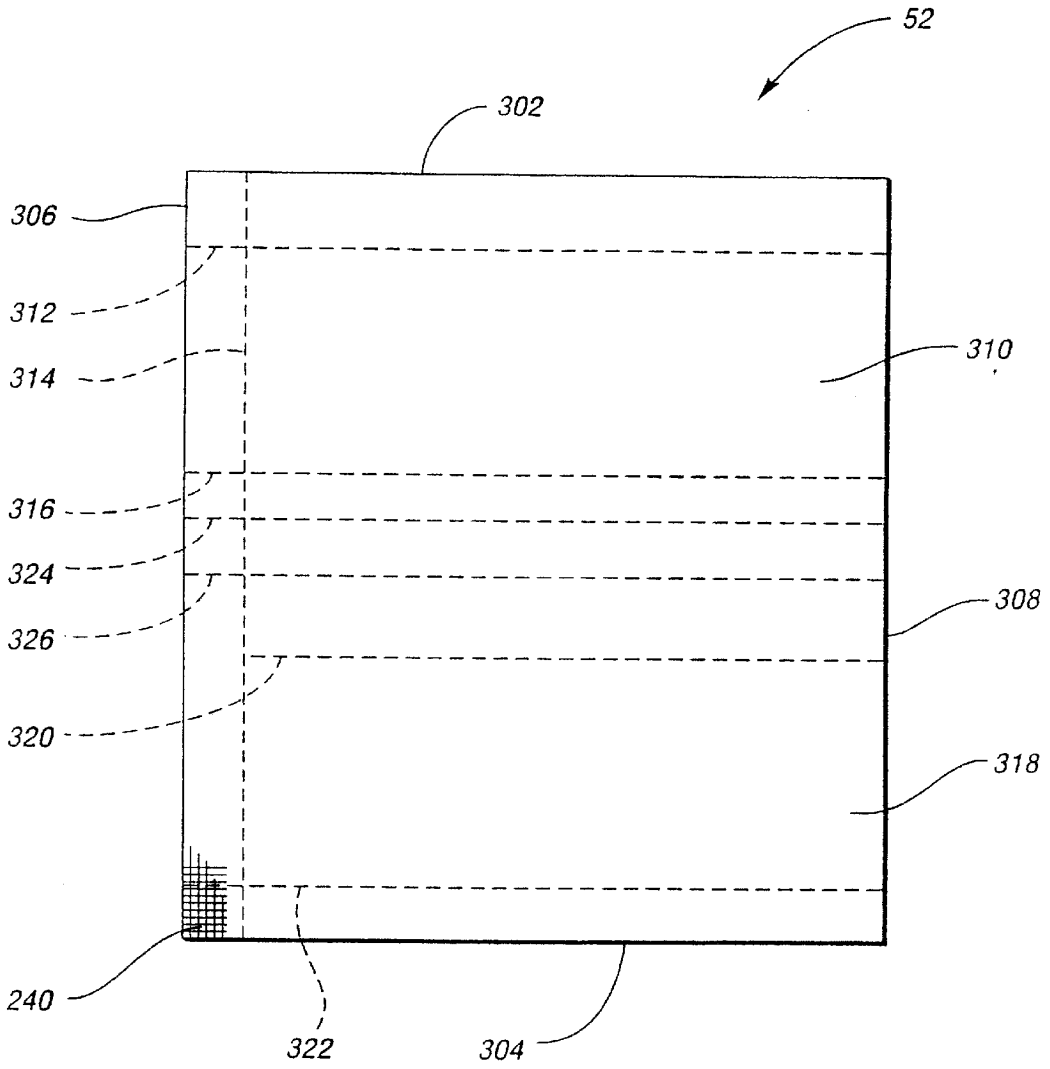

Fig. 15

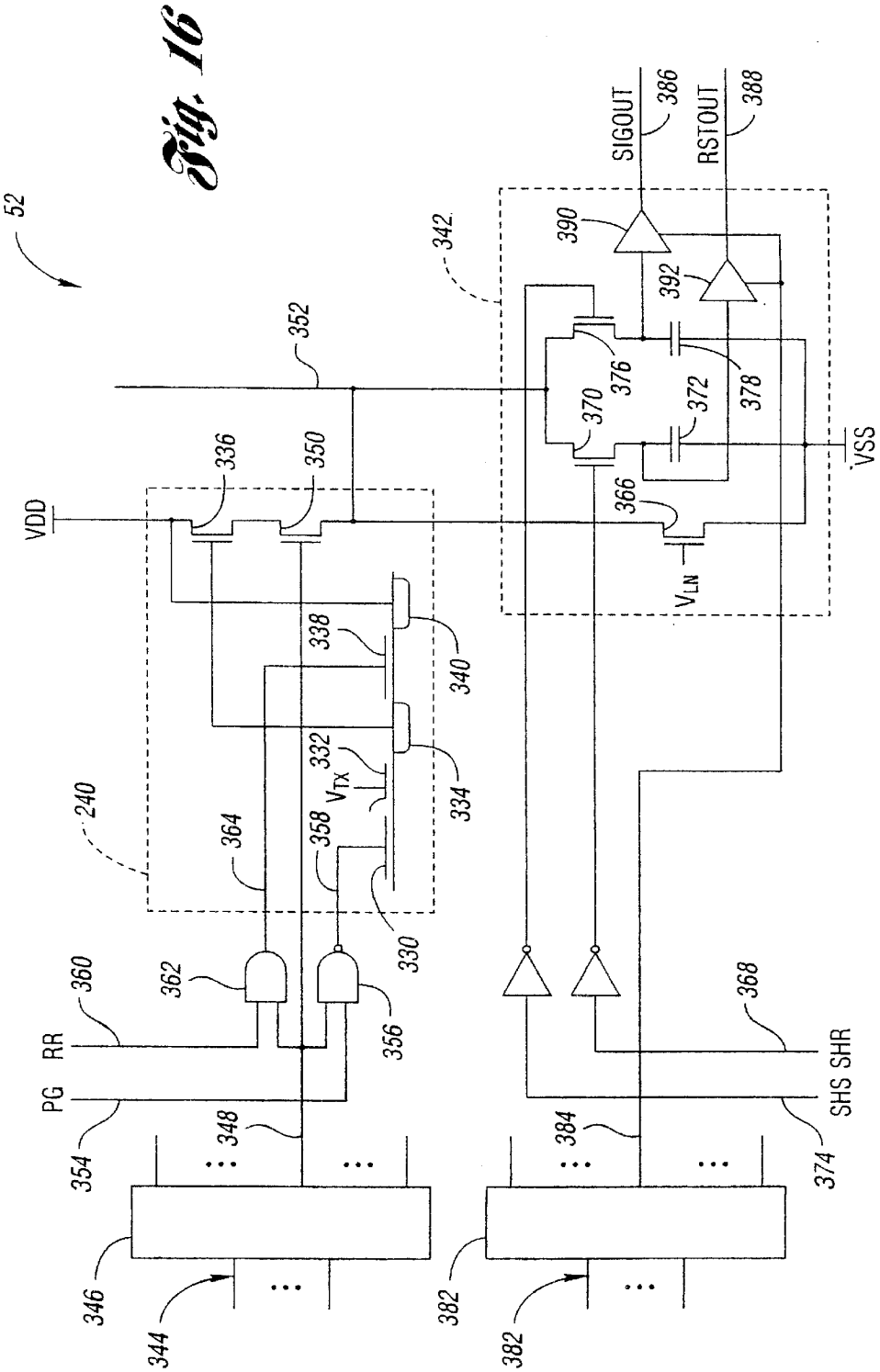
52
VDD
336
350
352
342
390
392
SIGOUT
386
RSTOUT
388
376
370
372
378
VSS
366
V_{LN}
338
340
332
V_{TX}
334
240
364
358
330
360
362
356
RR
PG
354
348
368
SHS SHR
374
384
346
344
382
382

Fig. 16

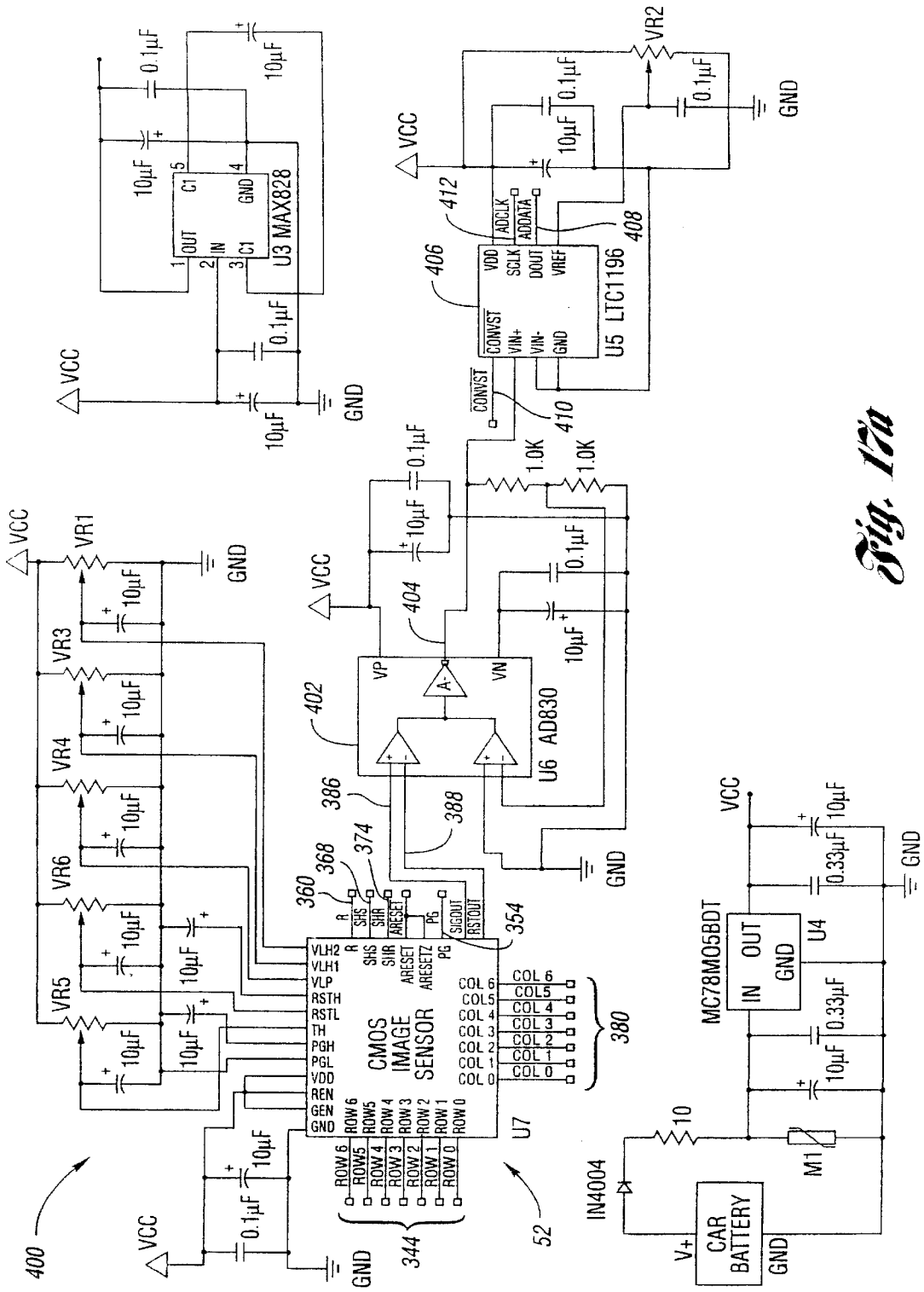
U3 MAX828
OUT
IN
C1
GND
U5 LTC1196
VDD
SCLK
DOUT
VREF
CONVST
VIN+
VIN-
ADCLK
ADDATA
U6 AD830
VP
VN
U7
CMOS IMAGE SENSOR
VLH2
VLH1
VLP
RSTH
RSTL
TH
PGH
PGL
VDD
REN
GEN
GND
R
SHS
SHR
ARESET
ARESETZ
PG
SIGOUT
RSTOUT
COL 6
COL5
COL 4
COL 3
COL 2
COL 1
COL 0
ROW 6
ROW5
ROW 4
ROW 3
ROW 2
ROW 1
ROW 0
MC78M05BDT
IN
OUT
GND
U4
IN4004
CAR BATTERY
V+
M1
VCC
GND
VR1
VR2
VR3
VR4
VR5
VR6
0.1µF
10µF
0.33µF
1.0K
10
400
52
344
360
368
374
354
386
388
402
404
406
408
410
412

Fig. 12a

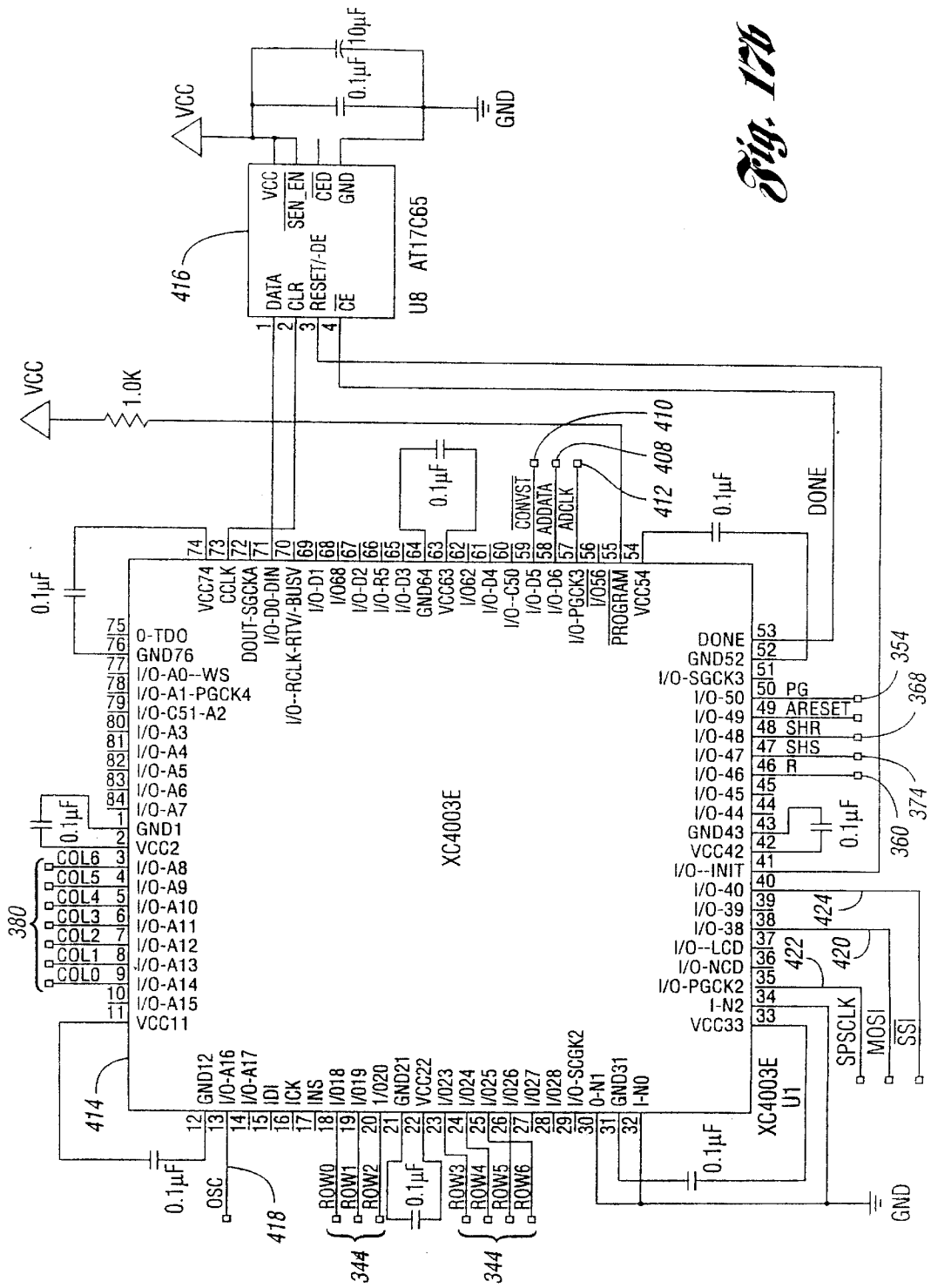
VCC
10µF
0.1µF
GND
VCC
SEN_EN
CED
GND
DATA
CLR
RESET/-DE
CE
U8 AT17C65
416
VCC
1.0K
410
408
412
0.1µF
CONVST
ADDATA
ADCLK
DONE
0.1µF
VCC74
CCLK
DOUT-SGCKA
I/O-D0-DIN
I/O--RCLK-RTV/-BUSV
I/O-D1
I/O68
I/O-D2
I/O-R5
I/O-D3
GND64
VCC63
I/O62
I/O-D4
I/O--C50
I/O-D5
I/O-D6
I/O-PGCK3
I/O56
PROGRAM
VCC54
0-TDO
GND76
I/O-A0--WS
I/O-A1-PGCK4
I/O-C51-A2
I/O-A3
I/O-A4
I/O-A5
I/O-A6
I/O-A7
GND1
VCC2
I/O-A8
I/O-A9
I/O-A10
I/O-A11
I/O-A12
I/O-A13
I/O-A14
I/O-A15
VCC11
COL6
COL5
COL4
COL3
COL2
COL1
COL0
380
XC4003E
DONE
GND52
I/O-SGCK3
I/O-50
I/O-49
I/O-48
I/O-47
I/O-46
I/O-45
I/O-44
GND43
VCC42
I/O--INIT
I/O-40
I/O-39
I/O-38
I/O--LCD
I/O-NCD
I/O-PGCK2
I-N2
VCC33
PG
ARESET
SHR
SHS
R
354
368
374
360
0.1µF
424
422
420
SPSCLK
MOSI
SSI
XC4003E
U1
GND12
I/O-A16
I/O-A17
IDI
ICK
INS
I/O18
I/O19
I/O20
GND21
VCC22
I/O23
I/O24
I/O25
I/O26
I/O27
I/O28
I/O-SCGK2
0-N1
GND31
I-N0
414
0.1µF
OSC
418
ROW0
ROW1
ROW2
ROW3
ROW4
ROW5
ROW6
344
344
GND

Fig. 12b

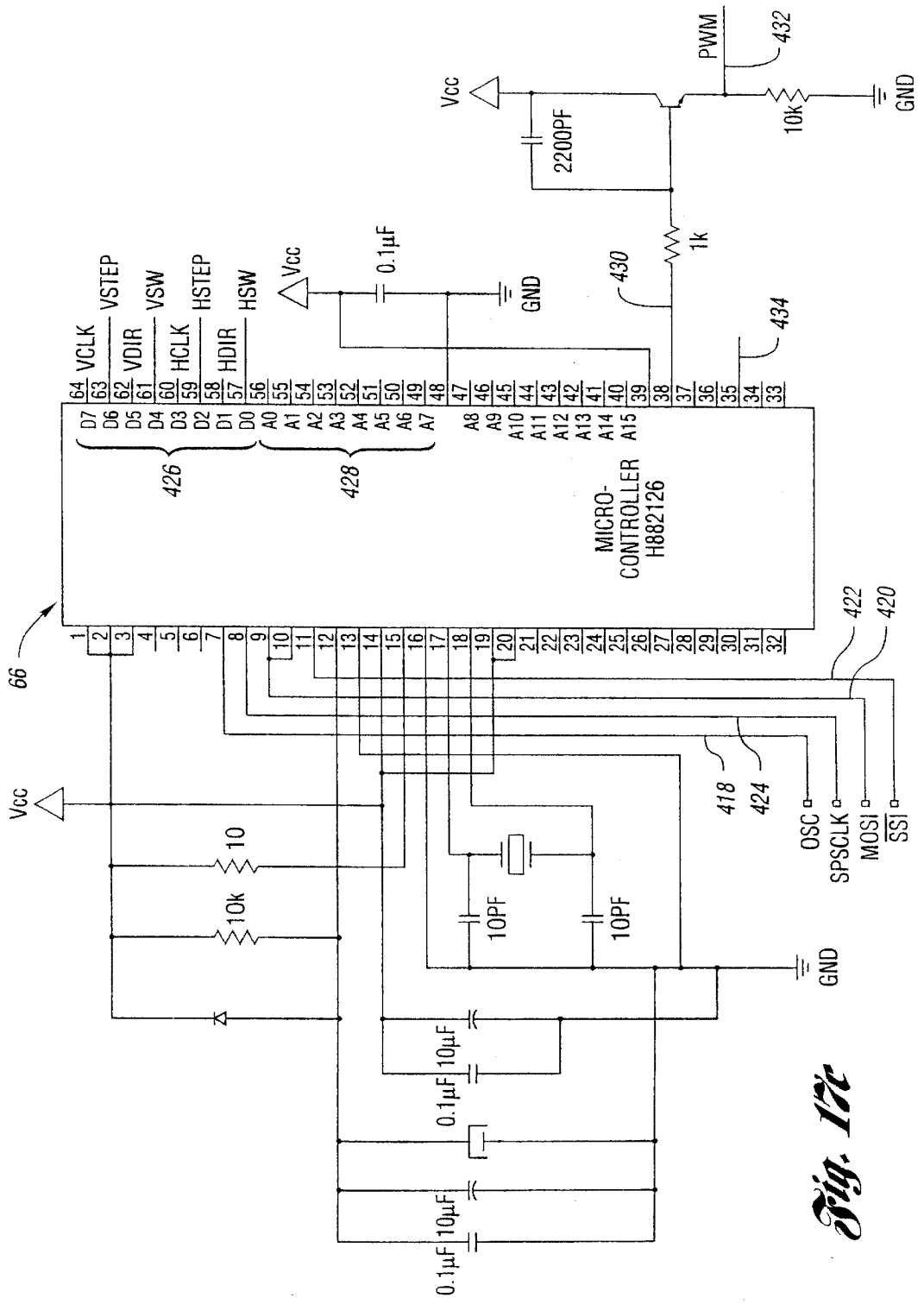
Vcc
2200PF
PWM
432
10k
GND
1k
430
434
0.1µF
Vcc
GND
VCLK
VSTEP
VDIR
VSW
HCLK
HSTEP
HDIR
HSW
D7 D6 D5 D4 D3 D2 D1 D0
A0 A1 A2 A3 A4 A5 A6 A7
A8 A9 A10 A11 A12 A13 A14 A15
426
428
MICRO-
CONTROLLER
H882126
66
422
420
418
424
OSC
SPSCLK
MOSI
SSI
Vcc
10
10k
10PF
10PF
GND
0.1µF
10µF
0.1µF
10µF
0.1µF

Fig. 17c

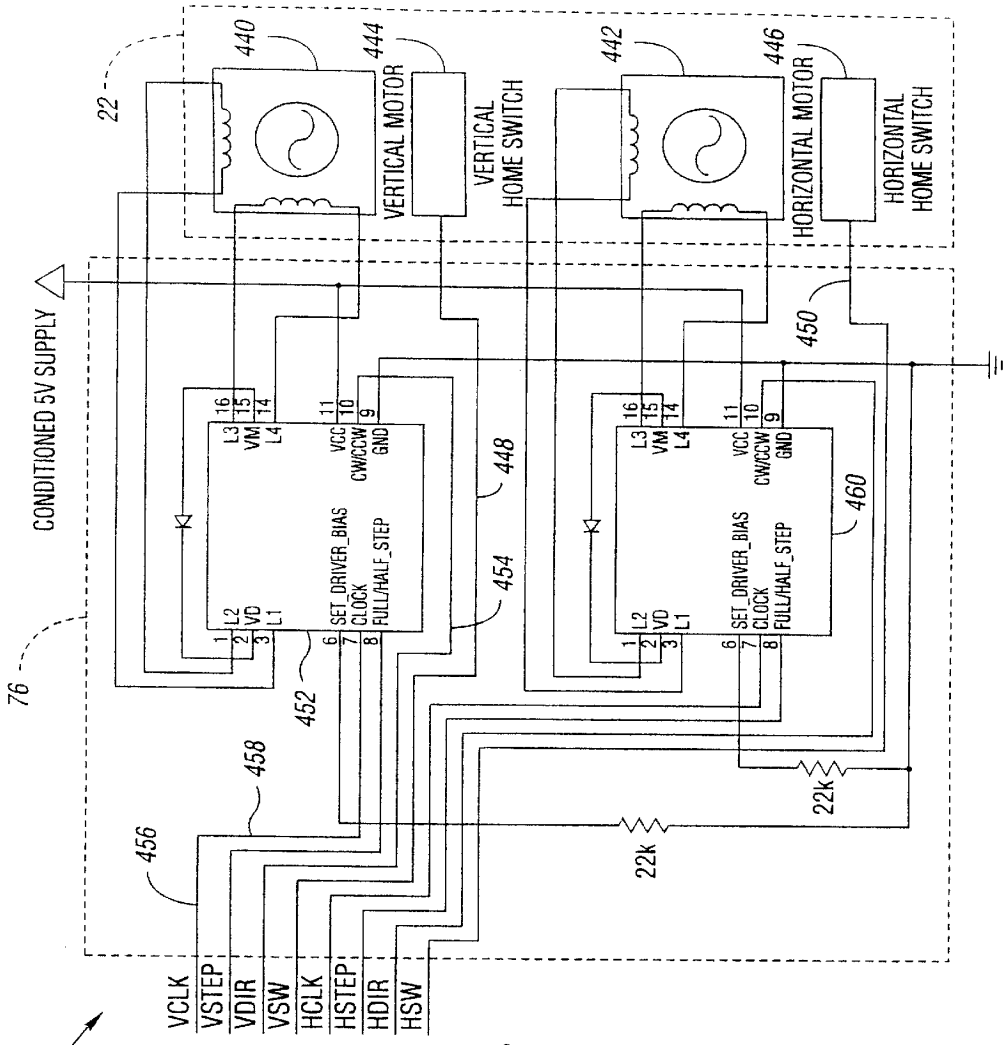

Fig. 17e

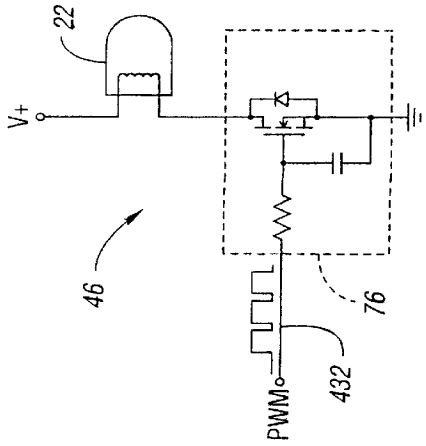

Fig. 17b

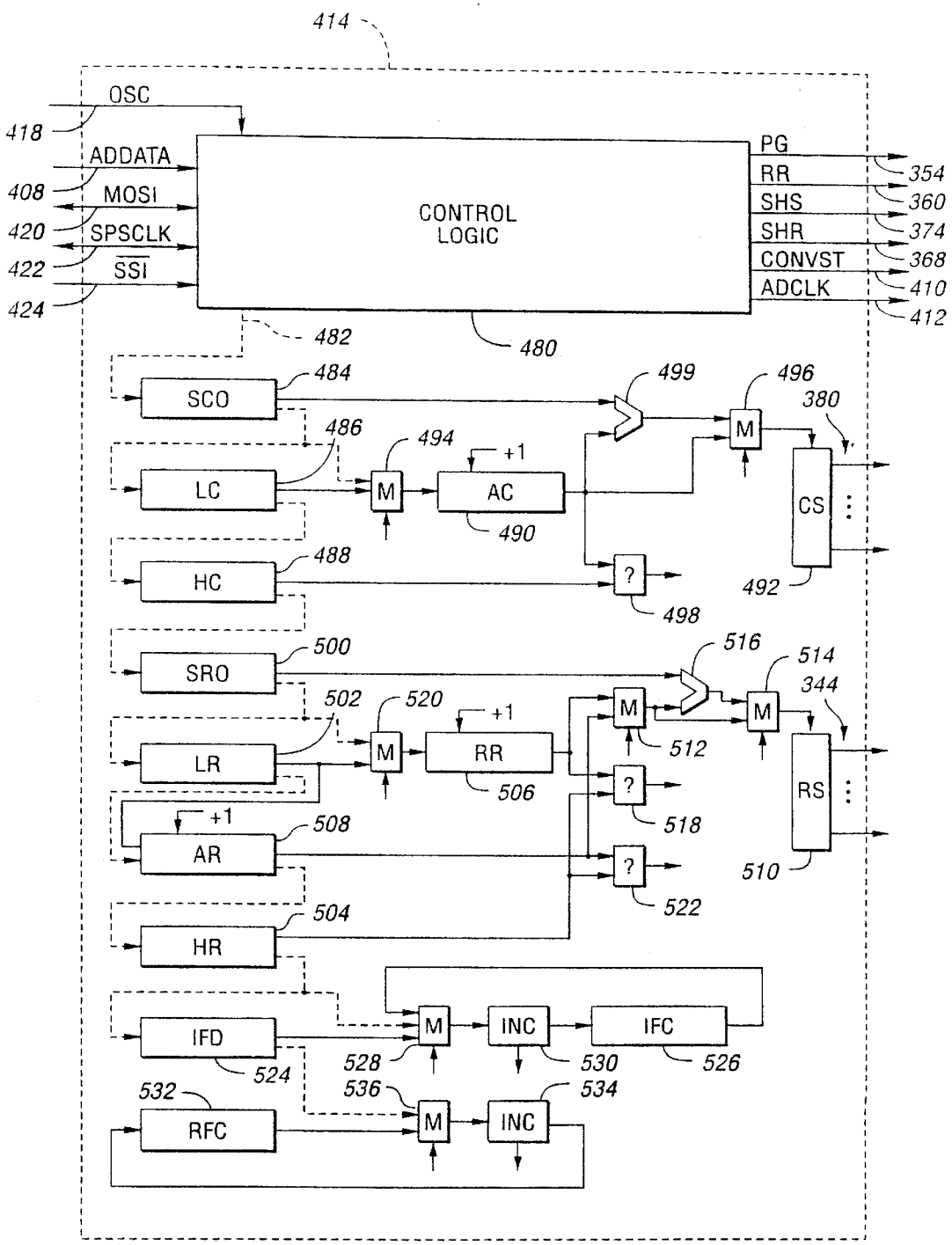
414
OSC
418
ADDATA
408
MOSI
420
SPSCLK
422
SSI
424
CONTROL LOGIC
PG
RR
SHS
SHR
CONVST
ADCLK
354
360
374
368
410
412
482
480
SCO
484
499
496
380
M
486
494
+1
LC
M
AC
490
CS
HC
488
?
492
498
SRO
500
516
514
344
502
520
+1
M
M
LR
M
RR
512
506
?
RS
+1
AR
508
518
?
510
522
HR
504
IFD
M
INC
IFC
524
528
530
526
532
536
534
RFC
M
INC

Fig. 18

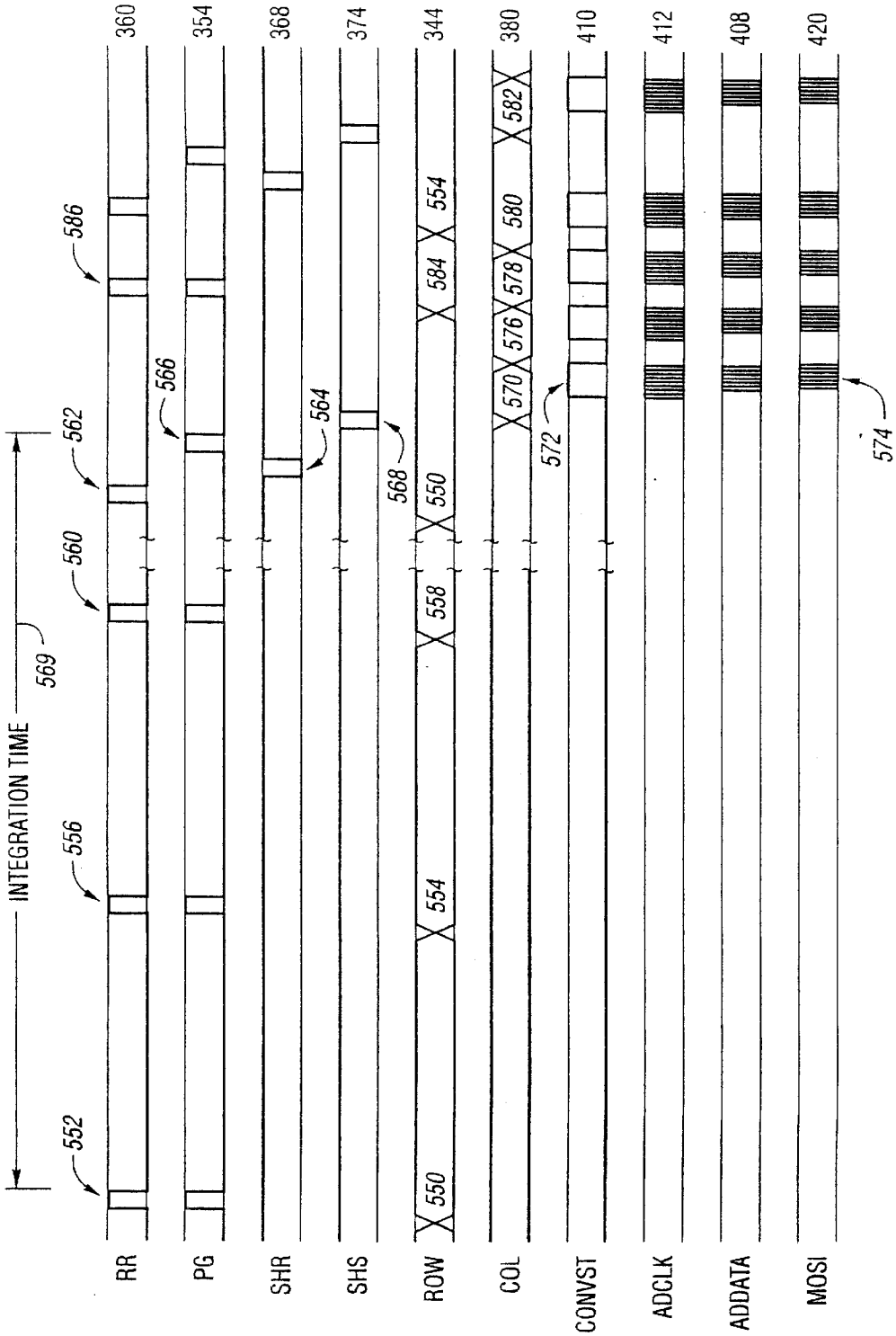
INTEGRATION TIME
569
RR
PG
SHR
SHS
ROW
COL
CONVST
ADCLK
ADDATA
MOSI
360
354
368
374
344
380
410
412
408
420
552
556
560
562
586
566
564
568
572
574
550
554
558
550
554
584
570
576
578
580
582

Fig. 19

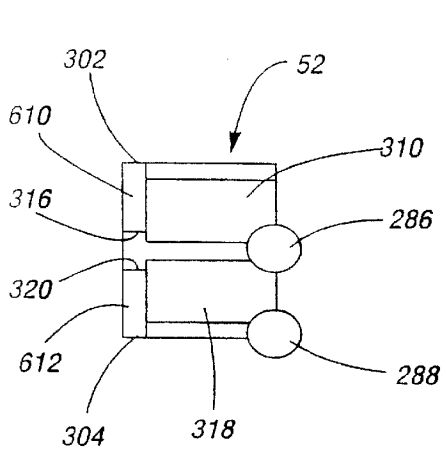
302
52
610
310
316
286
320
612
288
304
318

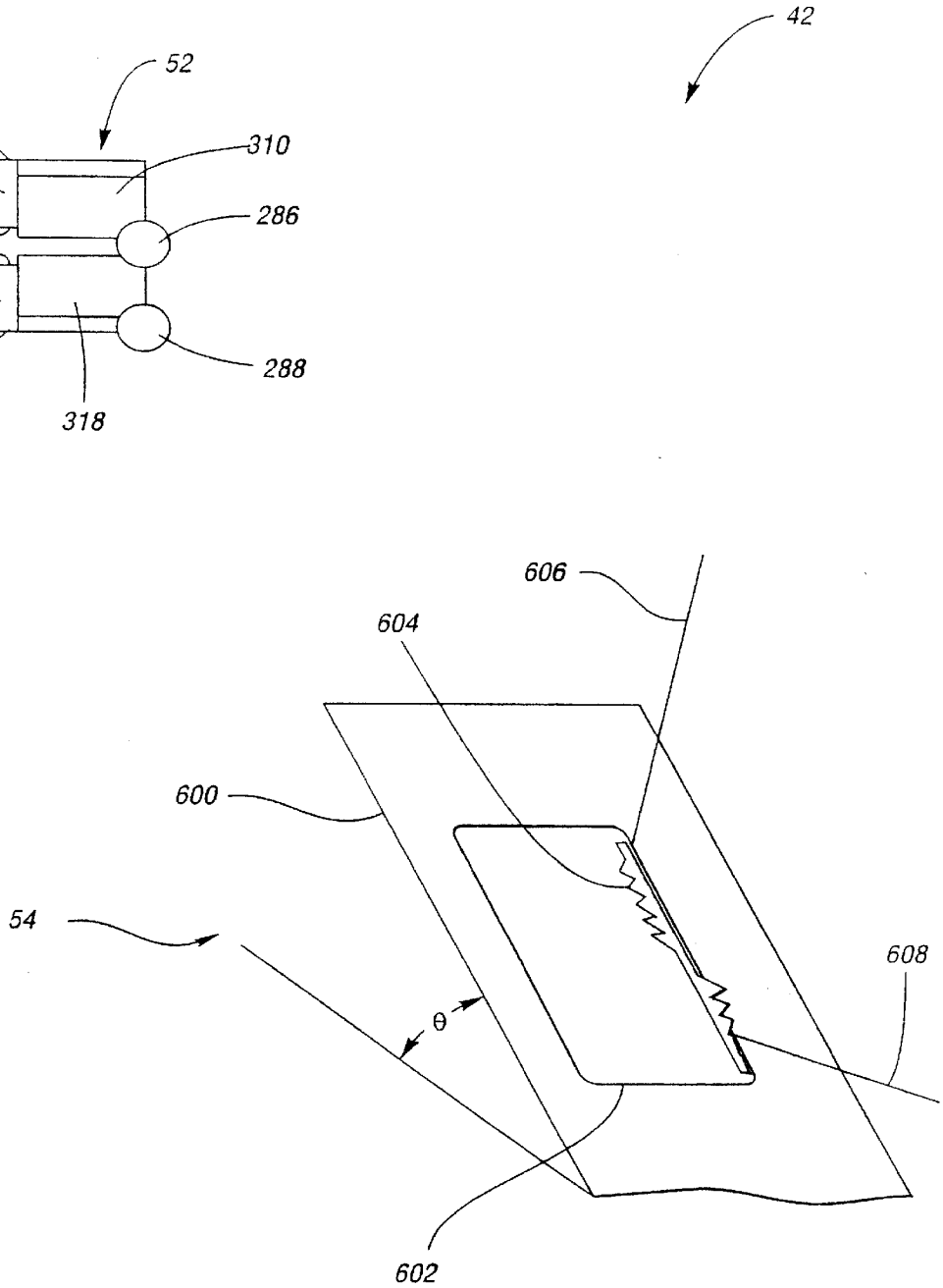
42
606
604
600
54
θ
608
602

Fig. 20

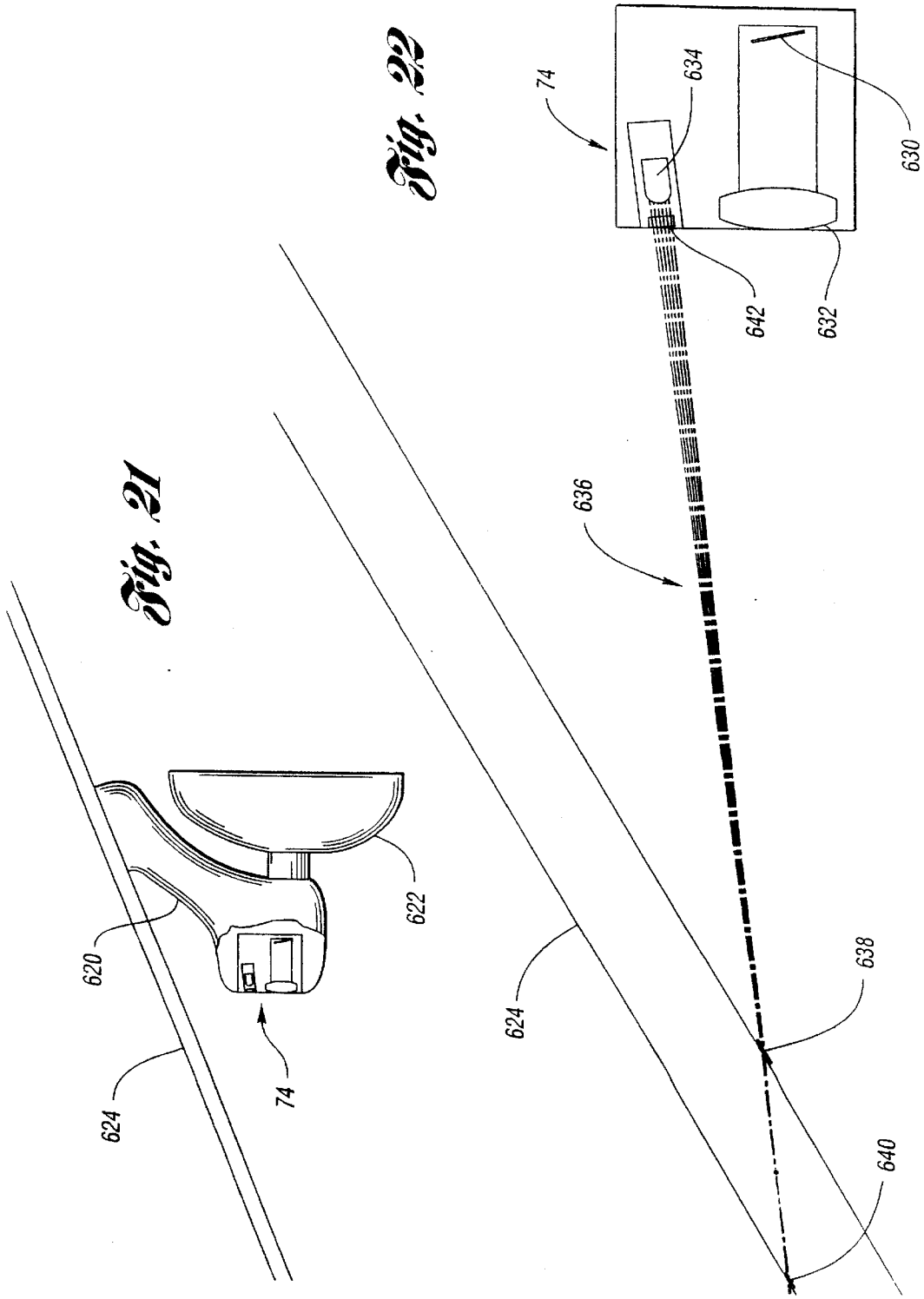
Fig. 21
Fig. 22
620
622
624
74
624
636
638
640
74
634
630
642
632

CONTINUOUSLY VARIABLE HEADLAMP CONTROL

CROSS-REFERENCE TO RELATED APPLICATION

This application is a continuation of U.S. patent application Ser. No. 09/157,063, entitled "CONTINUOUSLY VARIABLE HEADLAMP CONTROL," filed on Sep. 18, 1998, on behalf of Joseph S. Stam et al., now U.S. Pat. No. 6,049,171, the entire disclosure of which is incorporated herein by reference.

TECHNICAL FIELD

The present invention relates to automatically controlling continuously variable headlamps to prevent excessive glare seen by drivers in front of the headlamps.

BACKGROUND ART

Recently, headlamps producing a continuously variable illumination range have become available. The illumination range may be varied by one or both of changing the intensity of light and changing the direction of light emitted by the headlamps.

Varying headlamp illumination intensity can be accomplished in several different means. A first means is to provide a pulse width modulated (PWM) signal to the headlamp. By varying the duty cycle of headlamp power, the headlamp illumination intensity can be increased or decreased. This may be accomplished by providing a PWM signal from a control system to a high power field effect transistor (FET) in series with the headlamp bulb.

Another means of varying the power duty cycle of a headlamp is to provide a PWM signal to a lamp driver integrated circuit such as a Motorola MC33286. This integrated circuit provides the added advantage of limiting the maximum inrush current to the headlamp, thus potentially extending the life of the headlamp bulb.

Yet another means of varying headlamp illumination uses high intensity discharge (HID) headlamps. HID lamps are a new, highly efficient headlamp technology. The ballasts used to power HID headlamps can be directly supplied with a control signal to vary headlamp illumination intensity.

Still another means to vary the illumination intensity of a headlamp is to provide an attenuating filter to absorb some of the light emitted from the headlamp. An electrochromic filter may be placed in front of the headlamp. By controlling the voltage applied to the electrochromic filter, the amount of light absorbed and, hence, the emitted illumination level, can be varied.

There are also several means available for changing the direction of light emitted from headlamps. Headlamp aim can be varied using actuators to move the headlamp housing relative to the vehicle. Typically, these actuators are electric motors such as stepper motors.

For headlamps with appropriately designed reflectors, mechanically moving the light source relative to the reflector can change headlamp beam direction as well as headlamp illumination intensity.

HID headlamps provide several additional methods of aiming the headlamp beam. Some of these methods involve deflecting or perturbing the arc in such away as to vary the lamp output. U.S. Pat. No. 5,508,592 entitled "Method For Deflecting The Arc Of An Electrodeless HID Lamp" to W. Lapatovich, S. Butler, J. Bochinski, and H. Goss, which is

hereby incorporated by reference, describes exciting the HID lamp with a high-frequency radio signal. Modulating the signal causes the lamp to operate at an acoustic resonance point, perturbing the arc from its quiescent position. An alternative technique, known as magnetodynamic positioning (MDP), uses a magnetic field to shape the HID arc. MDP is being developed by Osram Sylvania Inc. of Danvers, Massachusetts.

A collection of methods for implementing continuously variable headlamps is described in Society of Automotive Engineers (SAE) publication SP-1323 entitled "Automotive Lighting Technology", which is hereby incorporated by reference.

Automatic control of continuously variable headlamps offers several potential benefits over automatic control of traditional on-off headlamps. Greater flexibility for illumination is available, allowing headlamp illumination to be better adapted to driving conditions. Also, continuously varying the headlamp illumination does not create rapid changes in illumination that may startle the driver. Various methods have been devised to control both continuously variable and conventional discreet headlamps. One of the oldest methods is to aim the headlamp in the same direction as steered wheels. Another method increases the illumination range in proportion to increasing vehicle speed.

Still another method of controlling headlamps has been developed for HID lamps. The increased brightness and blueish color of the HID lamps is particularly disrupting to oncoming drivers. Due to this disruptness effect, certain European countries require headlamp leveling systems if HID lamps are used on a vehicle. These headlamp leveling systems detect the pitch of the vehicle relative to the road and adjust the vertical aim of the headlamps accordingly. Advanced systems further use the speed of the vehicle to anticipate small pitch disturbances caused by acceleration.

One problem with current continuously variable headlamp control systems is the inability to consider oncoming or leading vehicles in determining the illumination range of headlamps. One prior art device is expressed in U.S. Pat. No. 4,967,319 entitled "Headlight Apparatus For Automotive Vehicle" by Y. Seko. This device utilizes vehicle speed along with the output from a five-element linear optical sensor array directly coupled to a headlamp. The headlamp incorporates motor drives to adjust the elevational angle of illumination beams. This design requires separate sensing and control system for each headlamp or suggests as an alternative a controlled headlamp only on the side of the vehicle facing opposing traffic. This design presents many problems. First, the optical sensor and associated electronics are in close proximity to the hot headlamp. Second, placing the image sensor on the lower front portion of the vehicle may result in imaging surfaces being coated with dirt and debris. Third, placing the image sensor close to the headlamp beam makes the system subject to the masking effects of scattered light from fog, snow, rain, or dust particles in the air. Fourth, this system has no color discriminating capability and, with only five pixels of resolution, the imaging system is incapable of accurately determining lateral and elevational locations of headlamps or tail lights at any distance.

What is needed is control of continuously variable headlamps based on detection of oncoming headlamps and leading tail lights at distances where headlamp illumination would create excessive glare for the drivers of oncoming and leading vehicles.

SUMMARY OF THE INVENTION

It is an object of the present invention to control continuously variable headlamps based on detected headlamps from

oncoming vehicles and tail lights from leading vehicles. The control system should determine the proper aim of headlamps in steerable headlamp systems and should determine the proper intensity of headlamps in variable intensity headlamp systems. Gradual changes in the region of headlamp illumination should be supported. The control system should also operate correctly over a wide range of ambient lighting conditions.

It is another object of the present invention to provide a headlamp control system which determines the proper aim of headlamps in steerable headlamp systems.

It is still another object of the present invention to provide a headlamp control system which varies the intensity of headlamp beams continuously in response to detected oncoming and leading vehicles.

It is yet another object of the present invention to provide a headlamp control system wherein the transition from high beam to low beam or from low beam to high beam is gradual and thus not startling to the vehicle driver.

It is a further object of the present invention to provide control of continuously variable headlamps over a wide range of ambient lighting conditions

In carrying out the above objects and features of the present invention, a method for controlling continuously variable headlamps is provided. The method includes detecting an ambient light level. The continuously variable headlamps are set to daylightmode if the ambient light level is greater than a first threshold. The headlamps are set to low beam mode if the ambient light level is less than the first threshold but greater than a second threshold. Automatic headlamp dimming is enabled if the ambient light level is less than the second threshold.

In an embodiment of the present invention, automatic headlamp dimming includes obtaining an image in front of the headlamps. The image covers a glare area including points at which a driver in a vehicle in front of the headlamps would perceive the continuously variable headlamps as causing excessive glare if the headlamps were at full range. The image is processed to determine if the vehicle is within the glare area. If the vehicle is within the glare area, the continuously variable headlamp illumination range is reduced. Otherwise, the continuously variable headlamps are set to full illumination range. In various refinements, the continuously variable illumination range may be modified by changing the intensity of light emitted, by changing the direction of light emitted, or both.

In another embodiment of the present invention, reducing the continuously variable headlamp illumination range includes incrementally decreasing the illumination range. Obtaining the image, processing the image, and incrementally decreasing illumination range are repeated until the illumination range produces a level of illumination at the oncoming or leading vehicle position that would not be perceived as causing excessive glare by the driver in the vehicle in front of the continuously variable headlamps.

In still another embodiment of the present invention, the ambient light level is determined by a multipixel image sensor having an elevational angle relative to the controlled vehicle having continuously variable headlamps. The method includes acquiring a sequence of images, finding a stationary light source in each image, calculating a measure of elevation for the stationary light source in each image, and determining the elevational angle based on the calculated measures of elevation.

In a further embodiment of the present invention, the full illumination range is reduced if at least one form of precipitation such as fog, rain, snow, and the like is detected.

In a still further embodiment of the present invention, each continuously variable headlamp has an effective illumination range varied by changing vertical direction aimed. Each effective illumination range has an elevational direction corresponding to an upper extent of the headlamp beam bright portion. The method further includes acquiring a sequence of images. The elevational direction is determined for at least one continuously variable headlamp in each image of the sequence. A determination is then made as to whether or not the sequence of images was taken during travel over a relatively straight, uniform surface. If so, the determined elevational directions are averaged to obtain an estimate of actual elevational direction.

A system for controlling at least one continuously variable headlamp on a controlled vehicle is also provided. Each continuously variable headlamp has an effective illumination range varied by changing at least one parameter from a set including horizontal direction aimed, vertical direction aimed, and intensity emitted. The system includes an imaging system capable of determining lateral and elevational locations of headlamps from oncoming vehicles and tail lamps from leading vehicles. The system also includes a control unit that can acquire an image from in front of the at least one headlamp. The image covers a glare area including points at which the driver of a vehicle in front of the headlamps would perceive the headlamps as causing excessive glare. The image is processed to determine if at least one vehicle including oncoming vehicles and leading vehicles is within the glare area. If at least one vehicle is within the glare area, the headlamp illumination range is reduced. Otherwise, the headlamp illumination range is set to full illumination range.

In an embodiment of the present invention, the controlled vehicle has at least one low beam headlamp with variable intensity and at least one high beam headlamp with variable intensity. The control unit reduces the illumination range by decreasing the intensity of the high beam headlamp while increasing the intensity of the low beam headlamp.

In another embodiment of the present invention wherein headlamps produce illumination through heating at least one filament the control unit causes a low amount of current to flow through each filament when the controlled vehicle engine is running and when the headlamp containing the filament is not controlled to emit light. The low amount of current heating the filament decreases filament brittleness thereby prolonging filament life.

In still another embodiment of the present invention, the imaging system is incorporated into the rearview mirror mount. The imaging system is aimed through a portion of the controlled vehicle windshield cleaned by a windshield wiper.

In yet another embodiment of the present invention, the controlled vehicle has a headlamp with a variable vertical aim direction. The system further includes at least one sensor for determining vehicle pitch relative to the road surface. The control unit aims the headlamp to compensate for controlled vehicle pitch variations. In a refinement, the controlled vehicle includes a speed sensor.

The control unit anticipates controlled vehicle pitch changes based on changes in controlled vehicle speed.

In a further embodiment of the present invention, the controlled vehicle includes headlamps with variable horizontal aim direction. The control unit determines if a leading vehicle is in a curb lane on the opposite side of the controlled vehicle from oncoming traffic and is in the glare area. If no leading vehicle is in one of the curb lanes, headlamp

illumination range is reduced by aiming the headlamps away from the direction of oncoming traffic.

In a still further embodiment of the present invention, the control unit reduces headlamp illumination range at a predetermined rate over a predetermined transition time.

A system is also provided for controlling at least one continuously variable headlamp having an effective illumination range varied by changing vertical direction aimed. Each effective illumination range has an elevational direction corresponding to an upper extent of the headlamp beam bright portion. The system includes an imaging system capable of determining lateral and elevational locations of headlamps from oncoming vehicles. The imaging system is mounted a vertical distance above each headlamp. The system also includes a control unit for acquiring an image in front of the headlamps. The image covers a glare area including points at which the driver of the oncoming vehicle would perceive the continuously variable headlamps to cause excessive glare. The image is processed to determine if at least one oncoming vehicle is within the glare area. If at least oncoming vehicle is within the glare area, the elevational angle between the imaging system and the headlamps of each of the at least one oncoming vehicles is determined. If at least one oncoming vehicle is within the glare area, the continuously variable headlamps are aimed such that the elevational direction is substantially parallel with a line between the imaging system and the headlamps of the oncoming vehicle producing the greatest of the determined elevational angles.

A system is further provided for controlling continuously variable headlamps. The system includes at least one moisture sensor for detecting at least one form of precipitation such as fog, rain, and snow. The system also includes a control unit to reduce the headlamp full illumination range when precipitation is detected.

The above objects and other objects, features, and advantages of the present invention are readily apparent from the following detailed description of the best modes for carrying out the invention when taken in connection with the accompanying drawings.

BRIEF DESCRIPTION OF THE DRAWINGS

FIG. **1** is a diagram showing a continuously variable headlamp illumination range together with oncoming and leading vehicles;

FIG. **2** is a block diagram of a control system according to an embodiment of the present invention;

FIG. **3** is a flow diagram of a method for controlling continuously variable headlamps in different ambient lighting conditions according to the present invention;

FIG. **4** is a flow diagram of automatic headlamp dimming according to the present invention;

FIG. **5** is a flow chart of a method for detecting tail lamps according to an embodiment of the present invention;

FIG. **6** is a flow chart of a method for detecting headlamps according to an embodiment of the present invention;

FIG. **7** is a schematic diagram illustrating reduction of headlamp illumination range according to an embodiment of the present invention;

FIG. **8** is a flow diagram of an alternative method for reducing headlamp illumination range according to the present invention;

FIG. **9** is an illustration of street lamp imaging according to the present invention;

FIGS. **10***a* and **10***b* are schematic diagrams of apparent street light elevational angle as a function of camera-to-vehicle inclination angle;

FIG. **11** is a schematic diagram illustrating street lamp elevational angle calculation according to an embodiment of the present invention;

FIG. **12** is a graph illustrating street lamp elevational angles for three different camera-to-vehicle inclination angles;

FIG. **13** is a flow diagram of a method for calculating camera-to-vehicle inclination angle according to an embodiment of the present invention;

FIG. **14** is an imaging system that may be used to implement the present invention;

FIG. **15** is a schematic diagram of image array sensor subwindows that may be used to implement the present invention;

FIG. **16** is a schematic diagram of an embodiment of an image array sensor that may be used to implement the present invention;

FIGS. **17***a* through **17***e* are a schematic diagram of an embodiment of the present invention;

FIG. **18** is a block diagram illustrating registers and associated logic used to control the image control sensor according to an embodiment of the present invention;

FIG. **19** is a timing diagram illustrating image array sensor control signals for the logic in FIG. **18**;

FIG. **20** is an ambient light sensor that may be used to implement the present invention;

FIG. **21** is a diagram illustrating mounting of a moisture sensor that may be used to implement the present invention; and

FIG. **22** is a diagram illustrating operation of a moisture sensor that may be used to implement the present invention.

BEST MODES FOR CARRYING OUT THE INVENTION

Referring now to FIG. **1**, a continuously variable headlamp illumination range together with oncoming and leading vehicles are shown. Controlled vehicle **20** includes at least one continuously variable headlamp **22**. Each headlamp **22** produces a variable region of bright light known as illumination range **24**. A driver in oncoming vehicle **26** or leading vehicle **28** that is within illumination range **24** may view headlamps as producing excessive glare. This glare may make it difficult for the driver of oncoming vehicle **26** or leading vehicle **28** to see objects on the road, to read vehicle instruments, and to readjust to night viewing conditions once vehicle **26**, **28** is outside of illumination range **24**. Hence, illuminaton range **24** is perceived as a glare area by the driver of oncoming vehicle **26** or leading vehicle **28**.

The present invention attempts to reduce the level of glare seen by the driver of oncoming vehicle **26** or leading vehicle **28** by providing a control system that detects oncoming vehicle **26** or leading vehicle **28** and reduces illumination range **24** accordingly.

Referring now to FIG. **2**, a block diagram of a control system according to an embodiment of the present invention is shown. A control system for continuously variable headlamps, shown generally by **40**, includes imaging system **42**, control unit **44** and at least one continuously variable headlamp system **46**. Imaging system **42** includes vehicle imaging lens system **48** operative to focus light **50** from a region generally in front of controlled vehicle **20** onto image array sensor **52**. Imaging system **42** is capable of determining lateral and elevational locations of headlamps from oncoming vehicles **26** and leading vehicles **28**. In a preferred

embodiment of the present invention, vehicle imaging lens system **48** includes two lens systems, one lens system having a red filter and one lens system having a cyan filter. Lens system **48** permits image array sensor **52** to simultaneously view a red image and a cyan image of the same region in front of controlled vehicle **20**. Image array sensor **52** is preferably comprised of an array of pixel sensors. Further details regarding vehicle imaging lens system **48** and image array sensor **52** are described with regards to FIGS. **14** through **16** below.

In a preferred embodiment, imaging system **42** includes ambient light lens system **54** operable to gather light **56** over a wide range of elevational angles for viewing by a portion of image array sensor **52**. Ambient light lens system **54** is described with regards to FIG. **20** below. Alternatively, light **50** focused through vehicle imaging lens system **48** may be used to determine ambient light levels. Alternatively, a light sensor completely separate from imaging system **42** may be used to determine ambient light levels.

In a preferred embodiment, imaging system **42** is incorporated into the interior rearview mirror mount. Imaging system **42** is aimed through a portion of the windshield of controlled vehicle **20** cleaned by at least one windshield wiper.

Control unit **44** accepts pixel gray scale levels **58** and generates image sensor control signals **60** and headlamp illumination control signals **62**. Control unit **44** includes imaging array control and analog-to-digital converter (ADC) **64** and processor **66**. Processor **66** receives digitized image data from and sends control information to imaging array control and ADC **64** via serial link **68**. A preferred embodiment for control unit **44** is described with regards to FIGS. **17** through **19** below.

Control system **40** may include vehicle pitch sensors **70** to detect the pitch angle of controlled vehicle **20** relative to the road surface. Typically, two vehicle pitch sensors **70** are required. Each sensor is mounted on the chassis of controlled vehicle **20** near the front or rear axle. A sensor element is fixed to the axle. As the axle moves relative to the chassis, sensor **70** measures either rotational or linear displacement. To provide additional information, control unit **44** may also be connected to vehicle speed sensor **72**.

Control system **40** may include one or more moisture sensors **74**. Precipitation such as fog, rain, or snow may cause excessive light from headlamps **22** to be reflected back to the driver of controlled vehicle **20**. Precipitation may also decrease the range at which oncoming vehicles **26** and leading vehicles **28** may be detected. Input from moisture sensor **74** may therefore be used to decrease the full range of illumination range **24**. A moisture sensor that may be used to implement the present invention is described with regards to FIGS. **21** and **22** below.

Each continuously variable headlamp **22** is controlled by at least one headlamp controller **76**. Each headlamp controller **76** accepts headlamp illumination control signals **62** from control unit **44** and affects headlamp **22** accordingly to modify illumination range **24** of light **78** leaving headlamp **22**. Depending on the type of continuously variable headlamp **22** used, headlamp controller **76** may vary the intensity of light **78** leaving headlamp **22**, may vary the direction of light **78** leaving headlamp **22**, or both. Examples of circuits that may be used for headlamp controller **76** are described with regards to FIGS. **17***d* and **17***e* below.

In one embodiment of the present invention, control unit **44** can acquire an image covering a glare area including points at which a driver of oncoming vehicle **26** or leading vehicle **28** would perceive headlamps **22** to cause excessive glare. Control unit **44** process the image to determine if at least one vehicle **26**,**28** is within the glare area. If at least one vehicle is within the glare area, control unit **44** reduces illumination range **24**. Otherwise, headlamps **22** are set to full illumination range **24**.

In a preferred embodiment of the present invention, reductions to illumination range **24** and setting headlamps **22** to full illumination range **24** occurs gradually. Sharp transitions in illumination range **24** may startle the driver of controlled vehicle **20** since the driver may not be aware of the precise switching time. A transition time of between one and two seconds is desired for returning to full illumination range **24** from dimmed illumination range **24** corresponding to low beam headlamps. Such soft transitions in illumination range **24** also allow control system **40** to recover from a false detection of oncoming vehicle **26** or leading vehicle **28**. Since image acquisition time is approximately 30 ms, correction may occur without the driver of controlled vehicle **20** noticing any change.

For controlled vehicle **20** with both high beam and low beam headlamps **22**, reducing illumination range **24** may be accomplished by decreasing the intensity of high beam headlamps **22** while increasing the intensity of low beam headlamps **22**. Alternately, low beam headlamps can be left on continuously for ambient light levels fall below a certain threshold.

For controlled vehicle **20** with at least one headlamp **22** having a variable horizontal aimed direction, the aim of headlamp **22** may be moved away from the direction of oncoming vehicle **26** when illumination range **24** is reduced. This allows the driver of controlled vehicle **22** to better see the edge of the road, road signs, pedestrians, animals, and the like that may be on the curb side of controlled vehicle **22**. In a preferred embodiment, control unit **44** may determine if any leading vehicle **28** is in a curb lane on the opposite side of controlled vehicle **20** from oncoming traffic and is in the glare area, if not, reducing illumination range **24** includes aiming headlamps **22** away from the direction of oncoming traffic. If a leading vehicle is detected in a curb lane, illumination range **24** is reduced without changing the horizontal aim of headlamps **22**.

Referring now to FIG. **3**, a flow diagram of a method for controlling continuously variable headlamps in different ambient lighting conditions according to the present invention is shown. For FIG. **3** and for each additional flow diagram shown, operations are not necessarily sequential operations. Similarly, operations may be performed by software, hardware, or a combination of both, The present invention transcends any particular implementation and aspects are shown in sequential flow chart form for ease of illustration.

During twilight, different drivers or automated headlamp systems will turn on headlamps and running lights at different times. Since the present invention relies on detecting headlamps of oncoming vehicles **26** and tail lamps of leading vehicles **28**, there may be a period of time between when controlled vehicle **20** has headlamps tuned on and when vehicles **26**,**28** can be detected. To accommodate various ambient light conditions at which headlamps and tail lamps of vehicles **26**,**28** may be turned on, an embodiment of the present invention uses two thresholds for system operation.

The ambient light level is detected in block **90**. In block **92**, the ambient light level is compared to a day threshold. When the ambient light level is greater than the day

threshold, headlamps are set to daylight mode in block **94**. Daylight mode may include turning on daylight running lamps (DRLs).

In an embodiment of the present invention wherein controlled vehicle includes headlamps, such as continuously variable headlamps **22**, which produce illumination by heating at least one filament, the effective filament life may be extended by causing a low amount of current to flow through the element when the headlamp is not controlled to emit light. The amount of current is large enough to heat the filament without causing the filament to emit light. This heating makes the filament less brittle and, hence, less susceptible to shock and vibration damage.

When ambient light levels fall below the day threshold, the ambient light level is compared to the night threshold in block **96**. If the ambient light level is less than the day threshold but greater than the night threshold, headlamps are set to low beam mode in block **98**. In low beam mode, either standard low beam headlamps may be turned on or continuously variable headlamps **22** may be set to an illumination range **24** corresponding to a low beam pattern. Running lights including tail lamps may also be turned on.

When ambient light levels fall below the night threshold level, automatic headlamp dimring is enabled in block **100**. During automatic headlamp dimming mode, control unit **44** acquires an image in front of headlamps **22**. The image covers the glare area including points at which the drivers of oncoming vehicles **26** or leading vehicles **28** would perceive headlamps **22** to cause excessive glare. Control unit **44** processes the image to determine if any vehicles **26**,**28** are within the glare area. If at least one vehicle **26**,**28** is within the glare area, control unit **44** reduces headlamp illumination range **24**. Otherwise, headlamp illumination range **24** is set to full illumination range.

Several benefits, in addition to reducing glare seen by drivers of oncoming vehicles **26** and leading vehicles **28**, are achieved by the present invention. Studies have shown that many drivers rarely use high beams either out of fear of forgetting to dim the high beams, out of unfamiliarity with high beam controls, or due to preoccupation with other aspects of driving. By automatically providing the full range of illumination when oncoming vehicles **26** and leading vehicles **28** are not present, the driver of controlled vehicle **20** will experience greater visibility.

Another benefit achieved by the present invention is the ability to illuminate areas in front of controlled vehicle **20** currently not legally permitted. Current limitations on high beam aiming are based, in part, on not completely blinding the drivers of oncoming vehicles **26** if the high beams are not dimmed. Using control system **40**, illumination range **24** may be expanded to better illuminate overhead and roadside signs, greatly aiding in night navigation. Because the present invention automatically decreases illumination range **24** due to an approaching oncoming vehicle **26** or leading vehicle **28**, the risk of temporarily blinding the driver of vehicles **26**,**28** is greatly reduced.

Referring now to FIG. **4**, a flow diagram of automatic headlamp dimming according to the present invention is shown. The methods described in FIGS. **4** through **6** are more fully described in U.S. Pat. No. 5,837,994 entitled "Control System to Automatically Dim Vehicle Head Lamps" by J. Stam, J. Bechtel, and J. Roberts, which is hereby incorporated by reference.

Control unit **44** is used to acquire and examine images obtained through imaging system **42** to detect the presence of vehicles **26**,**28**. An image is acquired through the cyan filter in block **110**. A loop, governed by block **112**, selects the next pixel to be processed. The next pixel is processed in block **114** to detect the presence of headlamps. A method for detecting the presence of headlamps is described with regards to FIG. **6** below. A check is made to determine if any headlamps for oncoming vehicles **26** are found in block **116**. Generally, headlamps of oncoming vehicles **26** appear much brighter than tail lamps of leading vehicles **28**. Hence, the gain for images used to search for tail lamps is greater than the gain-used to search for headlamp images. Therefore, headlamps of oncoming vehicles **26** appearing in an image used to search for tail lamps may wash out the image. If no headlamps are found, images are acquired through cyan and red filters in block **118**. A loop, governed by block **120**, is used to select each image pixel through the red filter and corresponding image pixel through the cyan filter. Each red image pixel and corresponding cyan image pixel are processed in block **122** to detect the presence of tail lamps. A method that may be used to detect tail lamps using red and cyan image pixels is described with regards to FIG. **5** below. Once the check for headlamps and, if no headlamps are detected, the check for tail lamps are completed, the illumination range is controlled in block **124**. Various alternatives for controlling illumination range **24** of continuously variable headlamps **22** are described with regards to FIGS. **2** and **3** above and to FIGS. **7** through **13** below.

Alternatives to the method shown in FIG. **4** are possible. For example, the image obtained through the cyan filter in block **110** may be used as the image obtained through the cyan filter in block **116**.

Referring now to FIG. **5**, a flow chart of a method for detecting tail lamps according to an embodiment of the present invention is shown. Pixels in image array sensor **52** that image light **50** through the red filter in vehicle imaging lens system **48** are examined.

The location of each pixel within image array sensor **52** is first determined to be within the tail lamp window in block **130**. In a preferred embodiment of the present invention, image array sensor **52** contains more pixels than are necessary to acquire an image through the red and cyan filters having sufficient resolution. These additional pixels can be used to compensate for imperfections in ailing imaging system **42** relative to controlled vehicle **20**. By including additional rows and columns of pixels, rows and columns of pixels on the edge of image array sensor **52** may be disregarded to compensate for aiming variations. Methods for aiming imaging system **42** relative to controlled vehicle **20** will be described with regards to FIGS. **9** through **13** below. If the pixel is not determined to be within the tail lamp window, the flow diagram is exited and the next pixel is selected for examination as in block **132**.

If the pixel selected from the red image is within the tail lamp window, the value of the pixel is compared to the corresponding pixel from the cyan image in block **134**. A decision is made in block **136** based on the comparison. If the red pixel is not N % greater than the cyan pixel, the next red pixel is determined as in block **132**. Several criteria may be used to determine the value of N. N may be fixed. N may also be derived from the ambient light level. N may further be based on the spatial location of the examined pixel. Distant leading vehicle **28** in front of controlled vehicle **20** may be subjected to illumination **24** at full range intensity. Thus, a lower value for N may be used for pixels directly in front of controlled vehicle **20** while a higher value for N may be used for pixels corresponding to areas not directly in front of controlled vehicle **20**.

Once the examined pixel is determined to be sufficiently red, one or more brightness thresholds are determined in

block **138**. The intensity of the red pixel is then compared to the one or more thresholds in block **140**. If the examined red pixel is not sufficiently bright enough, the next pixel to be examined is determined as in block **132**. The one or more thresholds may be based on a variety of factors. A threshold may be based on the average illumination level of surrounding pixels. It may also be based on settings for image array sensor **52** and analog-to-digital converter **64**. The average pixel intensity over the entire image may also be used to set a threshold. As in the case of N, the threshold may also be determined by the pixel spatial location. For example, the threshold for pixels outside of 6° right and left of center should correspond to a light level incident on image array sensor **52** of about 12 times as bright as the threshold of red light directly in front of controlled vehicle **20** and pixels between 3° and 6° lateral angle should have a light level about 4 times as bright as a pixel imaged in front of controlled vehicle **20**. Such spatial varying thresholds help to eliminate false tail lamp detection caused by red reflectors along the side of the road.

Once the examined pixel is determined to be sufficiently red and determined to have a sufficient illumination level, the pixel is added to a tail lamp list in block **142**. Pixels are filtered for reflector recognition in block **144**. The position of each pixel in the tail lamp list is compared to the position of pixels in the tail lamp lists from previous images to determine if the pixels represent tail lamps or roadside reflectors. Several techniques may be used. First, rapid rightward motion of a pixel over several frames is a strong indication that the pixels are imaging a stationary reflector. Also, since the speed at which controlled vehicle **20** overtakes leading vehicle **28** is much less than the speed at which controlled vehicle **20** would overtake a stationary reflector, the rate of increase in brightness of pixels would be typically much greater for a stationary reflector than for tail lamps on leading vehicle **28**. A decision is made in block **46** to determine if the pixel is a reflector image. If not, a determination is made that a tail lamp has been detected in block **148**.

Referring now to FIG. **6**, a flow chart of a method for detecting headlamps according to an embodiment of the present invention is shown. A pixel from image array sensor **52** is selected from a region viewing light **50** through vehicle image lens system **48** having a cyan filter. The pixel to be examined is first checked to determine if the pixel is within the headlamp window in block **160**. As in block **130** in FIG. **5** above, block **160** permits corrections in the aiming of imaging system **42** by not using all rows and columns of image array sensor **52**. If the examined pixel is not within the headlamp window, the flow chart is exited and the next pixel is obtained as in block **162**.

A check is made in block **164** to determine if the examined pixel is greater than an upper limit. If so, a determination is made that a headlamp has been detected in block **166** and the flow chart is exited. The upper limit used may be a fixed value, may be based on the ambient light level, and may also be based on the spatial location of the examined pixel.

If the upper limit in intensity is not exceeded, one or more thresholds are calculated in block **168**. A comparison is made in block **170** to determine if the intensity of the examined pixel is greater than at least one threshold. If not, the next pixel to be examined is determined in block **162**. As in block **138** in FIG. **5** above, the one or more thresholds may be determined based on a variety of factors. The ambient light level may be used. Also, the average intensity of pixels surrounding the examined pixel may be used. Further, the vertical and horizontal spatial location of the examined pixel may be used to determine the threshold.

If the examined pixel is greater than at least one threshold, the pixel is added to the headlamp list in block **172**. Each pixel in the headlamp list is filtered for recognition as a street lamp in block **174**. One filtering method that may be used is to examine a sequence of pixels in successive frames corresponding to a potential headlamp. If this light source exhibits alternating current (AC) modulation, the light source is deemed to be a street lamp and not a headlamp. Another method that may be used is the relative position of the light source in question from frame to frame. If the light source exhibits rapid vertical movement, it may be deemed a street lamp. A determination is made in block **176** as whether or not the light source is a street lamp. If the light source is not a street lamp, a decision is made that a headlamp has been detected in block **178**.

Referring to FIG. **7**, a schematic diagram illustrating reducing headlamp illumination range according to an embodiment of the present invention is shown. Controlled vehicle **20** has continuously variable headlamp **22** with adjustable elevational aim. Imaging system **42** is mounted in the rearview mirror mounting bracket and aimed to look through the windshield of controlled vehicle **20**. In this position, imaging system **42** is approximately 0.5 meters above the plane of continuously variable headlamps **22**. When oncoming vehicle **26** is detected, an angle is calculated between the direction of vehicle forward motion **190** and the headlamps of oncoming vehicle **26**. This inclination angle **192** is used to aim continuously variable headlamps **22**. The elevational direction of the upper extent of illumination range **24**, indicated by **194**, is set to be approximately parallel with a line from imaging system **42** to the headlamps of oncoming vehicle **26**. This places beam upper extent **194** approximately 0.5 meters below the headlamps of oncoming vehicle **26**, thereby providing aiming tolerance, lighting the road nearly to oncoming vehicle **26**, and avoiding striking the eyes of the driver of oncoming vehicle **26**. If multiple vehicles **26** are detected, beam upper extent **194** is set to be substantially parallel with the greatest of the determined elevational angles **192**.

In an embodiment, the adjustment range of continuously variable headlamps **22** may be restricted, particularly when angle **192** is substantially above or below a normal level. When one or more vehicle pitch sensors **70** are also used, control system **40** may base the aiming of headlamps **22** on output from imaging system **42** when lamps of oncoming vehicles **26** or leading vehicles **28** have been located and leveling control may be used otherwise. In yet another embodiment, input from vehicle pitch sensors **70** may be used to calculate a limit on how high to set beam upper extent **194** to keep the beam elevation within regulated ranges. Inputs from vehicle speed sensor **72** may be used to anticipate acceleration of controlled vehicle **20** to maintain the proper inclination for beam upper extent **194**.

Referring now to FIG. **8**, a flow diagram of an alternative method for reducing headlamp illumination range according to the present invention is shown. An image is acquired in block **200** and a determination is made to see if any vehicle is within the glare area in block **202**. Techniques for determining the presence of oncoming vehicle **26** or leading vehicle **28** have been described with regards to FIGS. **4** through **6** above. If no vehicle is detected,,the illumination range is set to full range in block **204**.

If a vehicle is detected within the glare area, the illumination range is decreased incrementally in block **206**. This

results in illumination range **24** being decreased at a predetermined rate over a predetermined transition time. Several techniques are available for decreasing illumination range **24**. First, the intensity of light emitted by continuously variable headlamp **22** may be decreased. Second, headlamps **22** may be aimed downward. Third, headlamps **22** may be aimed horizontally away from the direction of oncoming vehicle **26**. In a refinement of the last option, a check is made to determine if any leading vehicles **28** are in curb lanes on the opposite side of controlled vehicle **20** from oncoming vehicle **26**. If any leading vehicles **28** are detected, continuously variable headlamps **22** are not aimed toward the curb lane. The rate at which illumination range **24** is decreased may be constant or may be a finction of parameters including the current inclination angle of continuously variable headlamps **22**, the estimated range of oncoming vehicle **26** or leading vehicle **28**, ambient light levels, and the like.

Depending on the automatic headlamp dimming technique used, precise measurements of camera-to-vehicle and headlamp-to-camera angles may be required. Concerning the latter, the difference between the direction that control system **40** commands the beam of continuously variable headlamp **22** versus the actual direction of the beam of headlamp **22** relative to imaging system **42** is a critical system parameter. For example, low beams are designed to provide a very sharp transition from a relatively strong beam with beam upper extent **194** projected about 1.5° downward to a greatly diminished intensity which is normally viewed by drivers of vehicles **26**,**28** in the path of the beams. Thus, errors of 0.5°, particularly in the elevational direction, are significant. Errors of 2° are likely to subject drivers of vehicles **26**,**28** to intolerable glare from direct, prolonged exposure to brighter portions of illumination range **24** as if headlamp **22** had not been dimmed at all. The position of illumination range **24** relative to imaging system **42** may be determined using control system **40**.

In one embodiment, the position of illumination range **24** is sensed directly relative to the lights of oncoming vehicles **26** and leading vehicles **28** as adjustments to illumination range **24** are being made. In an alternative embodiment, illumination range **24** is momentarily delayed from returning to full range. A sequence of images is taken containing beam upper extent **194**. If controlled vehicle **20** is in motion and the beam pattern stays the same in each of the sequence of images, control vehicle **20** can be assumed to be moving on a straight and level road. Beam upper extent **194** can then be determined relative to imaging system **42** by looking for a sharp transition between very bright and very dim regions in the output of image array sensor **52**. The intensity of illumination range **24** may also be varied during the sequence of images to ensure that the bright-to-dim transition is actually caused by continuously variable headlamp **22**. Experimentation is required to determine a reasonable minimum speed, length of time, and number of frames to obtain satisfactorily consistent measurements for a particular implementation.

A method for aiming imaging system **42** relative to controlled vehicle **20** is to precisely position controlled vehicle **20** in front of a target that can be seen by imaging system **42**. This method is ideally suited to the automobile manufacturing process where aiming imaging system **42** may be incorporated with or replace current headlamp aiming. Vehicle dealerships and repair shops may be equipped with similar targetting apparatus.

Referring now to FIGS. **9** through **13**, a method for establishing the aim of imaging system **42** relative to controlled vehicle **20** that may be performed during the normal operation of controlled vehicle **20** is described. This method may be used in conjunction with the targeting method described above.

Referring now to FIG. **9**, an illustration of street lamp imaging is shown. Image **220** represents an output from imaging system **42** showing how street lamp **222** might appear in a sequence of frames. By noting changes in the relative position of street lamp **222** in image **220**, the vertical and horizontal aim of imaging system **42** relative to controlled vehicle **20** forward motion can be determined. For simplicity, the following discussion concentrates on determining vertical angle. This discussion can be extended to determining horizontal angle as well.

Referring now to FIGS. **10***a* and **10***b*, schematic diagrams of apparent street light elevational angle as a function of camera-to-vehicle inclination angle are shown. In FIG. **10***a*, imaging system axis **230** is aligned with vehicle forward motion direction **190**. Imaging system axis **230** can be thought of as a normal to the plane of image array sensor **52**. Over a sequence of images, street lamp **222** appears to be approaching imaging system **42**. The angle between street lamp **222** and imaging system axis **230**, shown by **232**, increases linearly.

In FIG. **10***b*, imaging system **42** is not aimed in the direction of vehicle forward motion **190**. In particular, vehicle forward motion direction **190** and imaging system axis **230** form inclination angle **234**. Therefore, in a sequence of images, street lamp elevational angle **232** appears to increase in a non-linear fashion.

Referring now to FIG. **11**, a schematic diagram illustrating street lamp elevational angle calculation according to an embodiment of the present invention is shown. Image array sensor **52** in imaging system **42** is represented as an array of pixels, one of which is shown by **240**. The number of pixels **240** shown in FIG. **11** is greatly reduced for clarity. Vehicle imaging lens system **48** is represented by single lens **242**. Street lamp **222** is imaged by lens **242** onto image array sensor **52** as street lamp image **244**. Street lamp elevational angle **232**, shown as θ, can be calculated by equation 1:

$$\tan(\theta) = \left(\frac{(IRN - RRN) \cdot PH}{FL}\right) \qquad \text{(EQ. 1)}$$

where RRN (Reference Row Number) is the row number corresponding to imaging system axis **230**, IRN (Image Row Number) is the row number of street lamp image **244**, PH is the row height of each pixel **240**, and FL is the focal length of lens **242** relative to image array sensor **52**.

Referring now to FIG. **12**, a graph illustrating street lamp elevational angles for three different camera-to-vehicle inclination angles is shown. Curves **250**, **252**, **254** show the cotangent of the inclination angle as a function of simulated distance for street lamp **222** that is five meters high. Images are taken at 20 meter intervals from 200 to 80 meters as controlled vehicle **20** approaches street lamp **222**. For curve **250**, imaging system axis **230** is aligned with vehicle forward motion direction **190**. For curve **252**, imaging system axis **230** is one-half degree above vehicle forward motion direction **190**. For curve **254**, imaging system axis **230** is one-half degree below vehicle forward motion direction **190**. Curve **250** forms a straight line whereas curve **252** is concave upward and curve **254** is concave downward.

Referring now to FIG. **13**, a flow diagram of a method for calculating camera-to-vehicle inclination angle according to an embodiment of the present invention is shown. A count of the number of images taken is reset in block **260**. The

image count is compared to the maximum count (max count) required in block **262**. The number of images required should be determined experimentally based on the type of imaging system **42** used and the configuration of imaging system **42** in controlled vehicle **22**. If the image count is less than the maximum count, the next image is acquired and the image count is incremented in block **264**.

A light source is found in the image in block **266**. If this is the first image in a sequence or if no suitable light source has been previously found, a number of light sources may be marked for potential consideration. If a light source has been found in a previous image in the sequence, an attempt is made to find the new position of that light source. This attempt may be based on searching pixels in the last known location of the light source and, if a sequence of positions is known, may be based on extrapolating from the sequence of light source images to predict the next location of the light source.

A check is made to determine if the light source is stationary in block **268**. One check is to determine if the light source exhibits AC modulation by examining light source intensity over successive images. Another check is to track the relative position of the light source in the sequence of images. If the light source is not stationary, the image count is reset in block **270**. If the light source is stationary, an elevational measure is calculated in block **272**. A technique for calculating elevational angle was described with regards to FIG. **11** above.

When each image in a sequence of max count images contains a stationary light source, elevational measurements are validated in block **274**. As indicated with regards to FIG. **12** above, a sequence of elevational measurements for a stationary light source, when expressed as the cotangent of the angle as a function of distance, forms either a straight line, a concave upward curve, or a concave downward curve. The sequence of elevational measurements is examined to ensure that the sequence fits one of these patterns. If not, the sequence is discarded and a new sequence is obtained.

In an embodiment of the present invention, a check is made to determine if the sequence of images was acquired during relatively steady travel at relatively constant speed. If not, the sequence is discarded and a new sequence is obtained. Constant speed can be checked using the output of speed sensor **72**. Steady travel may be checked by examining the relative positions of stationary and non-stationary light sources over a sequence of frames.

The image elevation relative to the vehicle is determined in block **276**. If the sequence of elevational measurements does not form a straight line, inclination angle **234** may be estimated by adding a constant value representing the radiant value correction to each of the tangent values to arrive at a corrected tangent value. The reciprocal of the new values are taken and analyzed to determine the difference between successive values. If the difference is zero, the correction value is the tangent of inclination angle **234**. If the sequence of differences is not zero, the concavity of the new sequence is determined. If the concavity direction of the new sequence is the same as the original sequence, the correction value is increased. If the concavity directions are opposite, the correction factor is decreased. A new sequence of differences is then obtained and the process is repeated.

Referring now to FIG. **14**, a cross-sectional drawing of an imaging system that may be used to implement the present invention is shown. A similar imaging system is more completely described in U.S. Pat. No. 6,130,421 entitled "Imaging System for Vehicle Headlamp Control" by J. Bechtel, J. Stam, and J. Roberts, which is hereby incorporated by reference. Imaging system **42** includes housing **280** which holds vehicle imaging lens system **48** and image array sensor **52**. Housing **280** defines aperture **282** which opens onto a scene generally in front of controlled vehicle **20**. Support **284** serves to hold red lens **286** and cyan lens **288** and serves to prevent light coming through aperture **282** and not passing through a lens **286**, **288** from striking image array sensors **52**. As is further described with regards to FIG. **15** below, image array sensor **52** has a first region for receiving light transmitted by red lens **286** and a second, non-overlapping region for receiving light transmitted by cyan lens **288**. Aperture **282**, the spacing between lenses **286**, **288**, and baffle **290** are designed to minimize the amount of light passing through one of lens **286**, **288** and striking the portion of image sensor **52** used to image light from the other of lens **286**, **288**.

An embodiment of lenses **286**, **288** will now be described. Lenses **286**, **288** may be manufactured on a single plate of polymer, such as acrylic, shown as **292**. The polymer may optionally include infrared filtration, ultraviolet filtration, or both. Each lens **286**, **288** is plano-convex with the forward facing surface convex and aspheric. The front surface of each lens **286**, **288** may be scribed by equation 2:

$$Z = \frac{cr^2}{1 + \sqrt{1 - (1 + k)c^2 r^2}} \qquad \text{(EQ. 2)}$$

where Z is the value of the height of the lens surface along the optical surface as a function of the radial distance r from the optical axis, c is the curvature, and k is the conic constant. For the front surface of red lens **286**, c equals 0.456 mm^{-1} and k equals −1.0. For the front surface of cyan lens **288**, c equals 0.446 mm^{-1} and k equals −1.0. Lenses **286**, **288** have a diameter of 1.1 mm and have centers spaced 1.2 mm apart. At the center, each lens **286**, **288** is 1.0 mm. Plate **292** is mounted to baffle **284** such that the back of each lens **286**, **288** is 4.0 mm in front of image array sensor **52**. This distance is indicated by focal length FL in FIG. **14**. Red and cyan filters are printed onto the rear flat surfaces of red lens **286** and cyan **288** respectively using screen, pad, or other printing techniques. The red filter substantially transmits light of wavelengths longer than 625 nm while attenuating light of wavelength shorter than 625 nm. The cyan filter substantially transmits light of wavelength shorter than 625 nm while attenuating light of wavelength longer than 625 nm. The preferable field of view afforded by lenses **286** and **288** is 10° high by 20° wide.

Referring now to FIG. **15**, a schematic diagram of image array sensor subwindows that may be used to implement the present invention are shown. Image array sensor **52** includes an array of pixel sensors, one of which is indicated by **240**, arranged in rows and columns. Image array sensor **52** includes top border **302**, bottom border **304**, left border **306**, and right border **308** defining a region covered by pixel sensors **240**. Image array sensor **52** is divided into several subwindows. Upper subwindow **310** is bounded by borders **308**, **312**, **314**, and **316**, and contains pixel sensors **240** struckby an image projected through red lens **286**. Lower subwindow **318** is bounded by borders **308**, **320**, **314**, and **322**, and includes pixel sensors **240** onto which an image is projected through cyan lens **288**.

Lenses **286**, **288** provide a field of view in front of controlled vehicle **20** such as, for example, 22° wide by 9° high. A space between border **312** and top edge **302** and between borders **316** and **324** allow for an elevational adjustment to correct for misalignment of imaging system

42 in controlled vehicle **20**. To accomplish the adjustment, upper subwindow **310**, defined by borders **312** and **316**, are moved up or down within the range between top edge **302** and border **324**. Similarly, borders **320** and **322** represent boundaries for lower subwindow **318** that may be moved between bottom edge **304** and border **326**. Pixel sensors **240** that lie within the region between borders **324** and **326** may receive light from both red lens **286** and cyan lens **288**. Therefore, this region is not normally used as part of the active imaging area. Although only elevational adjustment has been described, lateral adjustment is also possible.

Pixel sensors **240** lying between left edge **306** and border **314** may be used for ambient light sensing. Ambient light sensing is described with regards to FIG. **20** below.

In a preferred embodiment of the present invention, image array sensor **52** includes a 256×256 array of square pixel sensors **240**. In an alternative embodiment, pixel sensor **52** includes a 256×128 square array of rectangular pixels, resulting in a vertical resolution greater than the horizontal resolution.

Referring now to FIG. **16**, aschematic diagram of an embodiment of an image array sensor that may be used to implement the present invention is shown. Pixel sensor **240** and the technique for correlated double sampling shown are described in U.S. Pat. No. 5,471,515 entitled "Active Pixel Sensor With Intra-Pixel Charge Transfer" to E. Fossum, S. Mendis, and S. Kemeny, which is hereby incorporated by reference. The circuitry described can be built using standard CMOS processes. Devices similar to image array sensor **52** are available from Photobit Corporation of Pasedena, Calif.

Image sensor array **52** includes an array of pixels **240**. Light striding photogate transistor **330** in each pixel **240** generates electrical charge which is accumulated beneath photogate transistor **330**. During charge collection, the gate of photogate transistor **330** is held at a positive voltage to create a well beneath photogate transistor **330** to hold the accumulated charge. The gate of gate electrode **332** is held at a less positive voltage, V_{TX}, to form a barrier to the flow of electrons accumulated beneath photogate transistor **330**. In an embodiment, V_{TX} is 3.8 volts relative to VSS. When charge readout is desired, the gate of photogate transistor **330** is brought to a voltage less than V_{TX}. The accumulated charge then flows from photogate transistor **330** through gate electrode **332** to the region beneath floating diffusion **334**. Floating diffusion **334** is connected to the gate of n-channel FET **336** which has its drain connected to supply voltage VDD. Typically, VDD is 5.0 volts referenced to VSS. The gate of photogate transistor **330** is returned to its original voltage. A potential proportional to the accumulated charge can now be sensed at the source of FET **336**.

During charge transfer and readout, the gate of reset electrode **338** is held at a low positive voltage to form a barrier to electrodes beneath floating diffusion **334**. When the gate of reset electrode **338** is brought to a high positive voltage, charge collected beneath floating diffusion **334** is transferred through the region beneath reset electrode **338** and into drain diffusion **340** which is connected to VDD. This brings the source of FET **336** to an initial or reset potential. By subtracting this reset potential from the illumination potential proportional to accumulated charge, a great degree of fixed pattern noise may be eliminated. This technique is known as correlated double sampling.

Pixel sensors **240** are arranged in row and columns. In a preferred embodiment, all of the pixels in a row of a selected subwindow are read simultaneously into readout circuits, one of which is indicated by **342**. One readout circuit **342** exists for each column. The row to be read is selected by a row address, indicated generally as **344**. Row address **344** is fed into row decoder **346** causing the row select line **348** corresponding to row address **344** to become asserted. When row select line **348** is asserted, n-channel FET **350** is turned on, allowing the potential at the source of FET **336** to appear on column readout line **352**. All pixels **240** in each column are connected to a common column readout line **352**. However, since each pixel in the column has a unique row address, only one row select line **348** can be asserted resulting in at most one FET **336** source potential appearing on column readout line **352**.

Two control signals provide the timing for gating charge in each pixel **240**. Photogate signal (PG) **354** is a high asserting signal indicating when charge is to be transferred from photogate transistor **330** to floating diffusion **334**. Each row has gate **356** which ANDs photogate signal **354** and row select line **348** to produce row photogate signal **358** which is connected to the gate of each photogate transistor **330** in the row. Row reset signal (RR) **360** is a high asserting signal indicating when floating diffusions **334** should be returned to the reset potential. Each row has gate **362** which ANDs row reset signal **360** with the appropriate row select line **348** to produce reset signal **364** which is connected to the gate of each reset electrode **338** in the row.

Voltages at the source of FET **336** are dropped across load FET **366** when FET **350** is on. Load FET **366** is an n-channel device with a fixed gate voltage of V_{LN}. In this embodiment, V_{LN} is approximately 1.5 volts referenced to VSS. Each pixel **240** may contain load FET **366** or, as is shown in FIG. **16**, one load FET **366** may be used for each column.

Readout circuit **342** provides sample-and-hold for potentials on column readout line **352** as well as output buffering. Two input signals control each readout circuit **342**. Sample-and-hold reset signal (SHR) **368** turns on n-channel FET **370** allowing the potential on column readout line **352** to charge capacitor **372**. Capacitor **372** is used to store the reset potential. Sample-and-hold illumination signal (SHS) **374** turns on n-channel FET **376**. Tis permits the potential on column readout line **352** to charge capacitor **378**. Capacitor **378** is used to hold the illumination potential proportional to the charge accumulated by photogate transistor **330**.

At the end of a complete readout operation, the reset potential and illumination potential from each pixel **240** in a selected row are stored in capacitors **372**, **378** in each readout circuit **342**. A column address, shown generally by **380**, is input into decoder **382** asserting corresponding column select line **384**. Each column select line **384** controls an associated readout circuit **342** to determine which readout circuit **342** will be driving common output lines SIGOUT **386** holding the illumination potential and RSTOUT **388** holding the reset potential. Buffer **390**, with input connected across capacitor **378** and output connected to SIGOUT **386**, and buffer **392**, with input connected across capacitor **372** and output connected to RSTOUT **388** in each readout circuit **342** are enabled by the appropriate column select line **384**.

Referring now to FIGS. **17***a* through **17***e*, a schematic diagram of an embodiment of the present invention is shown. Much of the circuitry shown in FIGS. **17***a* and **17***b* is described in U.S. Pat. No. 5,990,469 entitled "Control Circuit For Image Array Sensors" to J. Bechtel and J. Stam, which is hereby incorporated by reference.

In FIG. **17***a*, image array sensor **52** is shown as integrated circuit chip U7. Biasing circuitry **400** is used to set the various voltage levels, such as V_{TX} and V_{LN}, required by image array sensor **52**. Output SIGOUT **386** and RSTOUT

388 are the illumination potential and reset potential respectively for pixel 240 selected by row address 344 and column address 380. Difference amplifier 402, such as the AD 830 High Speed, Video Difference Amplifier by Analog Devices, accepts SIGOUT 386 and RSTOUT 388 and produces noise reduced signal 404. Analog-to-digital converter 406, such as LTC 1196 by Linear Technology, accepts noise reduced signal 404 and produces digitized signal (ADDATA) 408. The analog-to-digital conversion is started by asserting conversion signal (CONVST) 410. The converted value is serially shifted out at a rate determined by the input ADC clock signal (ADCLK) 412.

The integrated circuit designated U4 and associated components regulate the approximately 12 volt car battery output to a 5 volt VCC supply voltage. The integrated circuit U3 and associated components produces a conditioned 5 volt supply signal.

In FIG. 17*b*, application specific integrated circuit (ASIC) 414 is shown. ASIC 414 contains much of the logic for controlling image array sensor 52 and analog-to-digital converter 406 as well as for communicating with processor 66. In the embodiment shown, ASIC 414 is an XC4003E from Xylinx. However, it is well known in the art that a wide range of means are available for implementing the logic in ASIC 414 including discrete logic, custom VLSI integrated circuits, various FPGAs, programmable signal processors, and microcontrollers. The logic implemented by ASIC 414 is described with regards to FIG. 18 below. Serial memory 416, such as the AT17C65 by Atmel, is configured to store and automatically download the code describing the designed logical operation into ASIC 414 each time power is first applied. Clock signal 418, labeled OSC, is generated by processor 66 and drives the sequential logic in ASIC 414.

ASIC 414 communicates with processor 66 using three lines. Data is shifted serially between ASIC 414 and processor 66 on master out slave in (MOSI) 420 at a rate determined by serial peripheral serial clock (SPSCLK) 422 in a direction determined by slave select (SSI) 424. When SSI 424 is asserted, processor 66 is the master and ASIC 414 is the slave. Processor 66 shifts instruction words into ASIC 414. In this mode, processor 66 drives SPSCLK 422. During instruction execution, processor 66 deasserts SSI 424 making ASIC 414 the master and processor 66 the slave. ASIC 414 shifts digitized, noise reduced intensity signals to processor 66. In this mode, ASIC 414 generates SPSCLK 422.

As technology improves, it is desirable to locate image array sensor 52, difference amplifier 402, ADC 406, and the logic implemented in ASIC 414 on a single integrated circuit chip. It may be possible to include processor 66 on such a chip as well.

In FIG. 17*c*, processor 66 and associated electronics are shown. Processor 66 may be an H8S2128 microcontroller from Hitachi. Processor 66 generates instructions for ASIC 414 that determine, in part, which subwindows of image array sensor 52 will be examined. Processor 66 receives digitized intensities from each pixel 240 in designated subwindows of image array sensor 62. Processor 66 uses these intensities to carry out the methods described with regards to FIGS. 3 through 13 above for controlling continuously variable headlamps 22. One necessary function is control of the gain for images acquired using image array sensor 52. As described with regards to FIG. 4 above, the gain for an image used to detect the tail lamps of leading vehicles 28 needs to be greater than the gain for an image used to detect headlamps of oncoming vehicles 26. One or more of several means are possible for controlling image array sensor 52 gain. First, the integration time of pixels 240 can be varied. Second, the reference voltage, VREF, of ADC 406 can be changed. Third, difference amplifier 402 can have a variable, controllable gain. Fourth, a variable aperture or a variable attenuator, such as an electrochromic window, can be placed in the path of light striking image array sensor 52.

The types and numbers of control signals required for headlamps 22 depend on headlamp configuration in controlled vehicle 20. For the embodiment described below, controlled vehicle 20 has two continuously variable high beam headlamps 22 and two continuously variable low beam headlamps 22. Each high beam headlamp 22 can be vertically and horizontally aimed using stepper motors. The intensity of both high beam headlamps 22 is controlled by a single pulse width modulated signal. The two low beam headlamps 22 are not steerable but have intensities controlled by a single pulse width modulated signal. It is apparent to one of ordinary skill in the art that the present invention can control various configurations of continuously variable headlamps 22.

Processor 66 includes a first set of control signals, shown generally by 426, for controlling the aim of the left high beam headlamp. A similar set of eight control signals, shown generally by 428, are used to control the aim of the right high beam headlamp. Labels have been left off right aim control signals 428 for clarity. A description of aim control signals 426,428 is provided with regard to FIG. 17*e* below. Processor. 66 also generates high beam modulated signal 430 which is buffered to become high beam pulse width modulated signal (PWM) 432. Identical circuitry may be connected to low beam modulated signal 434. This circuitry has been omitted for clarity. Headlamp controller 76 using PWM signal 432 is described with regards to FIG. 17*d* below.

In FIG. 17*d*, headlamp system 46 includes incandescent headlamp 22 and headlamp intensity controller 76. Headlamp intensity controller 76 includes a power FET, such as the IRFZ44N by International Rectifier. The intensity of light emitted by headlamp 22 is proportional to the duty cycle of PWM signal 432. A base frequency for PWM signal 432 of 2,000 Hz is preferred. Higher frequencies may increase the power dissipation of the power FET.

In FIG. 17*e*, headlamp system 46 includes headlamp 22 with variable vertical and horizontal aiming and headlamp controller 76 for providing aiming signals. Headlamp 22 includes vertical stepper motor 440 for controlling vertical aim direction and horizontal stepper motor 442 for controlling horizontal aim direction. Headlamp 22 also includes vertical home switch 444 and horizontal home switch 446 for indicating when headlamp 22 is in the home position. Vertical home switch 444 produces vertical home signal (VSW) 448. Horizontal home switch 446 produces horizontal home signal (HSW) 450. Vertical motor 440 is driven by motor controller 452, such as the SAA1042 by Motorola. Motor controller 452 has three inputs. Vertical direction (VDIR) 454 indicates the direction of rotation of motor 440 for each positive edge on vertical clock (VCLK) 456. Vertical step (VSTEP) indicates whether motor 440 will make a full step or a half step for each applied pulse of vertical clock 456. Horizontal motor controller 460 has horizontal direction (HDIR) 462, horizontal clock (HCLK) 464, and horizontal step (HSTEP) 466 which function similar to vertical direction 454, vertical clock 456, and vertical step 458 for vertical motor controller 452.

In an alternative embodiment using HID headlamps, the direction of light emitted from one or more headlamps 22 is changed using magnetodynamic positioning (MDP). HID headlamps operate by producing a charged arc in a gas such

as xenon. The arc may be perturbed by the presence of a magnetic field. Reflectors may be designed such that various perturbations of the arc produce changes in the direction, intensity, or both of light emitted by HID headlamp **22**. Aim control signals **426**,**428** from processor **66** may be replaced by analog or digital outputs determining the direction for aiming the output of HID headlamp **22**. Headlamps utilizing magnetodynamic positioning are being developed by Osram Sylvania Inc. of Danvers, Massachusetts.

Referring now to FIG. **18**, a block diagram illustrating registers and associated logic used to control the image control sensor is shown. The logic described below is more completely discussed in U.S. Pat. No. 5,990,469 entitled "Control Circuit For Image Array Sensors" to J. Bechtel, which is hereby incorporated by reference.

ASIC **414** includes control logic **480** which controls a collection of registers and associated logic. All but two of the registers are initially loaded with data from an instruction serially shifted over MOSI **420** from processor **66**. The path used to initialize the registers, indicated by **482**, is shown as a dashed line in FIG. **18**. The purpose for each of the registers and associated logic will now be described.

ASIC **414** can specify two subwindows within image array sensor **52**. The first subwindow is specified by low and high column addresses and low and high row addresses. The second subwindow is specified as having a column offset and a row offset from the first subwindow. Hence, the first and second subwindows have the same size. These two subwindows may be upper subwindow **310** and lower subwindow **318** described with regard to FIG. **15** above. As described with regards to FIG. **16** above, readout and reset of each pixel **240** occurs by rows. Alternate rows from each subwindow are obtained. Each pixel in the selected row of first subwindow is read and then each pixel in the selected row of the second subwindow is read.

Five registers are used to specify column address **380**. Second subwindow column offset register (SCO) **484** holds the column offset between the first subwindow and the second subwindow. Low column register (LC) **486** holds the starting column value for the first subwindow. High column register (HC) **488** holds the ending column value of the first subwindow. Active column register (AC) **490** holds the value of the currently examined column in the first subwindow. Column select register (CS) **492** holds column address **380**. Multiplexer **494** is initially set so that register AC **490** is loaded with the same column starting value as register LC **486** when processor **66** shifts an instruction into ASIC **414**. During instruction execution, multiplexer **496** is initially set so that register CS **492** is loaded with the value of register AC **490**. Register AC **490** is incremented to select each column in the first subwindow until the contents of register AC **490** is greater, than the final column value in register HC **488** as determined by comparator **498**. Register AC **490** is then reloaded with the starting column value from register LC **486** through multiplexer **494**. Multiplexer **496** is then set so that register CS **492** is loaded with the sum of register AC **490** and register SCO **484** produced by adder **499**. As register AC **490** is incremented, register CS **492** then holds successive column addresses **380** of the second subwindow.

Row address **344** is specified using six registers. Second subwindow row offset register (SRO) **500** holds the row offset between the first subwindow and the second subwindow. Low row register (LR) **502** holds the starting row address of the first subwindow. High row register (HR) **504** holds the ending row address of the first subwindow. Reset row register (RR) **506** holds the address of the first subwindow row for reset. ADC row register (AR) **508** holds the first subwindow row to be read out for analog-to-digital conversion. Row select register (RS) **510** holds row address **344**. Register RR **506** and register AR **508** are used to determine the integration time for each pixel **240**. If each row in image array sensor **52** is reset immediately prior to readout, a very short integration time results. If each row is reset immediately following readout, a longer integration period results, the length of which depends on the number of rows in the first subwindow. An additional means for farther extending integration time is described below. Four rows must therefore be considered, the reset row of the first subwindow, the reset row of the second subwindow, the conversion row of the first subwindow, and the conversion row of the second subwindow. Multiplexer **512** and multiplexer **514** are first set to pass the contents of register RR **506** into register RS **510**. This makes the reset row of the first subwindow row address **344**. Multiplexers **512**,**514** are then set so that register RS **510** is loaded with the sum of register RR **506** and register SRO **500** produced by adder **516**. This makes row address **344** the reset row of the second subwindow. Multiplexers **512**,**514** are then set to load register RS **510** with the contents of register AR **508**. This makes row address **344** the conversion row of the first subwindow. Multiplexers **512**,**514** are then set so that register RS **510** is loaded with the sum of register AR **508** and register SRO **500** produced by adder **516**. This makes row address **344** the conversion row of the second subwindow. Register RR **506** and register AR **508** are then incremented. When the contents of register RR **506** are greater than the ending row value held in register HR **504** as determined by comparator **518**, register RR **506** is reloaded with the starting row address of the first subwindow from register LR **502** through multiplexer **520**. When the value held in register AR **508** is greater than the ending row address in register HR **504** as determined by comparator **522**, register AR **508** is loaded with the starting address of the first-subwindow from register LR **502**.

Two registers allow an integration period greater than the frame period, which is defined as the time required to convert each row in the first subwindow. Integration frame delay register (IFD) **524** holds the two's complement of the number of frame periods for each integration period. Integration frame counter register (IFC) **526** is initially loaded through multiplexer **528** with the value loaded into register IFD **524** plus one provided by serial incrementer **530**. Incrementer **530** has an output indicating overflow. If register IFD **524** is initialized with negative one, incrementer **530** indicates an overflow. This overflow signals control logic **480** to perform row readouts during the next frame period. If an overflow does not occur from incrementer **530**, no row readout is performed during the next frame period. At the end of each frame period, the contents of register IFC **526** are passed through incrementer **530** by multiplexer **528** and incrementer **530** overflow is checked again. When overflow occurs, multiplexer **528** gates the contents of register IFD **524** through incrementer **530** into register IFC **526** and the process is repeated.

Reset frame count register (RFC) **532** is initialized with the two's complement of the number of frames to be read plus one. This value is used to indicate the number of times in which an instruction shifted in from processor **66** is to be repeated. At the end of each frame in which all rows of the first and second subwindows have been read, the overflow output of incrementer **534** is examined. If an overflow has occurred, the instruction is completed and no further processing occurs. If no overflow has occurred, the contents of register RFC **532** are passed through multiplexer **536** and incremented by incrementer **534**.

Outputs from comparators **498**, **518**, **522** and incrementers **530**, **534** are used by control logic **480** to generate internal control signals for multiplexers **494**, **496**, **520**, **512**, **514**, **528**, **536** and incrementers for registers **490**, **506**, **508** as well as for external control signals such as PG **354**, RR **360**, SHS **374**, SHR **368**, CONVST **410**, and ADCLK **412**.

Referring now to FIG. **19**, a timing diagram illustrating image array sensor control signals is shown. The timing diagram is provided to show timing relationships between signals and not necessarily precise times between signal events.

The beginning of the timing diagram in FIG. **19** corresponds with the start of an instruction execution by ASIC **414**. Row address (ROW) **344** is first set to the starting row of the first subwindow, as shown by **550**. Signals RR **360** and PG **354** are then asserted dumping any charge that may be beneath photogate **330** in each pixel **240** in row **550**, as shown generally by **552**. Row address **344** is then set to the first row of the second subwindow, as shown by **554**. Again, signals RR **360** and PG **354** are asserted, as shown by **556**, to reset all pixels **240** in second subwindow first row **554**. Row address **344** is then set to the first subwindow second row, as shown by **558**, and signals RR **360** and PG **354** are asserted as shown by **560**. This process continues by alternately resetting the next row from the first subwindow then the corresponding row from the second subwindow.

At some point in the furture, the time arrives to read the values from each pixel **240** in the first row of the first subwindow. Row address **344** is again set to first subwindow first row address **550**. Signal RR **360** is asserted, as shown by **562**, to dump any charge under floating diffusion **334**. Next, signal SHR **564** is asserted to gate the reset potential for each pixel **240** in first subwindow first row **550** into capacitor **372** of corresponding column readout circuit **342**. Next, signal PG **354** is asserted, as shown by **566**, to transfer charge accumulated under photogates **330** to floating diffusions **334**. Signal SHS **374** is then asserted, as shown by **568**, to gate the illumination potential for each pixel **240** into capacitor **378** of corresponding column readout circuit **342**. Integration period **569** is the time between deasserting signal PG **354** during reset **569** and asserting signal PG **354** during readout **566**.

The conversion process for each column in first subwindow first row **550** can now begin. Column address (COL) **380** is set to first window first column, as shown by **570**. Signal CONVST **410** is then asserted at **572**. This causes ADC **406** to begin conversion. ASIC **414** provides a sequence of clock pulses on ADCLK **412** and receives the digitized illumination value serially on ADDATA **408**. ASIC **414** immediately shifts the data to processor **66** over MOSI **420** as shown by **574**. In the example shown in FIG. **19**, each subwindow contains only four columns. The addresses for first subwindow second column **576**, third column **578**, and fourth column **580** are successively used as column address **380** and the conversion process is repeated.

Row address **344** can then be set to second subwindow first row **554** and the sequence of assertions for signals RR **360**, SHR **368**, PG **354**, and SHS **374** repeated to load column readout circuits **342** with reset and illumination potentials. Column address **380** can be set to second subwindow first column **382** and the conversion sequence can be repeated.

Note that, since the conversion process uses reset and illumination potentials stored in readout circuits **342** and column address **380** but not row address **344** and that row reset requires row address **344** but not column address **380** or readout circuits **342**, row reset may be interleaved with the conversion process. This is seen in FIG. **19** where, following assertion of SHS signal **374** at **568**, row address **344** is set to the first subwindow n^{th} row address **584** and signals RR **360** and PG **354** ate asserted at **586** to reset all pixels **240** in first subwindow n^{th} row **584**.

Referring now to FIG. **20**, an ambient light sensor that may be used to implement the present invention is shown. The ambient light sensor may be incorporated into imaging system **42**. The ambient light sensor is described more fully in U.S. Pat. No. 6,130,421 entitled "Imaging System For Vehicle Headlamp Control" to J. Bechtel, J. Stam, and J. Roberts, which is hereby incorporated by reference.

Ambient light lens system **54** includes baffle **600** built onto the front of housing **280**. Baffle **600** is angled at an angle θ e of approximately 45° with the horizontal of controlled vehicle **20**. Baffle **600** defines aperture **602** opening towards the front of controlled vehicle **20**. Aperture **602** may be trapezoidal such that the projection of aperture **602** onto a vertical surface would form a rectangle on the vertical surface. Lens **604** is mounted in one side of aperture **602**. The width of lens **604** is approximately the same as the diameter of red lens **286** or cyan lens **288**. Lens **604** accepts light rays over a wide elevational range, such as vertical ray **606** and horizontal ray **608**, and directs these rays into an approximately horizontal direction. Lens **604** is positioned so that a blurred, inverted image of lens **604** is projected by red lens **286** onto one edge of image array sensor **52** between top border **302** and border **316** to form red sky image **610**. Lens **604** is also positioned so that a blurred, inverted image of lens **604** is projected by cyan lens **288** between bottom border **304** and border **320** to form cyan sky image **612**. The active length of lens **604** is made short enough to permit the entire active length to be projected onto red sky image **610** and cyan sky image **612**.

Red sky image **610** and cyan sky image **612** are examined in processor **66** to determine an ambient light level. The intensity values may be averaged to determine ambient light levels. Lens **604** may be designed so that light **56** from different ranges of elevational angles appears in different regions of lens **604**. In this case, light levels from different ranges of elevational angles may be weighted higher than from other ranges of elevation angles when an average is determined. For example, near vertical light may be weighted highest and near horizontal light may be weighted lowest. Also, since red sky image **610** and cyan sky image **612** are correlated, intensities as a function of color may be obtained. For example, the effective ambient light level may be increased for a blue sky as compared with a cloudy sky.

Referring now to FIG. **21**, a diagram illustrating mounting of a moisture sensor that may be used to implement the present invention is shown. Moisture sensor **74**, as well as imaging system **42**, may be constructed into mounting bracket **620** of interior rearview mirror **622**. Moisture sensor **74** may be mounted two to three inches behind windshield **624** of controlled vehicle **20**.

Referring now to FIG. **22**, a diagram illustrating operation of a moisture sensor that may be used to implement the present invention is shown. Moisture sensor **74** and associated control system are described in U.S. Pat. No. 5,923,027 entitled "Moisture Sensor And Windshield Fog Detector" by J. Stam, J. Bechtel, and J. Roberts, which is hereby incorporated by reference.

Moisture sensor **74** includes image array sensor **630**, lens **632**, and light source **634**. Lens **632** is designed to focus windshield **624** onto image array sensor **630**. Moisture sensor **74** operates in two modes, one for detecting droplets on windshield **624** and one for detecting fog on windshield

624. The first mode uses the focusing effect of a droplet of water. When windshield **624** is dry, the scene appearing on image array sensor **630** will be blurred since the scene has an effective focal length of infinity and lens **632** is focused on windshield **624**. If droplets of water due to precipitation such as rain or snow are present on windshield **624**, portions of the scene viewed by image array sensor **630** will be more sharply focused. Since an unfocused scene has less high frequency spatial components than a sharply focused scene, examining the output of image array sensor **630** for high spatial frequency components will provide an indication of droplets on windshield **624**. In the second operating mode, light source **634** shines a beam of light, shown generally by **636**, onto windshield **624**. If no fog is present on windshield **624**, beam **636** will pass through windshield **624** and will not be seen by image array sensor **630**. If fog is present on the interior of window **624**, beam **636** will be reflected as interior light spot **638** which will be detected by image array sensor **630**. Likewise, if fog is on the exterior but not the interior of window **624**, beam **636** will be reflected as exterior light spot **640** which will be seen by image array sensor **630**. If light spot **638**,**640** is seen by image array **630**, the relative height of light spot **638**,**640** in the image can be used to determine whether the fog is on the interior or exterior of windshield **624**.

Image array sensor **630** may be similar in construction to image array sensor **52**. However, the number of pixels required for image array sensor **630** is significantly less than for image array sensor **52**. A 64×64 array of pixels is considered to be appropriate for image array sensor **630**. The angle of windshield **624** in current passenger cars is about 27°. Such a configuration may cause raindrops and other moisture to be at different distances from the image sensor depending on where the moisture is on windshield **624**. To help compensate for this problem, the top of image array sensor **630** may be angled approximately 10° toward windshield **624**.

In a preferred embodiment, lens **632** is a single biconvex lens having a 6 mm diameter, front and rear radius of curvature of 7 mm for each surface, and a center thickness of 2.5 mm. The front surface of lens **632** may be positioned 62 mm from the outer surface of windshield **624**. Mounting bracket **620** may form a stop of about 5 mm directly in front of lens **632**. Image array sensor **630** may be located about 8.55 mm from the rear surface of lens **632**.

Light source **634** is preferably a light emitting diode (LED). Light source **634** either emits highly collimated light or, as in the embodiment shown in FIG. **22**, lens **642** is used to focus the light from light source **634** onto windshield **624**. Light source **634** may emit visible light or, preferably, infrared light so as not to create a distraction for the driver of the controlled vehicle **20**. Light source **634** may be positioned a few millimeters above lens **632** and angled so that beam **636** strikes windshield **624** in an area imaged by image array sensor **630**.

The output from image array sensor **630** must be processed in a manner similar to the output of image array sensor **52**. A separate image array control and ADC, similar to control and ADC **64**, and processor, similar to processor **66**, may be provided for this purpose. Alternately, a separate imaging array control and ADC may be used with processor **66**. A further embodiment is to use the same control unit **44** for the output of both image array sensor **52** and moisture sensor **74**. Processor **66** would control which image array sensor **52**,**630** was being examined.

While the best modes for carrying out the invention have been described in detail, other possibilities exist within the spirit and scope of the present invention. Those familiar with the art to which this invention relates will recognize various alternative designs and embodiments for practicing the invention as defined by the following claims.

What is claimed is:

1. A method for controlling continuously variable headlamps comprising:

detecting the ambient light level;

enabling continuously variable headlamp operation if the ambient light level is below a threshold level;

obtaining an image in front of the continuously variable headlamps, the image covering an area including points at which the driver in a vehicle in front of the continuously variable headlamps would perceive the variable headlamps as causing excessive glare if the continuously variable headlamps are operating above a low beam illumination level; and

controlling the continuously variable headlamps to produce a light level responsive to the obtained image when variable headlamp operation is enabled.

2. The method of claim **1**, wherein the step of controlling includes gradually decreasing the light level produced by the headlamps at a predetermined rate after a vehicle is detected.

3. The method of claim **2**, wherein the step of controlling includes increasing headlamp light level if another vehicle is not detected.

4. The method of claim **1**, wherein the step of controlling includes altering the light level produced by the headlamps as a function of a detected vehicle parameter associated with a vehicle detected in the obtained image.

5. The method of claim **4**, wherein the step of controlling includes altering the light level produced by the headlamps as a function of ambient light level.

6. The method of claim **4**, wherein the detected vehicle parameter is an estimated distance to the detected vehicle and the step of controlling includes altering the light level produced by the headlamps as a function of the estimated distance to the detected vehicle.

7. The method of claim **4**, wherein the detected vehicle parameter is the brightness of the lights of the detected vehicle and the step of controlling includes altering the light level produced by the headlamps as a function of the brightness of the lights from the detected vehicle.

8. The method of claim **1**, wherein the step of controlling includes steering the headlamps.

9. The method of claim **1**, wherein the step of controlling includes changing the amount of light output by a light source in the headlamp.

10. The method of claim **1**, wherein the step of controlling includes altering the vertical aim of the headlamps.

11. A headlamp control system comprising:

at least one headlamp circuit having an input for receipt of a headlamp signal, said headlamp circuit providing illumination at a selected illumination level corresponding to a headlamp signal;

an image sensor to detect lights from a vehicle; and

a control circuit coupled to said at least one headlamp circuit and said image sensor, said control circuit being operable to detect a vehicle from information obtained from said image sensor, to detect a vehicle parameter associated with a detected vehicle, and to generate a headlamp signal to cause said at least one headlamp circuit to provide illumination at a selected illumination level within a continuously variable headlamp illumination range, whereby the headlamp signal is derived as a function of the vehicle parameter detected by the

image sensor, wherein said vehicle parameter is any one or a combination of: lateral position of the detected vehicle, horizontal position of the detected vehicle, estimated distance of the detected vehicle, and relative direction of movement of the detected vehicle.

12. The headlamp control system of claim **11**, wherein said control circuit gradually decreases the light level produced by said at least one headlamp circuit at a predetermined rate after a vehicle is detected.

13. The headlamp control system of claim **12**, wherein said control circuit increases the light level produced by said at least one headlamp circuit if another vehicle is not detected.

14. The headlamp control system of claim **11**, wherein said control circuit alters the light level produced by said at least one headlamp circuit as a function of the detected vehicle parameter.

15. The headlamp control system of claim **14**, wherein said control circuit alters the light level produced by said at least one headlamp circuit as a function of ambient light level.

16. The headlamp control system of claim **14**, wherein the vehicle parameter detected by said control circuit is an estimated distance to the detected vehicle and said control circuit alters the light level produced by said at least one headlamp circuit as a function of the estimated distance to the detected vehicle.

17. The headlamp control system of claim **14**, wherein an additional vehicle parameter detected by said control circuit is the brightness of the lights of the detected vehicle and said control circuit alters the light level produced by said at least one headlamp circuit as a function of the brightness of the lights of the detected vehicle.

18. The headlamp control system of claim **11**, wherein said at least one headlamp circuit includes two headlamps and wherein said control circuit steers said headlamps.

19. The headlamp control system of claim **18**, wherein said control circuit alters the vertical aim of said headlamps.

20. The headlamp control system of claim **11**, wherein said control circuit changes the amount of light output by a light source in said at least one headlamp circuit.

21. An illumination control system for controlling exterior illumination lights of a controlled vehicle where the exterior lights are capable of producing at least three illumination patterns including at least a low beam illumination pattern and two additional illumination patterns of higher intensity than the low beam pattern, said control system comprising:

an imaging system capable of determining lateral and elevational locations of headlamps from oncoming vehicles and tail lamps from leading vehicles; and

a control circuit in communication with the imaging system and operable to:

(a) acquire an image from said imaging system, the image covering a glare area including points at which a driver of a vehicle in front of the controlled vehicle would perceive the exterior lights as causing excessive glare;

(b) process the image to determine if at least one vehicle in front of the controlled vehicle is within the glare area; and

(c) if at least one vehicle in front of the controlled vehicle is within the glare area, change the illumination pattern of the exterior lights to a selected one of the at least three illumination patterns to thereby alter the glare area such that the at least one vehicle is no longer in the glare area.

22. The headlamp control system of claim **21**, wherein the exterior lights include two headlamps and wherein said control circuit steers at least one of the headlamps to obtain the selected one of the at least three illumination patterns.

23. The headlamp control system of claim **22**, wherein said control circuit alters the vertical aim of at least one of the headlamps to obtain the selected one of the at least three illumination patterns.

24. The headlamp control system of claim **22**, wherein said control circuit additionally changes the amount of light output by a light source in the headlamps to obtain the selected one of the at least three illumination patterns.

25. The headlamp control system of claim **21**, wherein said control circuit changes the amount of light output by a light source in the exterior lights to obtain the selected one of the at least three illumination patterns.

26. The headlamp control system of claim **21**, wherein each of said at least three illumination patterns provides a different illumination range.

27. The headlamp control system of claim **21**, wherein the exterior lights produce continuously variable illumination patterns, and wherein said control circuit varies the illumination pattern of the exterior lights through the continuum of illumination patterns in response to lights detected in the images obtained from said imaging system.

28. The headlamp control system of claim **21**, wherein the exterior lights provide continuously variable light output levels, and wherein said control circuit varies the light output levels of the exterior lights through the continuum of light output levels in response to lights detected in the images obtained from said imaging system.

29. An illumination control system for controlling exterior illumination lights of a vehicle where the exterior lights are capable of producing at least three illumination patterns including at least a low beam illumination pattern and two additional illumination patterns of higher intensity than the low beam pattern, said control system comprising:

an image sensor for sensing an image forward of the vehicle; and

a control circuit coupled to said image sensor for identifying vehicle lights in the image obtained by said image sensor, and for controlling the exterior lights to produce a selected one of the at least three illumination patterns in response to the identification or non-identification of vehicle lights in the image sensed by said image sensor, wherein said control circuit gradually decreases the illumination level produced by the exterior lights at a predetermined rate after vehicle lights are detected.

* * * * *

Exhibit PA-D

U.S. Patent No. 6,587,573

Stam et al.

US006587573B1

(12) **United States Patent**
Stam et al.

(10) **Patent No.: US 6,587,573 B1**
(45) **Date of Patent: Jul. 1, 2003**

(54) **SYSTEM FOR CONTROLLING EXTERIOR VEHICLE LIGHTS**

(75) Inventors: **Joseph S. Stam**, Holland, MI (US); **Jon H. Bechtel**, Holland, MI (US); **Spencer D. Reese**, Fort Wayne, IN (US); **John K. Roberts**, East Grand Rapids, MI (US); **William L. Tonar**, Holland, MI (US); **G. Bruce Poe**, Hamilton, MI (US); **Douglas J. Newhouse**, Zeeland, MI (US)

(73) Assignee: **Gentex Corporation**, Zeeland, MI (US)

(*) Notice: Subject to any disclaimer, the term of this patent is extended or adjusted under 35 U.S.C. 154(b) by 0 days.

(21) Appl. No.: **09/800,460**

(22) Filed: **Mar. 5, 2001**

Related U.S. Application Data

(63) Continuation-in-part of application No. 09/528,389, filed on Mar. 20, 2000.

(51) **Int. Cl.**[7] **G06K 9/00**
(52) **U.S. Cl.** **382/104**; 340/930; 340/933
(58) **Field of Search** 382/104; 250/208, 250/214, 226, 573, 574; 315/82; 359/604, 264, 267; 340/930, 933

(56) **References Cited**

U.S. PATENT DOCUMENTS

2,632,040	A	3/1953	Rabinow
2,827,594	A	3/1958	Rabinow
4,139,801	A	2/1979	Linares
4,236,099	A	11/1980	Rosenblum
4,357,558	A	11/1982	Massoni et al.
4,376,909	A	3/1983	Tagami et al.
4,599,544	A	7/1986	Martin
4,665,321	A	5/1987	Chang et al.
4,692,798	A	9/1987	Seko et al.
4,727,290	A	2/1988	Smith et al.
4,768,135	A	8/1988	Kretschmer et al.
4,862,037	A	8/1989	Farber et al.
4,891,559	A	1/1990	Matsumoto et al.
4,930,742	A	6/1990	Schofield et al.
4,967,319	A	10/1990	Seko
5,036,437	A	7/1991	Macks
5,072,154	A	12/1991	Chen

(List continued on next page.)

FOREIGN PATENT DOCUMENTS

DE	2946561	5/1981
FR	2641237	7/1990
FR	2726144	4/1996
JP	8-166221	6/1996
WO	8605147	9/1986
WO	9735743	10/1997
WO	9843850	10/1998
WO	9947396	9/1999
WO	0022881	4/2000

(List continued on next page.)

OTHER PUBLICATIONS

Christopher M. Kormanyos, SAE Paper No. 980003, pp. 13–182

(List continued on next page.)

Primary Examiner—Leo Boudreau
Assistant Examiner—Abolfazl Tabatabai
(74) *Attorney, Agent, or Firm*—Price, Heneveld, Cooper, DeWitt & Litton

(57) **ABSTRACT**

A system and method of automatically controlling exterior vehicle lights includes an image sensor and a controller to generate control signals. The control signals are derived based on information obtained from the image sensor as well as other detected parameters pertaining to the detected light source(s), the vehicle having the inventive control system, and the ambient environment. The control circuit may simply turn certain exterior lights on or off, or change the brightness, aim, focus, etc. to produce various beam patterns that maximize the illuminated area in front of the vehicle without causing excessive glare in the eyes of other drivers.

77 Claims, 40 Drawing Sheets

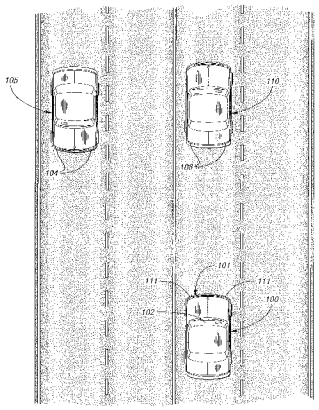

U.S. PATENT DOCUMENTS

5,086,253 A 2/1992 Lawler
5,124,549 A 6/1992 Michaels et al.
5,182,502 A 1/1993 Slotkowski et al.
5,187,383 A 2/1993 Taccetta et al.
5,235,178 A 8/1993 Hegyi
5,329,206 A 7/1994 Slotkowski et al.
5,416,318 A 5/1995 Hegyi
5,426,294 A 6/1995 Kobayashi et al.
5,434,407 A 7/1995 Bauer et al.
5,451,822 A 9/1995 Bechtel et al.
5,471,515 A 11/1995 Fossum et al.
5,508,592 A 4/1996 Lapatovich et al.
5,537,003 A * 7/1996 Bechtel et al. 315/82
5,550,677 A 8/1996 Schofield et al.
5,614,788 A 3/1997 Mullins et al.
5,660,454 A 8/1997 Mori et al.
5,666,028 A 9/1997 Bechtel et al.
5,715,093 A 2/1998 Schierbeek et al.
5,796,094 A 8/1998 Schofield et al.
5,811,888 A 9/1998 Hsieh
5,812,321 A 9/1998 Schierbeek et al.
5,835,613 A * 11/1998 Breed et al. 382/100
5,837,994 A 11/1998 Stam et al.
5,841,126 A 11/1998 Fossum et al.
5,877,897 A * 3/1999 Schofield et al. 359/604
5,912,534 A 6/1999 Benedict
5,923,027 A * 7/1999 Stam et al. 250/208.1
5,942,853 A 8/1999 Piscart
5,990,469 A 11/1999 Bechtel et al.
6,008,486 A 12/1999 Stam et al.
6,049,171 A * 4/2000 Stam et al. 315/82
6,097,023 A 8/2000 Schofield et al.
6,130,421 A 10/2000 Bechtel et al.
6,144,158 A 11/2000 Beam
6,166,698 A * 12/2000 Turnbull et al. 343/713
6,329,925 B1 * 12/2001 Skiver et al. 380/815.4

OTHER PUBLICATIONS

Franz–Josef Kalze, SAE Paper No. 980005, pp. 23–26.
J.P. Löwenau et al., SAE Paper No. 980007, pp. 33–38.
Tohru Shimizu et al., SAE Paper No. 980322, pp. 113–117.

* cited by examiner

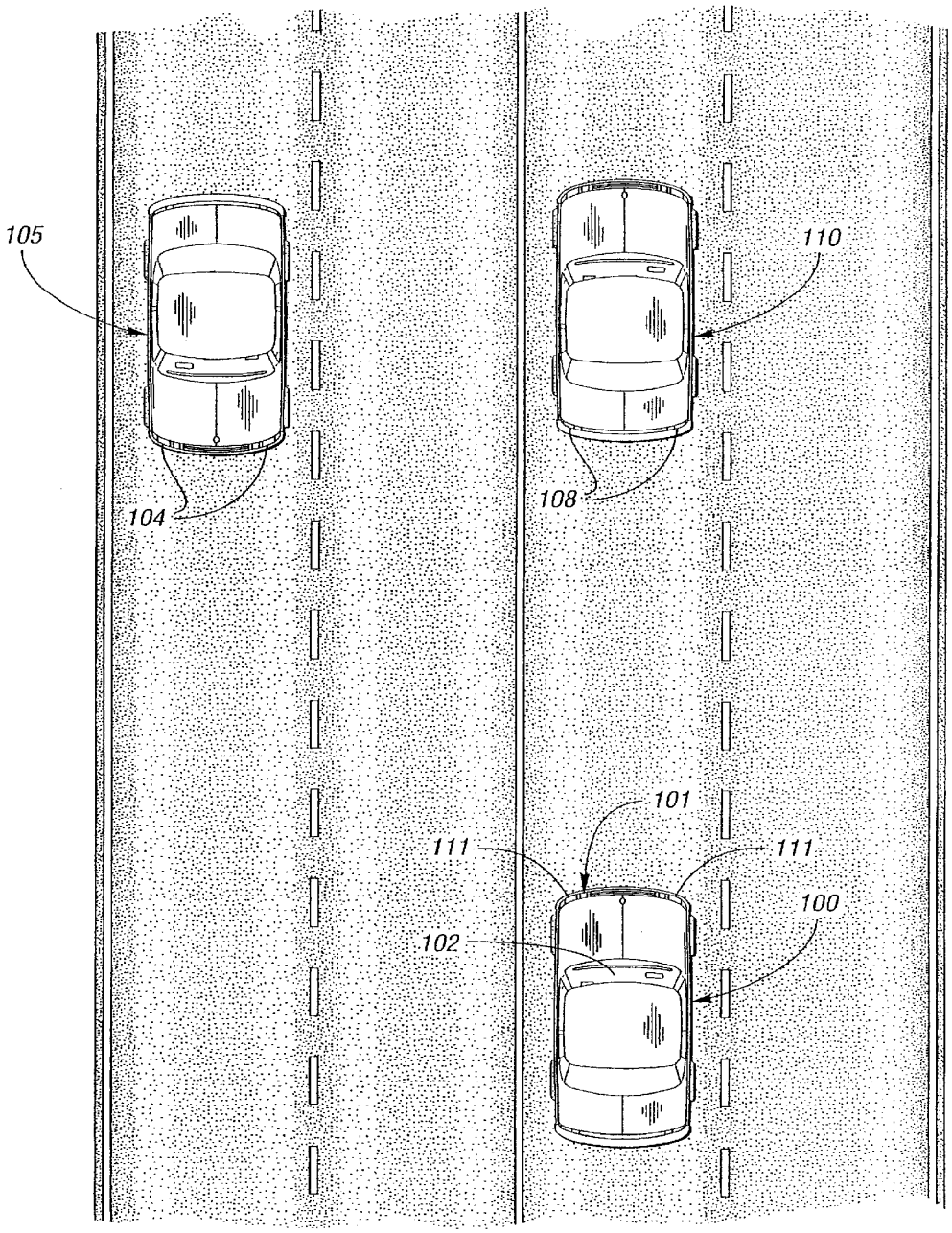

Fig. 1

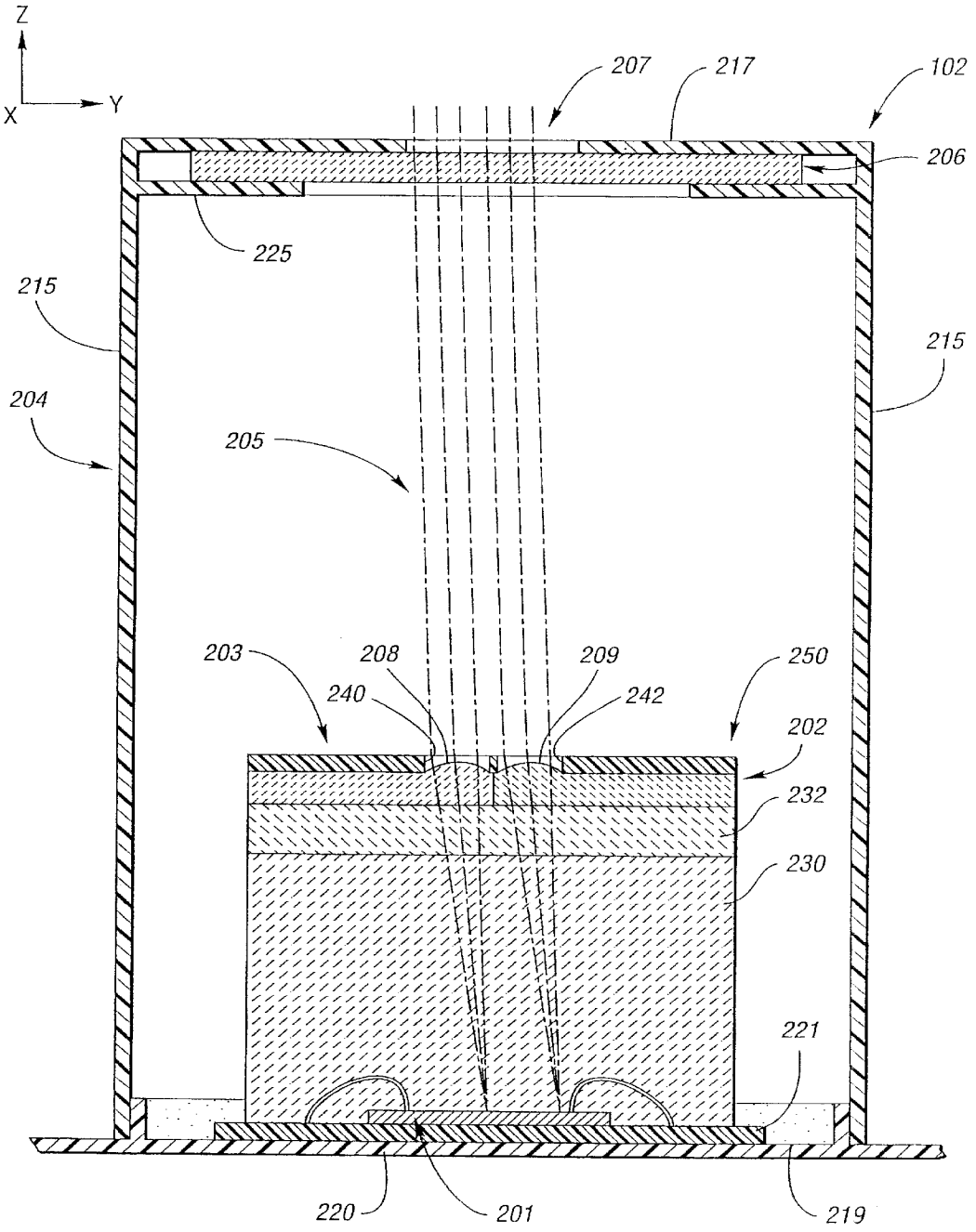
Z
X
Y
207
217
102
206
225
215
215
204
205
203
208
209
250
240
242
202
232
230
221
220
201
219

Fig. 2a

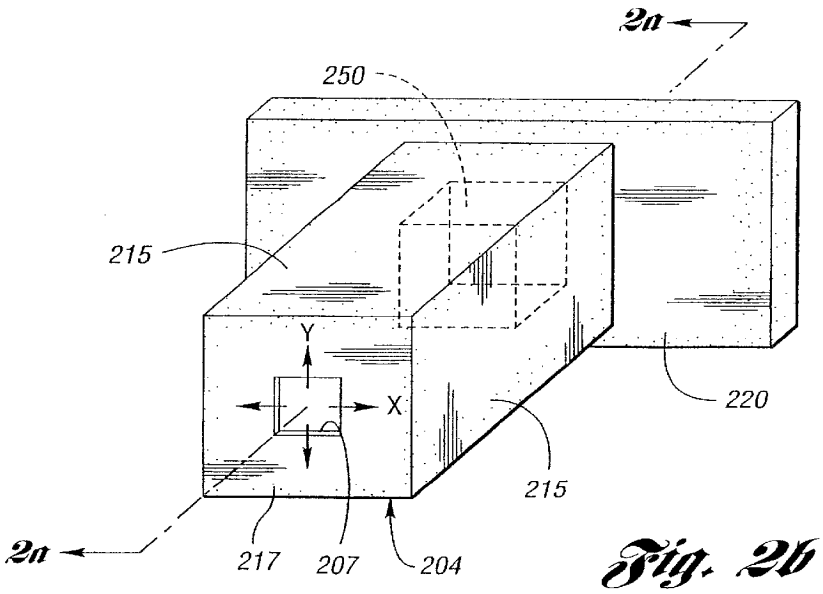
2a
250
215
Y
X
220
215
2a
217
207
204

Fig. 2b

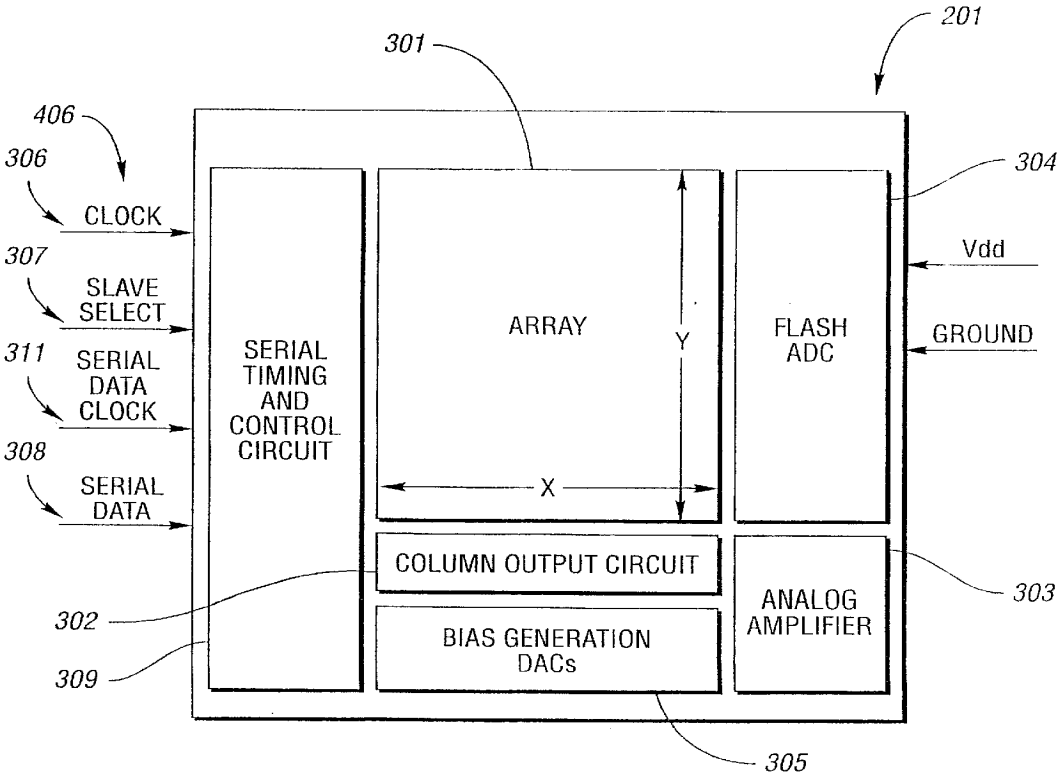
201
301
406
306
CLOCK
307
SLAVE SELECT
311
SERIAL DATA CLOCK
308
SERIAL DATA
SERIAL TIMING AND CONTROL CIRCUIT
ARRAY
Y
X
FLASH ADC
304
Vdd
GROUND
COLUMN OUTPUT CIRCUIT
BIAS GENERATION DACs
ANALOG AMPLIFIER
303
302
309
305

Fig. 3

Fig. 4

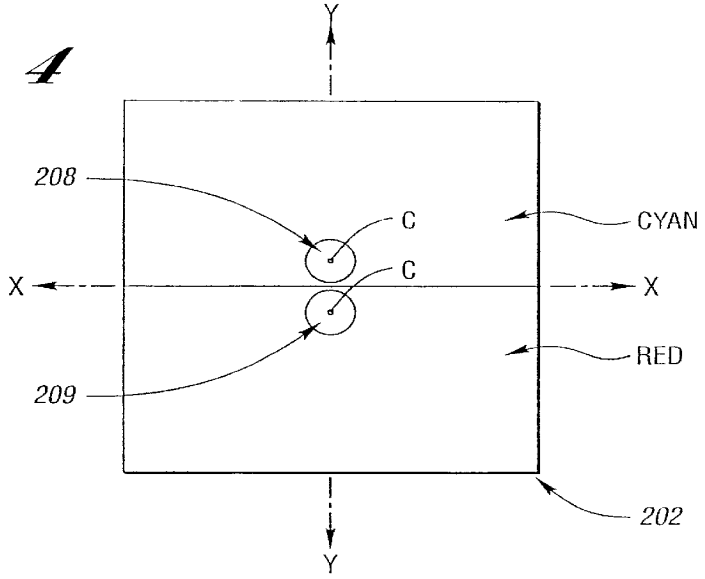

Fig. 5

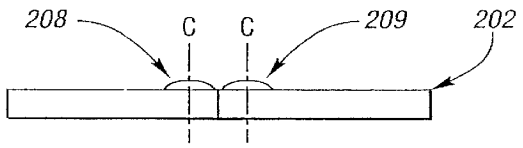

Fig. 6

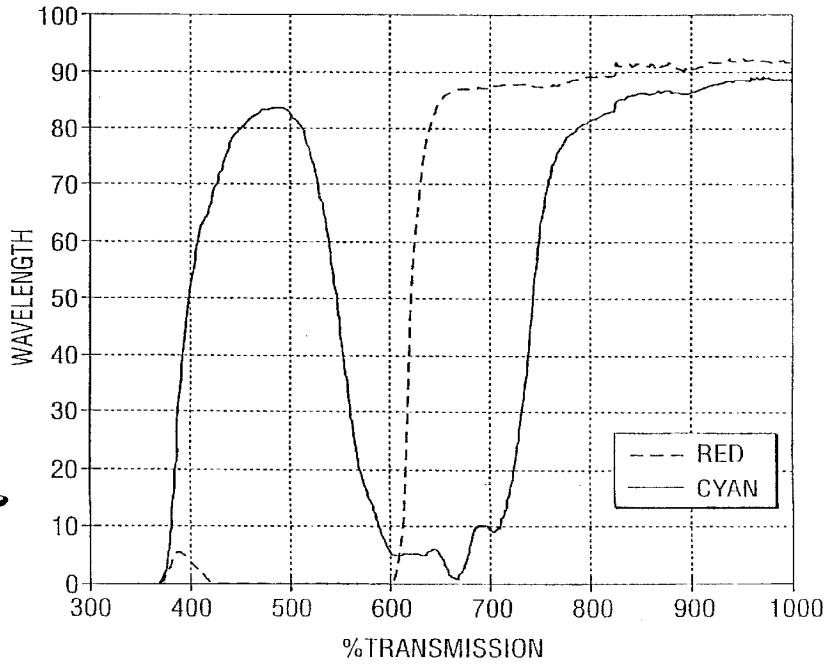

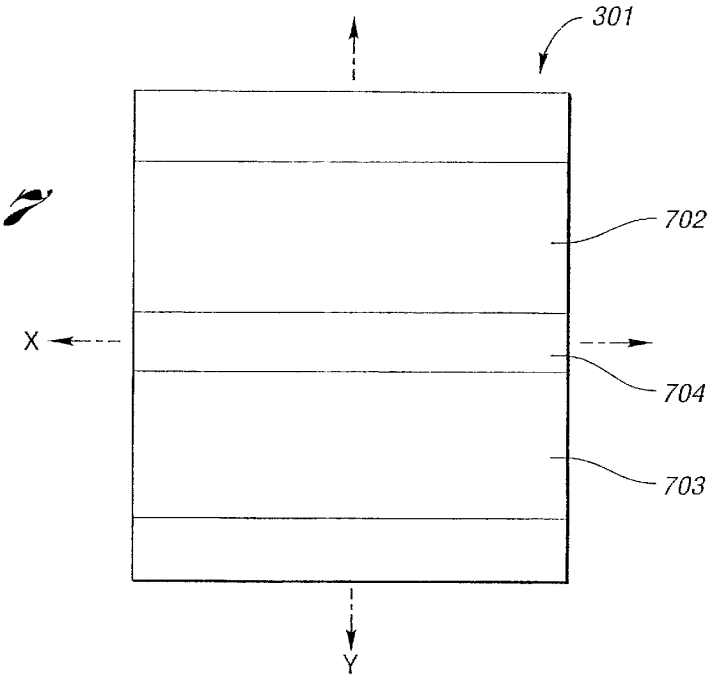
301
702
X
704
703
Y

Fig. 7

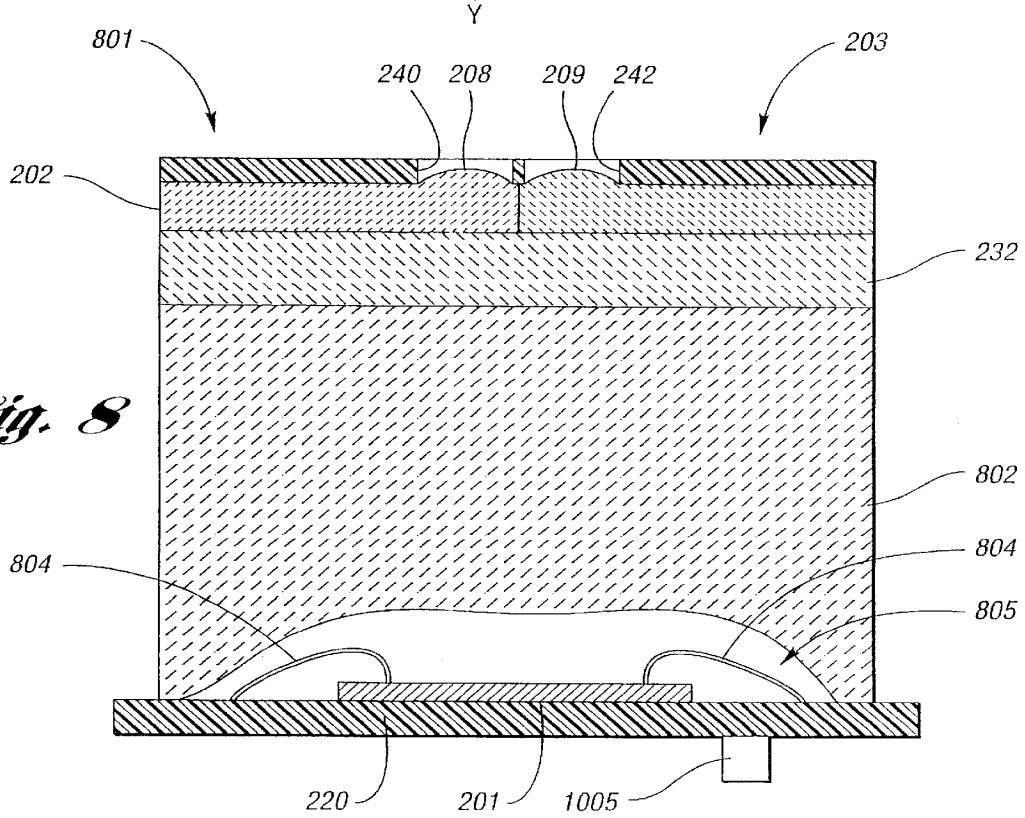
801
240
208
209
242
203
202
232
802
804
804
805
220
201
1005

Fig. 8

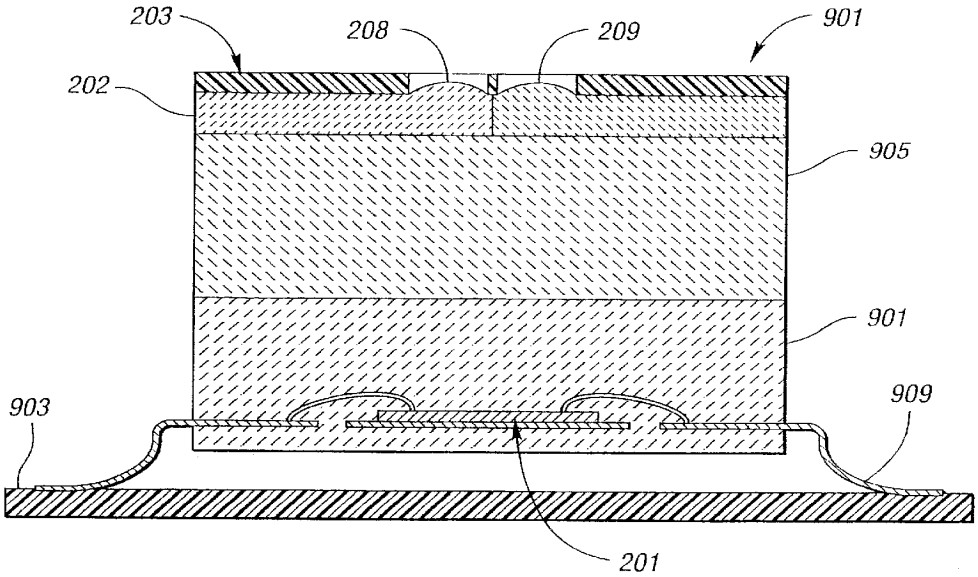
203
208
209
901
202
905
901
903
909
201

Fig. 9

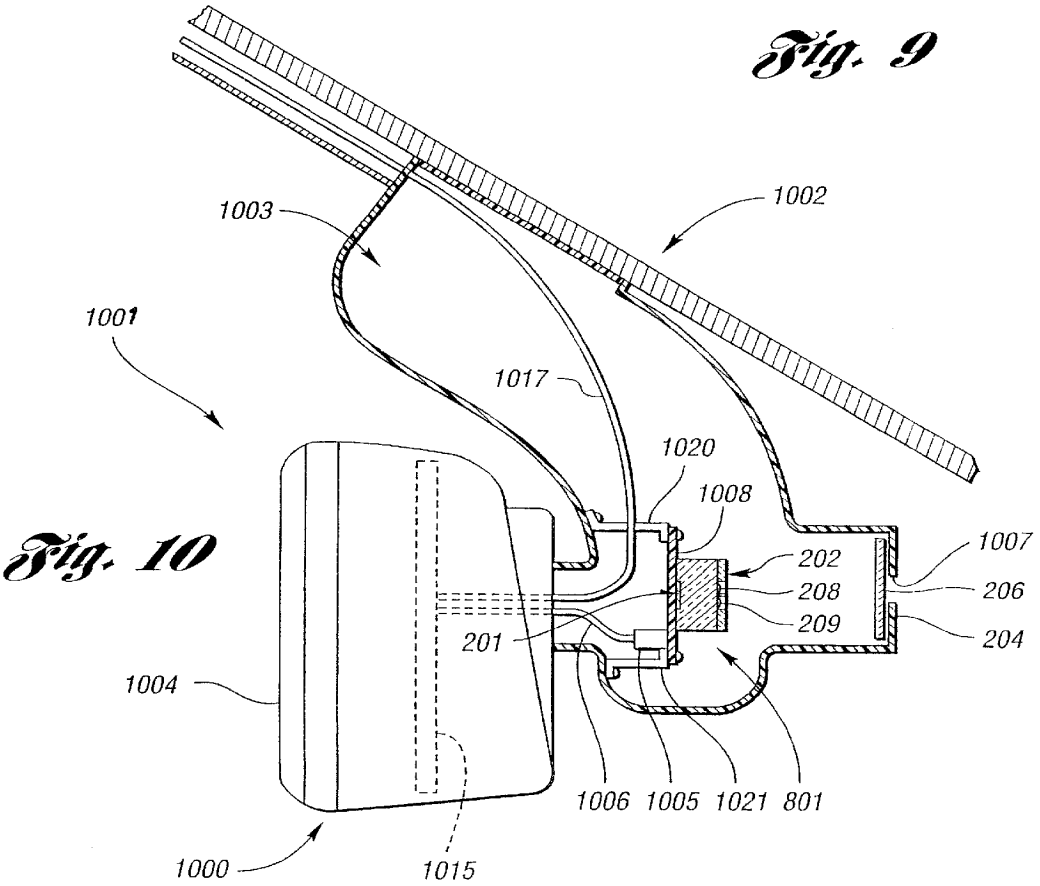
1002
1003
1001
1017
1020
1008
202
208
209
201
1007
206
204
1004
1006
1005
1021
801
1000
1015

Fig. 10

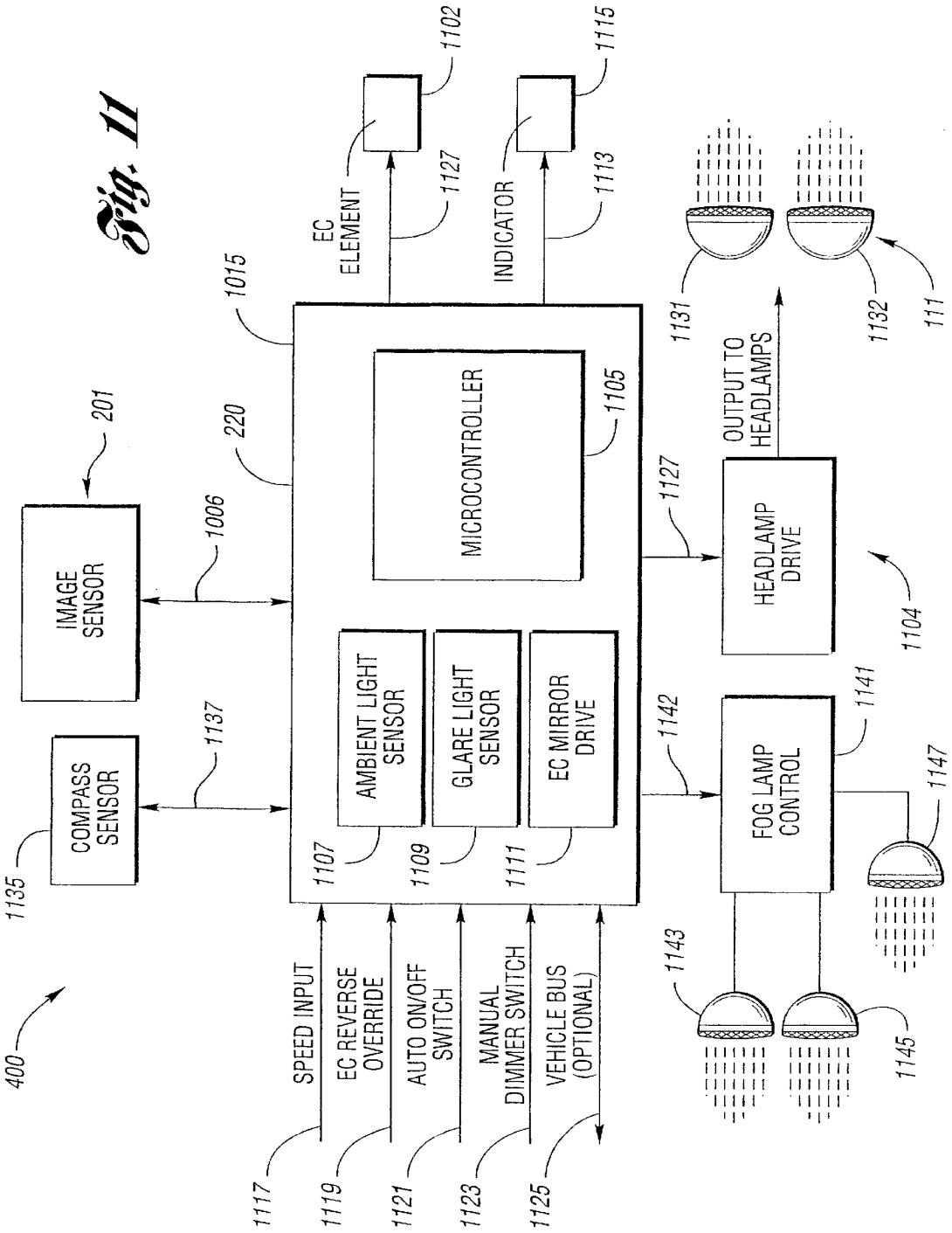
Fig. 11
400
IMAGE SENSOR
201
COMPASS SENSOR
1135
1006
1137
220
1015
MICROCONTROLLER
1105
AMBIENT LIGHT SENSOR
1107
GLARE LIGHT SENSOR
1109
EC MIRROR DRIVE
1111
EC ELEMENT
1102
1127
INDICATOR
1115
1113
SPEED INPUT
1117
EC REVERSE OVERRIDE
1119
AUTO ON/OFF SWITCH
1121
MANUAL DIMMER SWITCH
1123
VEHICLE BUS (OPTIONAL)
1125
1127
HEADLAMP DRIVE
1104
OUTPUT TO HEADLAMPS
1131
1132
111
1142
FOG LAMP CONTROL
1141
1147
1143
1145

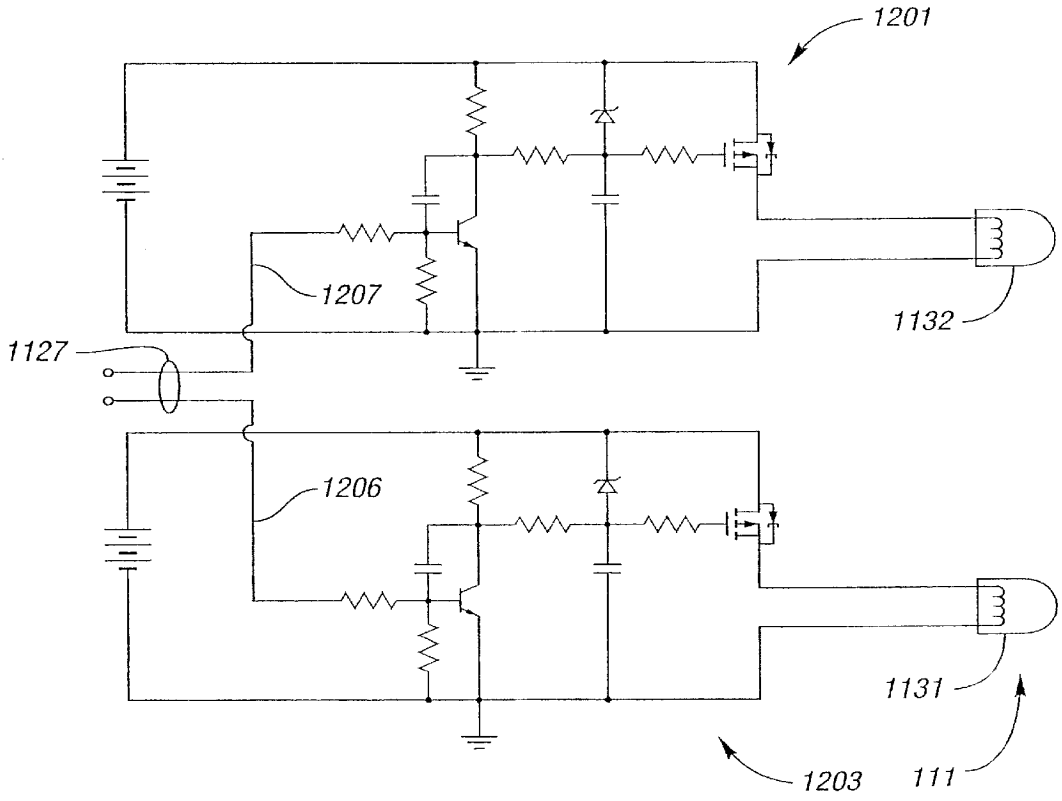

Fig. 12

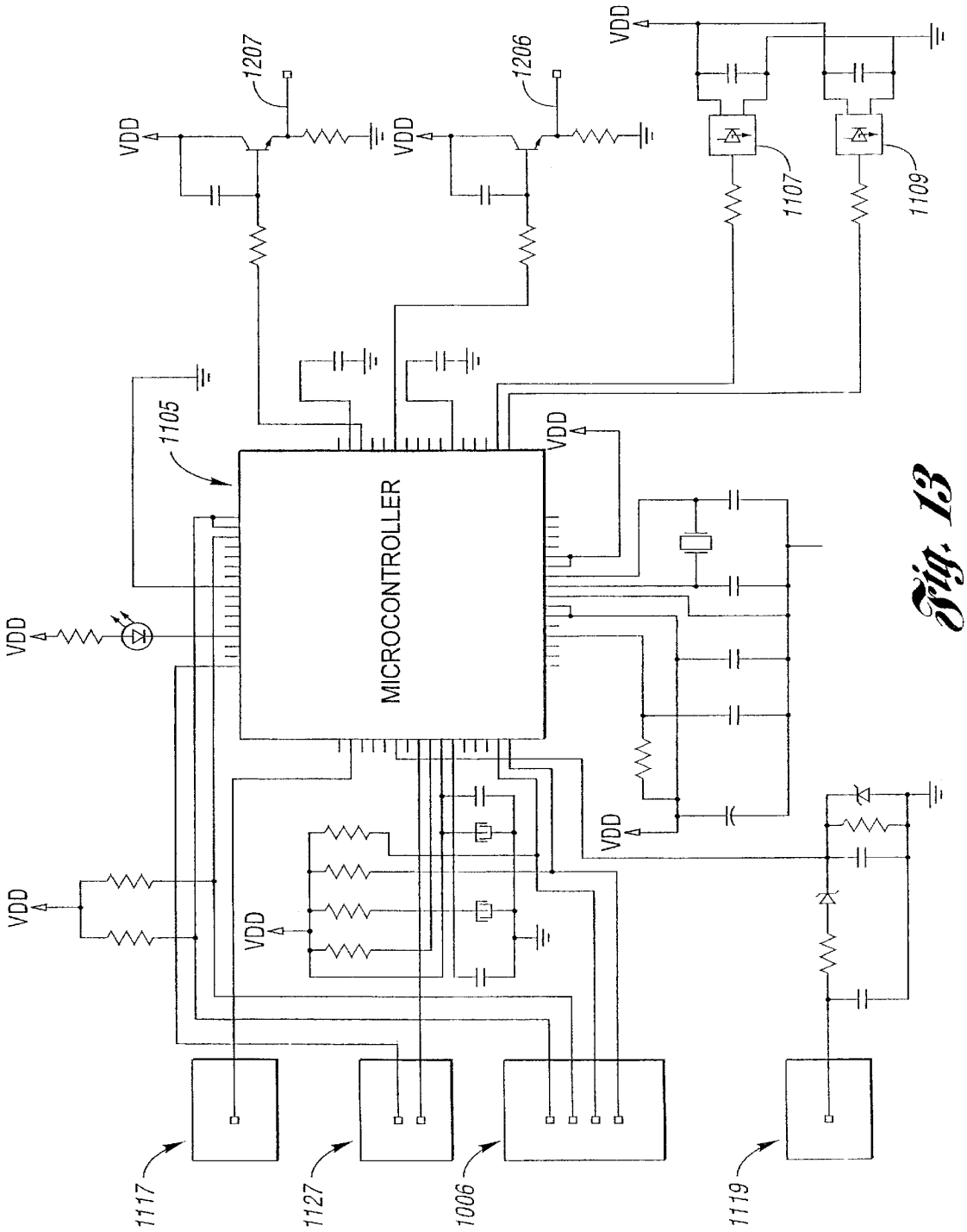
VDD
1207
1206
1107
1109
1105
MICROCONTROLLER
1117
1127
1006
1119

Fig. 13

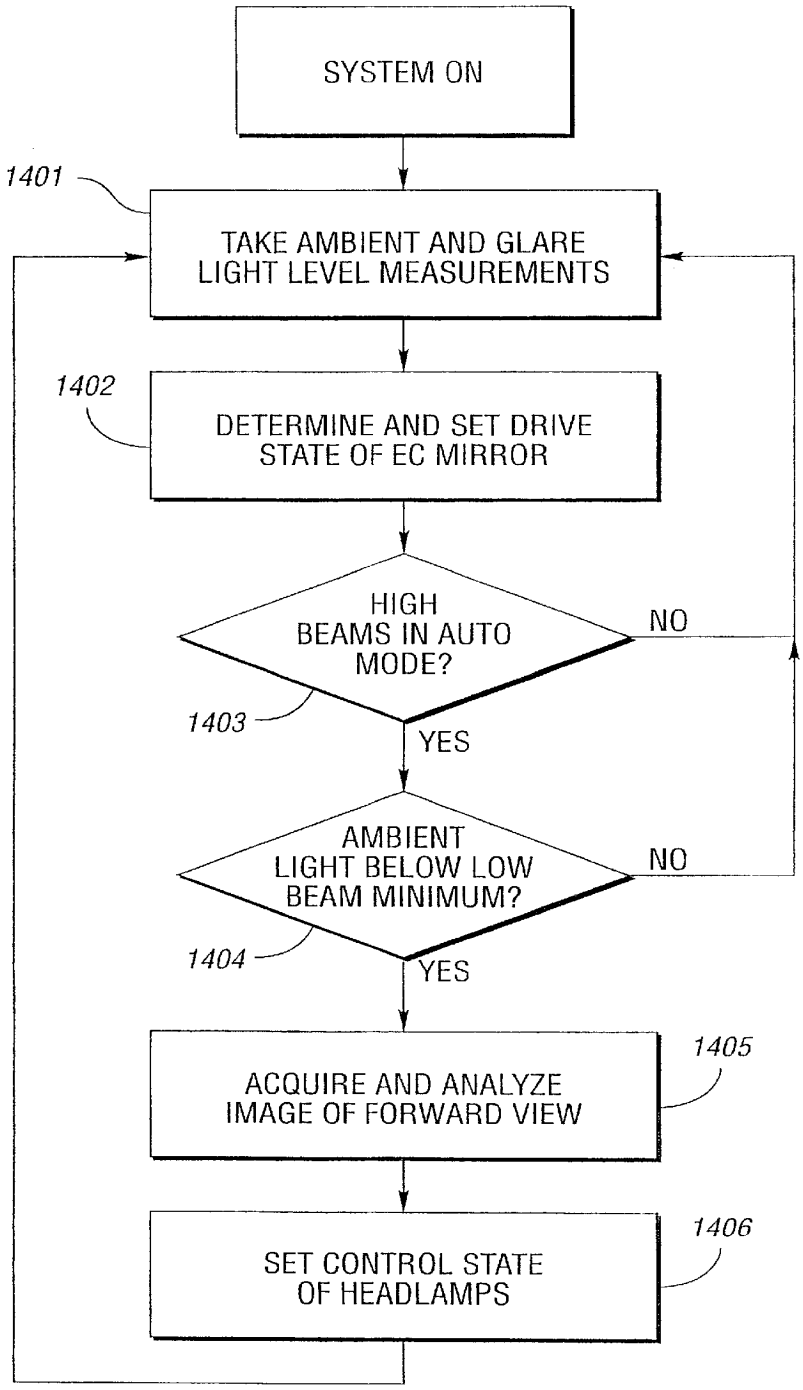
SYSTEM ON
1401
TAKE AMBIENT AND GLARE LIGHT LEVEL MEASUREMENTS
1402
DETERMINE AND SET DRIVE STATE OF EC MIRROR
HIGH BEAMS IN AUTO MODE?
NO
1403
YES
AMBIENT LIGHT BELOW LOW BEAM MINIMUM?
NO
1404
YES
1405
ACQUIRE AND ANALYZE IMAGE OF FORWARD VIEW
1406
SET CONTROL STATE OF HEADLAMPS

Fig. 14

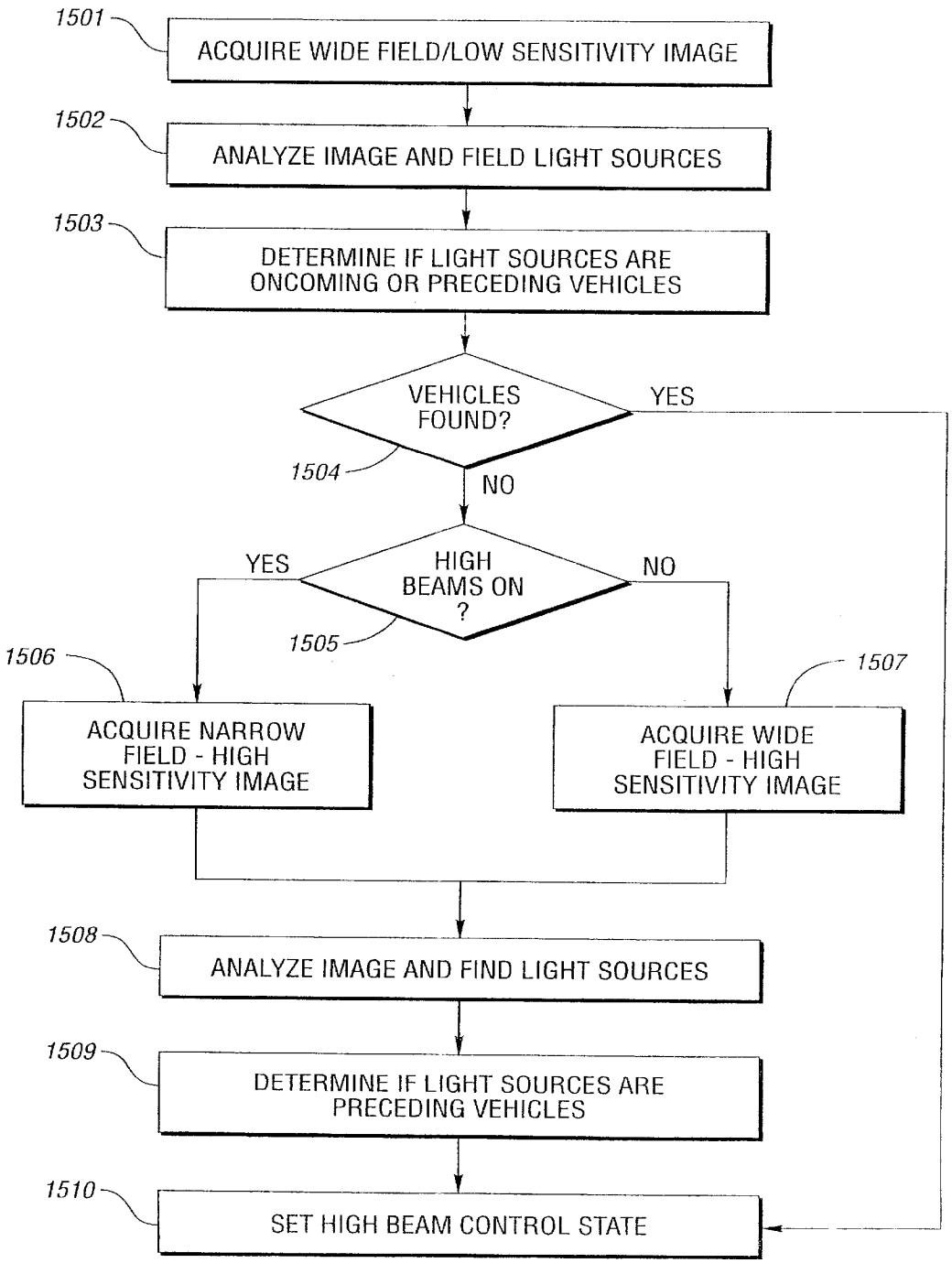
1501
ACQUIRE WIDE FIELD/LOW SENSITIVITY IMAGE
1502
ANALYZE IMAGE AND FIELD LIGHT SOURCES
1503
DETERMINE IF LIGHT SOURCES ARE ONCOMING OR PRECEDING VEHICLES
VEHICLES FOUND?
YES
1504
NO
YES
HIGH BEAMS ON ?
NO
1505
1506
1507
ACQUIRE NARROW FIELD - HIGH SENSITIVITY IMAGE
ACQUIRE WIDE FIELD - HIGH SENSITIVITY IMAGE
1508
ANALYZE IMAGE AND FIND LIGHT SOURCES
1509
DETERMINE IF LIGHT SOURCES ARE PRECEDING VEHICLES
1510
SET HIGH BEAM CONTROL STATE

Fig. 15

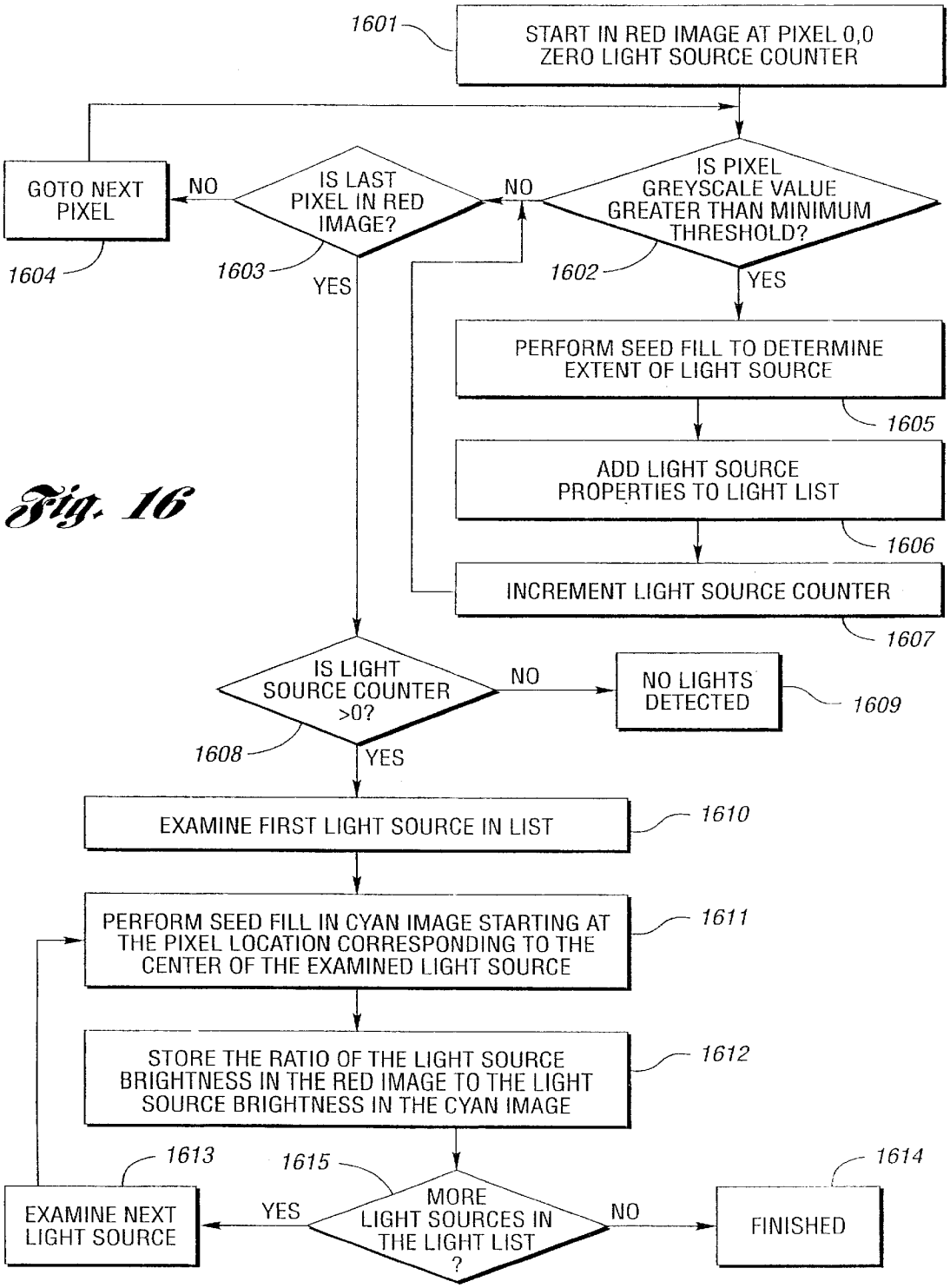
1601
START IN RED IMAGE AT PIXEL 0,0
ZERO LIGHT SOURCE COUNTER
GOTO NEXT PIXEL
NO
IS LAST PIXEL IN RED IMAGE?
NO
IS PIXEL GREYSCALE VALUE GREATER THAN MINIMUM THRESHOLD?
1604
1603
YES
1602
YES
PERFORM SEED FILL TO DETERMINE EXTENT OF LIGHT SOURCE
1605
ADD LIGHT SOURCE PROPERTIES TO LIGHT LIST
1606
INCREMENT LIGHT SOURCE COUNTER
1607
IS LIGHT SOURCE COUNTER >0?
NO
NO LIGHTS DETECTED
1609
1608
YES
EXAMINE FIRST LIGHT SOURCE IN LIST
1610
PERFORM SEED FILL IN CYAN IMAGE STARTING AT THE PIXEL LOCATION CORRESPONDING TO THE CENTER OF THE EXAMINED LIGHT SOURCE
1611
STORE THE RATIO OF THE LIGHT SOURCE BRIGHTNESS IN THE RED IMAGE TO THE LIGHT SOURCE BRIGHTNESS IN THE CYAN IMAGE
1612
1613
1615
1614
EXAMINE NEXT LIGHT SOURCE
YES
MORE LIGHT SOURCES IN THE LIGHT LIST ?
NO
FINISHED

Fig. 16

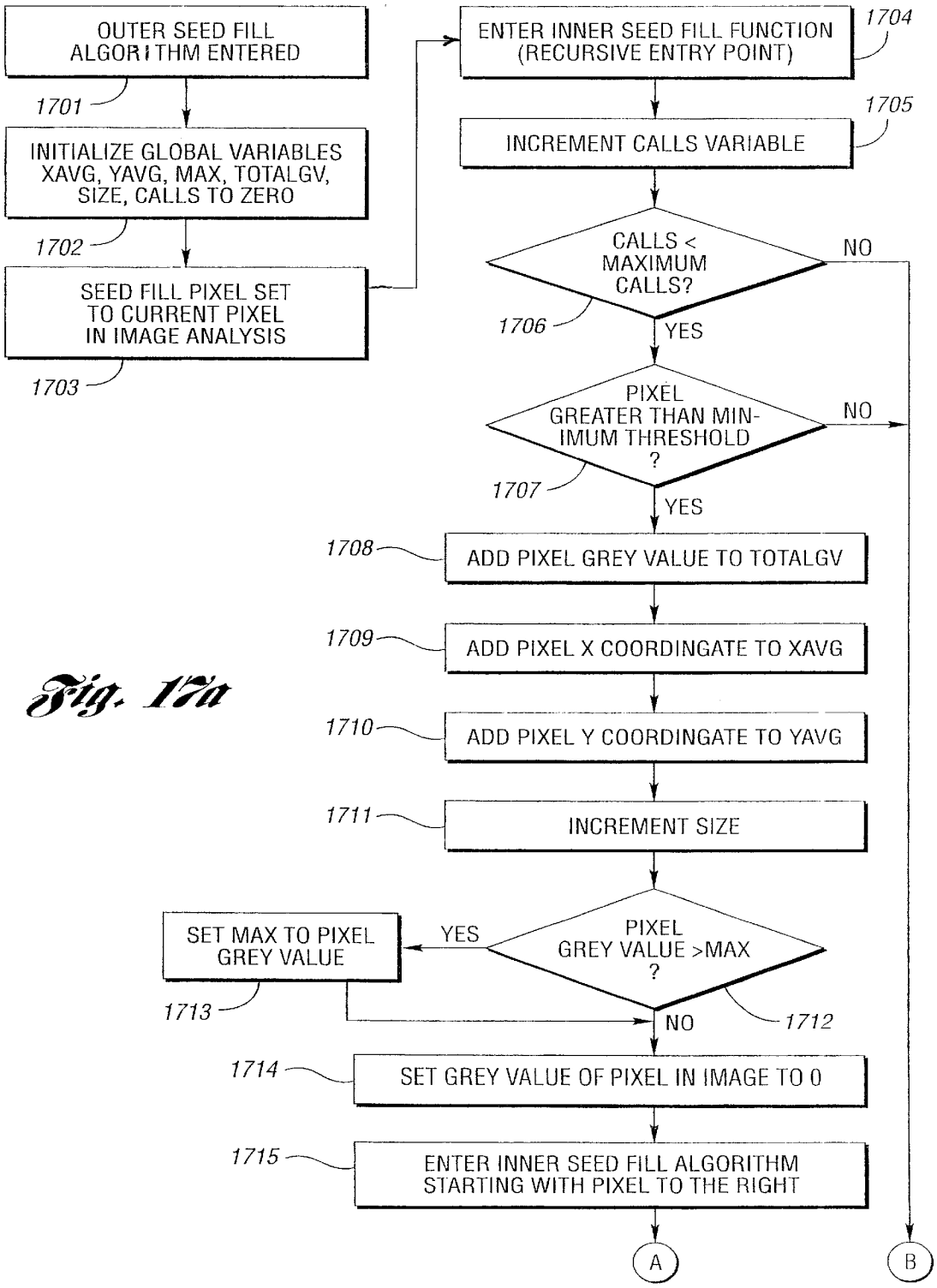
OUTER SEED FILL ALGORITHM ENTERED
1701
INITIALIZE GLOBAL VARIABLES XAVG, YAVG, MAX, TOTALGV, SIZE, CALLS TO ZERO
1702
SEED FILL PIXEL SET TO CURRENT PIXEL IN IMAGE ANALYSIS
1703
ENTER INNER SEED FILL FUNCTION (RECURSIVE ENTRY POINT)
1704
INCREMENT CALLS VARIABLE
1705
CALLS < MAXIMUM CALLS?
1706
NO
YES
PIXEL GREATER THAN MINIMUM THRESHOLD ?
1707
NO
YES
1708
ADD PIXEL GREY VALUE TO TOTALGV
1709
ADD PIXEL X COORDINGATE TO XAVG
1710
ADD PIXEL Y COORDINGATE TO YAVG
1711
INCREMENT SIZE
PIXEL GREY VALUE >MAX ?
YES
SET MAX TO PIXEL GREY VALUE
1713
NO
1712
1714
SET GREY VALUE OF PIXEL IN IMAGE TO 0
1715
ENTER INNER SEED FILL ALGORITHM STARTING WITH PIXEL TO THE RIGHT
A
B

Fig. 17a

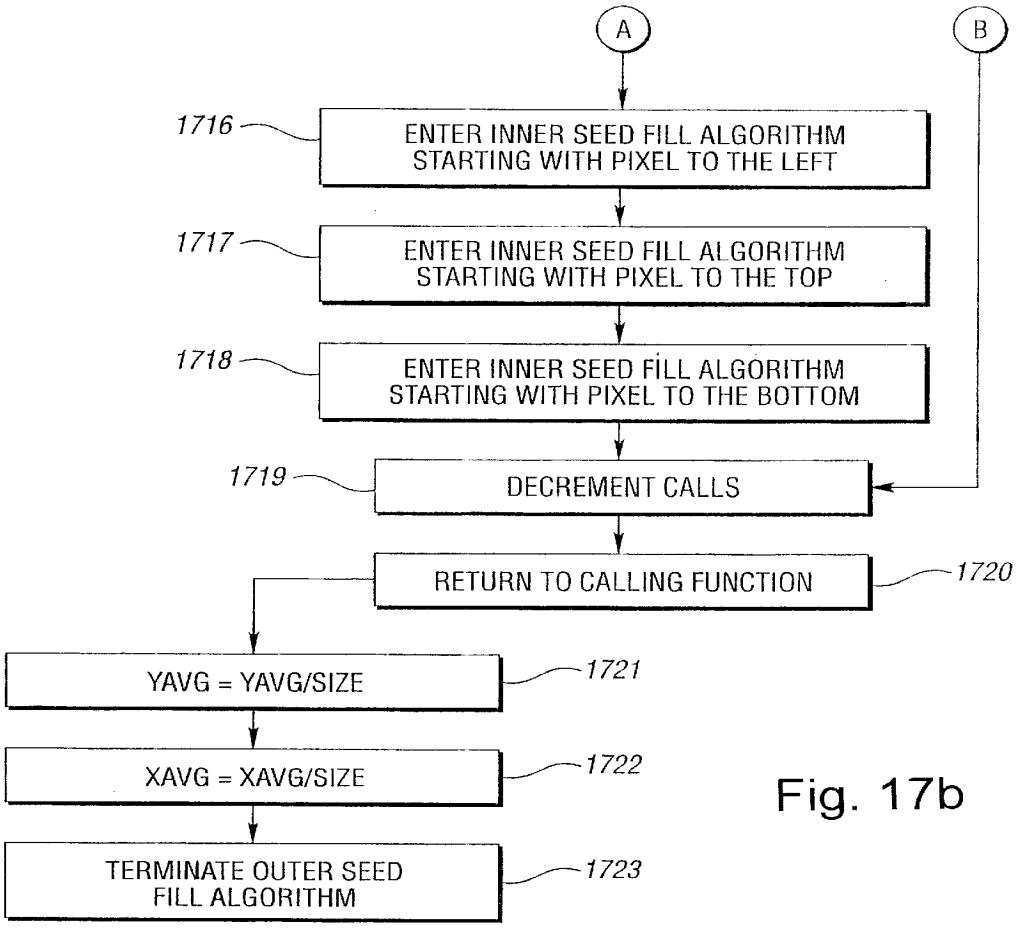

Fig. 17b

Fig. 17c

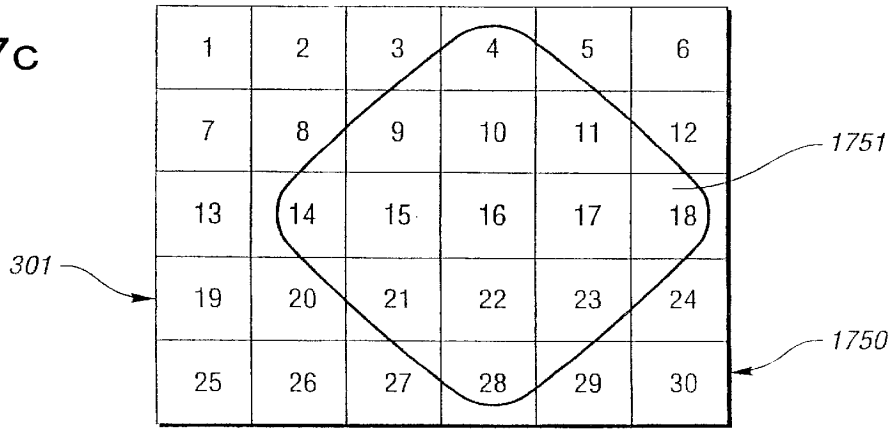

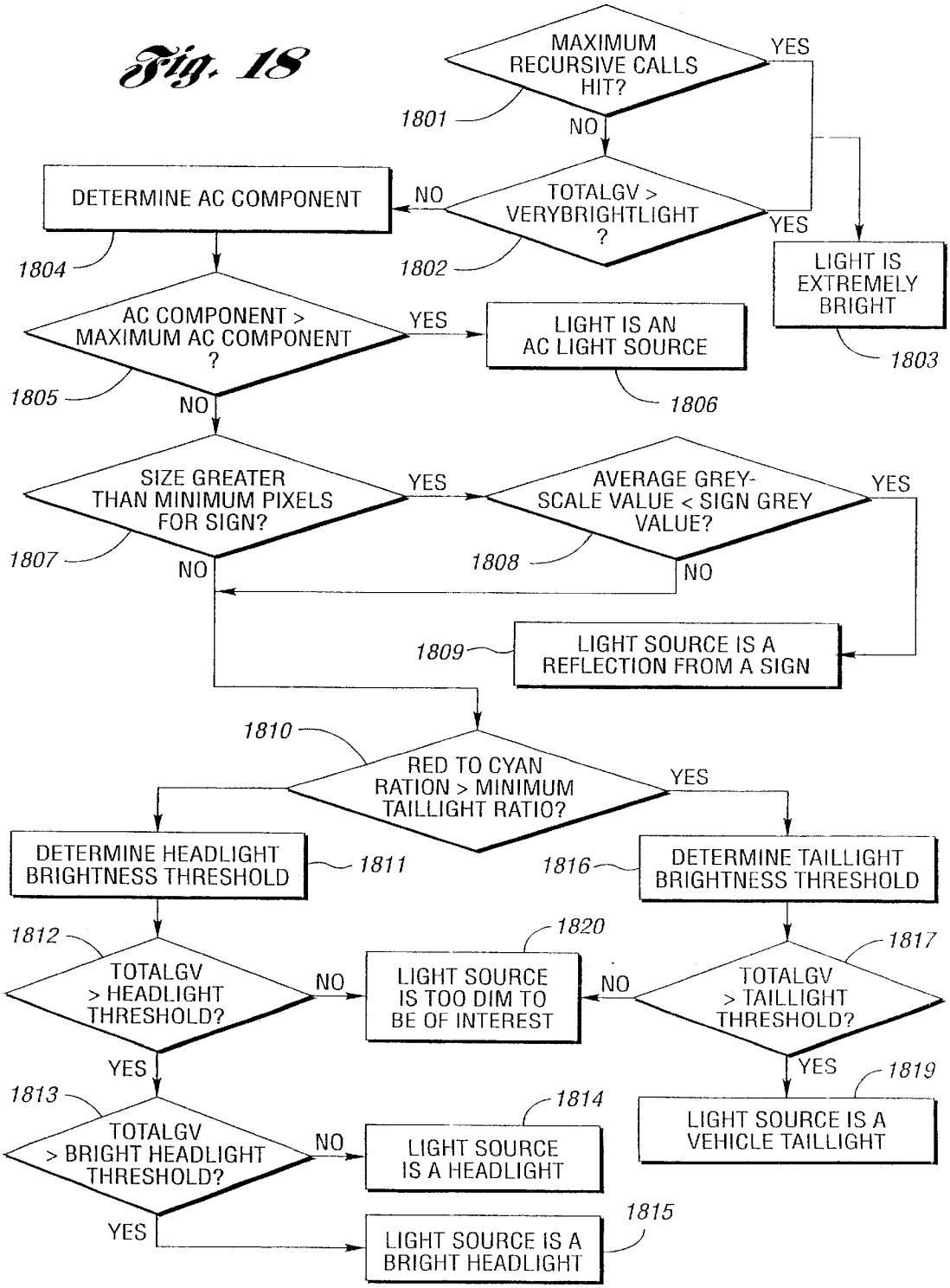
Fig. 18
MAXIMUM RECURSIVE CALLS HIT?
1801
YES
NO
TOTALGV > VERYBRIGHTLIGHT ?
1802
NO
YES
DETERMINE AC COMPONENT
1804
LIGHT IS EXTREMELY BRIGHT
1803
AC COMPONENT > MAXIMUM AC COMPONENT ?
1805
YES
NO
LIGHT IS AN AC LIGHT SOURCE
1806
SIZE GREATER THAN MINIMUM PIXELS FOR SIGN?
1807
YES
NO
AVERAGE GREY-SCALE VALUE < SIGN GREY VALUE?
1808
YES
NO
LIGHT SOURCE IS A REFLECTION FROM A SIGN
1809
RED TO CYAN RATION > MINIMUM TAILLIGHT RATIO?
1810
YES
DETERMINE HEADLIGHT BRIGHTNESS THRESHOLD
1811
DETERMINE TAILLIGHT BRIGHTNESS THRESHOLD
1816
TOTALGV > HEADLIGHT THRESHOLD?
1812
NO
YES
LIGHT SOURCE IS TOO DIM TO BE OF INTEREST
1820
TOTALGV > TAILLIGHT THRESHOLD?
1817
NO
YES
LIGHT SOURCE IS A VEHICLE TAILLIGHT
1819
TOTALGV > BRIGHT HEADLIGHT THRESHOLD?
1813
NO
YES
LIGHT SOURCE IS A HEADLIGHT
1814
LIGHT SOURCE IS A BRIGHT HEADLIGHT
1815

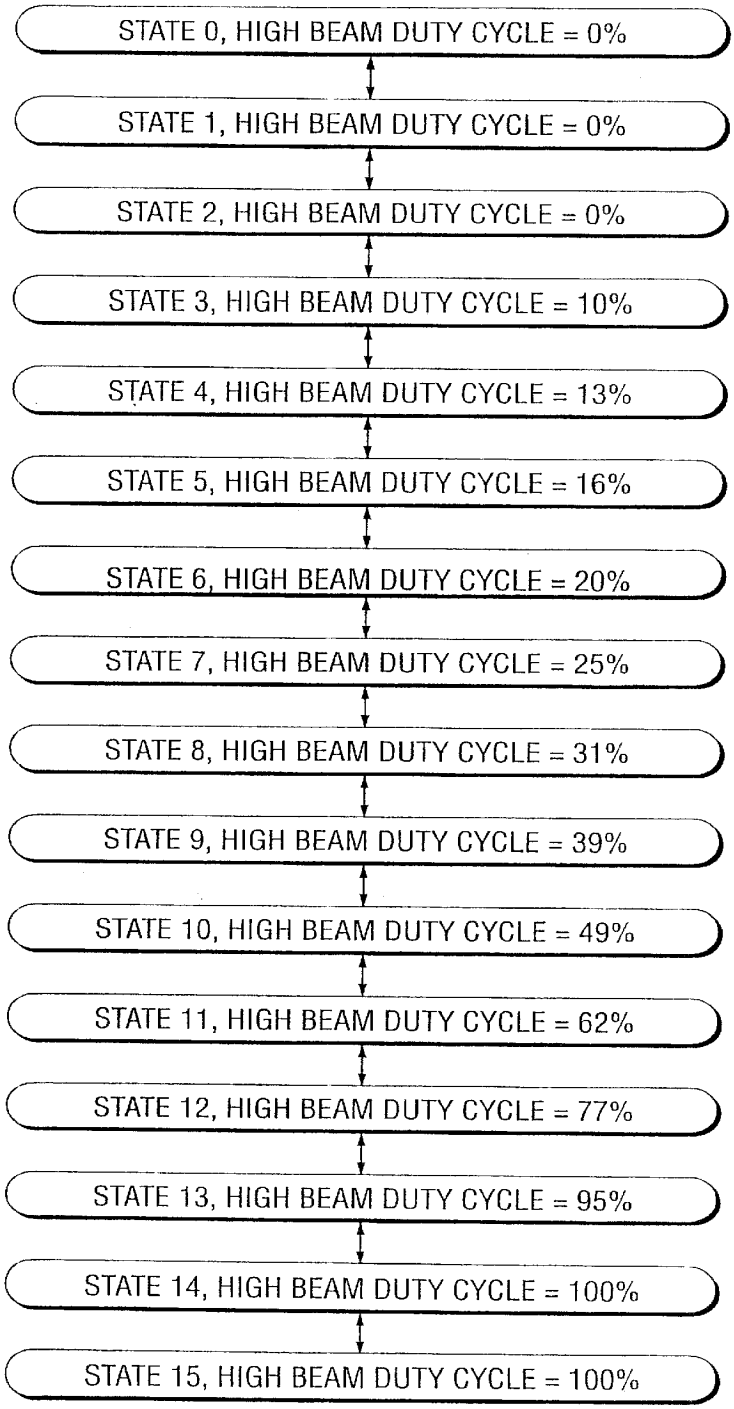
STATE 0, HIGH BEAM DUTY CYCLE = 0%
STATE 1, HIGH BEAM DUTY CYCLE = 0%
STATE 2, HIGH BEAM DUTY CYCLE = 0%
STATE 3, HIGH BEAM DUTY CYCLE = 10%
STATE 4, HIGH BEAM DUTY CYCLE = 13%
STATE 5, HIGH BEAM DUTY CYCLE = 16%
STATE 6, HIGH BEAM DUTY CYCLE = 20%
STATE 7, HIGH BEAM DUTY CYCLE = 25%
STATE 8, HIGH BEAM DUTY CYCLE = 31%
STATE 9, HIGH BEAM DUTY CYCLE = 39%
STATE 10, HIGH BEAM DUTY CYCLE = 49%
STATE 11, HIGH BEAM DUTY CYCLE = 62%
STATE 12, HIGH BEAM DUTY CYCLE = 77%
STATE 13, HIGH BEAM DUTY CYCLE = 95%
STATE 14, HIGH BEAM DUTY CYCLE = 100%
STATE 15, HIGH BEAM DUTY CYCLE = 100%

Fig. 19

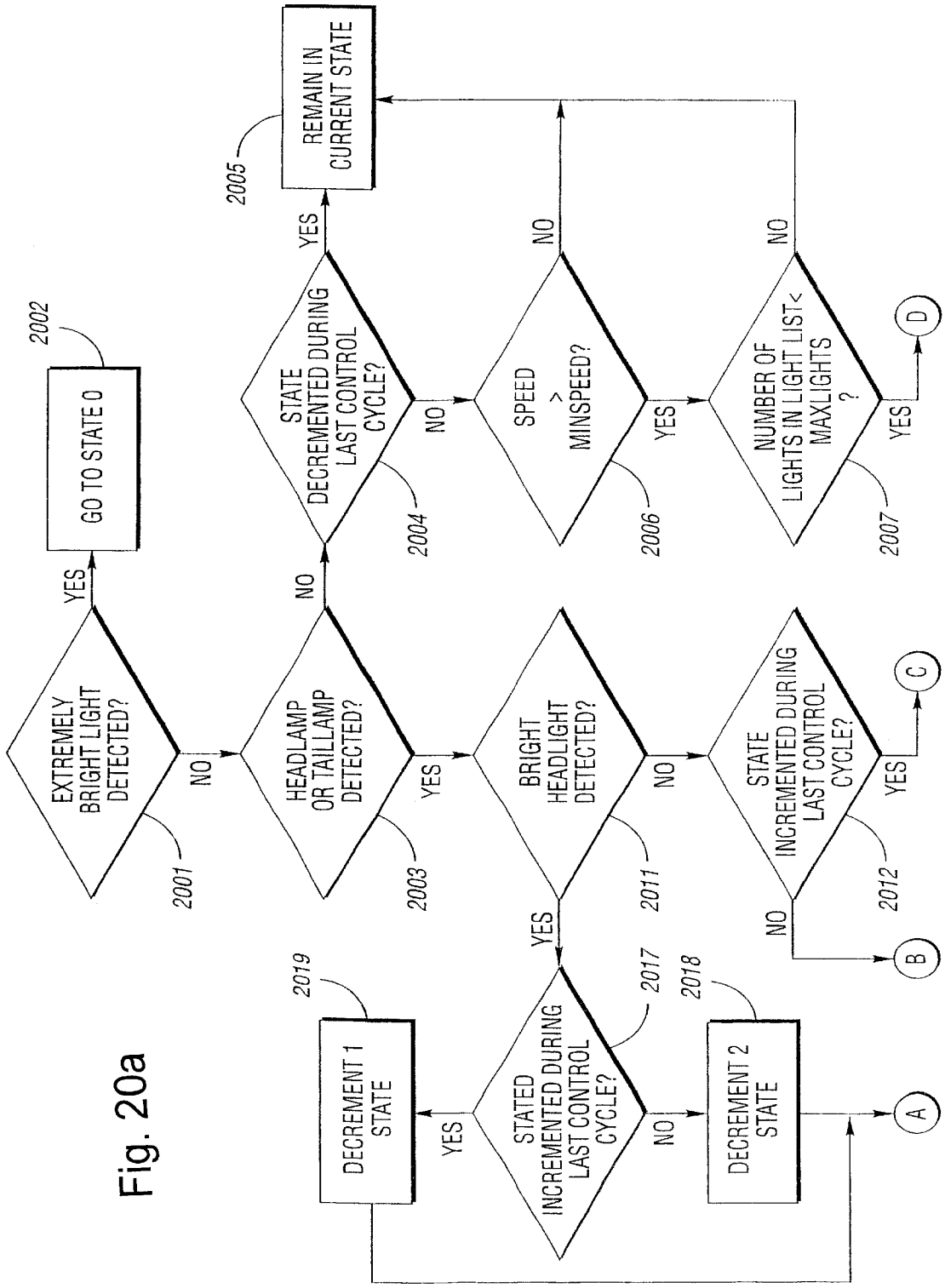
EXTREMELY BRIGHT LIGHT DETECTED?
2001
YES
NO
GO TO STATE 0
2002
HEADLAMP OR TAILLAMP DETECTED?
2003
YES
NO
STATE DECREMENTED DURING LAST CONTROL CYCLE?
2004
YES
NO
REMAIN IN CURRENT STATE
2005
SPEED > MINSPEED?
2006
YES
NO
NUMBER OF LIGHTS IN LIGHT LIST< MAXLIGHTS ?
2007
YES
NO
D
BRIGHT HEADLIGHT DETECTED?
2011
YES
NO
STATE INCREMENTED DURING LAST CONTROL CYCLE?
2012
YES
NO
C
B
STATED INCREMENTED DURING LAST CONTROL CYCLE?
2017
YES
NO
DECREMENT 1 STATE
2019
DECREMENT 2 STATE
2018
A

Fig. 20a

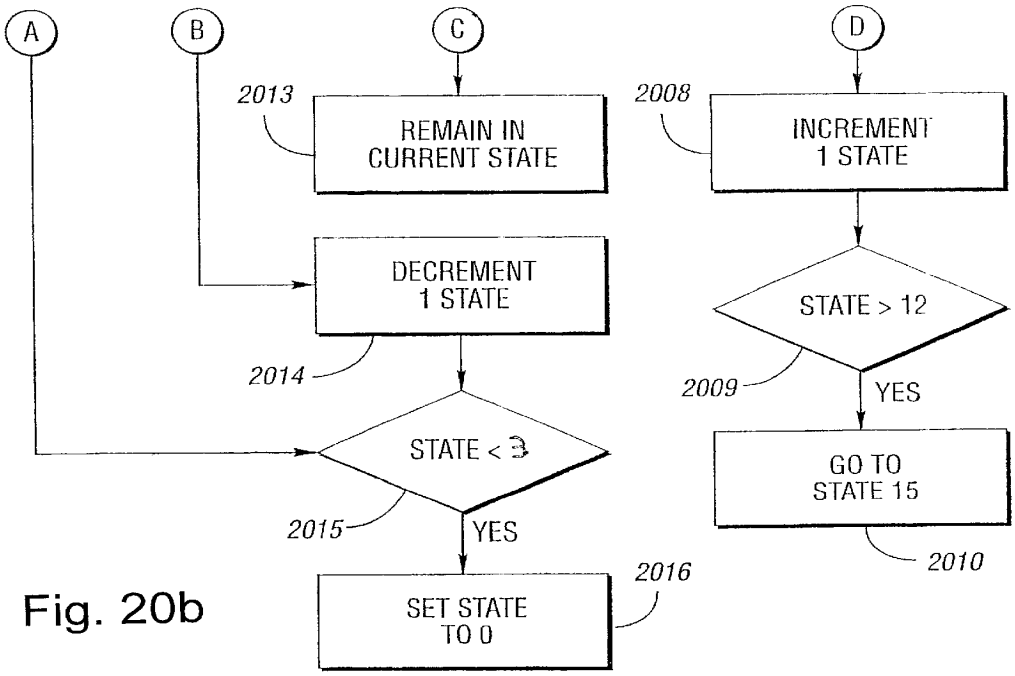

Fig. 20b

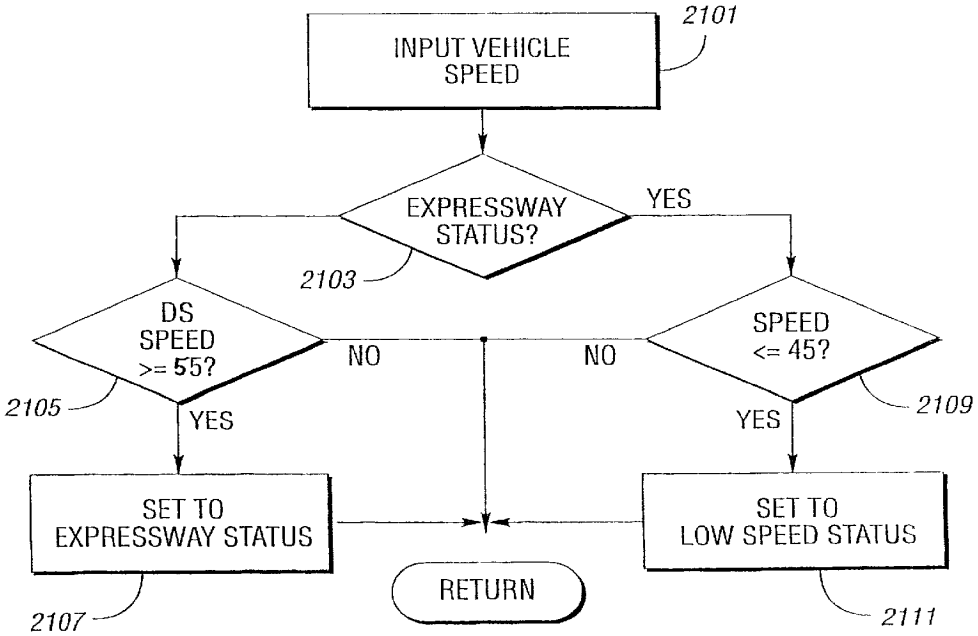

Fig. 21

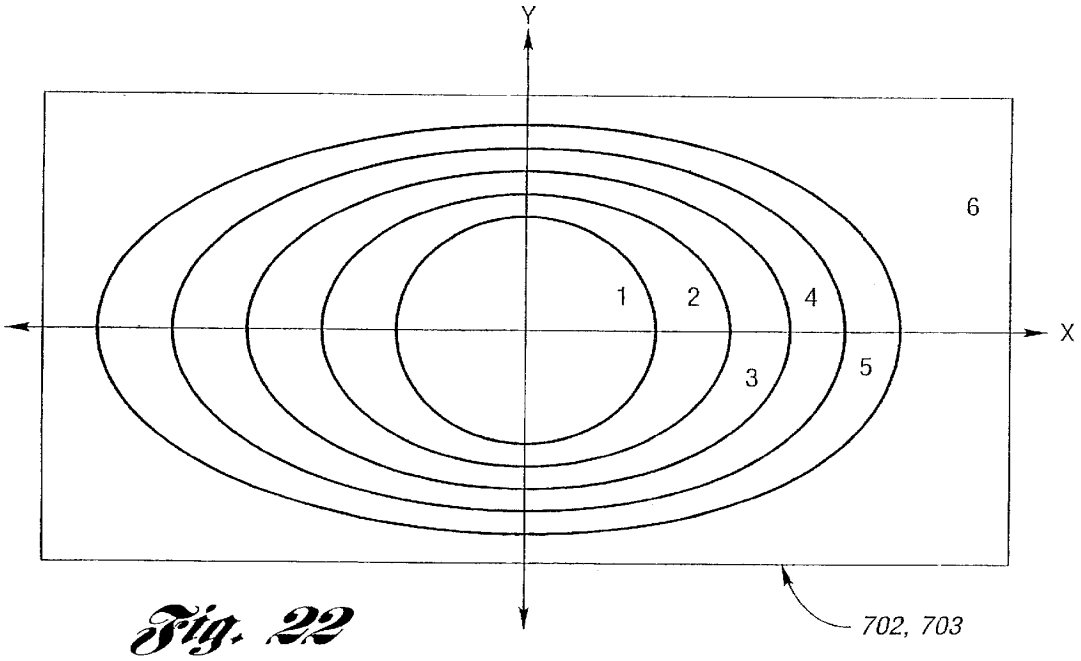
Y
X
1
2
3
4
5
6
702, 703

Fig. 22

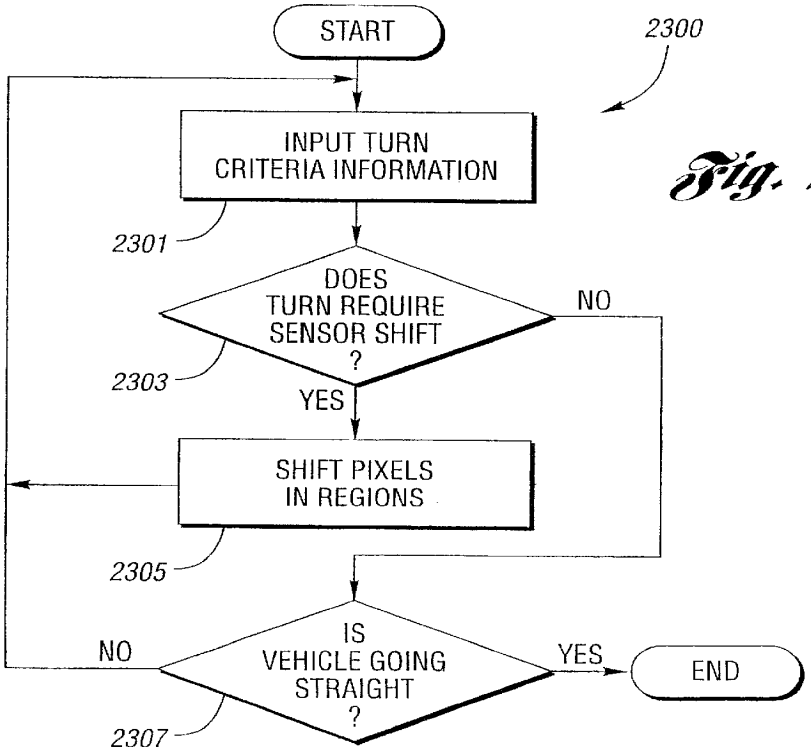
START
2300
INPUT TURN CRITERIA INFORMATION
2301
DOES TURN REQUIRE SENSOR SHIFT ?
2303
NO
YES
SHIFT PIXELS IN REGIONS
2305
IS VEHICLE GOING STRAIGHT ?
2307
NO
YES
END

Fig. 23

Fig. 24

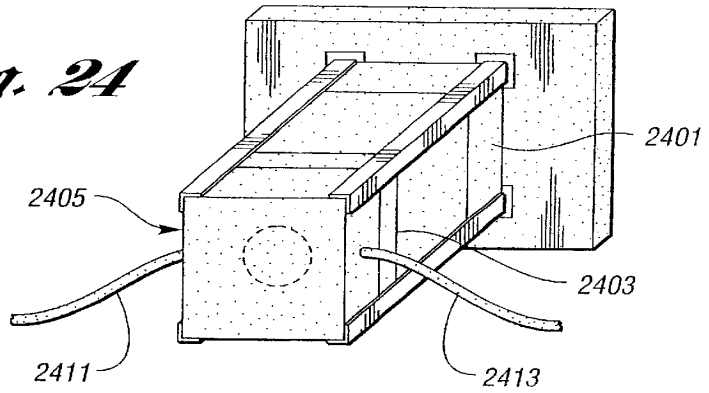

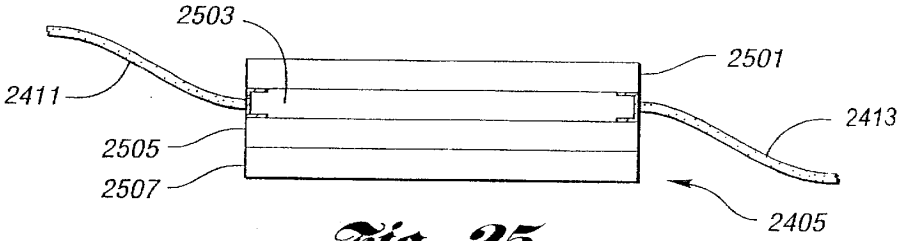

Fig. 25

Fig. 26b

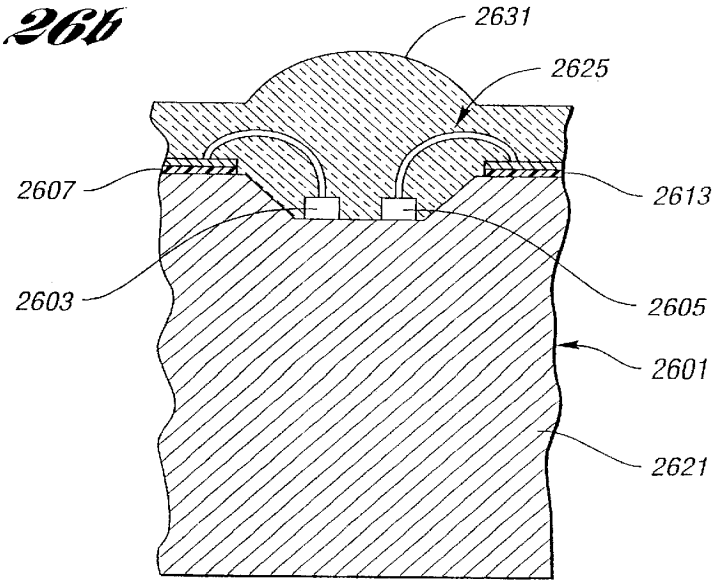

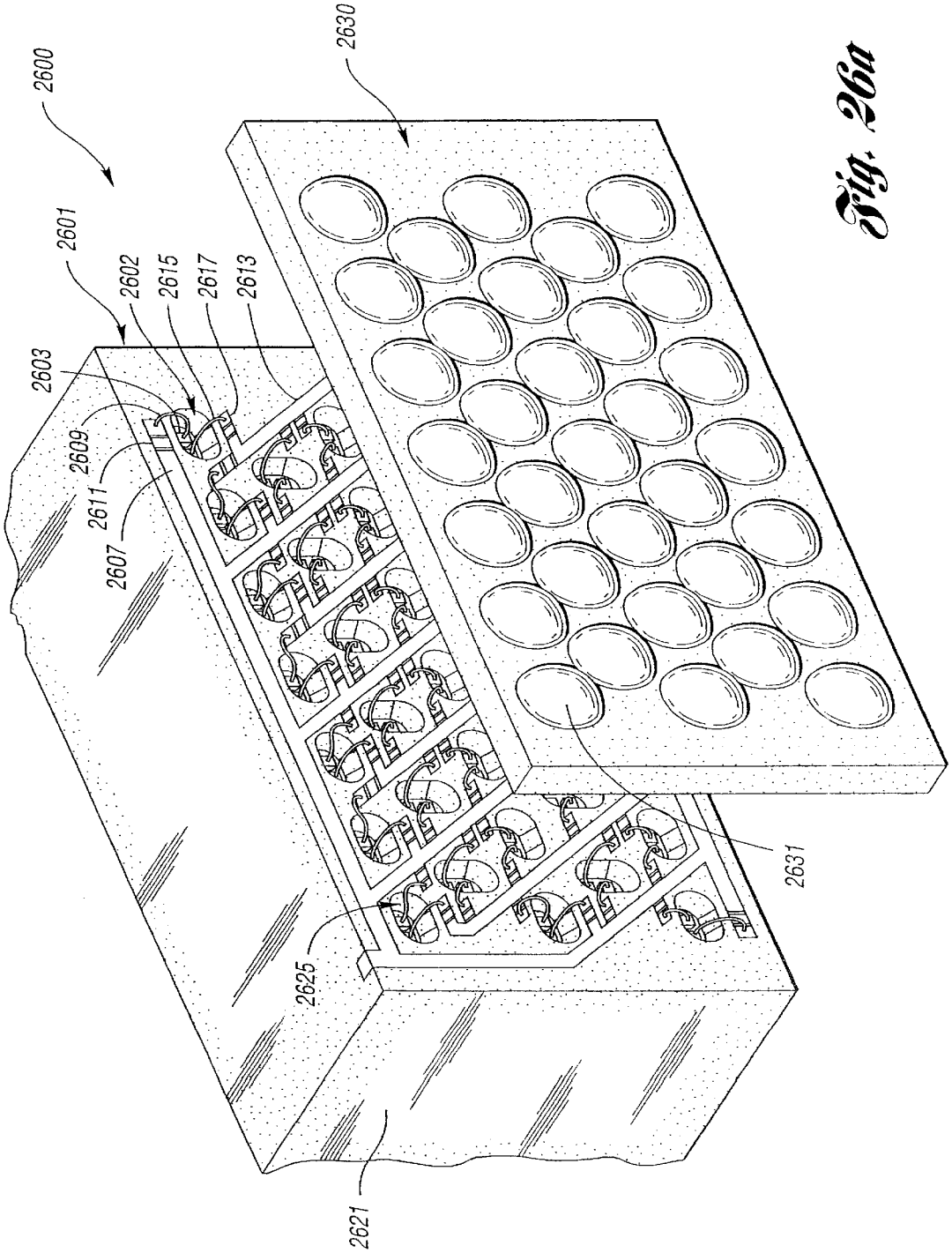
2600
2601
2602
2603
2607
2609
2611
2615
2617
2613
2630
2631
2625
2621

Fig. 26a

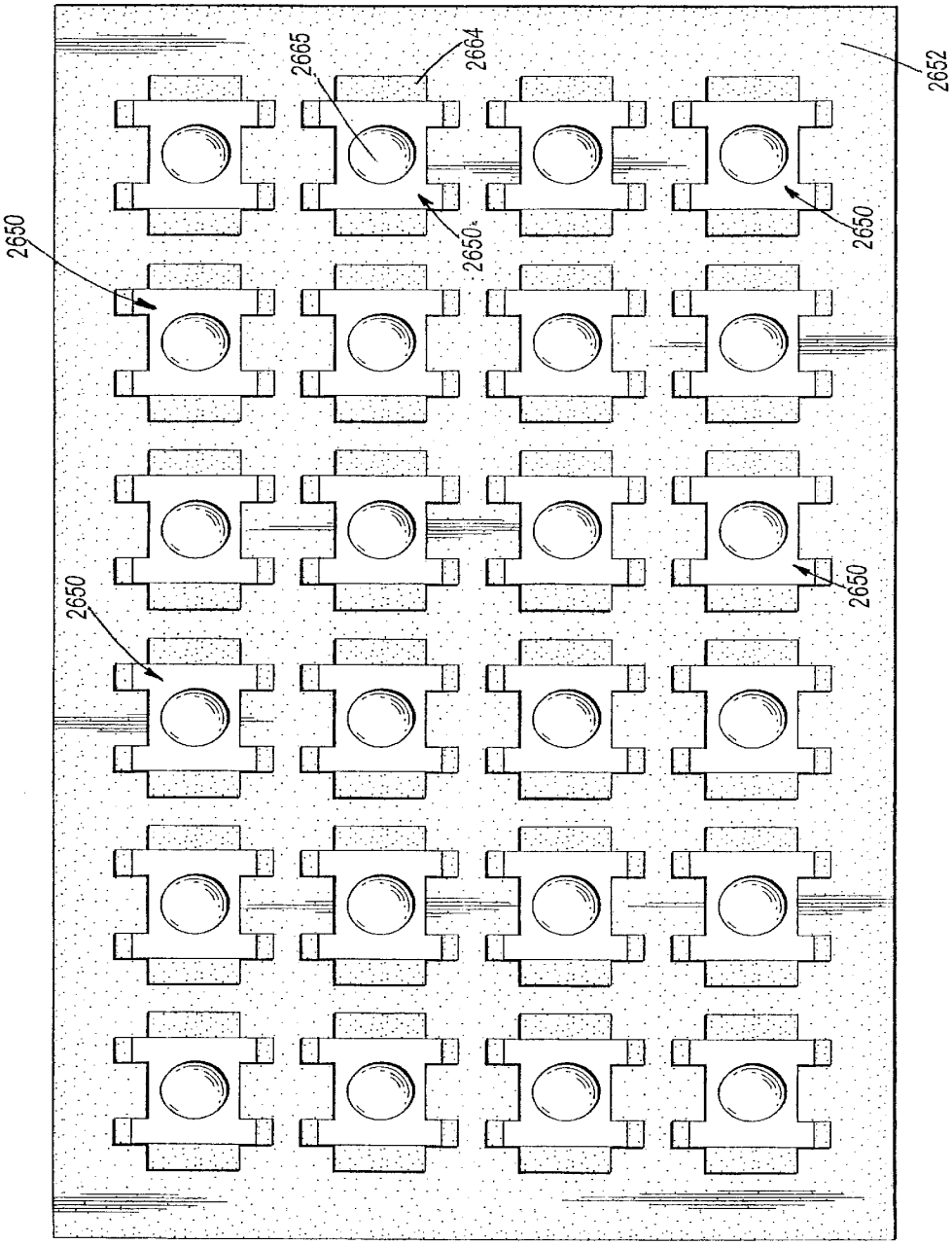

Fig. 26c

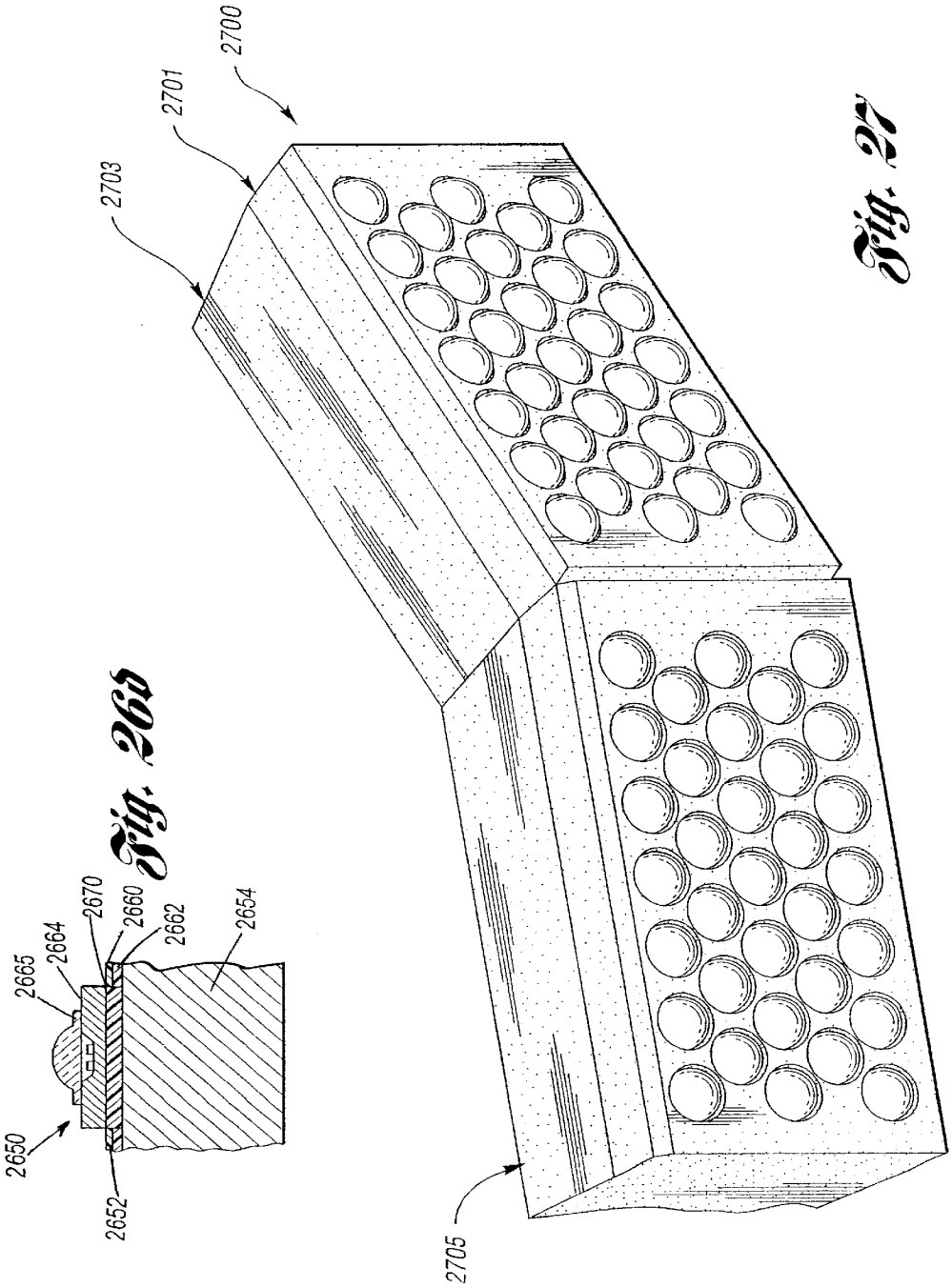

Fig. 26b

Fig. 27

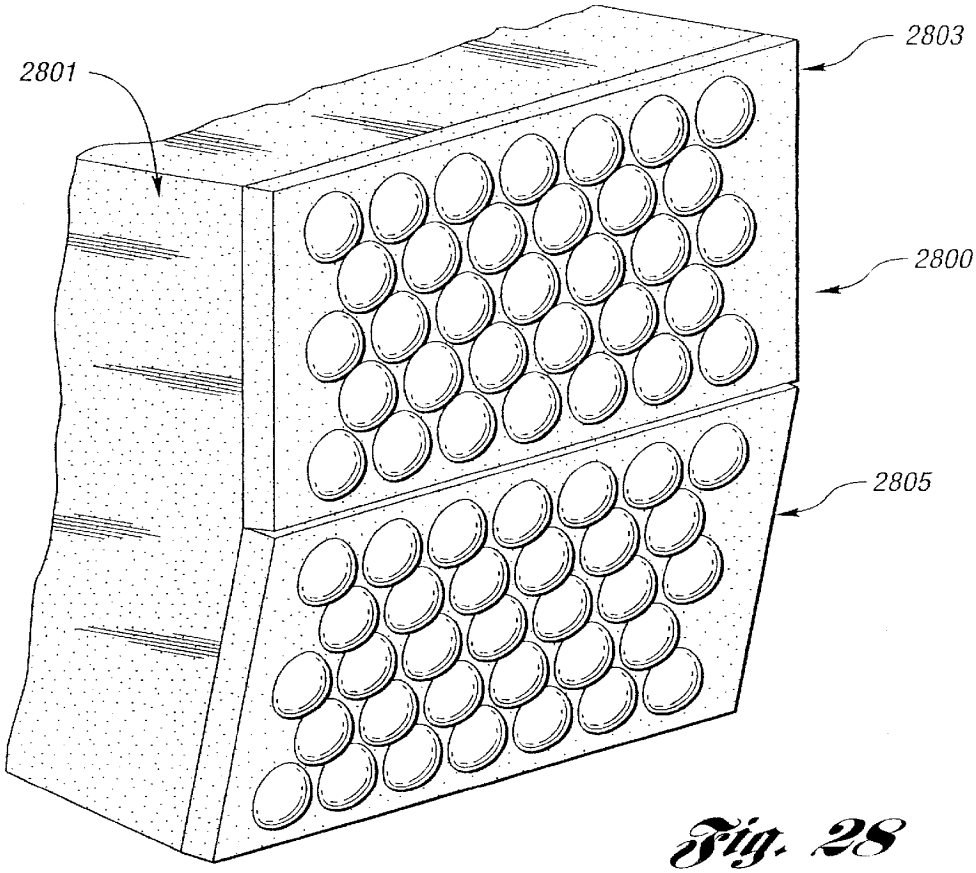
2801
2803
2800
2805

Fig. 28

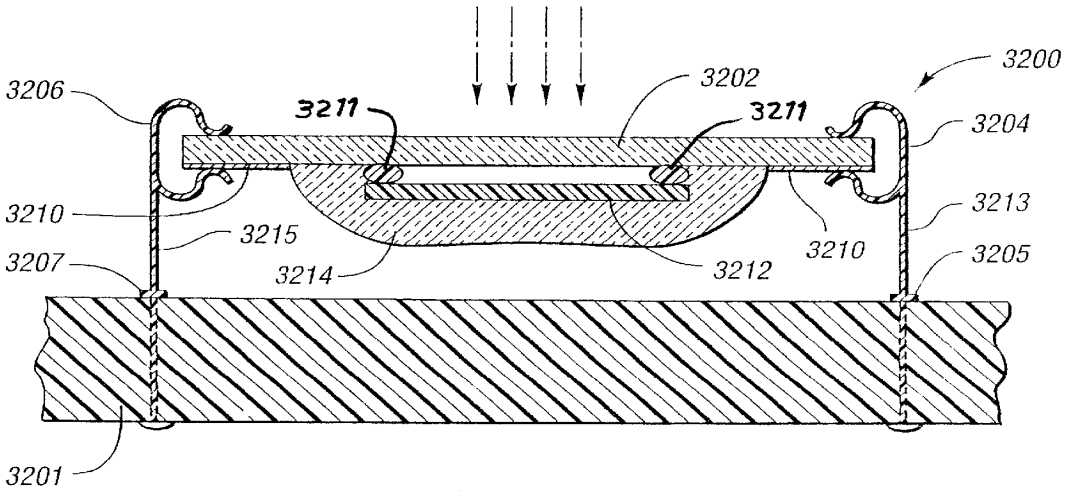
3200
3206
3211
3202
3211
3204
3210
3215
3213
3207
3214
3212
3210
3205
3201

Fig. 32

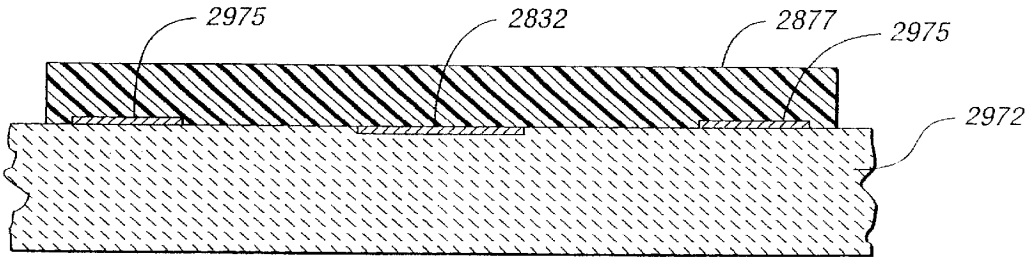

Fig. 29a

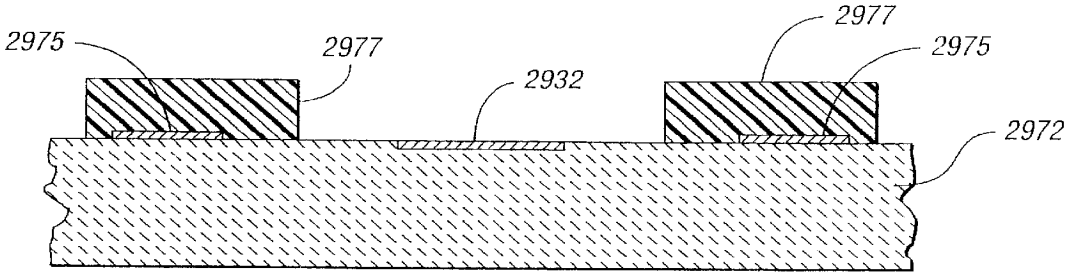

Fig. 29b

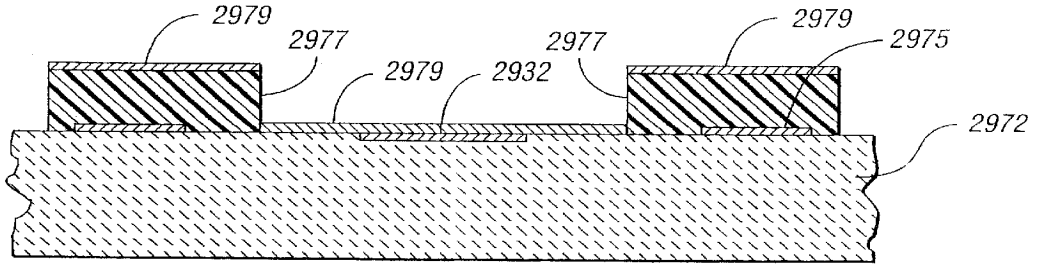

Fig. 29c

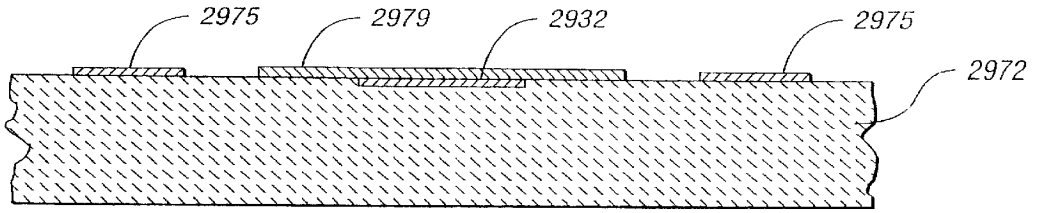

Fig. 29d

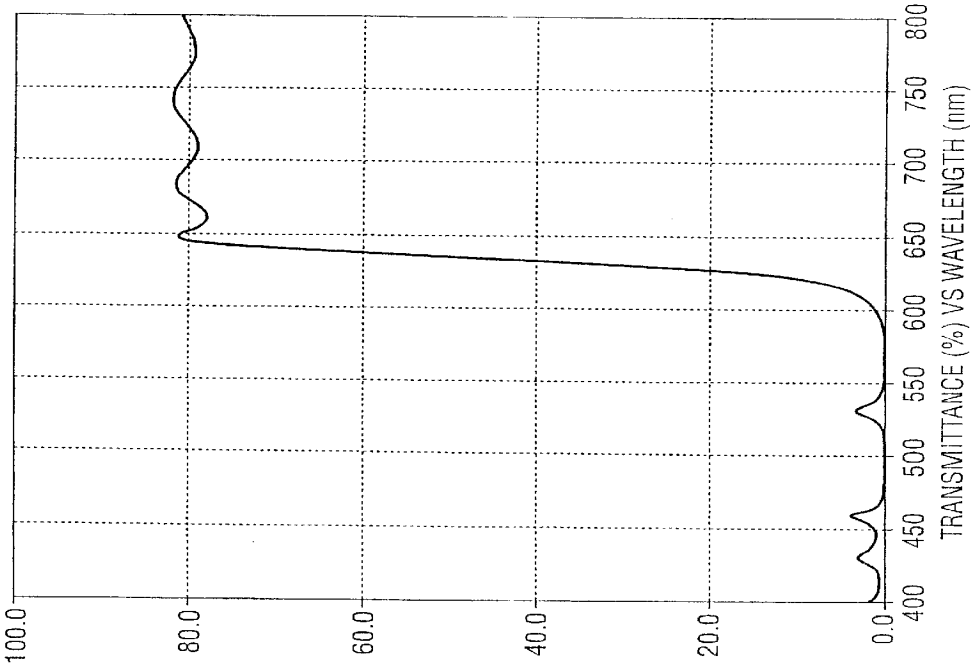
100.0
80.0
60.0
40.0
20.0
0.0
400
450
500
550
600
650
700
750
800
TRANSMITTANCE (%) VS WAVELENGTH (nm)

Fig. 30

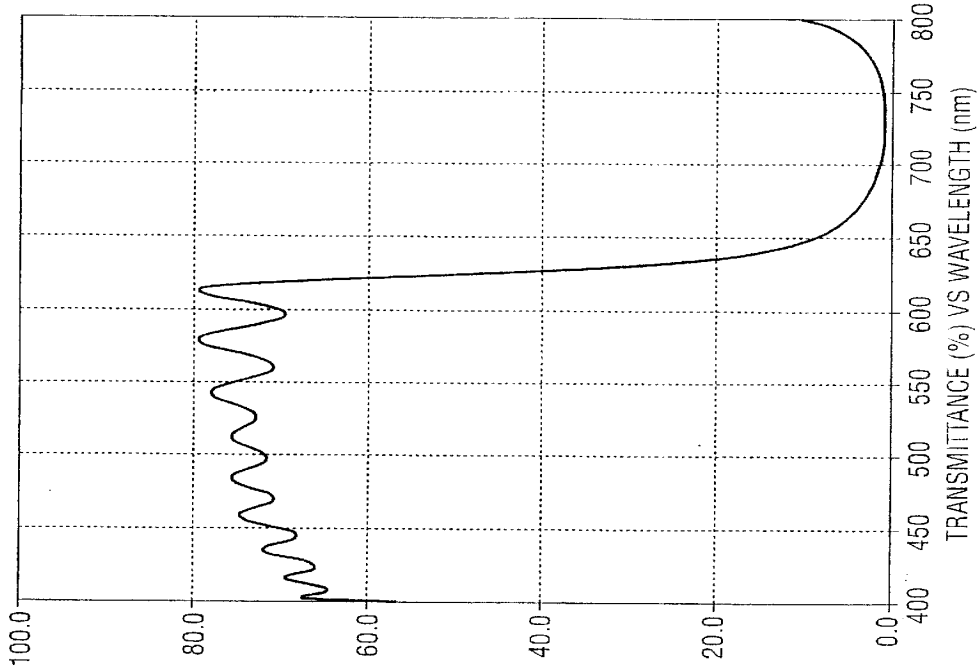
100.0
80.0
60.0
40.0
20.0
0.0
400
450
500
550
600
650
700
750
800
TRANSMITTANCE (%) VS WAVELENGTH (nm)

Fig. 31

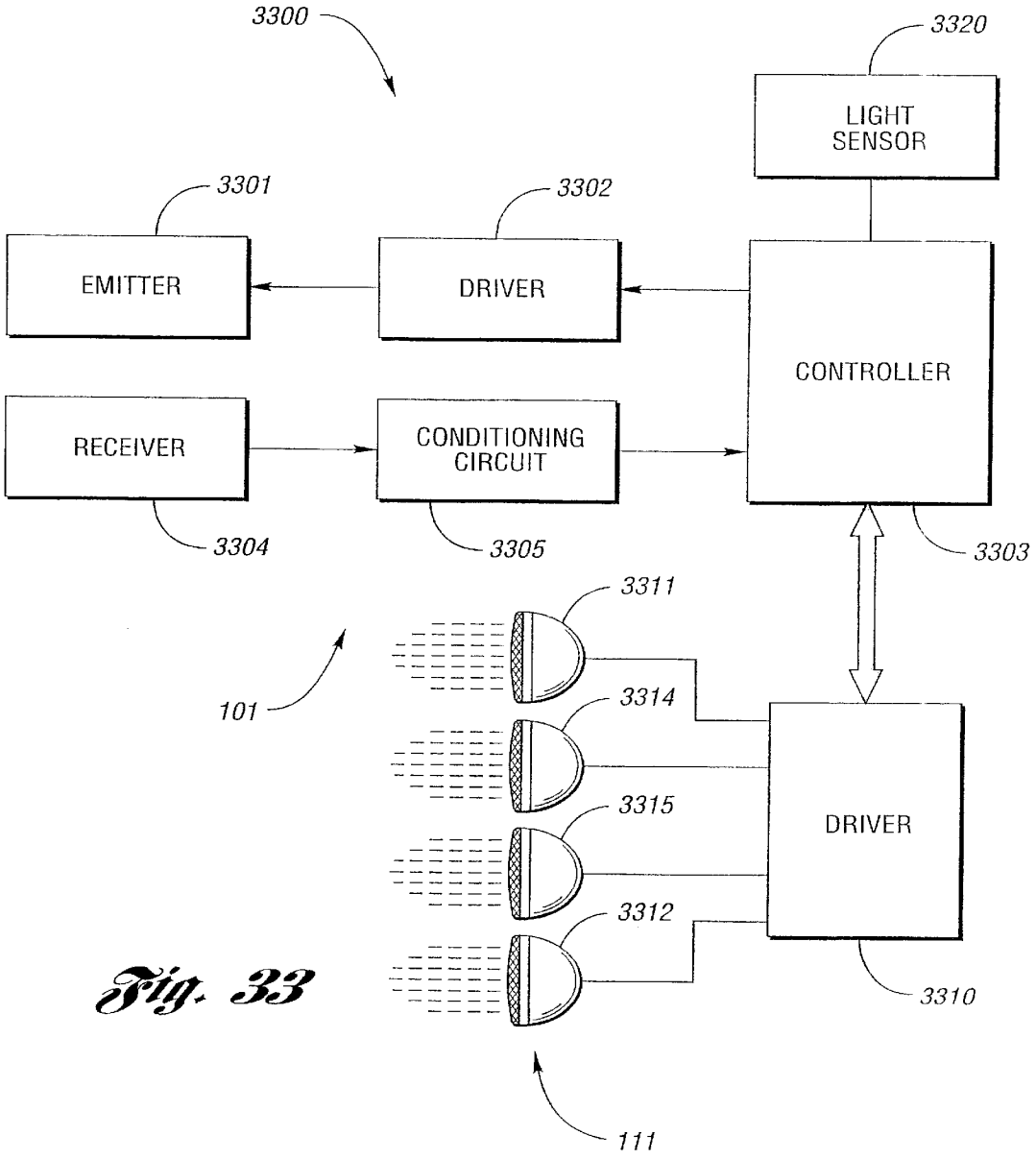
3300
3320
LIGHT SENSOR
3301
3302
EMITTER
DRIVER
CONTROLLER
RECEIVER
CONDITIONING CIRCUIT
3304
3305
3303
3311
101
3314
3315
DRIVER
3312
3310
111

Fig. 33

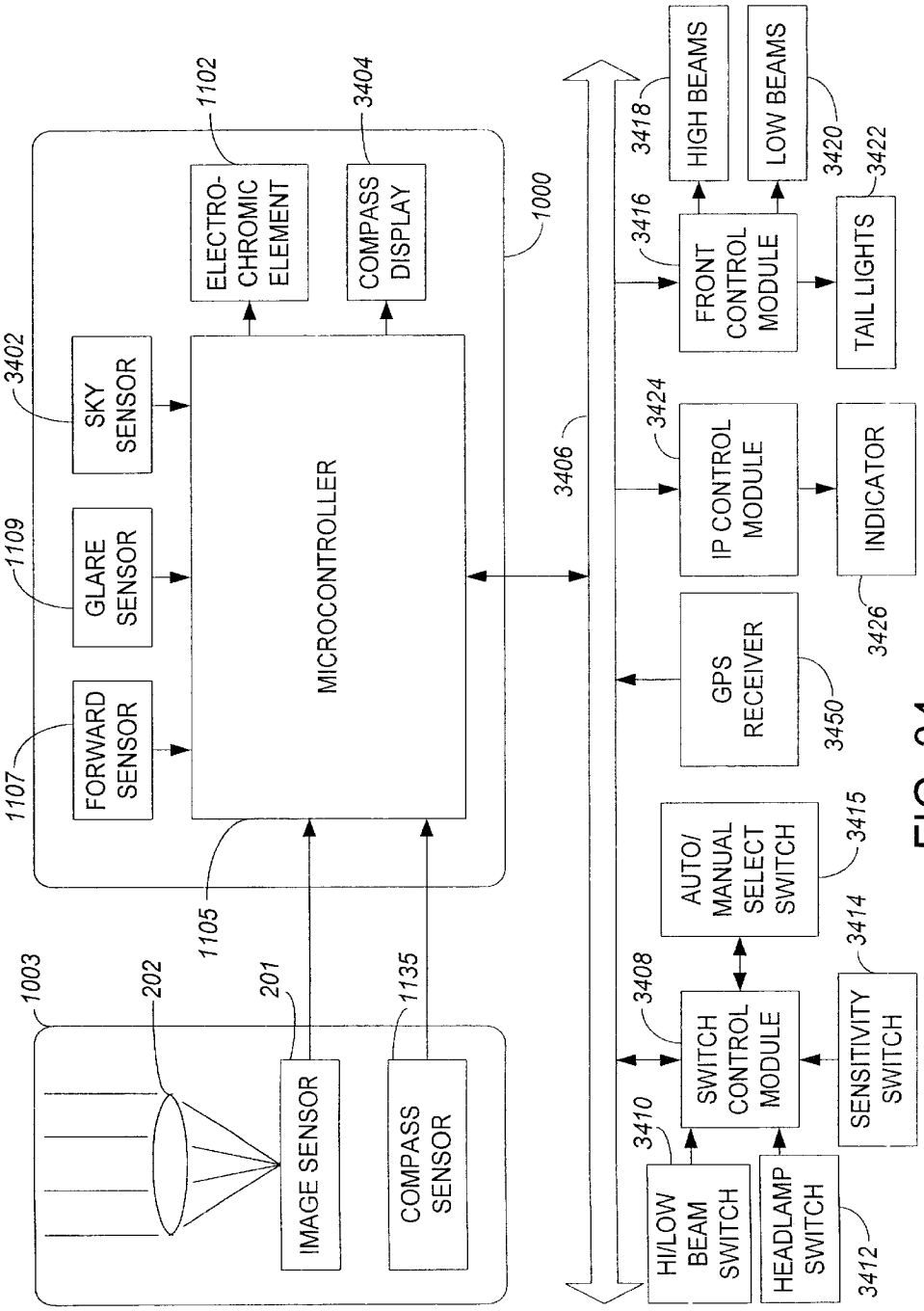
1102
3404
ELECTRO-CHROMIC ELEMENT
COMPASS DISPLAY
1000
3402
SKY SENSOR
1109
GLARE SENSOR
1107
FORWARD SENSOR
MICROCONTROLLER
1105
3406
1003
202
201
1135
IMAGE SENSOR
COMPASS SENSOR
3418
HIGH BEAMS
LOW BEAMS
3420
3422
3416
FRONT CONTROL MODULE
TAIL LIGHTS
3424
IP CONTROL MODULE
INDICATOR
3426
GPS RECEIVER
3450
AUTO/ MANUAL SELECT SWITCH
3415
3414
3408
SWITCH CONTROL MODULE
SENSITIVITY SWITCH
3410
HI/LOW BEAM SWITCH
HEADLAMP SWITCH
3412

FIG. 34

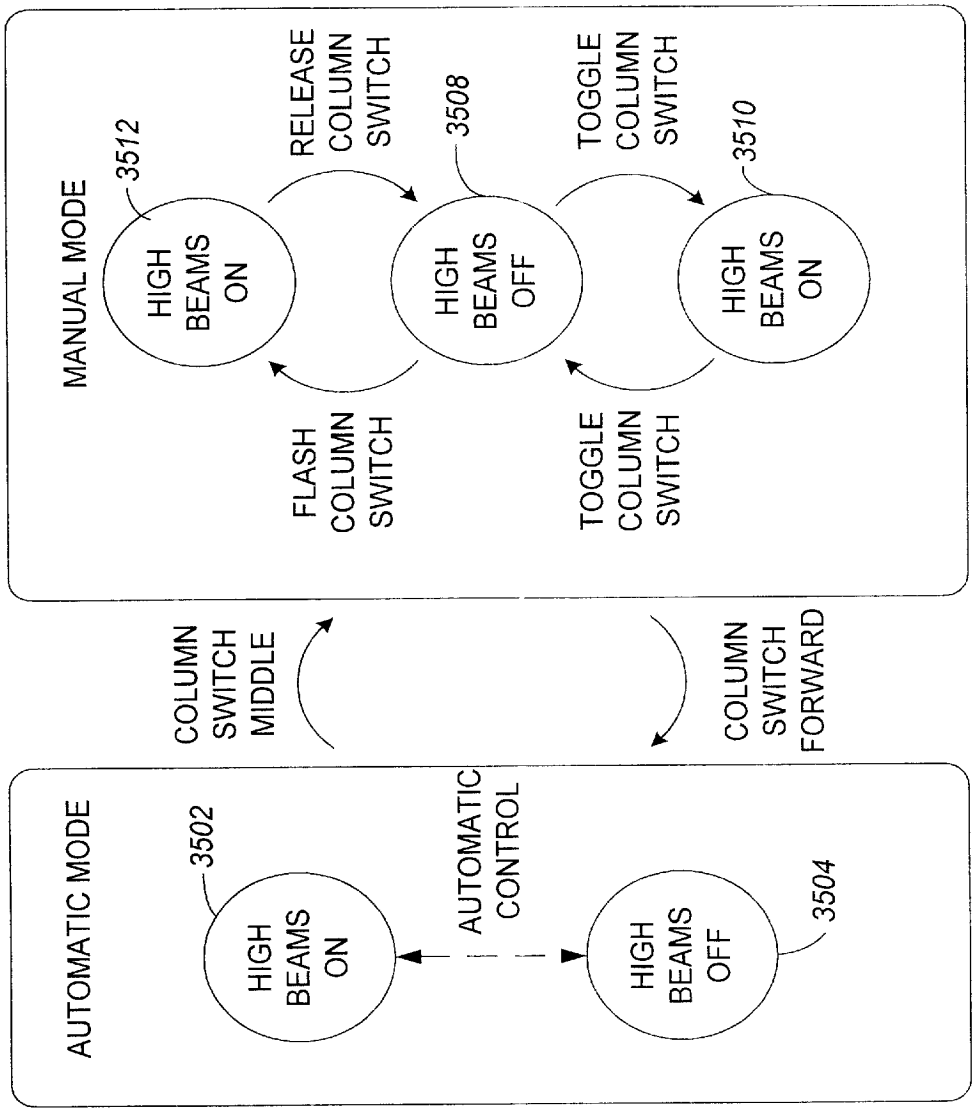
MANUAL MODE
3512
HIGH BEAMS ON
RELEASE COLUMN SWITCH
3508
HIGH BEAMS OFF
TOGGLE COLUMN SWITCH
3510
HIGH BEAMS ON
FLASH COLUMN SWITCH
TOGGLE COLUMN SWITCH
COLUMN SWITCH MIDDLE
COLUMN SWITCH FORWARD
AUTOMATIC MODE
3502
HIGH BEAMS ON
AUTOMATIC CONTROL
HIGH BEAMS OFF
3504

FIG. 35

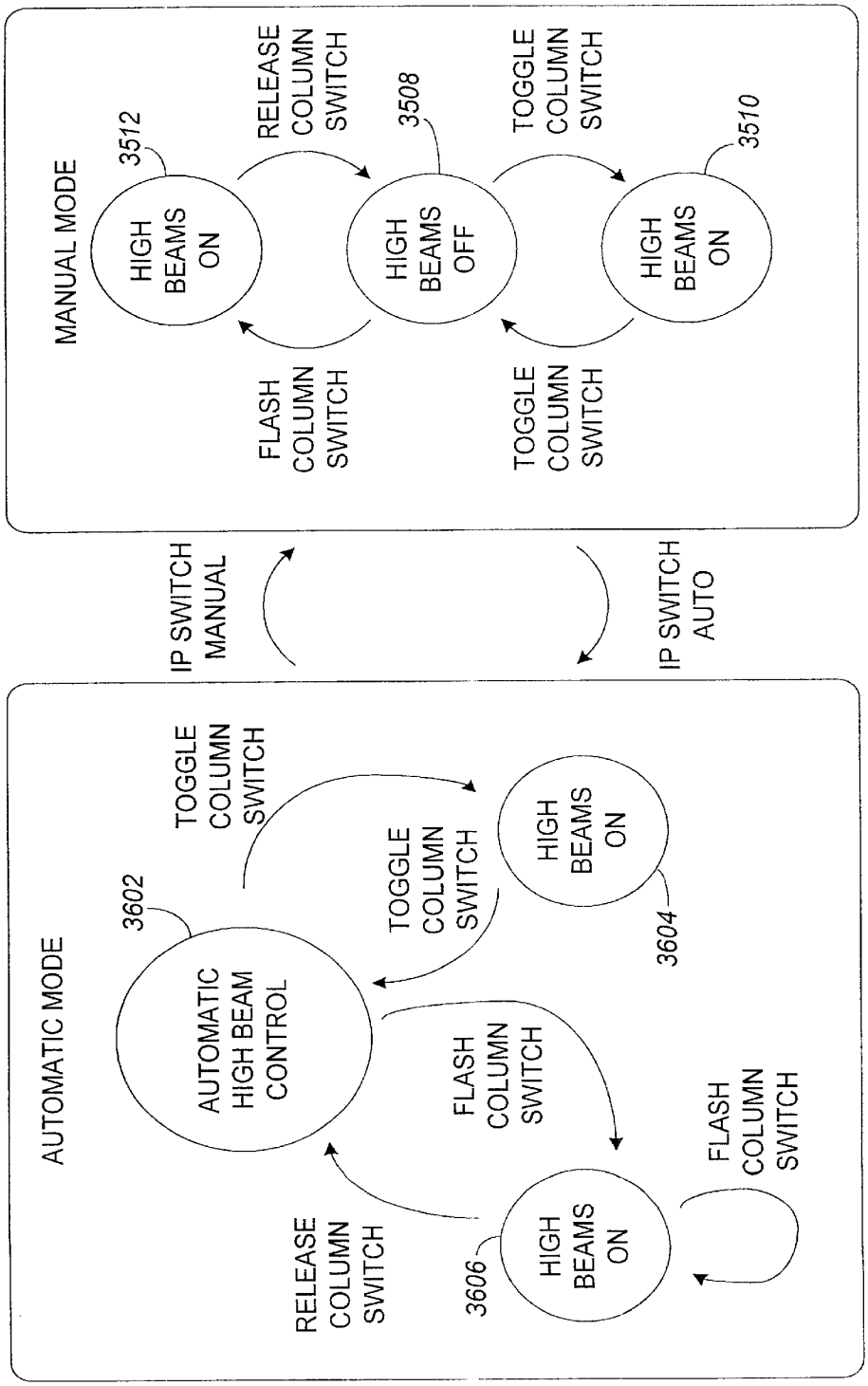
MANUAL MODE
3512
HIGH BEAMS ON
RELEASE COLUMN SWITCH
3508
HIGH BEAMS OFF
TOGGLE COLUMN SWITCH
3510
HIGH BEAMS ON
FLASH COLUMN SWITCH
TOGGLE COLUMN SWITCH
IP SWITCH MANUAL
IP SWITCH AUTO
AUTOMATIC MODE
3602
AUTOMATIC HIGH BEAM CONTROL
TOGGLE COLUMN SWITCH
TOGGLE COLUMN SWITCH
HIGH BEAMS ON
3604
FLASH COLUMN SWITCH
FLASH COLUMN SWITCH
RELEASE COLUMN SWITCH
3606
HIGH BEAMS ON

FIG. 36

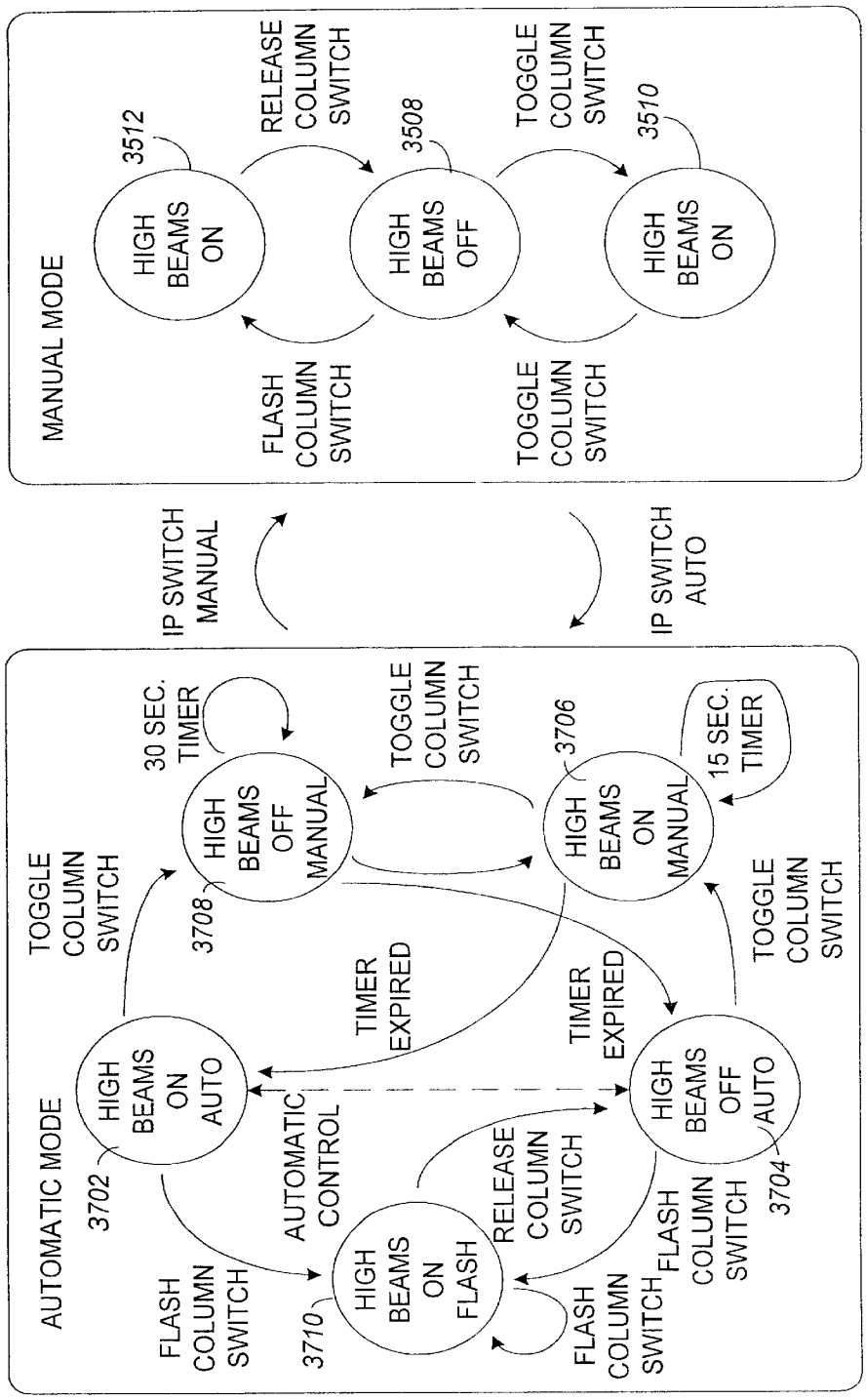
MANUAL MODE
HIGH BEAMS ON
3512
RELEASE COLUMN SWITCH
HIGH BEAMS OFF
3508
TOGGLE COLUMN SWITCH
HIGH BEAMS ON
3510
FLASH COLUMN SWITCH
TOGGLE COLUMN SWITCH
IP SWITCH MANUAL
IP SWITCH AUTO
AUTOMATIC MODE
HIGH BEAMS ON AUTO
3702
TOGGLE COLUMN SWITCH
30 SEC. TIMER
HIGH BEAMS OFF MANUAL
3708
TOGGLE COLUMN SWITCH
HIGH BEAMS ON MANUAL
3706
15 SEC. TIMER
TIMER EXPIRED
TIMER EXPIRED
TOGGLE COLUMN SWITCH
AUTOMATIC CONTROL
HIGH BEAMS OFF AUTO
3704
FLASH COLUMN SWITCH
HIGH BEAMS ON FLASH
3710
RELEASE COLUMN SWITCH
FLASH COLUMN SWITCH
FLASH COLUMN SWITCH

FIG. 37

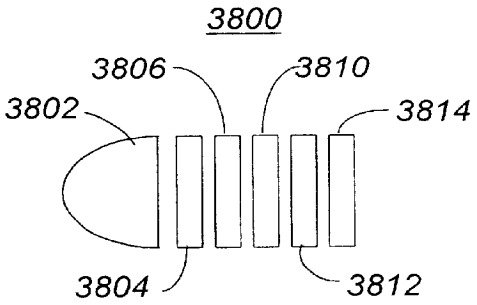

FIG. 38

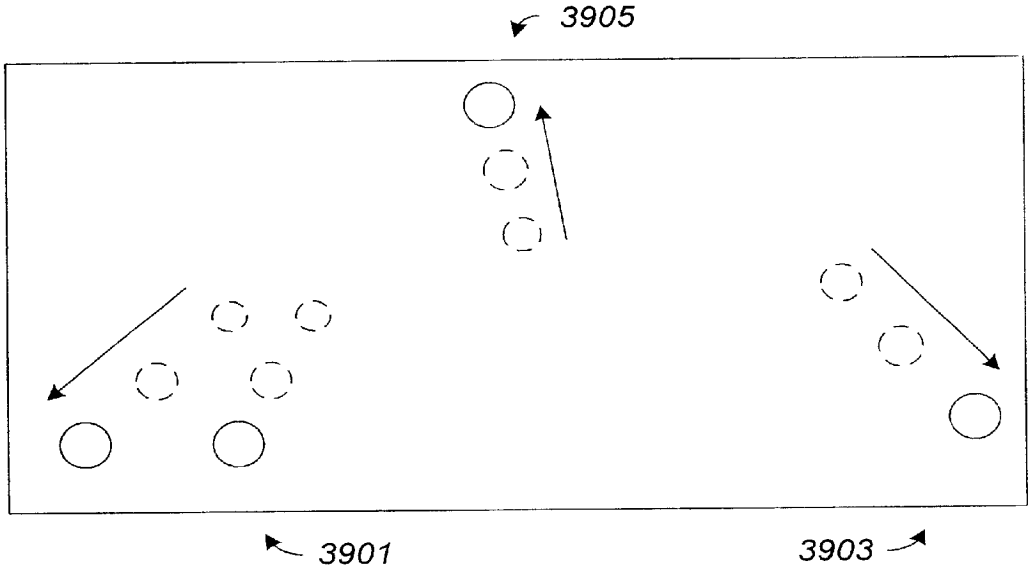

FIG. 39

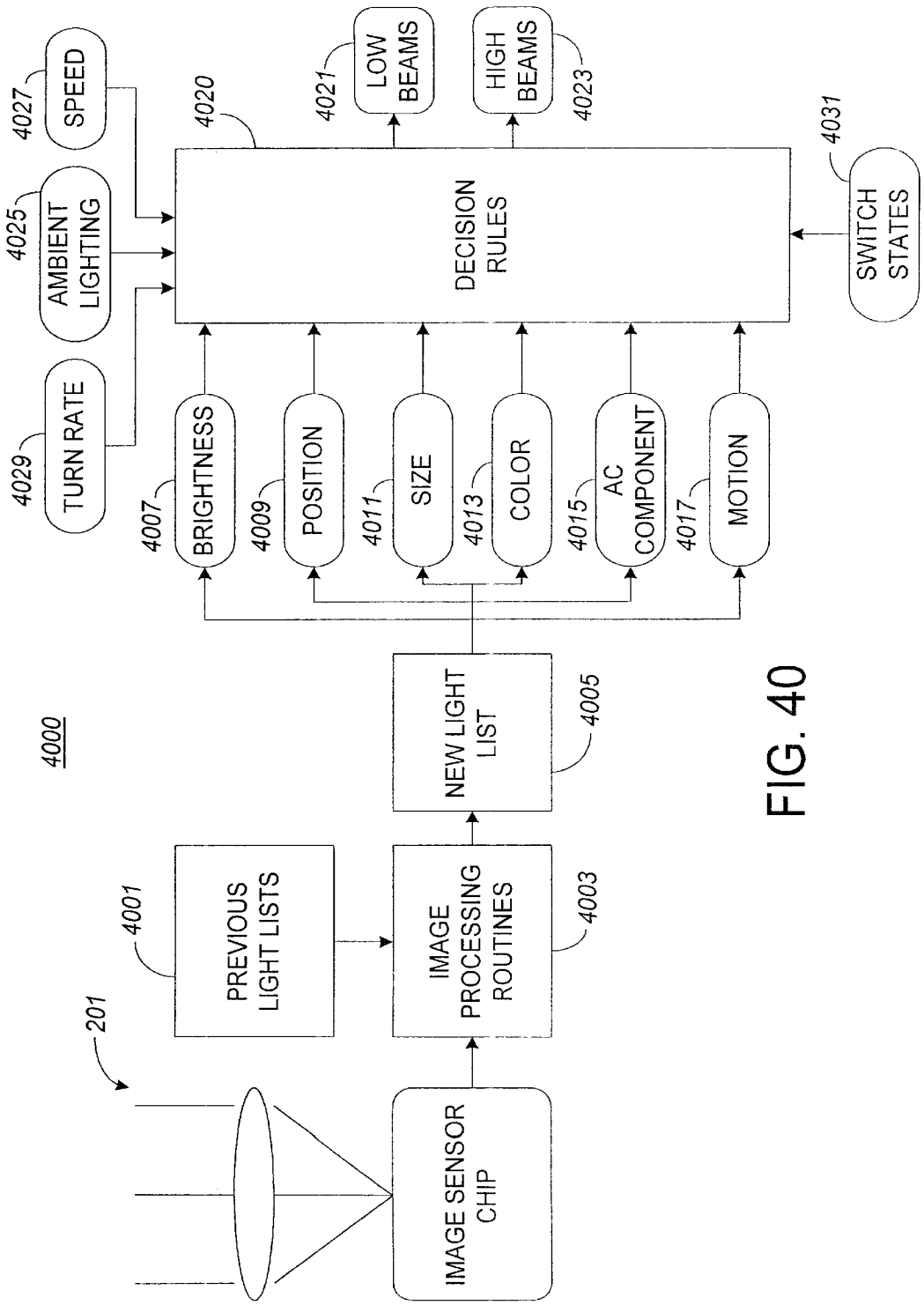
4000
201
IMAGE SENSOR CHIP
4001
PREVIOUS LIGHT LISTS
IMAGE PROCESSING ROUTINES
4003
NEW LIGHT LIST
4005
4007
BRIGHTNESS
4009
POSITION
4011
SIZE
4013
COLOR
4015
AC COMPONENT
4017
MOTION
4029
TURN RATE
4025
AMBIENT LIGHTING
4027
SPEED
4020
DECISION RULES
4021
LOW BEAMS
4023
HIGH BEAMS
4031
SWITCH STATES

FIG. 40

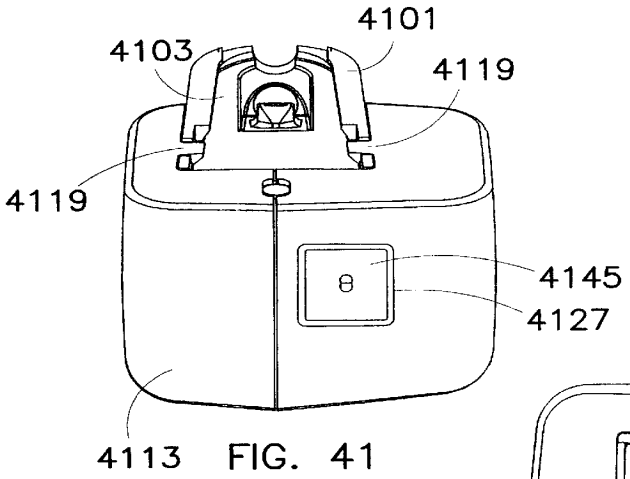

FIG. 41

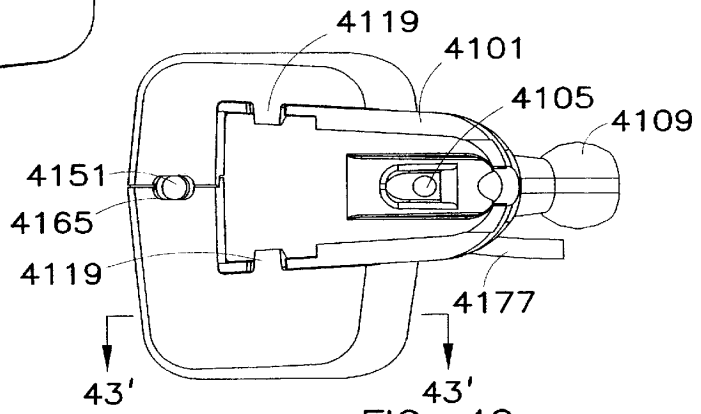

FIG. 42

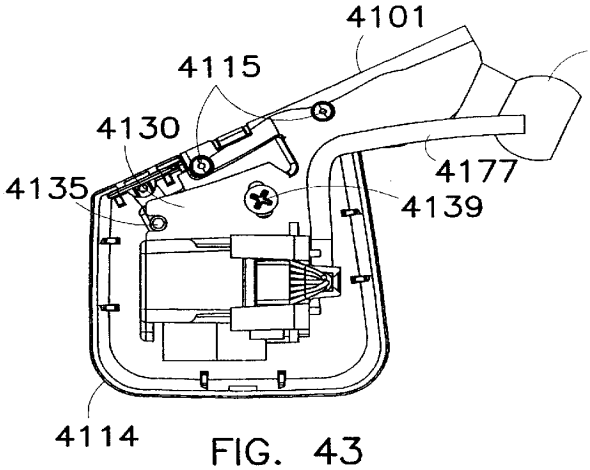

FIG. 43

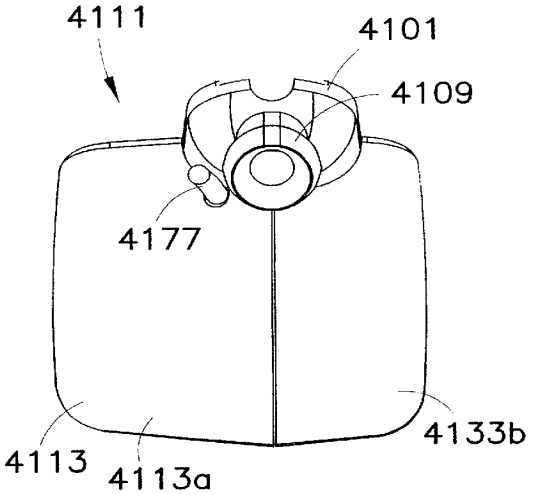

FIG. 45

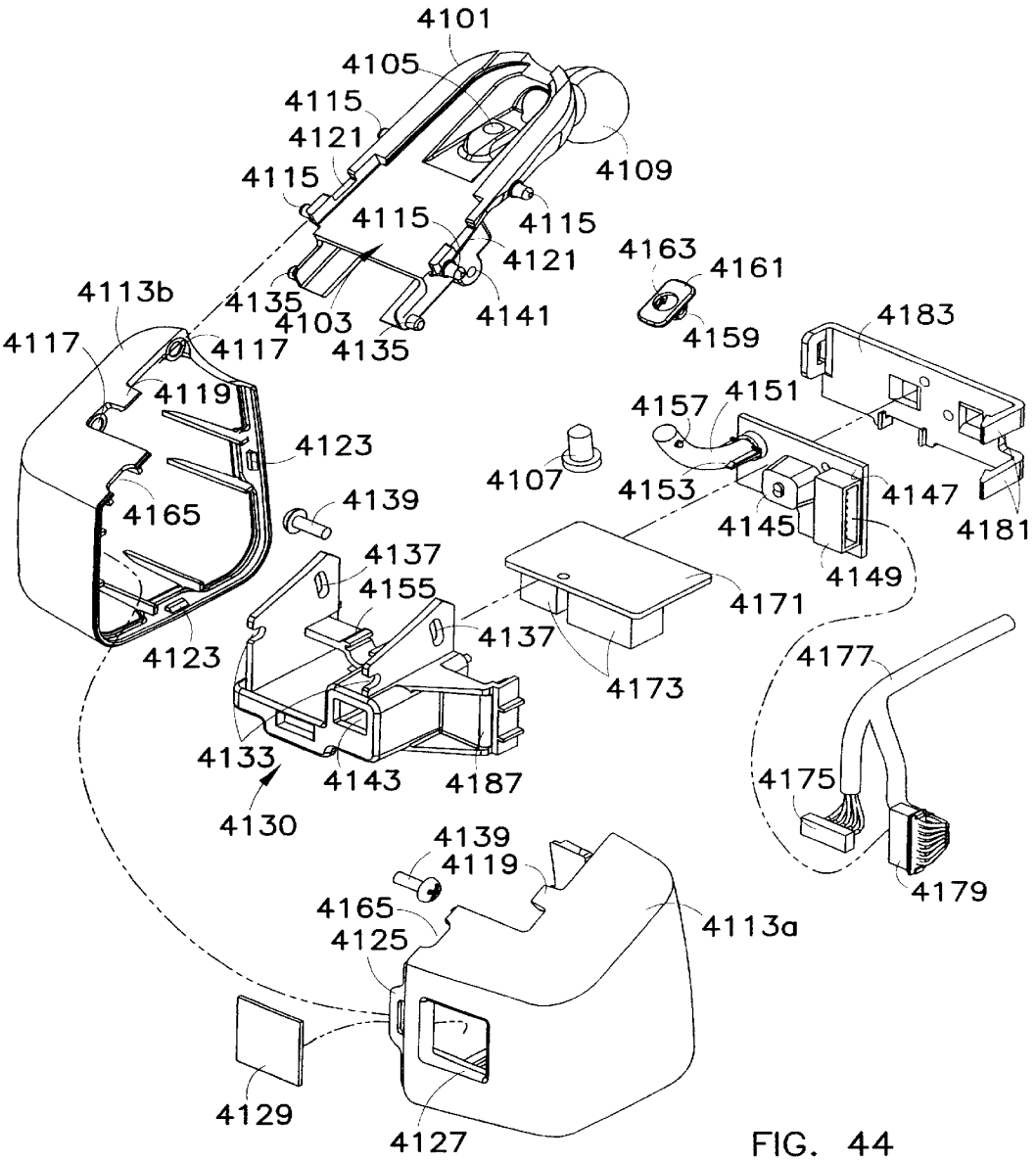
4101
4105
4115
4121
4115
4109
4115
4115
4121
4163
4161
4113b
4135
4103
4141
4159
4183
4117
4117
4135
4119
4157
4151
4123
4107
4153
4147
4139
4145
4181
4165
4137
4149
4155
4171
4137
4123
4173
4177
4133
4143
4187
4175
4130
4139
4119
4179
4165
4113a
4125
4129
4127

FIG. 44

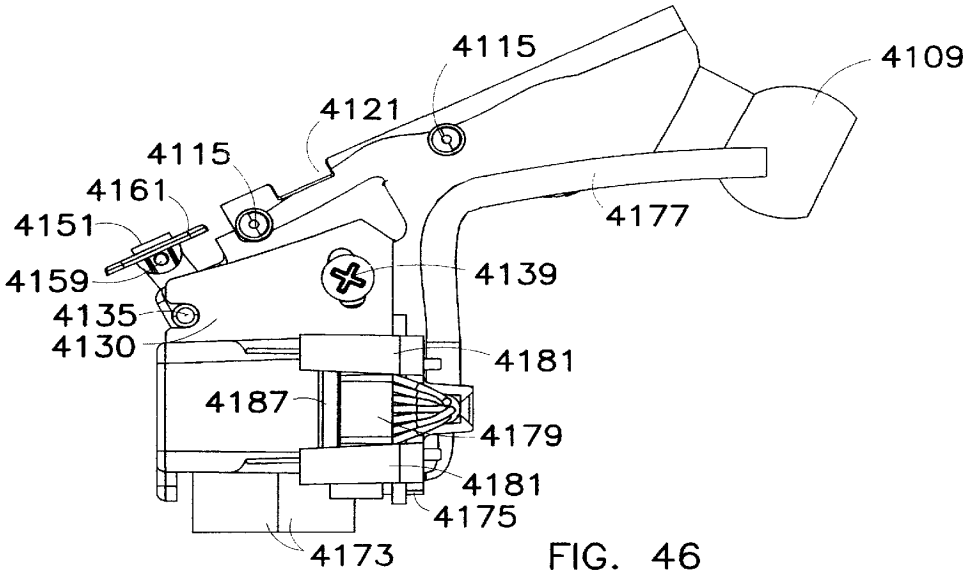
4115
4109
4121
4115
4161
4151
4177
4159
4139
4135
4130
4181
4187
4179
4181
4175
4173

FIG. 46

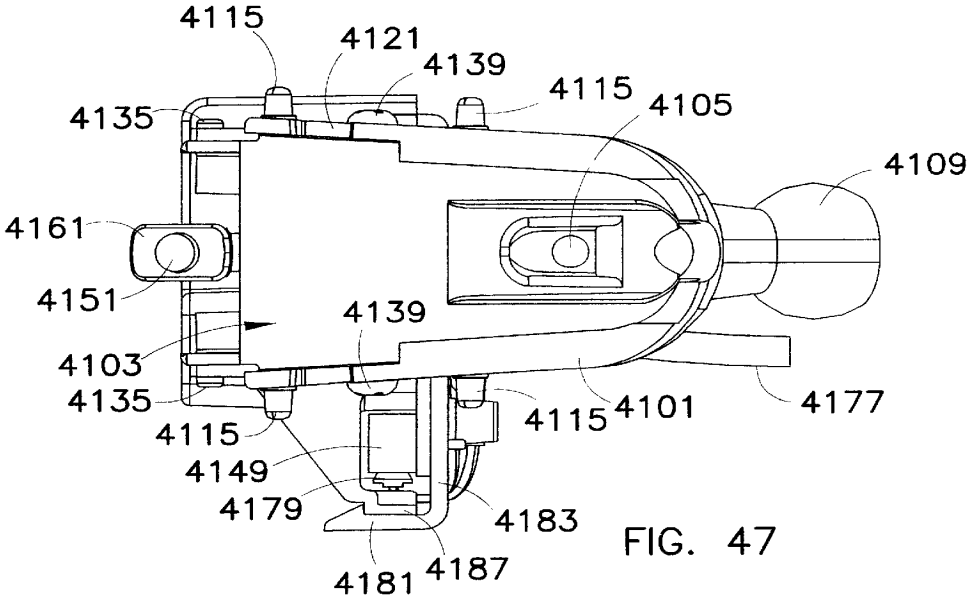
4115
4121
4139
4115
4105
4135
4109
4161
4151
4139
4103
4135
4115
4101
4177
4115
4149
4179
4183
4181
4187

FIG. 47

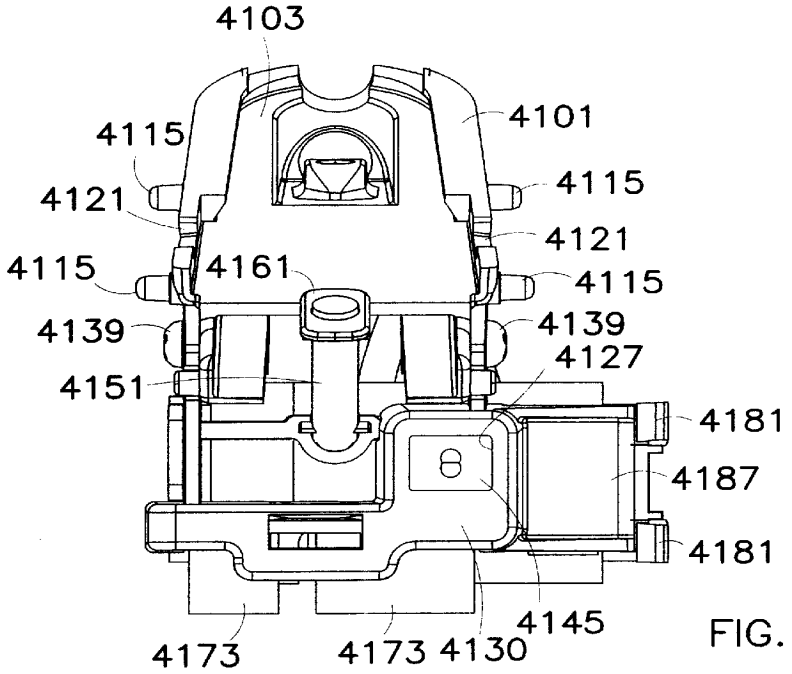
4103
4101
4115
4115
4121
4121
4115
4161
4115
4139
4139
4127
4151
4181
4187
4181
4145
4173
4173
4130

FIG. 48

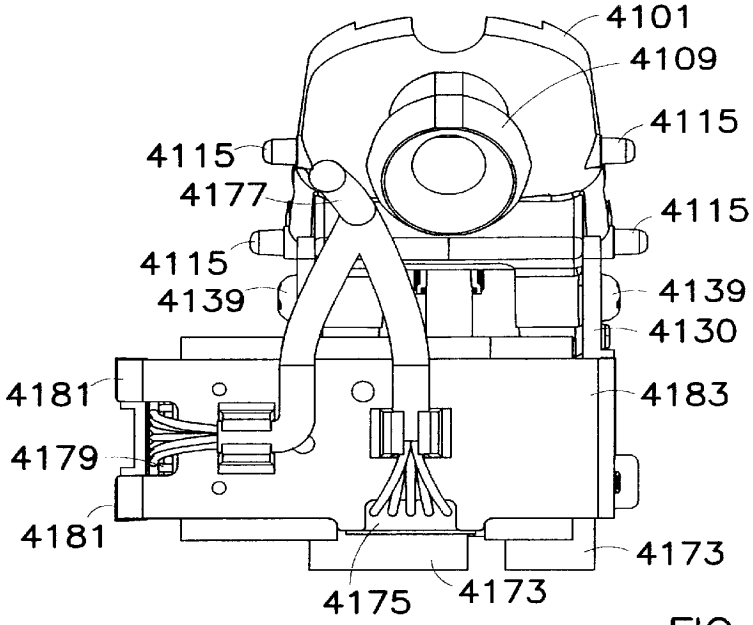
4101
4109
4115
4115
4177
4115
4115
4139
4139
4130
4181
4183
4179
4181
4173
4175
4173

FIG. 49

FIG. 50A

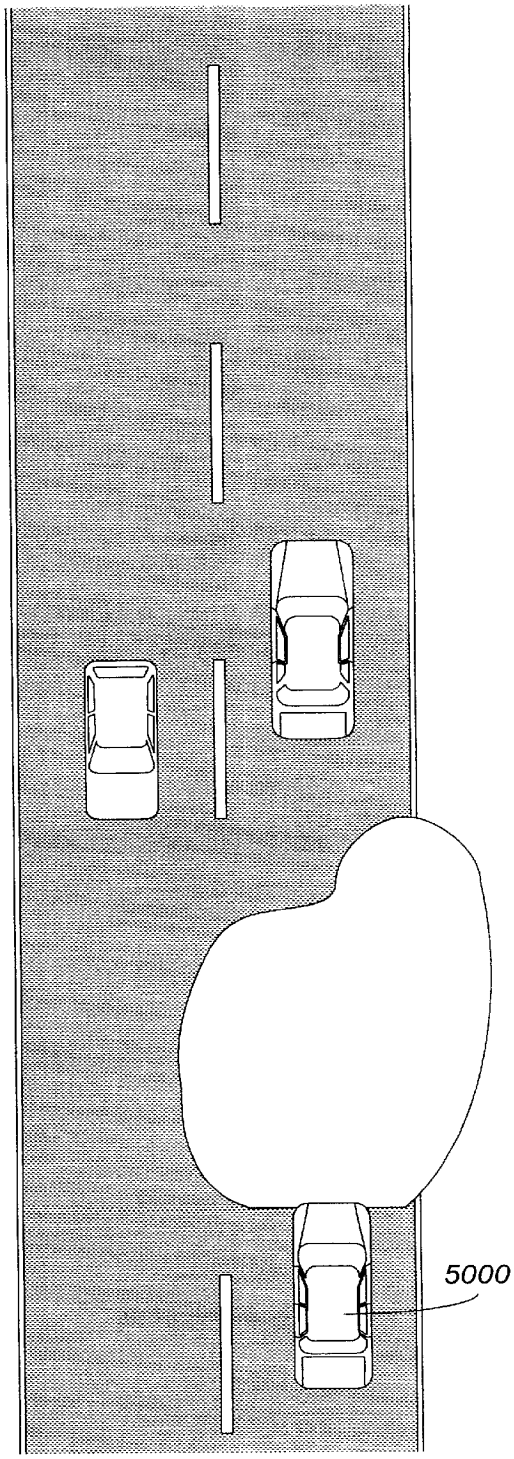

FIG. 50B

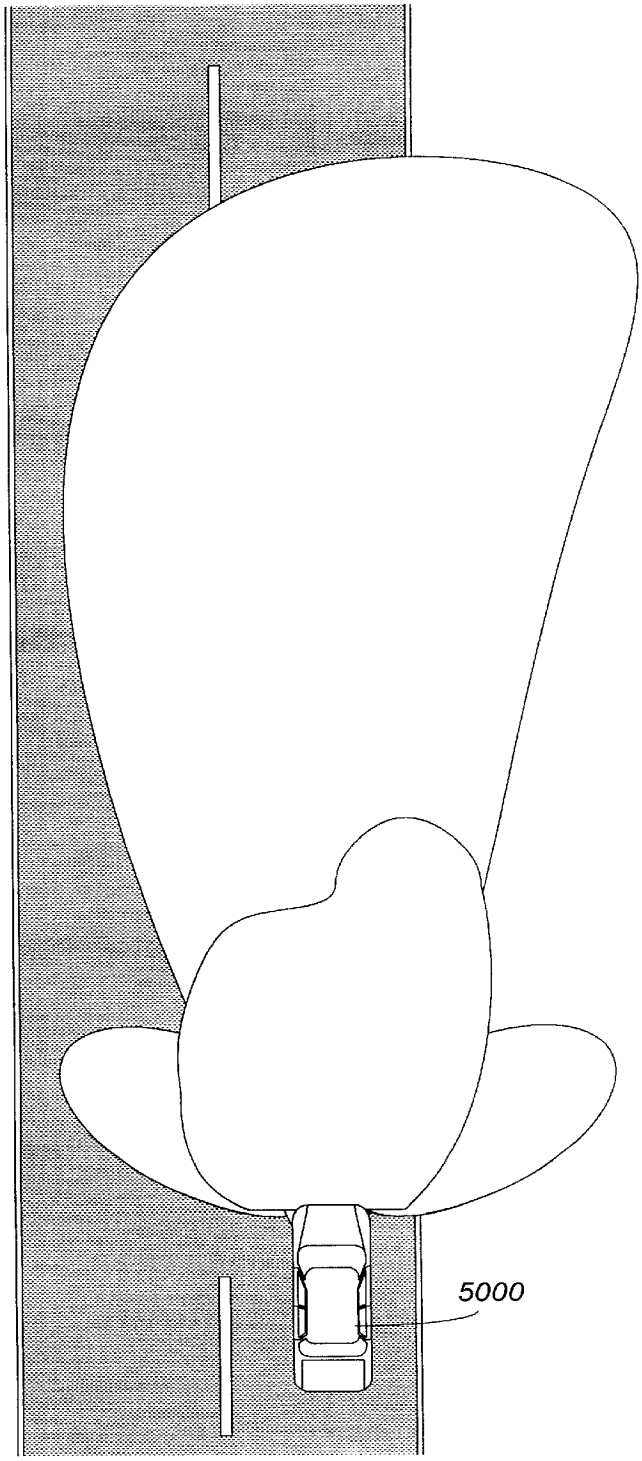

FIG. 50C

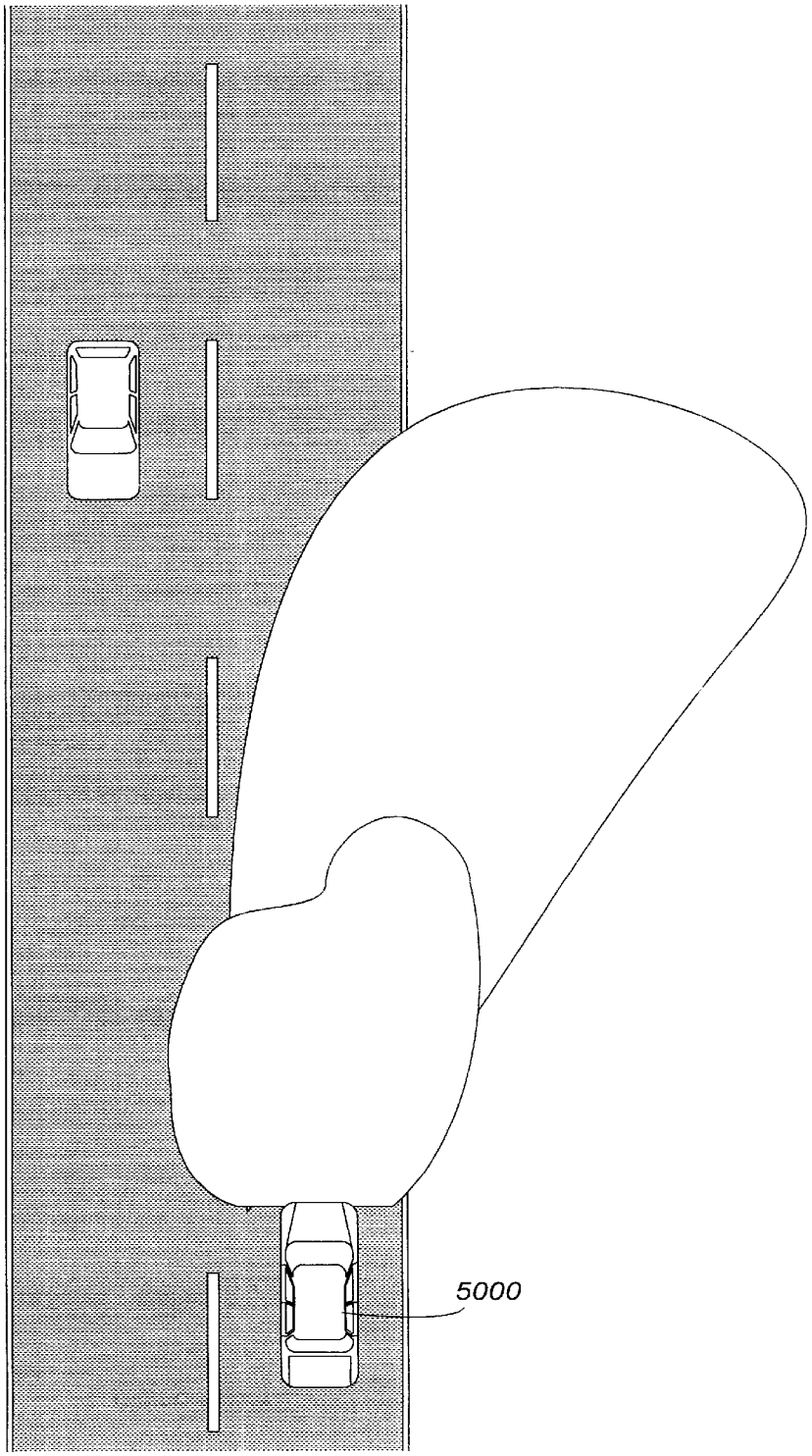

SYSTEM FOR CONTROLLING EXTERIOR VEHICLE LIGHTS

CROSS-REFERENCE TO RELATED APPLICATIONS

This application is a continuation-in-part of U.S. patent application Ser. No. 09/528,389 filed Mar. 20, 2000, entitled IMPROVED VEHICLE LAMP CONTROL by Jon H. Bechtel et al., the entire disclosure of which is incorporated herein by reference.

BACKGROUND OF THE INVENTION

The present invention pertains to control systems for controlling the exterior lights of a vehicle and components that can be used with such a control system.

Modern automotive vehicles include a variety of different lamps to provide illumination under different operating conditions. Headlamps are typically controlled to alternately generate low beams and high beams. Low beams provide less illumination and are used at night to illuminate the forward path when other vehicles are present. High beams output significantly more light and are used to illuminate the vehicle's forward path when other vehicles are not present. Daytime running lights have also begun to experience widespread acceptance. In addition, super bright high beams have been proposed for use on fast rural roads. Foul weather lights, such as fog lights, are also commonly used. Other exterior vehicle lights include tail lights, brake lights center-mounted stop lights (CHMSLs), turn signals, back-up lights, cargo lights, puddle lights, license plate illuminators, etc.

Laws in various countries regulate vehicle illumination, and vehicle manufacturers must build cars that comply with these regulations. For example, regulations set forth by the United States Department of Transportation (DOT) regulate the light emissions of a vehicle's high beam headlamps. Various state regulations are used to control the amount of glare experienced by drivers due to preceding vehicles (other vehicles traveling in the same direction) and oncoming vehicles (vehicles traveling in the opposite direction).

Known vehicle high beam headlamp emissions in accordance with the DOT regulations limit the intensity to 40,000 cd at 0°, 10,000 cd at 3°, 3250 cd at 6°, 1500 cd at 9°, and 750 cd at 12. An example of an emission pattern meeting this regulation is illustrated in FIG. **1** of U.S. Pat. No. 5,837,994, entitled CONTROL SYSTEM TO AUTOMATICALLY DIM VEHICLE HEADLAMPS, issued to Joseph Scott Stam et al. on Nov. 17, 1998, the disclosure of which is incorporated herein by reference. In order to avoid an illuminance of 0.1 foot candles (fc) incident on another vehicle at these angles, the vehicle high beam headlamps should be dimmed within 700 feet of another vehicle if the vehicles are at an angle of 0°, within 350 feet of another vehicle if the vehicles are at a horizontal position of 3°, and 200 feet of the other vehicle if the position of the other vehicle is at an angle of 6° to the longitudinal axis of the controlled vehicle. It can thus be seen that a preceding vehicle directly in front of the controlled vehicle (i.e., at an angle of 0°) will need to be identified well prior to the controlled vehicle catching up to the preceding vehicle, although the distance by which the controlled vehicle's headlamps must be dimmed for a preceding vehicle can be somewhat less than for an oncoming vehicle because glare from behind is usually less disruptive than oncoming glare.

In order to automatically control the vehicle headlamps, various headlamp dimmer control systems have been proposed. In order to prevent drivers of other vehicles from

being subjected to excessive glare levels, an automatic headlamp dimmer system must sense both the headlamps of oncoming vehicles as well as the tail lights of preceding vehicles. Some systems that effectively detect headlamps are unable to adequately detect tail lights. Most prior systems are unable to distinguish nuisance light sources, such as reflectors, street signs, streetlights, house lights, or the like, from light sources that require headlight control. Accordingly, these systems are subject to undesirable dimming of the high beams when no other traffic is present and turning on the high beams when other vehicles are present. In addition to the undesirable performance, it is difficult for prior systems to comply with the legal requirements as described above for high beam control while avoiding unnecessary dimming of the vehicle headlamps.

Fog lights are examples of other vehicle lights that are difficult to control automatically. Vehicles are known to include forward and rearward directed fog lights. In Europe, it is known to provide a very bright red or white light on the back of the vehicle, which is illuminated under foggy conditions. The fog lights must be turned ON as soon as the fog reduces visibility by a predetermined amount and must turn OFF when the fog drops below that density. A reliable method of automatically controlling such fog lights has not been available.

Accordingly, there is a need for a more reliable and intelligent automatic lamp control for a vehicle.

SUMMARY OF THE INVENTION

According to one aspect of the present invention, a control system is provided to control exterior lights of a controlled vehicle. The control system comprises an imaging system configured to image the scene forward of the controlled vehicle, and a control circuit for processing the image of the scene obtained from the imaging system and for controlling the exterior lights to change their beam pattern in response to objects detected in the processed scene, the control circuit disables automatic control of the exterior lights in response to activation of the vehicle windshield wipers.

According to another aspect of the present invention, a control system is provided to control exterior lights of a controlled vehicle. The control system comprises an imaging system configured to image the scene forward of the controlled vehicle, and a control circuit for processing the image of the scene obtained from the imaging system and for controlling the exterior lights to change their beam pattern in response to objects detected in the processed scene, the control circuit disables automatic control of the exterior lights when the vehicle windshield defroster is operating at full speed.

According to another aspect of the present invention, a control system is provided to control exterior lights of a controlled vehicle. The control system comprises an imaging system configured to image the scene forward of the controlled vehicle, and a control circuit for processing the image of the scene obtained from the imaging system and for controlling the exterior lights to change their beam pattern in response to objects detected in the processed scene, the control circuit disables automatic control of the exterior lights when snow is detected.

According to yet another embodiment, a method of detecting snowfall or fog outside a vehicle is accomplished. The method comprises the steps of: sensing light levels forward above the vehicle; comparing the relative brightness of the light levels forward and above the vehicle; and determining that it is snowing or foggy when a ratio of the

relative brightness forward of the vehicle to that above the vehicle reaches a threshold.

According to another aspect of the present invention, a control system is provided to control the headlamps of a vehicle. The control system comprises an ambient light sensor for sensing the ambient light outside of the vehicle, and a control circuit for varying the beam pattern of daytime running lamps in response to the ambient light level sensed by the ambient light sensor.

According to another aspect of the present invention, a control system is provided to control the brightness of the tail lamps of a vehicle. The control system comprises an ambient light sensor for sensing the ambient light outside of the vehicle, and a control circuit for varying the brightness of the tail lamps in response to the ambient light level sensed by the ambient light sensor.

According to yet another aspect of the invention, a headlamp control system is provided for controlling the headlamps of a controlled vehicle that comprises: an imaging system configured to image the scene forward of the controlled vehicle; a control circuit coupled to the imaging system for identifying and determining the brightness of light sources in images obtained from the imaging system and for controlling the headlamps to vary a beam pattern of the headlamps as a function of the brightness of light sources within the images; and a user input mechanism coupled to the control circuit for allowing a user to adjust a sensitivity at which the control circuit will control the headlamps in response to light sources within the images.

According to yet another aspect of the invention, a headlamp control system is provided for controlling the headlamps of a controlled vehicle that comprises an imaging system configured to image the scene forward of the controlled vehicle and to detect an ambient light level outside the vehicle, and a control circuit coupled to the imaging system for determining an ambient light level outside the vehicle, for identifying and determining the brightness of light sources in images obtained from the imaging system, and for controlling the headlamps to vary a beam pattern of the headlamps as a function of the brightness of light sources within the images when the ambient light level is above a threshold level.

According to another aspect of the present invention, a control system is provided to control exterior lights of a vehicle. The control system comprises an image array sensor including a plurality of pixels, an optical system configured to image the scene forward of the controlled vehicle onto the image array sensor, the optical system including a forwardmost surface, and a control circuit for processing the image of the scene obtained from the image array sensor and for controlling the exterior lights in response to objects detected in the processed scene, wherein the optical system includes a hydrophilic coating on the forwardmost surface.

According to yet another aspect of the present invention, a vehicle control system is provided to control the brightness of continuously variable headlamps that have a brightness that varies continuously between a high beam state and a low beam state. The control system comprises an imaging system configured to image the scene forward of the controlled vehicle, a control circuit for identifying and determining the brightness of light sources in images obtained from the imaging system and for controlling the brightness of the headlamps as a function of the brightness of light sources within the images, and an indicator coupled to the control circuit and positioned inside the vehicle for indicating to the driver the relative brightness of the headlamps.

According to another aspect of the invention, an imaging system for a vehicle is provided that comprises an image sensor having an array of pixels and at least one other component, and an optical baffle disposed between the images sensor and a scene to be imaged for preventing light from the scene from reaching the at least one other component.

According to a further aspect of the invention, a headlamp control system for a vehicle is provided that comprises an imaging system configured to image the scene forward of the controlled vehicle, a switching mechanism for manual input of a driver's selection of a feature affecting the control of the vehicle headlamps, and a control circuit coupled to the switching mechanism and the imaging system for identifying and determining the brightness of light sources in images obtained from the imaging system and for controlling the brightness of the headlamps as a function of the brightness of light sources within the images and as a function of the status of the switching mechanism.

Another aspect of the present invention is to provide a headlamp control system for a vehicle that comprises a control circuit coupled to the vehicle headlamps for fading the headlamps of the vehicle to an off state in response to the turning off of the vehicle ignition or exiting the vehicle.

According to another aspect of the invention, a control system is provided to control exterior lights of a vehicle. The control system comprises an image array sensor including a plurality of pixels, an optical system configured to image the scene forward of the controlled vehicle onto the image array sensor, the optical system including a forwardmost surface, and a control circuit for processing the image of the scene obtained from the image array sensor and for controlling the exterior lights in response to objects detected in the processed scene, the optical system includes a photocatalytic coating on the forwardmost surface.

Another aspect of the present invention is to provide a control system to control the headlamps of a vehicle. The control system comprises a manually actuated switch mechanism for receiving input from a driver to temporarily increase the brightness of the vehicle headlamps in a flash-to-pass state, an ambient light sensor for sensing the ambient light outside the vehicle, and a control circuit coupled to the ambient light sensor and the manually actuated switch mechanism for varying the beam pattern of the headlamps during the flash-to-pass state in response to the ambient light level sensed by the ambient light sensor.

According to yet another aspect of the present invention, a control system is provided to control the headlamps of a vehicle where the vehicle has a microwave receiver for receiving signals from satellites. The control system comprises a control circuit for receiving signals from the microwave receiver indicative of the location of the vehicle, the control circuit controls the headlamps to limit the perceived brightness of the headlamps from exceeding a predetermined level less than their capacity when the vehicle is travelling on a residential street.

These and other features, advantages, and objects of the present invention will be further understood and appreciated by those skilled in the art by reference to the following specification, claims, and appended drawings.

BRIEF DESCRIPTION OF THE DRAWINGS

The subject matter that is regarded as the invention is particularly pointed out and distinctly claimed in the claim portion that concludes the specification. The invention, together with further objects and advantages thereof, may

best be understood by reference to the following description taken in conjunction with the accompanying drawings, where like numerals represent like components, and in which:

FIG. **1** illustrates vehicles traveling on a common road;

FIGS. **2***a* and **2***b* illustrate an optical sensor system, FIG. **2***b* showing a perspective view and FIG. **2***a* showing a cross section of the optical sensor system taken along plane **2***a*—**2***a* in FIG. **2***b;*

FIG. **3** is a plan view illustrating an image sensor used in the optical sensor system according to FIGS. **2***a* and **2***b;*

FIG. **4** is a top plan view illustrating a lens structure used in the optical sensor system according to FIGS. **2***a* and **2***b;*

FIG. **5** is a side elevation view illustrating the lens structure according to FIG. **4**;

FIG. **6** is a graph illustrating wave transmissivity as a function of light wavelength for the lens;

FIG. **7** shows a light sensitive surface of the image sensor and illustrates the regions of the image array which are impacted by the light from each of the lenses;

FIG. **8** is a cross section illustrating another image sensor assembly taken along the same plane as the assembly in FIG. **2***a;*

FIG. **9** is a cross section illustrating yet another light sensor assembly taken along the same plane as the assembly in FIG. **2***a;*

FIG. **10** is a partial cross section of a rearview mirror assembly illustrating an optical sensor system;

FIG. **11** is a circuit schematic illustrating a circuit for an optical sensor system and an electrochromic mirror;

FIG. **12** is a circuit schematic illustrating a headlamp drive for the circuit according to FIG. **11**;

FIG. **13** is a circuit schematic illustrating a microcontroller circuit for the circuit according FIG. **11**;

FIG. **14** is a flow chart illustrating operation of an electrochromic mirror and headlamp control;

FIG. **15** is a flow chart illustrating operations to acquire and analyze an image;

FIG. **16** is a flow chart illustrating operations to analyze an image and find a light source;

FIGS. **17***a* and **17***b* are a flow chart illustrating a seed fill algorithm;

FIG. **17***c* illustrates a pixel array impacted by a light source;

FIG. **18** is a flow chart illustrating operation to determine if light sources are oncoming or preceding vehicles;

FIG. **19** is a state diagram illustrating the duty cycle associated with states for a variable high beam lamp;

FIGS. **20***a* and **20***b* illustrate operation rules for changes of state in FIG. **19**;

FIG. **21** is a flow chart illustrating operation to provide speed varying thresholds;

FIG. **22** is a chart illustrating the different regions of the image array;

FIG. **23** is a flow chart illustrating operation of the microcontroller to shift the regions in FIG. **22**;

FIG. **24** is a front perspective view illustrating an image sensor assembly including an electronically alterable filter;

FIG. **25** is a side elevation view of the liquid crystal filter in the image sensor assembly according to FIG. **24**;

FIG. **26***a* is an exploded perspective view illustrating an LED headlamp;

FIG. **26***b* is a fragmentary cross section taken along plane **26***b*—**26***b* in FIG. **26***a;*

FIG. **26***c* is a front plan view illustrating an alternate embodiment of an LED lamp;

FIG. **26***d* is a fragmentary cross section taken along plane **26***d*—**26***d* in FIG. **26***c;*

FIG. **27** is a top, front perspective view of an LED headlamp for projecting light in more than one horizontal direction;

FIG. **28** is a top, front perspective view of an LED headlamp for projecting light in more than one vertical direction;

FIGS. **29***a*–**29***d* illustrates a method of manufacturing surface mounted filters for an image sensor;

FIG. **30** is a chart illustrating the wavelengths passed by a red filter surface mounted to an image sensor;

FIG. **31** is a chart illustrating the wavelengths passed by a cyan filter surface mounted to an image sensor;

FIG. **32** illustrates another image sensor assembly;

FIG. **33** illustrates an electrical system including a wave sensitive headlamp control;

FIG. **34** is a circuit schematic illustrating an alternative circuit for an optical sensor system and an electrochromic mirror;

FIG. **35** is a state diagram illustrating a first control scheme for manually or automatically controlling the vehicle headlamps in response to activation of various manual switches;

FIG. **36** is a state diagram illustrating a second control scheme for manually or automatically controlling the vehicle headlamps in response to activation of various manual switches;

FIG. **37** is a state diagram illustrating a third control scheme for manually or automatically controlling the vehicle headlamps in response to activation of various manual switches;

FIG. **38** illustrates an exemplary indicator for use with the headlamp control system of the present invention;

FIG. **39** is a representative pictorial view of an imaged scene taken in several superimposed frames;

FIG. **40** is a functional block diagram of one embodiment of the present invention;

FIG. **41** is front elevational view of a mirror mount accessory housing according to another embodiment of the present invention;

FIG. **42** is top plan view of the mirror mount accessory housing shown in FIG. **41**; FIG. **43** is a cross-sectional view of the mirror mount accessory housing shown in FIGS. **41** and **42** taken along line **43**–**43'** in FIG. **42**;

FIG. **44** is an exploded perspective view of the mirror mount accessory housing;

FIG. **45** is rear elevational view of the mirror mount accessory housing;

FIG. **46** is a side elevational view of the mirror mount accessory housing with the housing cover removed;

FIG. **47** is a top plan view of the mirror mount accessory housing with the housing cover removed;

FIG. **48** is a front elevational view of the mirror mount accessory housing with the housing cover removed;

FIG. **49** is a rear elevational view of the mirror mount accessory housing with the housing cover removed; and

FIGS. **50**A–**50**C are pictorial representations of various illumination patterns produced by exterior lights of a vehicle.

DETAILED DESCRIPTION OF THE INVENTION

The present invention generally pertains to a control system for controlling the exterior lights of a vehicle. As noted above, such exterior lights may include headlamps, tail lights, foul weather lights such as fog lights, brake lights, center-mounted stop lights (CHMSLs), turn signals, back-up lights, cargo lights, puddle lights, license plate illuminators, etc. The headlamps may be operated in several different modes including conventional low-beam and high-beam states. They may also be operated as daytime running lights, and additionally as super-bright high beams in those countries where they are permitted. The headlamp brightness may also be continuously varied between the low, high, and super-high states. Separate lights may be provided for obtaining each of these headlamp states or the actual brightness of the headlamps may be varied to provide these different headlamp states. In either case, the "perceived brightness" of the headlamps-is varied. As used herein, the term "perceived brightness" means the brightness of the headlamps as perceived by an observer outside the vehicle. Most typically, such observers will be drivers or passengers in a preceding vehicle or in a vehicle traveling along the same street in the opposite direction. Ideally, the exterior lights are controlled such that if an observer is located in a vehicle within a "glare area" relative to the vehicle (i.e., the area in which the observer would perceive the brightness of the exterior lights as causing excessive glare), the beam illumination pattern is varied such that the observer is no longer in the glare area. The perceived brightness and/or glare area of the headlamps (and/or other exterior lights) may be varied by changing the illumination output of one or more lights forming the headlamps, by steering one or more lights to change the aim of one or more of the lights forming the headlamps, activating or deactivating some or all of the lights, altering the illumination pattern forward of the vehicle, or a combination of the above. FIG. **50**A shows a typical low beam pattern as would be used when other vehicles are nearby and forward of the controlled vehicle **5000**. FIG. **50**B shows an examplary composite beam pattern including both high and low beam patterns and side bending light patterns, which may be individually activated as the vehicle **5000** approaches a turn. FIG. **50**C illustrates another composite beam pattern including a low beam pattern and an intermediate, side-aimed pattern, which may be produced by changing the focus or aim of the high beams as well as the brightness of the high beams. The composite beam pattern shown in FIG. **50**C is useful when another vehicle is approaching in an oncoming and adjacent lane. As will be apparent to those skilled in the art, a large number of other beam patterns can be achieved using known headlamp mechanisms. Other mechanisms for adjusting the perceived brightness and glare area of the headlamps will also be apparent to those skilled in the art.

Although the present invention primarily addresses the control of the vehicle headlamps, embodiments are described below for controlling the tail lights and foul weather lights. In some embodiments, the present invention is generally described as controlling the "exterior lights," which broadly includes any exterior lighting on the vehicle. For example, the present invention may be used in some circumstances to control the perceived brightness of a turn signal mounted in an outside rearview mirror assembly so as to provide sufficient light output for signaling a driver in another vehicle without causing excessive glare in the eyes of the driver of the vehicle having the signal mirrors. Also, the present invention may be employed to control the instrument panel lights as well as other interior display lights based upon the sensed ambient light. Other examples will be apparent to those skilled in the art.

A controlled vehicle **100** (FIG. **1**) having an automatic headlamp dimmer includes an optical sensor system **102** for detecting the headlamps **104** of an oncoming vehicle **105** and the tail lights **108** of a preceding vehicle **110**. The headlamps **111** of the controlled vehicle **100** are controlled automatically to avoid shining the high beams, or bright lights, directly into the eyes of a driver of oncoming vehicle **105** or by reflection into the eyes of the driver of the preceding vehicle **110**. The optical sensor assembly **102** is illustrated mounted in the windshield area of the vehicle, but those skilled in the art will recognize that the sensor could be mounted at other locations that provide the sensor with a view of the scene in front of the vehicle. One particularly advantageous mounting location is high on the vehicle windshield to provide a clear view, which view can be achieved by mounting the optical sensor assembly **102** in a rearview mirror mount, a vehicle headliner, a visor, or in an overhead console. Other views that may be advantageously employed include mounting the optical sensor assembly **102** on the A-pilar, the dashboard, or at any other location providing a forward viewing area. However, the most advantageous mounting locations are those that position the image sensor to view a forward scene through an area kept clean by the vehicle's windshield wipers.

With reference to FIGS. **2***a* and **2***b*, the optical sensor assembly **102** includes an electronic image sensor **201** and an optical system to direct light onto the image sensor **201**. The image sensor **201** generally comprises an array of light sensitive components and associated circuitry to output electronic pixel light level signals responsive to light impacting on the surface of the image sensor **201**. The optical system generally contains four components: lens structure **202**; aperture stop member **203**; far field baffle **204**; and optional infrared filter **206**. The optical system controls the scene viewed by the image sensor **201**. In particular, the optical system focuses light rays **205** passing through opening **207** of the far field baffle onto the array **201** contained within the image sensor assembly **201**.

THE IMAGE SENSOR

The configuration of the image sensor **201** is illustrated in FIG. **3**. The image sensor includes an image array **301** (FIG. **3**) that can be made from any one of a variety of sensors, such as CMOS image sensors, charge coupled device (CCD) image sensors, or any other suitable image sensor. In one embodiment, the image sensor is a CMOS photogate active pixel image sensor. A CMOS photogate active pixel image sensor is described in U.S. Pat. No. 5,471,515, entitled ACTIVE PIXEL SENSOR WITH INTER-PIXEL CHARGE TRANSFER, issued to Eric R. Fossum et al., on Nov. 28, 1995, the disclosure of which is incorporated herein by reference thereto. Sensor systems including arrays are disclosed in U.S. patent application Ser. No. 09/448,364, entitled CONTROL CIRCUIT FOR IMAGE SENSORS, filed Nov. 23,1999, by Jon Bechtel et al.; U.S. patent application Ser. No. 08/933,210, entitled CONTROL CIRCUIT FOR IMAGE SENSORS, filed on Sep. 16, 1997, by Jon Bechtel et al., now U.S. Pat. No. 5,990,469; and U.S. patent application Ser. No. 08/831,232, filed Apr. 2, 1997, entitled CONTROL SYSTEM TO AUTOMATICALLY DIM VEHICLE HEADLAMPS, by Joseph Stam et al., now U.S. Pat. No. 5,837,994, the disclosures of this application and patents are incorporated herein by reference thereto.

The array **301** may for example comprise photogate active pixels, such as 10 to 50 μm pixels. It is advantageous for the

array to be a low resolution array, which is an array that has a resolution of less than 7000 pixels per square millimeter and more preferably less than 2500 pixels per square millimeter. The array may have 25 μm or larger photogate active pixels. In particular, the array may include 30 μm or larger pixels arranged in a grid smaller than 200 rows by 200 columns, and may advantageously comprise a rectangular array having 64 columns and 80 rows of pixels. Such an image sensor is described in detail in U.S. Pat. No. 5,471,515 incorporated herein above by reference thereto. The optically active region of array **301** is approximately 1.9 mm in the X direction by 2.4 mm in the Y direction. Using such a low resolution image sensor array to monitor the forward field of the controlled vehicle **100** results in a relatively low resolution sensor system that can be supported by high speed processing in a cost effective manner while enabling a vehicle headlamp control to be highly reliable and accurate. The low resolution array reduces the memory and processor requirements of associated circuitry. The use of such larger pixels increases sensitivity and thus allows the use of slower, and thus lower cost, optics. However, one skilled in the art will recognize that the use of a higher resolution array with smaller pixels may be advantageous to reduce the area of the sensor array and thus potentially reduce the cost at the array itself. In the case where a high resolution image sensor is employed, faster components and higher quality optics may be required to accommodate the high resolution image sensor. With advances in optical manufacturing, such optics may become cost effective such that use of a higher resolution array becomes economically practical. Additionally, it is expected that in future years the cost of a processor and memory required to process an image containing more pixels will be reduced making a higher resolution system feasible. A higher resolution array may improve the ability to detect distant tail lamps. However, at this time it is preferred to use a low resolution array with relatively few pixels to maintain the economy of the invention and thus enable widespread acceptance in the market place.

An image sensor and control circuit therefore will be described in greater detail herein below, and such a system is disclosed in U.S. Pat. No. 5,990,469, the disclosure of which is incorporated herein above by reference.

In addition to the array **301**, the image sensor **201** includes: serial timing and control circuit **309**; column output circuit **302**; bias generating digital-to-analog converters (DACs) **305**; flash analog-to-digital converters (ADCs) **304**; and analog amplifier **303**. Serial timing and control circuitry **309** provides a high-speed synchronous bi-directional interface between a microcontroller **1105** (FIG. **11**) and the image sensor **201**. As described in U.S. Pat. No. 5,990,469, the control circuit **309** allows the microcontroller **1105** to output parameters that control the selection of pixels exposed for measurement (i.e., selects the area of array **301** exposed; which area is referred to herein as the "window"); exposure time which affects sensitivity; bias voltages generated by the bias voltage generation DACs **305**; and the analog gain of amplifier **303**. Additional features include the ability to expose two windows simultaneously, using the same or different gain settings for the amplifier **303** for pixels of the respective windows, and the ability to acquire a sequence of multiple frames. The control circuit **309** also enables a sleep feature that disables the analog components of the image sensor assembly **201** to reduce power consumption when the image sensor is not in use. The image sensor also includes: a power supply input Vdd; a ground input; serial data bus input/output (I/O) **308**; serial data clock I/O **311**; slave select input **307**; and clock input **306**.

The Lens Structure

Lens structure **202** (FIG. **2***a*) includes lenses **208** and **209**. Although two lenses are disclosed, the image sensor **201** could use a single lens or more than two lenses. The two lenses **208**,**209** are used to produce two different images of the same scene through different color filters to assist in properly discriminating headlamps from tail lamps using the image sensor **201** as described below and in U.S. Pat. Nos. 5,837,994 and 5,990,469, the disclosures of which are incorporated herein above by reference. The image system allows the acquisition of an image of a scene through at least one color filter **208**, **209**. In one embodiment, the lens structure is constructed to image the forward scene onto one region of the image array **301** through a first color filter and to image the forward scene onto another region of the image array through a second filter. For example, filter **209** (FIGS. **2***a* and **2***b*) may be a red filter and filter **208** may be either a blue filter, a green filter, a cyan filter, a clear filter (which is for example the absence of a color filter), or any other suitable filter. There are various places within the optical system that the filters could be incorporated other than the lens **208**, **209**, such as on the image sensor surface. However, incorporating the filters into the lens structure has the advantage that the light is not focused at the point of the filter. Locating the filter in the image plane, i.e., on the sensor, would leave an organic filter susceptible to thermal damage should the sun fall within the sensor's field of view such that the sun's rays are focused on the filters. Typically, filter materials are much more vulnerable to thermal damage than the image sensor itself. A possible exception would be dichroic interference filters, which are highly resistant to thermal damage. A method by which such thermal resistant filters can be deposited onto a semiconductor image sensor surface is described in greater detail herein below with respect to an alternate embodiment of the present invention.

An example of a filter that could be incorporated on the image sensor surface is a dichroic filter array of the type disclosed in U.S. Pat. No. 5,711,889 to Philip E. Buchsbaum, the entire disclosure of which is incorporated herein by reference. The dichroic filter array disclosed in this U.S. patent is resistant to thermal damage and therefore would be suitable for use in an image sensor used for detecting light sources in the control of a vehicle's headlamps. Such a dichroic filter array may include a checkerboard or mosaic pattern may be deposited on to the array such that neighboring pixels are exposed to separate bands of light. A technique for depositing interference filters of different colors onto neighboring pixels is disclosed in the above-referenced U.S. Pat. No. 5,711,889. In one embodiment, neighboring pixels are alternatively coated with a red filter (R) and no filter (clear (C)) as illustrated in the table below.

R	C	R	C
C	R	C	R
R	C	R	C
C	R	C	R

In this embodiment, the optics do not include the lens structure and color filters discussed above, since the color filtering function is performed by the filter pattern. Likewise, the optics do not need to separately image the forward scene onto two portions of the image sensor. Thus, the twice as much of the image sensor array may be used to image a single image of the forward scene. It should be noted

however, that in accordance with yet another embodiment of the present invention, the optics may still image the forward scene onto two separate portions of the image sensor array as discussed above, but instead of incorporating the color filter into the lens, the color filter may be provided as a patterned or non-patterned multi-layer interference filter on the sensor.

The optics in this embodiment are slightly defocused such that the spot size from a distant point light source covers at least two pixels. In this way, an accurate reading of the red component of the object can be determined. The inventors have discovered that common color filter array technologies, typically employing polymer filters, will not withstand direct focused sunlight. In many automotive applications, the sun may be focused onto the array if a vehicle is traveling or parked such that the sun is within the field of view of the camera. Interference filters are far more robust and reflect the unwanted spectral bands of light rather than absorb them. As a result, their use overcomes the limitations of the prior filtering technologies and allows the construction of an automotive camera. These filters can be used not only with cameras which are used in applications which control vehicle equipment, but also in applications where images are acquired and displayed to the driver for visual assistance.

In another embodiment, three-color interference filters can be used to construct a red, green, and blue (RGB) pixel array (or their complements) as illustrated in the table below.

G	R	G	R
B	G	B	G
G	R	G	R
B	G	B	G

A full color value for each pixel is determined by using the color of the current pixel and interpolating the other two colors from neighboring pixels with different filter colors. Techniques for performing this interpolation are well known in the art. In a simpler scheme, groups of four pixels are treated as one "super pixel." The lens is defocused enough such that the image of a point light source is blurred over a 2×2 block of pixels. For each block of 2×2 pixels, the red, green, and blue color components are determined from the individual pixels. This data can be represented either as three separate values or as an intensity and color value.

The use of a 2×2 super pixel simplifies processing and reduces the total number of values stored. This technique can be combined with any of the other techniques in an application requiring color imaging. For an application such as a high beam headlamp control system, traditional color interpolation can be used near the center of the image for increased resolution and the technique of using super pixels can be used away from center. Super pixels larger than 2×2 blocks can be used where substantially decreased resolution is acceptable.

The lens structure **202** will now be described in greater detail with reference to FIGS. **2***a*, **4**, **5**, and **7**. The lens structure **202** includes a first lens **208** and a second lens **209** that focus light from other vehicles onto the image array **301** (FIG. **7**). The two lens elements **208**, **209** image the forward scene onto different respective regions **702**, **703** of the image sensor image array **301**. Each lens element **208**, **209** contains a spectral band pass filter, such that the forward image scene projected onto the respective regions of the image array **301** each represents a different color component of the image, where it is advantageous to determine the relative color of objects in the field of view. It is particularly advantageous for the lens elements **208** (FIG. **2***a*) and **209** to comprise cyan and red filters, respectively, as mentioned above and shown in FIGS. **4** and **5**. Alternatively, it may be advantageous for lens **209** to contain a red spectral filter and for lens **208** to be clear.

The sensor system may for example employ lens elements **208** and **209** that are 0.5 mm to 2.5 mm in diameter, and may advantageously comprise lenses that are 1.0 to 2.5 mm in diameter, such as being 2.2 mm in diameter. In the Y direction, the lens center axes C_1 and C_2 may be spaced by 0.6 to 1.6 mm, and may for example be spaced by 1.1 to 1.4 mm, and may advantageously be spaced 1.3 mm in the Y direction (as indicated in FIG. **5**). A portion of the lens may be truncated on one side to achieve this spacing. The lens center C_1, C_2 may be aligned in the X direction as shown in FIG. **4**, or be offset. Lens element **208** may for example include a cyan filter with an aspheric lens having a curvature of 0.446 mm^{-1} and a conic constant of −0.5 to achieve the desired focal length. Lens element **209** may in contrast, be a red filter, aspheric lens with a curvature of 0.450 mm^{-1} and a conic constant of −0.5 to achieve the same desired focal length. At the center, each lens is 0.5 to 1.5 mm thick, and may The difference in curvature of the two lenses compensates for the dispers and optimizes each lens for the spectral band passed by the filter. These parameters result in a lens with an effective focal length of 4.5 mm and thus have an F# of 2. It will be recognized that these optics are exemplary, and that other optics could be provided, such that the focal length and F# could be different.

The lens structure **202** may be molded out of a light-transmissive plastic such as acrylic, manufactured from glass, or may be produced by any other suitable construction. Where the lenses **208**, **209** are molded from plastic, the filters may be formed integrally with the plastic by the inclusion of dyes within the material or they may be molded of a clear transparent material, particularly where the image sensor has a surface mounted filter as described herein below. An example of an acrylic material, which includes a red filter dye, is part number RD-130 available form OptiColor, Inc. of Huntington Beach, Calif., USA. An acrylic material incorporating a cyan filter is OptiColor part number BL-152. The spectral transmission of these two materials is shown in FIG. **6**. Using the optional infrared filter **206** will remove light with wavelengths greater than approximately 700 nm.

The lens structure **202** including integral filters may be manufactured using a bi-color injection molding process. First one-half of the lens, for example the red half including lens **209**, is molded in a tool containing features to form the red half of the lens. Next, the molded red half of the lens is inserted into a tool containing features for the cyan half of the lens structure **202** in addition to features to hold the red lens **209**. The cyan lens **208** half of the lens structure **202** is then injection molded against the red lens **209** half forming one bi-color lens. Alternatively, each of the lenses **208** and **209** can be provided by lens elements such as disclosed in copending U.S. Pat. No. 6,130,421, entitled IMAGING SYSTEM FOR VEHICLE HEADLAMP CONTROL, filed Jun. 9, 1998, by Jon H. Bechtel et al., the disclosure of which is incorporated herein by reference thereto.

While red and cyan filtered lens elements are used in the illustrated embodiment, other combinations of lenses may also be suitable for this application. For example, it is possible to replace cyan lens element **208** with a clear lens. Also, it is possible to use three lenses with respective color filters, and in particular red, green, and blue filters, to obtain

a full color image. Such an arrangement could use a sequence of three lenses aligned along the Y axis of FIG. **4**, with one lens positioned on the center axis and the other two lenses positioned adjacent this center lens. The spacing of the lenses might advantageously be uniform to provide uniformly spaced regions on the light sensitive surface of the image array **301**. The red and cyan filter colors described above are thus only presented herein as an example, and any combination of filters which pass at least two isolated or overlapping spectral bands of light and allow for the distinction of tail lamps from headlamps may be used. Those skilled in the art will recognize that other methods can be used to incorporate the filters, such as screen printing dyes applied to the flat back surface of the lens structure **202**, or application of a filter material to the surface of a clear lens structure. Additionally, an advantageous system using a single lens is described herein below with reference to FIGS. **24** and **25**.

The Aperture Stop

Aperture stop **203** comprises an opaque member, including apertures **240** (FIG. **2***a*) and **242**, positioned over lenses **208**, **209**. The aperture stop **203** can be manufactured of any suitable material, such as molded plastic, and it can be painted or otherwise treated so as to block the passage of light if the material of which the plastic is manufactured is not opaque. Aperture stop **203** defines the apertures **240**, **242** for lens elements **208** and **209**. Aperture stop **203** also prevents passage of stray light through regions of lens structure **202** other than the lens elements **208** and **209**. It will be recognized that the aperture stop **203** can be paint applied directly to the surface of lens structure **202**, and optionally to the sidewalls of light sensor assembly **250**, such that the paint blocks passage of stray light through regions of lens **202** other than the lens elements **208** and **209**. The aperture stop may also be stamped from a rigid material such as Mylar and placed over the lens structure. Such an aperture stop may include a pair of registration holes for engaging posts extending from the lens structure such that the aperture stop may be properly positioned relative to the lens structure with the apertures **240**, **242** aligned with the corresponding lens elements **208**, **209** of lens structure **202**.

The aperture stop and/or the window may define a transparent window in an otherwise opaque mask in which the transition from the opaque region to the transparent region may be graded. By providing such a gradient, spatial thresholding of the received and processed image may be readily accomplished. The purpose for such spatial thresholding is discussed in more detail below.

The Far Field Baffle

The far field baffle **204** (FIGS. **2***a* and **2***b*) is an opaque enclosure to be positioned over the image sensor **201**. The baffle includes an opening **207**, which is the sole light passage into the image sensor. The illustrated far field baffle **204** is a generally rectangular box including four sidewalls **215** (only two of the four being visible in FIG. **2***b*), an end wall **217** including opening **207**, and an open end **219**. The open end is secured to the support **220** on which image sensor **201** is carried. The support **220** may be, for example, a circuit board or housing, and is preferably opaque to block the passage of light into the chamber defined by the far field baffle. The walls **215**, **217** of the far field baffle **204** are opaque, and may be of any suitable construction such as stamped from metal, molded from plastic, or the like. If the material from which the walls are made is not opaque, it may be painted or otherwise treated to block the admission of light. The far field baffle defines the forward scene viewed by image sensor array **208**. The side walls **215** and end wall **217** prevent light at angles outside of the desired field of view from entering and are also used to keep light input through one lens from crossing over to the region of the array reserved for the other lens. The far field baffle aperture **207** is ideally about 4–6 focal lengths, or approximately 18 mm in the illustrated embodiment, from the front of the lens (for the sake of clarity, the figures of the application are not to scale). The field of view through aperture **207**, aperture stop **203**, and lenses **208** and **209**, in the illustrated embodiment, is about 10° in the vertical direction and 25° in the horizontal direction in front of the vehicle. This field of view can be achieved with a rectangular or elliptical far field baffle opening **207** that is 6 to 7 mm in the Y direction and 9 to 10 mm in the X direction, in the above described embodiment.

In particular the far field baffle **204** has an opening **207** in an end wall **217**. The sidewalls **215** of the image array sensor extend orthogonally from the end wall **217**. The walls **215**, **217** may be formed integrally in a molding or stamping process or they may be joined after construction using an adhesive, fasteners or the like. The far field baffle is preferably a black plastic molded member, although it may be provided using any material that will absorb most or all of the light striking the sidewalls. By providing wall surfaces on the inside of the far field baffle that absorb light, the walls will not reflect light that enters though opening **207** onto the image array sensor **201**. In the illustrated embodiment, the baffle is rectangular, but those skilled in the art will recognize that the baffle could be square, cylindrical, or any other suitable shape. An imaging system including a far field baffle is described in co-pending U.S. Pat. No. 6,130,421, entitled IMAGING SYSTEM FOR VEHICLE HEADLAMP CONTROL, filed on Jun. 9, 1998, by Jon H. Bechtel et al, the disclosure of which is incorporated herein by reference thereto.

Far field baffle **204** and aperture stop **203** preferably configured to prevent light from reaching components other than image sensor array **201** that may be mounted on circuit board **221**. Certain sensors, such as CMOS sensors, often include other components besides the image sensor array on the printed circuit board that may be damaged from exposure to light. Additional baffle structures may be incorporated for this purpose.

Infrared Filter

The far field baffle holds an optional infrared filter **206** (FIG. **2***a*). Infrared filter **206** prevents light of wavelengths longer than about 700 nm from being imaged by the optical system. This is advantageous as light above 700 nm (FIG. **6**) will pass through the red and cyan filters. By removing this light, the only light that will be considered is visible light in the pass band of the red and blue filters. The infrared filter has become more important due to the recent commercialization of LED tail lamps. Because incandescent light sources emit infrared light while LED light sources do not, the infrared filter is desirable to balance out the detected brightness of these two types of light sources.

Infrared filters are available from Optical Coating Laboratories of Santa Rosa, Calif., and are called Wide Band Hot Mirrors. The infrared filter **206** may be mounted to the end wall **217** using an adhesive, mechanical fasteners such as a snap connector, or the like, and may seal off the chamber within the far field baffle to prevent dust and moisture from entering the system and degrading the performance of the system.

Alternatively infrared filter **206** may be incorporated as a dye within the lens, a coating on the lens, a coating on the image sensor surface, a lid on an image sensor package, or elsewhere in the image sensor assembly. If the IR filter is not such that it can be used to close the opening **217** of far field baffle **204**, it may be desirable to place a clear window, such as glass, plastic, or the like in the opening **217** to prevent dust from entering into the interior of the far field baffle and interfering with the performance of the sensor system **102**.

Hydrophilic/Photocatalytic Coatings

In addition to functioning as an infrared filter, filter **206** serves to prevent debris and liquid from reaching the image sensor assembly through opening **207**. In the event an infrared filter is not utilized, a transparent window may be used in its place for this purpose.

Whether an infrared filter **206** or window is utilized, it is desirable to keep liquid drops from attaching to the outer surface of filter/window **206** within opening **207** since such liquid drops distort the image that is received and processed by the image sensor and because such liquid drops tend to dry and leave spots on the outer surface of filter/window **206**. Such liquid drops may form on filter/window **206** when, for example, an individual sprays a cleaning fluid on the inside of the windshield, which is in close proximity to the outer surface of filter/window **206**. It is very possible that the individual cleaning the windshield would forget to wipe the cleaning fluid from the filter/window of the image sensor, thus leaving a fine mist of water droplets over the surface of the filter/window, which would blur the images obtained by the image sensor.

To overcome this problem, the present invention may employ a hydrophilic coating on the outer surface of filter/window **206**. Hydrophilic coatings have a porous outer layer(s) that absorb the water or other liquid uniformly across its surface such that water droplets/spots do not form on its surface. One problem many such hydrophilic coatings experience is that the pores in the outer layer(s) may become clogged by oil, grease, or other contaminants thereby eliminating the effectiveness of the hydrophilic coating. To overcome that problem, a photocatalytic layer may be used in conjunction with the hydrophilic coating. Such photocatalytic layers break down the oil, grease, or other contaminants within the hydrophilic layer when exposed to ultraviolet light. This tends to clear the pores in the hydrophilic layer of the contaminant and allow it to operate effectively as a hydrophilic layer. Examples of hydrophilic/photocatalytic coatings that may be employed for this purpose are disclosed in U.S. patent application Ser. No. 09/602,919 entitled ELECTRO-OPTIC DEVICE HAVING A SELF-CLEANING HYDROPHILIC COATING filed on Jun. 23, 2000, by William L. Tonar et al. The entire disclosure of this application is incorporated herein by reference.

Assembly of The Image Sensor Assembly

Assembly of the image sensor will now be described with reference to image sensor assembly **801** of FIG. **8**, which is identical to the image sensor assembly **250** except for the gel **805** in image sensor assembly **801**. The image sensor **201**, lens structure **202**, and aperture stop **203** are combined to form an integral image sensor assembly **250** (FIG. **2**) or **801** (FIG. **8**). The image sensor **201**, which is advantageously a single integrated circuit (IC), is attached to printed circuit board **220** by any suitable conventional means such as using chip-on-board technology. Connections to the image sensor chip are made by any suitable means, such as wire bonds **804**. The bonded IC is then optionally covered with an optically clear stress relieving gel **805**. Examples of materials that can be used for this coating are Silicon Semi-Gel type C from Transene Co. of Danvers, Mass., or Dielectric Gel 3-6211 from Dow Corning Corp. of Midland, Mich. The coated IC is then encapsulated in a hard optically clear enclosure **802**, which may for example comprise epoxy. The epoxy is formed into a desired shape and may form, for example, a cube. The cube can be dimensioned to occupy a very small volume, and may for example have length and width dimensions of about 1 cm on a side, and a thickness of about 5 mm. The enclosure **802** (FIG. **8**) may be selected to have approximately the same index of refraction as the stress relieving gel **805** to prevent any refraction at the interface between these two materials. Examples of suitable epoxies are: Epo-Tek 301-2FL from Epoxy Technology, Inc. of Billerica, Mass., Epoxy 50 from Transene Co, or Dexter-Hysol OS 1900, or 300H from Nitto Denko Corporation. If the coefficient of thermal expansion of the enclosure **802** is sufficiently low that its expansion and contraction will not break wire bonds **804** at the expected operating temperature range for the image array sensor **201**, stress-relieving gel **805** can be omitted, as is shown by enclosure **230** over wire bonds **234** in image sensor assembly **250** in FIG. **2***a*.

Lens structure **202** is attached to the enclosure **802** (FIG. **8**) or enclosure **230** (FIG. **2**) using a UV curable optically clear adhesive **232**. UV curable adhesive **232** is dispensed onto the epoxy cube **802** and lens **202** is juxtaposed with UV curable adhesive **232**. Lens structure **202** is spaced from the image sensor **201** by a distance such that images at "infinity" are focused on the desired image regions **702** and **703**. The UV curable adhesive **232** is exposed to UV light and cured, locking lens structure **202** into position and permanently attaching lens structure **202** to enclosure **802**. The total distance between the back surface of the lens structure **202** and the top of the image sensor **201** die is 6.7 mm in the illustrated example. This distance is significantly longer than the effective focal length of 4.4 mm because the entire optical path between the back of the lens **202** and the front of the image array **201** is through a material with a higher index of refraction than air. Ideally the process of aligning the lens to the image sensor and curing the UV adhesive to hold it in place is accomplished while actively focusing the lens to accommodate variations in the manufacture of the lens and other image sensor assembly components. This process is accomplished by powering the image sensor during assembly and acquiring images of a far field scene from the image sensor into a host computer. The UV curable adhesive is dispensed onto the surface of the sensor and the lens is positioned on the UV curable adhesive using a multi-axis robot or positioner. The position of the lens is adjusted by the robot until the images acquired by the sensor appear in focus. At this point, the UV curable adhesive is exposed to UV light, cementing the lens into place. Micropositioning equipment suitable for this purpose is available from Physik Instremente GmbH and Company of Germany.

UV curable adhesive **232** serves to fill the space between the lens **202** and enclosure **802**, and thus fills in any ripples or other non-planar surfaces of enclosure **802** thereby precluding the creation of air gaps between the lens **202** and the enclosure **802**. To accomplish the desirable optical characteristics described hereinabove, UV curable adhesive **232** should have approximately the same index of refraction as enclosure **802**. This structure has the distinct advantage of minimizing the number of optical surfaces wherein a significant mismatch of indices of refraction between two

different mediums can occur, thus increasing the optical efficiency of the imaging system and reducing stray light. A suitable optically clear UV cured adhesive is Norland Optical Adhesive 68 manufactured by Norland Products, Inc., of New Brunswick, N.J. Other materials suitable for making the image sensor assembly **801** are available from Dymax.

The block **802** is completed by attaching the aperture stop **203** to lens **202**. If the aperture stop is a member, it may be attached to the outer surface of the lens using an adhesive, one or more mechanical fasteners, or the like. If the aperture stop is paint, it may be applied directly to the surface of the lens element **202** after the lenses **208** and **209** are covered with a removable mask, such as tape. After the paint dries, the mask can be removed. The optical assembly **801** is then mounted to a support **220**. In particular, the image sensor array **201** is physically mounted on a base substrate **221** by conventional means, and electrically connected to circuitry (not shown in FIG. 2*b*) by electrical connectors such as wire bonds, solder, one or more connectors, or the like. The base substrate **221** may for example be a printed circuit board.

The support **220** may be constructed of the same material as the far field baffle **204**, or it may be constructed of a different material. The base substrate **221** may be omitted if the far field baffle and the image sensor are mounted directly to either the support **220** or the housing (not shown) that carries the optical sensor assembly. For example, the support **220** may be a printed circuit board to which the image sensor **201** and the far field baffle are connected. Regardless of whether the base substrate is provided, the far field baffle is mounted to the support **220** or the housing (not shown) using an adhesive, a snap connector, a mechanical fastener, or the like.

An image sensor assembly **901** according to an alternate embodiment is illustrated in FIG. **9**. In this embodiment, the image sensor **201** is packaged using more conventional electronic packaging, such as a ceramic package with a glass lid or a clear plastic package, which may for example be a quad flat pack or a dual-in-line (DIP) package. The packaged image sensor **901** is mounted, by suitable conventional means such as by soldering, to printed circuit board **902**. An ultraviolet (UV) curable adhesive **905** is then dispensed onto the packaged image sensor **901**. The adhesive used can be the same adhesive described above with respect to adhesive **232**. The thickness of the UV curable adhesive is dependent on the packaged image sensor **901** type. If the required thickness is too great, layers of the UV curable adhesive can be built up or another material, such as an epoxy layer, can be sandwiched between the UV curable adhesives to decrease the thickness of the adhesive layer **905**. The epoxy may be the same material described above with respect to the enclosure **230**, **802**. The lens structure **202** is juxtaposed with the UV curable adhesive **905** and focused in the manner previously described. Finally, the aperture stop **203** is attached to the lens structure **202** using an adhesive (not shown), mechanical fastener or the like.

In addition to the means described herein above, the lens structure **202** may be supported relative to the image sensor by other means, such as a mechanical support. Such a structure is disclosed in U.S. Pat. No. 6,130,421, entitled IMAGING SYSTEM FOR VEHICLE HEADLAMP CONTROL, filed on Jun. 9, 1998, the disclosure of which is incorporated herein by reference thereto. The same may also be used to position and maintain the relative relationship between the components of the optical assembly including the aperture stop and the far field baffle. A mechanical fastening arrangement is disclosed below with respect to FIG. **24**.

Mirror Mounted Image Sensor Assembly

As mentioned above, the headlamp dimmer can be advantageously integrated into a rearview mirror **1000** as illustrated in FIG. **10**, wherein the light sensor assembly **201** is integrated into an automatic dimming electrochromic (EC) mirror subassembly **1001**, or other variable reflectance mirror assembly. This location provides an unobstructed forward view through a region of the windshield of the vehicle that is typically cleaned by the vehicle's windshield wipers (not shown). Additionally, mounting the image sensor in the mirror assembly permits sharing of circuitry such as the power supply, microcontroller and light sensors. More specifically, the same ambient light sensor may be used to provide an ambient light measurement for both the auto-dimming mirror function and the headlamp control function.

Referring to FIG. **10**, light sensor assembly **801** is mounted within a rearview mirror mount **1003**, which is mounted to the vehicle windshield **1002**. The rearview mirror mount **1003** provides an opaque enclosure for the image sensor. The infrared filter **206** can be mounted over a hole **1007** in the rearview mirror mount **1003**, as is shown. Alternatively, the far field baffle **214** can be used with the infrared filter **206** mounted therein. If the far field baffle **214** is used, it is mounted to the circuit board **1008** with the image sensor assembly **202**. Regardless of whether the far field baffle is used, the circuit board **1008** is mounted to rearview mirror mount **1003** using mounting brackets **1020** and **1021**. The mounting brackets may be implemented using any suitable construction, such as metal brackets, plastic brackets which can be formed either integrally with the housing **1003** or as separate components, mechanical fasteners which engage the circuit board **1008**, or the like. The separate brackets can be attached using an adhesive, metal fasteners or other mechanical fastening means. Image sensor assembly **201** is thus attached to, and held stationary by, the rearview mirror mount **1003** which is securely attached to the vehicle windshield or roof by conventional means.

A connector **1005** is connected to circuit board **1008** using a suitable commercially available circuit board connector (not shown), which in turn is connected to the image sensor **201** through circuit board **1008**. The connector **1005** is connected to a main circuit **1015** through a cable **1006**. The main circuit board is mounted within rearview mirror housing **1004** by conventional means. Power and a communication link with the vehicle electrical system, including the headlamps **111** (FIG. **1**), are provided via a vehicle wiring harness **1017** (FIG. **10**).

The Electrical System

The image sensor **201** electrically connected to the main circuit board **1015** and mounted in the vehicle rearview mirror housing **1004** (FIG. **10**) is represented in FIG. **11**. The microcontroller **1105** receives image signals from the image sensor **201**, processes the images, and generates output signals. Although described with reference to a circuit board mounted in a rearview mirror housing, the circuit board **1105** can be mounted in a vehicle accessory, such as a sun visor, overhead console, center console, dashboard, prismatic rearview mirror, A-pillar, or at any other suitable location in the vehicle. Should the controlled vehicle (**100** in FIG. **1**) include an electrochromic mirror, the circuitry for the electrochromic mirror preferably shares the circuit board **1015** (FIG. **10**) with microprocessor **1105**. Thus, the main circuit board **1015** is mounted within the mirror housing **1004**. The EC circuitry further includes ambient light sensor **1107** and

glare light sensor **1109**, which may advantageously be digital photodiode light sensors as described in U.S. patent application Ser. No. 09/307,191 entitled PHOTODIODE LIGHT SENSOR, filed Jan. 25, 2000, and U.S. patent application Ser. No. 09/491,192 entitled VEHICLE EQUIPMENT CONTROL WITH SEMICONDUCTOR LIGHT SENSORS, filed May 7, 1999, the disclosures of which are incorporated herein by reference. Microcontroller **1105** uses inputs from ambient light sensor **1107** and glare lights sensor **1109** to determine the appropriate state for the electrochromic mirror element **1102**. The mirror is driven by EC mirror drive circuitry **1111**, which may be a drive circuit described in U.S. Pat. No. 5,956,012, entitled SERIES DRIVE CIRCUIT, filed by Robert R. Turnbull et al. on Sep. 16, 1997, and PCT Application No. PCT/US97/16946, entitled INDIVIDUAL MIRROR CONTROL SYSTEM, filed by Robert C. Knapp et al. on Sep. 16, 1997; and U.S. patent application Ser. No. 09/236,969, entitled AUTOMATIC DIMMING MIRROR USING SEMICONDUCTOR LIGHT SENSOR WITH INTEGRAL CHARGE COLLECTION, filed May 7, 1999, by Jon H. Bechtel et al., the disclosures of which are incorporated herein by reference thereto. Other driver circuits are known that can be used to drive the EC element **1102**. The EC mirror drive circuit **1111** provides current to the EC element **1102** through signal output **1127**.

The mirror may communicate with a light control module over a serial link therebetween in a manner similar to that disclosed in commonly-assigned U.S. patent application Ser. No. 09/368,325, entitled "VEHICLE COMMUNICATION SYSTEM," filed on Aug. 3, 1999, by Robert C. Knapp et al., the entire disclosure of which is incorporated herein by reference.

The microcontroller **1105** can take advantage of the availability of signals (such as vehicle speed) communicated over the vehicle's electrical bus in making decisions regarding the operation of the headlamps **111**, which are represented by high beams **1131** and low beams **1132** in FIG. **11**, and the electrochromic mirror **1102**. In particular, speed input **1117** provides vehicle speed information to the microcontroller **1105**, from which vehicle speed criteria can be used for determining the control state for the headlamps **111**. The reverse signal **1119** informs microcontroller **1105** that the vehicle is in reverse, responsive to which the microcontroller **1105** clears the electrochromic mirror element **1102** regardless of the signals output from the light sensors **1107**, **1109**. Auto ON/OFF switch input **1121** is connected to a switch having two states to dictate to microcontroller **1105** whether the vehicle headlamps **1131**, **1132** should be automatically or manually controlled. The auto ON/OFF switch (not shown) connected to the ON/OFF switch input **1121** may be incorporated with the headlamp switches that are traditionally mounted on the vehicle dashboard or incorporated into steering wheel column levers. Manual dimmer switch input **1123** is connected to a manually actuated switch (not shown) provides a manual override signal for the high beam state. Should the current controlled state of the high beams be ON, the microcontroller will respond to actuation signal manual override signal control input **1123** to turn the high beams OFF temporarily until the driver restores operation or, optionally, until a predetermined time has elapsed. Alternatively, should the high beams be OFF, the microcontroller **1105** will respond to an actuation signal on input **1123** to turn the high beams ON. The manual high beam control switch can be implemented using a lever switch located on the steering column of controlled vehicle **100** (FIG. **1**).

The circuit board **1101** has several outputs. The control signal on electrochromic output **1127** provides current to the electrochromic element **1102**. Additional outputs (not shown) may optionally be provided to control exterior electrochromic rearview mirrors (not shown) if such additional mirrors are provided. The microcontroller **1105** communicates the current state of the low beam headlamps **1131** and the high beam headlamps **1132** to the headlamp drive **1104** via headlamp control output **1127**. The microcontroller **1105** generates control signals communicated over conductor **1113** (FIG. **11**) to an optional visual indicator **1115** which displays the current state of the high beam headlamps to the driver of controlled vehicle **100**. The high beam indicator is traditionally located in or near the vehicle's instrument cluster on the vehicle dashboard. As described further below, a separate indicator may be provided to indicate whether the automatic headlamp control is active. A compass sensor **1135** may be connected to the circuit board **1015** via a bi-directional data bus **1137**. The compass can be implemented using a commercially available compass of the type generating digital or analog signals indicative of the vehicle's heading, such as those described in U.S. Pat. No. 5,239,264 entitled ZERO-OFFSET MAGNETOMETER HAVING COIL AND CORE SENSOR CONTROLLING PERIOD OF AN OSCILLATOR CIRCUIT; U.S. Pat. No. 4,851,775 entitled DIGITAL COMPASS AND MAGNETOMETER HAVING A SENSOR COIL WOUND ON A HIGH PERMEABILITY ISOTROPIC CORE; U.S. Pat. No. 5,878,370 entitled VEHICLE COMPASS SYSTEM WITH VARIABLE RESOLUTION; U.S. Pat. No. 5,761,094, entitled VEHICLE COMPASS SYSTEM; U.S. Pat. No. 5,664,335, entitled VEHICLE COMPASS CIRCUIT; U.S. Pat. No. 4,953,305 entitled VEHICLE COMPASS WITH AUTOMATIC CONTINUOUS CALIBRATION; U.S. Pat. No. 4,677,381 entitled FLUX-GATE SENSOR ELECTRICAL DRIVE METHOD AND CIRCUIT; U.S. Pat. No. 4,546,551 entitled ELECTRICAL CONTROL SYSTEM; U.S. Pat. No. 4,425,717 entitled VEHICLE MAGNETIC SENSOR; and U.S. Pat. No. 4,424,631 entitled ELECTRICAL COMPASS, the disclosures of all of these patents are hereby incorporated herein by reference. A fog lamp control **1141** can be connected to receive via fog light control output **1142** control signals generated by microcontroller **1105**. Fog lamp control **1141** controls front fog lamps **1143** and rear fog light **1145** to turn ON and OFF.

Some or all of the inputs **1117**, **1119**, **1121**, **1123**, and **1135**, and outputs **1127**, **1113**, **1127**, and **1142**, as well as any other possible inputs or outputs, such as a steering wheel input, can optionally be provided through a vehicle communications bus **1125** shown in FIG. **11**. Vehicle bus **1125** may be implemented using any suitable standard communication bus, such as a Controller Area Network (CAN) bus. If vehicle bus **1125** is used, microcontroller **1105** may include a bus controller or the control interface may be provided by additional components on the main control board **1015**.

FIG. **12** illustrates a headlamp drive **1104** including a drive circuit **1203** for low beam headlamps **1131** and a drive circuit **1201** for high beam headlamps **1132**. Bus **1127** includes respective wires **1206** and **1207** carrying pulse width modulated (PWM) signals generated by microcontroller **1105** for driving low beam headlamps **1131** and high beam headlamps **1132**. Alternatively, headlamp drive **1104** may contain a DC power supply to vary the voltage supplied to the lamps **1131**, **1132**, and thus their brightness, in response to control signals on output **1127**. Yet another alternative envisioned is to vary the aim of the high beam headlamps **1131** as is described hereinbelow and as taught in U.S. Pat. No. 6,049,171, entitled CONTINUOUSLY VARI-

ABLE HEADLAMP CONTROL, filed by Joseph Stam et al. on Sep. 18, 1998, the disclosure of which is incorporated herein by reference.

Headlamp drive **1104** provides power to the high beam **1131** and low beam **1132** headlamps. In the simplest case, the headlamp drive contains relays engaged in response to signal **1127** to turn ON or OFF the headlamps. In a more preferred embodiment, high beam headlamps **1131** and **1132** fade ON or OFF under the control of headlamp drive **1104** which generates a variable control signal. Such a control system is described in copending U.S. Pat. No. 6,049,171 incorporated herein above by reference thereto. In general, the patent teaches variable emission control of the headlamps can be provided by energizing the headlamps using a pulse width modulation (PWM) supply, wherein the duty cycle of the drive varied between 0% and 100% to effect a continuously variable brightness from the headlamps **1131**, **1132**.

The microcontroller **1105** analyzes images acquired by the image sensor assembly **201** responsive to which it detects oncoming or preceding vehicles in the forward field of view. The microcontroller **1105** uses this information in conjunction with the various other inputs thereto to determine the current control state for the headlamps **1131**, **1132**. The current control state of the headlamps refers to the brightness of the high beams and the low beams. In a variable control system, this brightness is varied by changing the duty cycle of the beams or the DC voltage applied to the lamps as described above. In a non-variable system, the control state refers to whether the high beams and low beams are ON or OFF. A more detailed schematic showing the connections to the microcontroller **1105** is shown in FIG. **13**. The microcontroller **1105** can be implemented using a microcontroller, a microprocessor, a digital signal processor, a programmable logic unit, a discrete circuitry, or combination thereof. Additionally, the microcontroller may be implemented using more than one microprocessor.

Operation

The combined effect of the lens structure **202** and the far field baffle **204** will first be described with respect to FIGS. **2***a* and **7**. As mentioned above, in one embodiment, the image array **301** contains 64 columns and 80 rows of 30 μm pixels. The forward scene imaged through the red lens **209** is located on one region **703** of the image array **301**. The forward scene imaged through the other lens element **208** is located on region **702** of the image array **301**. In the embodiment illustrated, each of these regions is a 60 wide by 20 high pixel subwindow of the image array. The centers of the two regions **702** and **703** are separated 1.2 mm in the Y direction, the same spacing as the center axis of lens **208** and **209**. Fourteen pixel rows **704** define a band that lies between the two regions **702**, **703** and serves as a border, or buffer, separating these two regions.

The image sensor assembly **250** provides several advantages. Because the block will be solid, it eliminates any surfaces between the image sensor **201** die and the lens structure **202**. By eliminating these surfaces, stray light is reduced. Second, the preferred embodiment allows for the active alignment of the lens, which allows for compensation of various manufacturing variances, as is described in greater detail herein above. Finally, the assembly is inexpensive, eliminating the need for costly ceramic packaging. Some or all of the above-mentioned advantages can be realized through variations on this structure. For example, the enclosure **230**, UV curable adhesive **232** and possibly the stress relieving gel **805** (FIG. **8**) can be replaced with a UV cured epoxy adhesive.

In operation, an image is exposed onto the image array **301** (FIG. **3**) for an exposure period, which may also be referred to herein as an integration period. At the end of the exposure period, an output signal is stored for each of the pixels, and preferably is stored in the pixels as is the case with the photogate pixel architecture described in U.S. Pat. No. 5,471,515 previously incorporated herein by reference. The output signal from each of the pixels is representative of the illumination sensed by each pixel. This output signal is transferred to the column output circuitry **302** one row at a time. The column output circuitry includes capacitors storing the respective pixel output signals for each pixel in the row. Next, the pixel output signals are successively amplified by an analog amplifier **303**. The amplifier gain is advantageously adjustable, and may for example be controlled to selectively increase the amplitude of the amplifier input signal by 1 (unity gain) to 15 times, in integer increments. Adjustment of the gain of the amplifier permits adjustment of the system sensitivity. The amplified analog signals output from amplifier **303** are sampled by a flash analog-to-digital converter (ADC) **404**. The flash ADC **404** converts each of the amplified analog signals, which correspond to respective pixels, into eight-bit digital gray scale values. Various bias voltages for the sensor are generated by digital-to-analog converter (DAC) **105**. Two of the voltages generated by the bias generators are the ADC high and low reference values, which determine the analog voltages that will correspond to digital values of 255 and 0, respectively, thus setting the range of the ADC.

Serial timing and control circuitry **309** dictates the timing sequence of the sensor operation, and is described in detail in co-pending U.S. Pat. No. 5,990,469, entitled CONTROL CIRCUIT FOR IMAGE ARRAY SENSORS, issued to Jon H. Bechtel et al on Nov. 23, 1999, the disclosure of which is incorporated herein by reference.

The image sensor control process will now be described beginning with reference to FIG. **14**. The control process may include control of an electrochromic (EC) mirror. However, because processes for controlling an EC mirror are well known, such processes are not completely described herein. Electrochromic devices are generally known, and examples of electrochromic devices and associated circuitry, some of which are commercially available, are disclosed in Byker U.S. Pat. No. 4,902,108; Bechtel et al. Canadian-Pat. No. 1,300,945; Bechtel U.S. Pat. No. 5,204,778; Byker U.S. Pat. No. 5,280,380; Byker U.S. Pat. No. 5,336,448; Bauer et al. U.S. Pat. No. 5,434,407; Tonar U.S. Pat. No. 5,448,397; Knapp U.S. Pat. No. 5,504,478; Tonar et al. U.S. Pat. No. 5,679,283, Tonar et al. U.S. Pat. No. 5,682,267; Tonar et al. U.S. Pat. No. 5,689,370; Tonar et al. U.S. Pat. No. 5,888,431; Bechtel et al. U.S. Pat. Nos. 5,451,822; 5,956,012; PCT application Serial No. PCT/US97/16946; and U.S. patent application Ser. No. 09/236,969, the disclosures of which are incorporated herein by reference thereto.

The forward ambient light sensor **1107** and rear glare sensor **1109** measure the forward and rear light levels, as indicated in step **1401** (FIG. **14**). The forward ambient measurement is used to control both the low beam and high beam headlamps **1131**, **1132** and the electrochromic mirror **1102**. Additionally, the forward ambient measurement may be used to control the brightness of the daytime running lights and the brightness of the tail lights. The rear glare measurement is used for the control of the electrochromic mirror **1102** reflectivity. The forward ambient light level measurement is averaged with prior measurements to com-

pute a forward time averaged ambient light level. This average light level is computed as the average of measurements taken over a 25–30 second interval. Responsive thereto, the microcontroller **1105** computes the control state for electrochromic element **1105** as a function of the light level measured by sensors **1107** and **1109** in step **1202**. Where the microcontroller **1115** is a microcontroller selected from the Motorola MCS912, the electrochromic element drive state can be set by programming a pulse width modulated (PWM) duty cycle corresponding to the desired reflectance level of the electrochromic element into a pulse width modulated peripheral to the Motorola MCS912 family microcontroller. This PWM output is then fed to a series drive circuit in a manner similar to that disclosed in U.S. Pat. No. 5,956,012, entitled SERIES DRIVE CIRCUIT, filed by Robert R. Turnbull et al. on Sep. 16, 1997. If the headlamps **1131**, **1132** are not in auto mode as determined in step **1403**, which is manually set responsive to the signal **1121**, the microcontroller **1105** returns to step **1401**, such that the microcontroller will continue to control the variable reflectance of the electrochromic element **1102**. Decision **1403** provides the user with a manual override if the high beams are ON. Additionally, the high beam automatic control will be skipped in step **1403** (the decision will be NO) if the high beams are not ON.

If it is determined in step **1403** that the automatic mode is active, the microcontroller **1105** uses the average ambient light level measured in step **1401** to determine whether the ambient light level is below a low beam minimum threshold in step **1404**. The threshold may for example be 1–3 lux, and in one implementation was 2 lux. If the ambient light level is above the threshold, indicating that high beam headlamps would not provide significant advantage, high beam control will not be used, and the microcontroller **1105** returns to step **1401**. If the ambient light level is below the low beam minimum, for example below approximately 2 lux, the use of high beam headlamps may be desired. In this case, the microcontroller **1105** will operate to control the headlamps **1131**, **1132**. In addition to the average ambient light level discussed above, it is also advantageous to consider the instantaneous ambient light level. Should the instantaneous ambient light level suddenly drop to a very low value, for example less than 0.5 lux, automatic high beam operation may begin immediately rather than waiting for the average ambient light level to reach the threshold for operation of the high beams. This situation may occur when a vehicle sitting under a well lit intersection suddenly crosses the intersection into a dark street where high beam operation is desired immediately. The microcontroller **1105** analyzes images of the forward scene acquired by image sensor **201** to detect the presence of oncoming or preceding vehicles as indicated in step **1405**. Based upon the results of step **1405**, the microcontroller sets the control state of the headlamps in step **1406**. Setting the control state requires setting a duty cycle for the pulse drive in the preferred embodiment. The Motorola MCS912 family microcontroller includes timer/counter peripherals which can be used to generate pulse width modulated signals **1206** and **1207**. In some vehicles, the low beam headlamps will always be ON regardless of the state of the high beams. In such a vehicle, only the duty cycle of the high beams will be varied. Other vehicles will have the low beams OFF when the high beams are ON, in which case the duty cycle of the low beams will be reduced as the high beam duty cycle is increased. Control of the vehicle headlights using a PWM signal is disclosed in U.S. Pat. No. 6,049,171, entitled CONTINUOUSLY VARIABLE HEADLAMP CONTROL, filed by Joseph Stam et al. on Sep. 18, 1998, the disclosure of which is incorporated herein by reference.

Step **1405**, which is the process of acquiring images in the forward field of the vehicle and analyzing such images, is described in greater detail with reference to FIG. **15**. A first pair of images are acquired in step **1501** through both the red lens **209** and the cyan lens **208**, corresponding to the two fields **702** and **703** shown in FIG. **7**. The field of view of the resulting images is approximately 25° horizontally and 15° vertically using the 64 by 26 pixels, the lens optics, and the far field baffle described above. These images are taken at a low sensitivity. Sensitivity of the image sensor **201** may for example be dictated by the frame exposure time, the analog amplifier gain, and the DAC high and low references. The image sensor should be just sensitive enough to image oncoming headlamps at the maximum distance for which the controlled vehicle's headlamps should be dimmed. These images will be sufficient to detect oncoming headlamps at any distance of interest and nearby tail lamps without being washed out by bright headlamps or other noise light sources. In this mode, the sensor should not be sensitive enough to detect reflections off signs or reflectors except in rare cases where the reflecting object is very near to the controlled vehicle. During dark ambient light conditions, this sensitivity will be low enough to detect only lighted objects.

The sensitivity of the image sensor when acquiring the images in step **1501** may also be varied according to whether the high beams are currently ON. When controlling high beams manually, a driver will typically wait until an oncoming vehicle **105** (FIG. **1**) or a preceding vehicle **110** is almost close enough for the controlled vehicle's high beams to be annoying before dimming the headlamps **111**. However, if the high beams are OFF, most drivers will not activate their high beam headlamps even if an oncoming vehicle **105** is at a great distance. This is in anticipation that the oncoming vehicle **105** will soon come within a distance where the controlled vehicle's high beam headlamps will annoy the oncoming driver, such that the driver of the controlled vehicle **100** will have to turn the high beams OFF shortly after they were activated. To partially mimic this behavior, a higher sensitivity image is acquired if the high beams are OFF, enabling detection of vehicles at a greater distance, than if the high beams are ON. For example, the image sensor when the high beams are OFF can have 50% greater sensitivity than when the high beams are ON.

The images are analyzed in step **1502** (FIG. **15**) to locate any light sources captured in the images. In step **1503**, the properties of the light sources detected are analyzed to determine if they are from oncoming vehicles, preceding vehicles, or other objects. If a light source from a preceding vehicle **110** is bright enough to indicate that the high beams should be dim, the control process proceeds to step **1510** and the high beam state is set.

If no vehicles are detected in step **1503**, a second pair of images is taken through lens **208**, **209** at a greater sensitivity. First, a determination of the state of the high beams is made in step **1505**. This determination is made because the sensitivity of the second pair of images may be five to ten times the sensitivity of the first pair. With a higher sensitivity image, more nuisance light sources are likely to be imaged by the image sensor **201**. These nuisances are typically caused by reflections off road signs or road reflectors, which become much more pronounced with the high beams ON. When the high beams are ON, it is advantageous to limit the forward field of view to the area directly in front of the controlled vehicle such that it is unlikely that reflectors or reflective signs will be in the field of view. An ideal narrowed field of view is about 13° horizontally, which is achieved by a reduction of the width of regions **702** and **703**

(FIG. 7) to about 35 pixels. If the high beams are OFF, an image with the same field of view as the low sensitivity images acquired in step **1501** can be used since the reflections of low beam headlamps off of signs and reflectors are much less bright than those when high beams are used. Thus, the decision step **1505** is used to select either a narrow field of view image in step **1506** or a wide field of view in step **1507**. For either field of view, a pair of images will be taken. As described above with respect to the acquisition of low sensitivity images in step **1501**, the sensitivity of the high sensitivity images may also be varied according to the state of the high beam headlamps to provide additional control in avoiding nuisance light sources.

As with the low sensitivity images, the high sensitivity images are analyzed to detect light sources in step **1508**. A determination is made if any of these light sources represent a vehicle close enough to the controlled vehicle to require dimming of the high beam headlamps.

Additional images, with greater sensitivity and/or different fields of view, may be acquired in addition to those mentioned above. Additional images may be necessary depending on the dynamic range of the image sensor. For example, it may be necessary to acquire a very high sensitivity image with a very narrow field of view to detect a preceding car's tail lamps at a great distance. Alternatively, should the image sensor have sufficient dynamic range, only one pair of images at one sensitivity may be needed. It is advantageous to use three sets of images, a low sensitivity set, a medium sensitivity set, and a high sensitivity set. The medium sensitivity set has about 5 times the sensitivity of the low gain and the high gain has about 20 times the sensitivity of the low gain. The low gain image set is primarily utilized for detection of headlamps while the medium and high gain images are primarily utilized for detection of tail lamps.

Depending on the quantum efficiency of the image sensor at different wavelengths of light, and the filter characteristics of the filters used for the lens elements **208** and **209**, it may be advantageous to use a different sensitivity for the two regions **702** and **703**. The timing and control circuitry **309** described in the U.S. Pat. No. 5,990,469 can be enhanced to provide the capability to acquire two different windows of pixels simultaneously and use different analog gains for each window. This is accomplished by adding a register which contains the gain values for the analog amplifier used during acquisition of each subwindow. In this way, the relative sensitivity of the two regions can be automatically balanced to provide a similar output when a white light source is imaged through both lens elements. This may be of particular advantage if the image for region **703** is acquired without filtering the light rays, for example by using a clear lens instead of a cyan filter for rays passing through lens element **208**. For this lens set, the pixels in region **702** will receive approximately 3 times as much light when imaging a white light source as those pixels in region **703** which receive light that has passed through a red filter. The analog gain can be set 3 times as high for pixels in red filtered region **703** to balance the output between the two regions.

The analysis of images to detect light sources indicated in steps **1502** and **1508** is described with reference to FIG. **16**. Analysis begins with the image in region **703** acquired through the red lens. It is advantageous to begin with the red filtered image because several nuisance light sources do not admit a significant amount of red light. These nuisance light sources include mercury vapor streetlights, green traffic lights, and reflections off green and blue highway signs. Therefore, a number of potential nuisance light sources are eliminated from consideration. Pixel locations are referred to by X and Y coordinates with the 0,0 pixel location corresponding to a top left pixel. Beginning with the 0,0 pixel **1401** and raster scanning through the image, each pixel is compared to a minimum threshold in step **1602**. The minimum pixel threshold dictates the faintest objects in the image that may be of interest. If the current pixel is below the pixel threshold and it is not the last pixel in the red image window, as determined in step **1603**, analysis proceeds to the next pixel as indicated in step **1604**. The next pixel location is determined by raster scanning through the image by first incrementing the X coordinate and examining pixels to the right until the last pixel in the row is reached, and then proceeding to the first pixel in the next row.

If it is determined that the current pixel value is greater than the minimum threshold, a seed fill analysis algorithm is entered in which step the size, brightness and other parameters of the identified light source are determined as indicated in step **1605**. The seed fill algorithm is used to identify the pixels of the image sensor associated with a common light source, and thus identify associated pixels meeting a pixel criteria. This can be accomplished by identifying contiguous pixels exceeding their respective threshold levels. Upon completion of the seed fill algorithm, the properties of the light source are added to the light source list in step **1606** for later analysis (steps **1503** and **1509** in FIG. **15**) to determine if certain conditions are met, which conditions are used to identify whether the light source represents an oncoming or preceding vehicle. A counter of the number of sources in the list is then incremented as indicated in step **1607**. The microcontroller then goes to step **1603**.

If it is determined in step **1603** that the last pixel in the red image has been examined, the microcontroller **1105** determines whether any light sources were detected, as indicated in step **1608**. If no light source is detected, the analysis of the image terminates as indicated at step **1609**. If one or more light sources are detected through the red lens **209**, the cyan or clear image window **702** is analyzed to determine the brightness of those light sources as imaged through the other lens **208**, in order to determine the relative color of the light sources. In this situation, the "brightness" of the sources refers to the sum of the gray scale values of all the pixels imaging the source; a value computed by the seed fill algorithm. The first source on the list is analyzed in step **1610**. A seed fill algorithm is executed in step **1611**, with the cyan image starting with the pixel having the same coordinates (relative to the upper left of the window) as the center of the light source detected in the red image. In this manner, only those pixels identified with a light source viewed through the lens associated with the red filter will be analyzed as viewed through the other filter, which is advantageous, as many nuisance light sources which would otherwise be analyzed when viewed through a clear or cyan filter will be removed by the red filter. By only considering light sources identified through the red filter, the amount of memory required to store information associated with light sources viewed through the other filter will be reduced. The ratio of the brightness of the source in the red image **703** to the brightness of the source in the other image **702** is stored in the light list, as indicated in step **1612**, along with the other parameters computed in step **1605** for the current light source. This procedure continues for other sources in the light list **1613** until the red to cyan ratios are computed for all sources in the list **1615**, at which point the analysis terminates at step **1614**.

As a further measure to reduce the required memory, the pixel data may be processed as it is received without storing

the entire image in memory. Such a processing algorithm is disclosed in commonly assigned U.S. patent application Ser. No. 09/799,310, entitled IMAGE PROCESSING SYSTEM TO CONTROL VEHICLE HEADLAMPS OR OTHER VEHICLE EQUIPMENT, filed on Mar. 5, 2001, by Joseph S. Stam.

It will be recognized that where it is desirable to count the number of light sources to determine the type of driving environment, and in particular to identify city streets or country roads, it may be desirable to count all of the light sources viewed through the cyan or clear filter. In this way, nuisance light sources can be counted. Alternatively, the number of light sources viewed through the red filter can be counted for purposes of inhibiting turning ON the high beams if a threshold number of sources are identified.

The seed fill algorithm used in steps **1605** and **1611** is shown in FIGS. **17***a* and **17***b*. The outer section of the seed fill algorithm is entered with the current pixel value at step **1605**. The outer section of the seed fill algorithm is executed only once at each step **1605**, while the inner recursive seed fill algorithm is entered many times until all contiguous pixels meeting a pixel criteria are identified. After the entry step **1701** of the outer section of the seed fill algorithm, several variables are initiated as indicated in step **1702**. The variables XAVG and YAVG are set to zero. These variables will be used to compute the average X and Y coordinates of the pixels imaging a light source, which average coordinates will together correspond to the center of the light source. The TOTALGV variable is used to sum the gray scale values of all the pixels imaging the source. This value will define the brightness of the source. The SIZE variable is used to tally the total number of pixels imaging the source. The MAX variable stores the maximum gray scale value of any pixel imaging the source. A CALLS variable is used to limit the number of recursive calls to the recursive inner seed fill function to prevent memory overflow as well as for tracking.

The inner seed fill algorithm is first entered in step **1703**. The start of the inner recursive seed fill function for the first and subsequent calls to the seed fill function is indicated by block **1704**. The first step in the inner seed fill function is to increment the CALLS variable as indicated in step **1705**. Next, microcontroller **1105** determines if the CALLS variable is greater than the maximum allowable number of recursive calls as determined in step **1706**. The number of recursive calls is limited by the amount of memory available for storing light source information. If it is determined that the number of recursive calls exceeds the threshold, the recursive function proceeds to step **1719**, wherein the counter is decremented and then returns to the step from which the recursive function was called. Should this occur, a flag is set indicating that the current light source had too many recursive calls and parameters computed by the seed fill algorithm will be incorrect. This prevents too many levels of recursion from occurring, which would overflow the memory of the microcontroller. It is also possible to implement the algorithm non-recursively.

If the decision in step **1706** is that the CALL variable is not greater than the maximum allowable, the microcontroller **1105** next compares the current pixel with a minimum gray scale threshold in step **1707** to determine if the pixel is significantly bright to be included in the light source. The threshold considered in step **1707** can be constant or vary by position. If it varies, the variable thresholds may be stored in a spatial look-up table having respective pixel thresholds stored for each pixel, or each region of the image sensor. Where the threshold is variable by position, it is envisioned that where a pixel at one location exceeds its associated pixel threshold, the controller can continue to use that threshold for adjacent pixels while searching for a contiguous group of pixels associated with a single light source, or the controller can continue to use the respective pixel thresholds stored in the spatial look-up table.

If the condition in step **1707** is not met, this inner recursive seed fill function terminates by advancing to step **1719**. If the pixel has a high enough gray scale value as determined in step **1707**, its gray scale value is added to the global TOTALGV variable **1708**, its X and Y coordinates are added to the XAVG and YAVG variables **1709** and **1710**, and the size variable is incremented in step **1711**. If the gray scale value of the pixel is greater than any other pixel encountered in the current seed fill, as determined in step **1712**, the MAX value is set to this gray scale value **1713**.

Following a no decision in step **1712**, the gray scale value of the pixel is set to 0 to prevent further recursive calls from including this pixel. If a future recursive call occurs at this pixel, and the pixel is not zeroed, the pixel will be added the second time through. By zeroing the pixel, it will not be added again, as the pixel's gray scale value is no longer greater than the minimum threshold. Additionally, this pixel will be ignored in step **1602** should it be encountered again while scanning the image during analysis.

The inner recursive seed fill algorithm next proceeds to recursively call to itself until it has looked to the right, left, above and below each pixel until all of the contiguous pixels exceeding the minimum pixel threshold value in decision step **1707** are considered. Step **1715** represents returning to step **1704** for the pixel to the right. The microcontroller will continue to look at pixels to the right until it reaches a pixel that does not meet the criteria of decision step **1706** or **1707**. Step **1716** represents returning to step **1704** for the pixel to the left. Step **1717** represents returning to step **1704** to look at the pixel above. Step **1718** represents returning to step **1704** to look at the pixel below. The microcontroller will then look at the pixel to the left of the last pixel that did meet decision step **1707**. The processor will look at pixels adjacent each pixel exceeding the threshold of step **1707** should the neighboring pixels exist (i.e., the immediate pixel is not an edge pixel). Step **1719** decrements the CALLS variable each time the step is executed, and the microcontroller will return to the calling program until the CALLS value reaches 0. Returning to the function that called it may be another instance of the inner recursive function, or should this be the initial pixel examined, to the outer recursive algorithm **1721**.

An example of how the inner and outer seed fill algorithms operate will now be described with reference to FIG. **17***c*. The example is made with respect to an exemplary very small image sensor having 30 pixels. Pixels **4**, **9**, **10**, **11**, **14**, **15**, **16**, **17**, **18**, **21**, **22**, **23**, and **28** exceed the threshold in step **1707** in this example. Additionally, the number of calls required does not exceed the threshold in step **1706**. The image array **301** is impacted by a light source **1751**, indicated by contour **1751**. The microcontroller will operate as follows in evaluating the pixels. For pixel **1**, the microcontroller **1105** will enter the seed fill algorithm at step **1701**, initialize the variables in step **1702**, and set the current pixel in step **1703**. The microcontroller will next enter the inner seed fill function in step **1704**. The CALLS variable will be incremented to 1 in step **1705**, which is below the Maximum Calls threshold. Because there is no light on the pixel, the minimum threshold is not exceeded and the microcontroller will go to step **1719**, decrement the CALLS variable in step **1720**, and because this is the first time through the inner seed fill program, the microcontroller will continue to steps **1721**–**1723**. The process will be repeated for pixels **2** and **3**, which are both below the minimum pixel threshold used in step **1707**.

When the microcontroller gets to pixel **4**, it will enter the outer seed fill at step **1701**, set the variables to zero in step **1702**, set the current pixel to pixel **4** in step **1703**, and enter the inner seed fill algorithm. The CALLS variable will be incremented to 1, as it is the first pixel in this outer seed fill. The CALLS variable will be less than the Maximum Calls threshold and the pixel's gray scale value will exceed the minimum threshold. Accordingly, the gray value will be added to TOTALGV, the pixel coordinates will be added to those that will be considered for XAVG and YAVG, and the SIZE will be incremented such that the size will be 1. The gray value for pixel **4** will be the MAX, as it is the only gray value in this outer seed fill. The gray value will be set to zero for pixel **4** in step **1714**.

The microcontroller will then identify all of the contiguous pixels that exceed the threshold set in step **1707**. In particular, through the inner seed fill routine disclosed in FIGS. **17***a* and **17***b*, the microcontroller will add the pixels as follows. Pixel **4**, added first as it is the first with a gray scale value greater than the threshold ("the threshold" in this paragraph referring to the minimum threshold in step **1707**). The program then calls the recursive function for pixel **5** to the right, which is not added as it is below the threshold (as used in this paragraph, "added" means the pixel's coordinates are added to XAVG and YAVG, the pixel's gray scale value is added to TOTALGV, SIZE is incremented, and the pixel's gray scale value becomes the maximum pixel gray scale value if it exceeds MAX). Pixel **3** to the left is called next, and it is not added for the same reason. There is no pixel above pixel **4**. Accordingly, the recursive function is next called for pixel **10** in step **1718**. Pixel **10** will be added as its value is greater than the threshold. The microcontroller **1105** will then look to the right of pixel **10**, namely at pixel **11**, which is greater than the threshold, so it will be added. The microcontroller will then look to the right of pixel **11**, which is pixel **12**. Pixel **12** will not be added as its gray scale value is below the threshold. Looking to the left of pixel **11**, pixel **10** will not be added as it was zeroed when it was added previously. Looking above pixel **11**, pixel **5** will not be added. Looking below pixel **11**, pixel **17** will be added. Next, the recursive routine will be called for the pixel to the right of pixel **17**. Pixel **18** will be added. Moving on to the recursive routine for pixel **18**, there is no pixel to the right of pixel **18**. Looking to the left of pixel **18**, pixel **17** will not be added as it was zeroed when it was added. Looking above pixel **18**, pixel **12** will not be added. Looking below pixel **18**, pixel **24** will not be added as it is below the threshold. Moving back to the previous recursive function that was not exhausted, the microcontroller **1105** will move back and look to the left of pixel **17**, which is pixel **16**. Pixel **16** is added. Calling the recursive function again, the microcontroller will look to the right of pixel **16**. Pixel **17** will not be added as it was cleared after it was previously added. Looking to the left of pixel **16**, pixel **15** is added. Calling the recursive function from pixel **15**, the microcontroller will look to the right at pixel **16**. Pixel **16** is not added, as it was zeroed after it was previously added. Looking to the left, pixel **14** is added. Calling the recursive function from pixel **14**, the microcontroller will look to the right at pixel **15**, which will not be added. Looking to the left of pixel **14**, pixel **13** is not added. Looking above pixel **14**, pixel **8** is not added. Looking below pixel **14**, pixel **20** is not added. Moving back to the function that called the recursive function for pixel **14**, the microcontroller will look above pixel **15** at pixel **9**. Pixel **9** is added. Calling the recursive function for pixel **9**, looking to the right, pixel **10** is not added. Moving to the left, pixel **8** is not added as it is below the threshold. Looking above, pixel **3** is not added. Looking down, pixel **15**is not added as it was previously cleared. Moving back to the function that called the recursive function for pixel **9** has the microcontroller looking at the pixel below pixel **15**. Pixel **21** is then added. Starting the recursive function for pixel **21**, looking to the right, pixel **22** is added. Starting the recursive function for pixel **22**, pixel **23** is added as it exceeds the threshold. Starting the recursive function for pixel **23**, pixel **24** is not added as it is below threshold. Moving to the left, pixel **22** is not added as it was zeroed. Looking above, pixel **17** is not added as it was zeroed after it was added. Looking down, pixel **29** is not added as it is below the threshold. Moving back to the function that called the recursive function for pixel **23** has the microcontroller **1105** looking to the left of pixel **22**. Pixel **21** is not added as it was cleared. Looking above pixel **22**, pixel **16** is not added. Looking below pixel **22**, pixel **28** is added.

Performing the recursive function for pixel **28**, pixel **29** to the right is not added, pixel **27** to the left is not added, pixel **22** above is not added, and there is no pixel below pixel **28**. Moving back one function, the recursive function for pixel **22** was completed, so the microcontroller returns to pixel **21**. Looking to the left of pixel **21**, pixel **20** is not added. Pixel **15** above pixel **21** is not added and pixel **27** below pixel **21** is not added. The recursive function for pixel **15** was exhausted, so the microcontroller looks above pixel **16** to pixel **10** which is not added. Looking below pixel **16**, pixel **22** is not added. Moving back one function has the microcontroller looking above pixel **17** at pixel **11**, which is not added. Looking below pixel **17**, pixel **23** is not added, if the recursive function for pixel **11** was completed, the microcontroller returns to the last non-exhausted pixel of the contiguous lighted pixels. The microcontroller looks to the left of pixel **10**, and pixel **9** is not added. The microcontroller looks above pixel **10**, and pixel **4** is not added. Looking below, pixel **16** is not added. The inner seed fill is complete.

After the last pixel is added, YAVG, XAVG and size are used to select the center of the light in steps **1722** and **1723**.

The seed fill scheme just described is the preferred seed fill algorithm for analysis of the red image **703**. It requires some modification for the other image **702**. This need can be seen from the following example. Where a pair of oncoming headlights is identified as two separate a lights in the red image, it is possible that these sources may contain more light in the cyan half of the spectrum than the red half (as is the case with High Intensity Discharge headlamps). In this case, what was detected as two separate light sources in the red image can bloom into one source in the cyan image. Thus, there would only be one source in the cyan image to correspond to two light sources in the red image. After step **1611** is completed for the first source in the red image, the bloomed cyan image pixels would have been cleared in step **1714**, such that they would not be available for the analysis of the second light source in the red image. Thus, after the source in the cyan image is determined to correspond to the first source in the red image, there would be no source on the cyan image to correspond to the second source in the red image. To prevent this, it is useful to preserve the image memory for the cyan image rather than setting the gray scale value to zero as in step **1714** so that the bloomed source is detected as corresponding to both of the sources in the red image.

Since the red image has already been processed, the memory that stored the red image can be used as a map to indicate which pixels in the cyan image have already been processed. All pixels in the red image memory will have been set to gray scale values less than the minimum thresh-

old as a result of the processing. The pixels that were identified as light sources where zeroed whereas the light sources that were not cleared will have some low gray scale value. This characteristic can be used to set the pixels in the red image memory to serve as markers for processing pixels in the cyan image. In particular, when the seed fill algorithm is executed for the cyan image, step **1714** is replaced by a step that sets the value of the pixel in the red image memory corresponding to the currently analyzed cyan pixel to a marker value. This marker value could be, for example, 255 minus the index of the current light source in the light list. The number 255 is the largest value that can be stored for a gray scale value. In this way, there will be a unique marker stored in the red image memory for pixels analyzed each time step **1611** is executed for a light on the list. In addition to the above change to step **1714**, a test must be added after step **1707** to determine if the value of the pixel stored in the red image memory corresponding to the currently analyzed pixel is equal to the marker value for the current light source index, indicating that this pixel has already been recursively visited, in which case the microcontroller would go to step **1719**.

Steps **1501** and **1502** for the red image in region **703** and corresponding steps **1506**, **1507** and **1508** for the other image in region **702**, have now been explained in detail. In step **1503** and **1509**, the light source list is analyzed to determine if any of the identified light sources indicate the presence of an oncoming or proceeding vehicle. FIG. **18** is a flow diagram of the series of tests applied to the information gathered on each light source in the light list during the previous analysis steps to determine the type of light source. The tests in FIG. **18** are applied to each source in the list independently.

First, a check is made to see if the recursive seed fill analysis of this light source exceeded the maximum number of subsequent recursive calls allowed as determined in step **1801**. If so, the light source is labeled an extremely bright light in step **1803** since the number of pixels in the source must be large to cause a large number of subsequent recursive calls. Next, the TOTALGV variable is compared to a very-bright-light-threshold **1802**. If TOTALGV exceeds this threshold, the light is also labeled as extremely bright in step **1803**.

If neither of the conditions **1801** or **1802** are met, the light source is analyzed to determine if it has a 60 Hz alternating current (AC) intensity component, indicating that the light source is powered by an AC source, in step **1804**, to distinguish it from vehicles which are powered by DC sources. Many streetlights, such as high-pressure sodium and mercury vapor lights, can be effectively distinguished from vehicle headlamps in this way. To detect the AC component, a series of eight 3×3 pixel images are acquired at 480 frames per second, for example. The 3×3 pixel window is centered on the center of the light source being investigated. The sums of the nine pixels in each of the 8 frames are stored as eight values. These eight values represent the brightness of the source at ¼ cycle intervals over two cycles. The magnitude of the 60 Hz Fourier series component of these eight samples can be computed by the following formula:

$$AC=(A^2+B^2)^{1/2}$$

$$A=1.0*(F1-FMIN)+(-1.0)*(F3-FMIN)+1.0*(F5-FMIN)+(-1.0)*(F7-FMIN)$$

$$B=1.0*(F0-FMIN)+(-1.0)*(F2-FMIN)+1.0.*(F4-FMIN)+(-1.0)*(F6-FMIN)$$

where F1 to F7 refer to the eight summed gray scale values of each of eight frames and FMIN refers to the minimum value of F1 through F7. The value AC is divided by the mean gray scale value of F1 to F8 to give the AC component of interest in step **1804**. The scheme is of particular convenience since the sampling rate is exactly four times the frequency of modulation analyzed. If this were not the case, the coefficients for each of F1 through F7 would have to be changed to accommodate this. Additionally, if the system were to be used in countries were the AC power is not at a 60 Hz frequency, the sampling rate or coefficients would be adjusted.

While the AC detection scheme is described for only one window, it is advantageous to perform the above analysis by imaging the source through both the cyan and red filters, or the red and clear filters, and then using the maximum computed AC component from the two sample sets to determine the AC component for step **1804**. This allows for accurate measurement of sources that have either strong short or long wavelength components in their spectrum. If the light source AC component is greater than the minimum threshold as determined in step **1805**, the light source is determined to be an AC source as indicated in step **1806**. Additional measures may be taken to aid in distinguishing between such nuisance light sources and headlamps, such as to provide a lower AC component threshold for an upper area of the sensed image, while providing a higher threshold for the mid to lower right hand side and an intermediate threshold for the mid to lower left hand side.

The next step is to distinguish light sources which are reflections off road signs or other large objects. Road signs are large compared to the size of the headlamp or tail lamp. As a result, they tend to be imaged onto many more pixels than a vehicle lamp, unless the lamp is so bright as to bloom in the image. Sign reflection sources may have a large number of pixels, indicated by the SIZE variable, but a lower average gray scale value than vehicle lamps which have a much higher intensity. If the SIZE variable exceeds a given size threshold as determined in step **1807**, the average gray scale value (TOTALGV/SIZE) is compared against an average pixel level threshold, which is the maximum sign average gray scale value, in step **1808**. If the average gray scale value is less than this threshold, the light source is determined to be a reflection off a sign as indicated in step **1809**.

An additional check for yellow signs, which typically occurs in the front of the vehicle when turning through a curved road, is to measure the color of bright objects and determine if they are likely yellow. Even when using the low gain image, the reflection off a nearby sign may saturate several pixels in both subwindows and make relative color discrimination difficult. However, the same high-speed images acquired when performing an AC validation can be used to accurately determine the relative color even for bright images. This is accomplished by looking at the average value of the F1 through F7 frames mentioned hereinabove through each lens. The ratio of the average of the F1 to F7 frames viewed through the red lens to the average of the F1 through F7 frames viewed through the cyan or clear lens is computed. This ratio will be higher for yellow signs than for white lights but not as high as for tail lamps. If this ratio is within a certain range indicating that it is likely a yellow sign, this object can be ignored or the threshold for dimming for this object can be decreased, allowing only extremely bright yellow objects to dim the high beams. By allowing the system to respond to bright yellow objects by dimming the high beams, the headlight dimmer will respond to a light source in the event that a headlamp is misdiagnosed as a yellow sign.

Once potential nuisance sources are filtered out, the light source can be identified as a headlamp or a tail lamp. The red to cyan ratio computed in step **1612** is used to determine if the source has sufficient red component to be classified as a tail lamp in step **1810**. If this ratio is lower than a tail lamp redness threshold, control proceeds to step **1811**, where the threshold for consideration as a headlamp is determined. This threshold can be determined in a number of ways, but the most convenient method is to use a two dimensional look-up table if the microcontroller has sufficient read-only memory (ROM) to accommodate the table, as is the case with the Motorola MCS912 family of microcontrollers exemplified herein.

The center of the light source is used as the index into the look-up table to determine the threshold. The look-up tables are created to provide different thresholds for different regions of the field of view. For example, the thresholds for regions of the field of view directly in front of the vehicle are lower than those used for regions off to the side. The look-up table can be optimized for the particular vehicle's high beam emission pattern to determine how annoying the high beams will be to oncoming and preceding traffic at various angles. Ideally, the look-up table used when the vehicle's high beams are activated is different than when they are not. When high beams are off, the thresholds to the side of the vehicle can be lower than they are when high beams are activated. This will prevent the high beams from coming ON when there is a vehicle in front of, but off at an angle to, the controlled vehicle, such as happens when on a curve on an expressway. Also, different lookup tables are used for high and low sensitivity images for much of the same reasons. In fact, the lookup tables may indicate that for certain regions, or all regions of the field of view in high sensitivity image, headlamps be ignored completely. A high sensitivity image is only analyzed if the low sensitivity did not detect oncoming or preceding vehicles, so non-red light sources in a high sensitivity image are most likely very distant headlamps or nuisance sources. Therefore, the high sensitivity images may only be analyzed for red sources.

In step **1812**, the TOTALGV variable, which is the total pixel level, is compared to the threshold total pixel level for headlights as determined from the appropriate look-up table. If this variable is greater than the threshold, the value is compared to the threshold multiplied by a bright multiplier in step **1813**. If TOTALGV is greater than this value, the light source is determined to be a bright headlamp in step **1815**. If not the light source is a headlamp as indicated in step **1814**. The need to distinguish between headlamps and bright headlamps will become clearer in the discussion of the control state of the headlamps. As an alternative to comparing TOTALGV to a threshold times a bright multiplier, yet another look-up table can be provided to dictate thresholds for bright headlamps.

A procedure similar to that just described is performed in step **1816** if the light source is determined to be red. A series of lookup tables are provided for-tail light thresholds and the appropriate lookup table is used to determine the threshold for the given light source location. In **1817**, the total pixel level for tail light threshold is compared to the TOTALGV variable to determine to light sources bright enough to be of interest. If so, the light source is labeled as a tail light in step **1819**. If not, the light source is ignored in step **1820**.

Should the cyan lens element **301** be replaced by a clear lens, a different ratio threshold is used in step **1810**. In this case, a red light will have approximately the same brightness in both images, but a white or other color light will be substantially brighter when imaged through the clear lens. This ratio is determined based on the analog gain settings for both the red and cyan (or clear) images.

Once the images of the forward field have been acquired and analyzed in step **1405**, the state of the headlamps must be determined in step **1406**. This is best described by considering a state machine implemented in the microcontroller **1105**, which state machine is illustrated in FIG. **19**. In the following example it is assumed that headlamp drive **902** is a pulse width modulator drive and the high beam brightness can be varied by changing the duty cycle of the pulse width modulator drive. It is also assumed that the low beam headlamps remain on at 100% duty cycle at all times. Each of the states in FIG. **19** represents a control state of the high beam headlamps. The duty cycle of the high beam headlamps is set to the value indicated by the current control state. The distribution of the duty cycles amongst the control states is non-linear to compensate for the fact that headlamp brightness is a non-linear function of duty cycle and to provide the appearance of a constant percent change from cycle to cycle. Also, there are several states for both 0% and 100% duty cycle, indicating that several states must be traversed before the headlamps begin to go ON or OFF, providing a time delay verification insuring that the detected light source is persistent over several images. The number of states is exemplary only, and those skilled of the art will recognize that it may vary depending on the desired fade ON and OFF rate of the high beams and time between cycles. Additionally, the bright light indicator (which is typically located on the vehicle's dashboard) fades ON as the state moves from state **11** to state **14**. The bright light indicator fades OFF as the states move from state **7** to state **4**. This provides some hysteresis to avoid flashing the indicator ON and OFF. Alternatively, if the indicator does not fade ON and OFF, the state at which the bright light indicator turns ON will preferably be a higher state than the state at which the bright light indicator turns OFF. In either case, hysterisis is provided for the headlamp control.

After each control cycle, the headlamp control state can remain the same or move to a different state. The rules for moving between states are described with reference to FIGS. **20***a* and **20***b*. First, if any of the lights in the light list were determined to have been extremely bright lights in step **2001**, the current control state is immediately set to a 0 state in step **2002**. This behavior allows bypass of the fade out feature and rapid response to the sudden appearance of headlamps in the forward field of view, such as happens when driving over a hill. Step **2003** determines whether a headlamp or tail lamp was detected in the light source list. If not, control proceeds to step **2004**, wherein it is determined whether the previous state was decremented in the last control cycle.

One of the advantages of the variable beam configuration is the ability to fade in and out high beams. If a reflection from a sign or reflector is misdiagnosed as a vehicle lamp, the high beams will begin to dim. When they do, the reflected source will no longer be present in the image and the high beams will fade back on, likely without bothering the driver. To prevent rapid oscillation between increasing and decreasing headlamp beam brightness, the control state must rest in the current state for one cycle before changing direction. Therefore, step **2004** considers the action during the previous cycle and the system will remain in the current state as indicated in step **2005** if the previous action was to decrement states.

If the action during the previous cycle was not to decrement states, vehicle speed is considered next in step **2006**. If a vehicle is stopped at an intersection, it will annoy the

driver if the high beams come ON, dim with a passing car, and then come ON again. To prevent this, the high beams are prevented from coming ON if a vehicle is traveling below a certain speed, for example 20-mph. A decrease in speed below the minimum speed threshold will not necessarily cause the high beams to dim unless there is an oncoming or preceding car present. Alternatively, the high beams can be configured to fade OFF every time the vehicle comes to a stop and then fade ON again once the vehicle begins moving, provided no other vehicles are present. In step **2007**, the number of lights in the light list (counted in step **1607**) is checked as an indication of whether the driver is driving in city conditions. If there are a large number of lights in the forward field of view, the high beams will not be turned ON. The number of the lights that are alternating current sources may also be considered.

If the criteria of steps **2004**, **2006**, and **2007** are met, the current control state is incremented one state in step **2008**. If this action results in the current control state exceeding state **12** as determined in step **2009**, the current control state is set to 15 in step **2010** forcing several time verification states before the beams can be dimmed again.

Should the microcontroller **1105** detect a headlamp or tail lamp in step **2003**, the microcontroller determines whether a bright headlamp was detected in step **2011**. If not, the prior cycle action is considered in step **2012** to prevent rapid oscillation between incrementing and decrementing to avoid rapid ongoing oscillations between states. If the prior action was not to increment, the current control state is decremented by 1 state in step **2014**. If the new control state is below state **3**, as determined in step **2015**, the current control state is set to 0 in step **2016**.

Finally, if a bright headlamp is detected in step **2011**, it is desirable to more rapidly fade out the high beams by decrementing 2 states in step **2018**, provided the previous action was not to increment in step **2017**, in which case the current state is decremented only one state.

A large number of variations of the scheme just described are possible. For example, more states can be added to increase or decrease the time it takes to fade the high beams in and out. The number of required states will depend upon the image acquisition and analysis cycle time. Ideally, the fade in/out period is about one to two seconds. Another alternative is to decrement states as a function of the brightest light source detected in the light list rather than to decrement a single state for every cycle. In this way, the brightness of the high beam is adjusted as a function of the distance of an oncoming or preceding vehicle rather than just fading in and out. This is particularly advantageous where the control mechanism is to vary the beam angle of the high beams rather than the intensity of the beams. Yet another alternative is to decrement states as a function of the current speed of the controlled vehicle. The rate at which states are decremented could increase at high vehicle speeds, since oncoming cars will overtake the controlled vehicle at a more rapid rate. Yet another alternative is to decrement states as a vehicle slows down. This would allow the high beams to fade out as a vehicle comes to a stop: a feature that may be desirable for some drivers. Finally, it should be noted that the use of discrete states is only exemplary. The intensity and/or aim of the high beam headlamps can be controlled by continuum of values from fully ON to fully OFF.

The previous discussions described in detail the operation of one cycle of the headlamp dimmer control sequence. This sequence is repeated indefinitely as long as the device is on. Depending on the time to complete one cycle, the above procedure may be interrupted to acquire rear glare sensor measurements for the electrochromic mirror. Additionally, the driver may interrupt the above sequence by activating the manual high beam switch generating input signal **1123** (FIG. **11**). This feature is necessary to allow the driver to override improper behavior of the control system or to use the high beams to alert other drivers through flashing the high beams.

Some additional features may be provided with the above-described hardware and software configuration. One such feature is daytime running lights (DRLs). On some vehicles, DRLs are provided by operating the high beams at a reduced intensity. By using the PWM drive circuitry provided, the high beams can be set to a reduced intensity during daylight conditions. The ambient light sensor **1107** can be used to determine daylight conditions and switch the headlamps to normal low beam operation at dusk. In particular, the ambient light level can have one or more light level thresholds associated therewith. When the ambient light level is a daytime one threshold, the daytime running lights will be ON. Below that threshold, but above another lower threshold, the low beams can be ON. Below that lower bright activate ambient light level threshold, the high beams may be operated automatically if the driver does not manually disable high beam operation.

Even without the use of DRLs, it is desirable to have automatic activation of the low beam headlamps at dusk. This control can be provided by the use of the ambient light sensor **1107**. For better performance, an additional light sensor can be provided which senses light from a direction upwards rather than looking straightforward as the ambient light sensor **1107** does. Such a sky sensor arrangement is disclosed in U.S. patent application Ser. No. 09/491,192, entitled VEHICLE EQUIPMENT CONTROL WITH SEMICONDUCTOR LIGHT SENSORS, filed by Jon Bechtel et al. on Jan. 25, 2000, the entire disclosure of which is incorporated herein by reference. Alternatively, a few rows of pixels in the image sensor can be used to image a region of the sky above the horizon. An imaging system disclosing such an arrangement is described in U.S. Pat. No. 6,130,421, the disclosure of which is incorporated herein above by reference. The ability to image through both the red and cyan filters can help to distinguish between clear and overcast conditions and to detect a sunset.

It is envisioned that the system can detect a tunnel using the image sensor and a sky sensor. In particular, a potential tunnel condition is detected when a large area of contiguous dark pixels is detected that meets a size threshold level and is located in the center of the image, under daytime ambient light conditions. If the dark area grows while the ambient light conditions continue to sense day ambient light conditions, the potential tunnel condition will continue. If the image sensor continues to see a large dark area forward of the vehicle when the daylight ambient conditions are no longer detected, the vehicle will be determined to be in a tunnel, and the headlights will be ON. The headlights will remain on until the daylight ambient conditions are detected, at which time the headlights will be turned OFF and daylight running lights will be turned ON if the controlled vehicle has daytime running lights.

Speed Varying Thresholds

The speed input **1117** can be used in additional ways by microcontroller **1115**. For example, when driving on an expressway, it is necessary to detect oncoming cars in the opposite lane, which is usually separated by a median. Therefore, the microcontroller must be more sensitive to oncoming headlamps at larger angles than would be neces-

sary for back-road driving where there is no median separating oncoming traffic. Incorporating a wide field of view for back-road driving has the disadvantage of increasing the likelihood that the image sensor will detect house lights, which are typically incandescent. Incandescent light sources will not be filtered by the AC rejection algorithm. Such house lights are not typically present on the side of the freeway. By increasing the sensitivity of the device to objects at higher angles when the vehicle is traveling at higher speeds, such as speeds in excess of 50 to 60 mph, the system will be able to sense cross-median traffic on expressways without increased sensitivity to house lights on back roads. It is envisioned that the field of view could be increased when the vehicle speed exceeds 65 mph and decreased when the vehicle speed passes below 60 mph.

In particular, it is envisioned that prior to step **1601**, additional steps can be provided to make the field of view speed sensitive. These steps are illustrated in FIG. **21**. The vehicle speed is input in step **2101**. The microcontroller determines in step **2103** whether the status is currently a wide view for expressway driving. If it is not, the microcontroller **1105** determines whether the speed is greater than 55 mph. If not, the status does not change. If the vehicle speed is determined to be greater than 55 mph in step **2105**, the field of view of the image sensor **201** is increased as indicated in step **2107**. The field of view in the horizontal direction can be increased by 30 to 150 percent, and advantageously 60 to 125 percent, relative to the narrower field of view at lower speeds. If it was determined in step **2101** that the controlled vehicle **100** is in the expressway state, the microcontroller **1105** determines in step **2109** whether the vehicle speed has dropped below 45 mph. If it has, the microcontroller reduces the field of view of image sensor **201** to its narrower non-expressway field of view. In one advantageous embodiment, the field of view remains the same at all speeds but the thresholds for responding to lights at higher angles are decreased as speed increases. This is advantageous because it allows detection of very bright objects at high angles when the vehicle is traveling at slow speeds, but it is not sensitive to less bright objects, such as house lights or street signs, when traveling at slow speeds. In particular, at high speeds reducing the thresholds increases the sensitivity to cross-median traffic. The thresholds are reduced more significantly to the left than to the right since cross median traffic is to the left. This property can be reversed for left-hand-drive countries.

It is envisioned that the field of view will be varied by increasing and decreasing the width of the pixels used by the image sensor in the manner described above when the high beams are ON or OFF.

According to another aspect of the invention, the integration time for the pixels of the image array sensor can be increased at higher speeds. This increase in integration period increases the sensitivity of the image array sensor. The system is thus able to detect an oncoming vehicle sooner. This may be particularly advantageous, as oncoming cars are likely to be traveling faster when the controlled vehicle is traveling faster. Accordingly, providing the light control system with a higher sensitivity to shorten the response time will better emulate a desired dimming characteristic of the headlamps by dimming the headlamps at a desired vehicle distance. To provide this function, in step **2107** the microcontroller **1105** increases the sensitivity and/or widens the horizontal viewing angle, whereas in step **2111**, the microcontroller decreases the sensitivity and/or narrows the horizontal viewing angle.

It is further envisioned that adjustments can be made to the threshold in step **1707** as a function of speed. Such a system can be implemented using a look-up table stored in read only memory. FIG. **22** illustrates regions of the image sensor array **301**, with the regions radiating outwardly from the center. The regions may not be symmetrical since oncoming traffic usually occurs more to the left and signs and nuisance light sources are more likely to the right in right side drive countries. The look-up table sets a respective threshold for each of the regions **1–6** with the regions having sequentially, incrementally greater thresholds moving outwardly from the center. Thus the center region **1** will have the lowest threshold and the outer peripheral **6** will have the highest threshold. In addition, the thresholds at different angles will vary as a function of speed, such that at higher speeds, the thresholds will be lower in regions **3** through **5** than they will be at higher speeds. For example, where two fields of view are provided, one table will contain respective thresholds for pixels in the regions for lower speeds and another table will contain respective thresholds in regions for the higher speeds. Each table will assign an integration time and/or thresholds for use in analyzing different portions of the field of view. Because the greater the distance from the center the greater the viewing angle of the scene image, lowering the threshold in the outer regions increases the system's responsiveness to light sources at wider angles to the controlled vehicle.

Either the thresholds or the integration times for the pixel sensors of the image array, or both the thresholds and the integration times, can be changed to increase the sensitivity of the sensor at different speeds. Thus, it is envisioned that the field of view can be the same at both high and low speeds. However, the thresholds or the sensitivity (i.e., the integration period or the amplifier gain) can be altered such that at low speeds images viewed at wide angles will have little impact on the dimming decision whereas at high speeds the images viewed at wide angles will have substantially more impact on the dimming decision at high speeds. It is further envisioned that instead of using look-up tables, an algorithm can be used to alter the sensitivity of the light sensor as a function of the angle of the image being viewed. Such an algorithm can be used to reduce the memory requirements for the system at the expense of requiring greater processing power to implement the function.

Turning

As indicated above, it is disadvantageous to have a wide field of view when traveling slowly, such as occurs when traveling on back roads. However, when turning, it is necessary to have a wide field of view so that the image sensor can detect other vehicles that will come in front of the controlled vehicle prior to the controlled vehicle's headlamps striking the other vehicle. It may also be desirable to lower the thresholds for those regions of the sensed image in the direction of the turn. A subroutine that the microcontroller **1105** uses for changing the viewing angle of the image sensor is disclosed in FIG. **23**. It is envisioned that the subroutine will be executed each time a turn condition is initiated. For example, the microcontroller may detect any one or more of the following: activation of a vehicle turn signal alone or in combination with braking; a change in vehicle heading detected by the compass; global positioning information; and change in direction of the vehicle steering wheel or front tires. Responsive to such an event, the microcontroller **1105** will input the criteria to be used in making a decision as to whether the field of view needs to be altered. For example, a compass input, an input from a turn signal, global positioning system (GPS) receiver information, wheel turn indication from the vehicle steering

system, vehicle speed, gyroscope output, tire speed sensors of an anti-lock brake system (ABS), or a combination of these inputs may be input in step **2301**. Additionally, motion analysis (discussed below) may be used to sense turning of the vehicle.

In step **2303**, the microcontroller **1105** will determine whether the criteria input in step **2301** indicate that the field of view should be altered. For example, when the vehicle turn signal is ON, and the vehicle is slowing down, the viewing angle sensitivity can be altered in the direction of the turn signal. Alternatively, actuation of the vehicle brake system in combination with a change in vehicle heading greater than a threshold angle of change could trigger a change in sensor viewing angle. In particular, the compass sensor information can be compared to a threshold change of direction to determine if the controlled vehicle **100** is turning, and responsive thereto the microcontroller **1105** can increase the sensitivity of the image sensor **201** and associated circuitry to light sources in the direction that the vehicle is turning. In order to implement such a turning control, the compass must generate vehicle heading information that the microcontroller can use. Commercially available compasses of the type used in vehicles generate an output, which will operate within 2° to 3° of accuracy as the vehicle turns. As a consequence, the rate at which the vehicle heading is changing and the direction that the vehicle is turning can be determined from the compass output or GPS information. In one embodiment, a compass is integrated into an electrochromic mirror with an automatic headlamp dimmer and the compass sensor signal is utilized to enhance the performance of the automatic headlamp dimmer.

If it is determined in step **2303** that a shift of the sensitivity pattern is required, the image sensor will shift its sensitivity as indicated in step **2305**. For example, the high sensitivity region **1** of the image sensor will generally be in the center of the array such that lights straight-forward of the vehicle will have the strongest impact on the light control process. This is particularly advantageous as the brightest light produced by the controlled vehicle illuminates straight out in front of the controlled vehicle. As the controlled vehicle turns, the center axis of each of the regions **1** through **5** will shift as indicated in step **2305**. As a consequence, these regions shift in the direction that the vehicle is turning such that they are centered to the right or left instead of being centered on the Y axis (FIG. **22**). The sensitivity of the pixels in array **301** will thus shift right as the vehicle turns right, and shift left as the vehicle turns left. The degree that the sensitivity field shifts can vary depending upon the rate of change of the vehicle as well as the speed of the vehicle.

It is envisioned that the sensitivity can be changed using the lookup table. In particular the lookup table can contain respective integration periods and thresholds according to the location of pixels such that the sensitivity is as shown in FIG. **22** when the vehicle is traveling straight. As the vehicle turns, the addresses associated with columns of pixels may be altered such that the integration periods and thresholds for pixels in the column will shift left or right.

If the change is not sufficient to change the sensitivity, as determined in step **2303**, the microcontroller will determine in step **2307** if the vehicle is going straight. The microcontroller will continue to monitor the rate of change of the vehicle heading until the vehicle is heading generally straight, as indicated in step **2307**. It will be recognized that subroutine may be run once as an interrupt routine such that other subroutines may be run in between execution of routine **2300**.

It is further envisioned that adjustments may be made in the vertical direction, in addition to the horizontal direction, for example if a change in vehicle inclination is detected.

Light List History

Information about lights from previous frames can be useful in evaluating current frames. However, there is typically insufficient memory in low cost microcontrollers to store previous frames so as to retain a complete history of each frame's content. To minimize the memory requirements for implementing the system, while retaining some useful historical information, the brightness and location of one or more of the brightest lights detected in one or more previous frames are stored for use when processing a later frame. The entire light list from a previous frame need not be stored, unless significant memory is available. It is also useful to store the brightness and location of only the brightest lights detected in one or more preceding frames. This information can be used to provide fast return to bright. After an oncoming car **105** has passed the controlled vehicle **100**, it is useful to return to the high beam state as soon as possible. The night vision of the driver in the controlled vehicle may be temporarily impaired by the lights of the oncoming vehicle. The impact of this loss of night vision may be minimized by providing as much scene illumination as possible, as soon as possible, following passage of a vehicle. The microcontroller **1105** uses the light list history information to implement a fast return-to-bright. In particular, after step **2007** in FIG. **20***a*, the microcontroller **1105** can determine whether the current frame is suddenly clear of bright light sources following a preceding frame that contained a very bright headlamp. In such a case, it is likely that the bright headlamp has just passed the controlled vehicle. If this situation occurs, the normal gradual, delayed fade-in period can be bypassed, or partially bypassed, and the high beams can be incremented by more than one state, such as by eight states (FIG. **19**), to return to bright high beams more quickly.

Another scenario where the opposite result is desired occurs when the controlled vehicle comes up behind a preceding vehicle **110**. As the controlled vehicle **100** approaches the preceding vehicle **110**, the image sensor will detect the preceding vehicle's tail lights and dim the controlled vehicle's high beams responsive thereto. When the controlled vehicle moves to the side to drive around the slower preceding vehicle, the tail lights of the preceding vehicle will move out of the field of view of the image sensor. However, if the controlled vehicle's bright lights are activated, they will shine into the eyes of the driver of the vehicle being passed via the exterior rearview mirror. This is particularly problematic when the controlled vehicle is passing a truck, as it may take a long time to pass the truck. In this situation, the microcontroller can include a decision step following step **2007** to determine whether the previous frame included a tail light, and if so, to set a predetermined delay before the high beam headlamps can be activated. Where the high beam lights are dimmed responsive to preceding tail lights, a long delay will thus be introduced before turning the high beams back ON. For example, the high beams may come on several seconds after the tail lights move out of the scene being imaged. Motion analysis (described below) may be used to determine the rate of overtaking a preceding vehicle or the rate at which a preceding vehicle may drive out of range to thereby enable additional control over the headlamps.

The light history can also be used to select an integration period for the image array sensor pixels. In particular, it is envisioned that the amplifier gain **303** for the pixels can have different gains or different integration intervals to increase the dynamic range of the light sensor. For example, three

different gains or integration periods could be supported. A bright light will saturate all but the lowest gain, whereas a dim light such as a tail light can not be detected at a low gain. The light history can be used to remember that the sensor was washed out even at low gain, and an ultra low sensitivity can be used to detect lights.

Another use for the light list history is determining traffic density. In particular, the traffic density can be ascertained from the time period count between detecting oncoming headlights. Thus, in or near a city where traffic is heavier, the system can respond to that condition by having a relatively long delay period. On the other hand, where traffic is light, such that oncoming traffic is less likely, the delay to turn on the bright lights can be short. It is envisioned that as the traffic increases, the return-to-bright time period will lengthen, whereas as the traffic decreases, the return-to-bright period will shorten. It is further envisioned that a number of different criteria could be used, such as the number of frames since a vehicle was previously detected or the percentage of time that the bright lights were on over a predetermined sampling period. In these ways, the number of objects detected over time can be used in the control of the headlamps, and in particular, to at least partially inhibit turning on the high beams. It is envisioned that where a vehicle includes an electrochromic mirror glare sensor to detect light from the rear of the vehicle, or any other device having a rearward directed optical sensor, such as a rear vision system, additional information can be accessed which is useful for controlling the return-to-bright interval. In particular, when the bright headlights are dimmed because of tail lights from a preceding vehicle, the headlights can return to bright a predetermined time after the tail lights disappear from in front of the vehicle or when headlights are detected by the rear glare sensor in the rearview mirror, whichever occurs first. Where headlights from a trailing vehicle are detected immediately prior to the disappearance of tail lights from a preceding vehicle, the use of the rearward sensor for detecting a return to bright condition will be precluded. Additional considerations can be used in making the return-to-bright decision. For example, a minimum and a maximum interval can be required before return-to-bright.

It is envisioned that the system will only provide a variable return-to-bright interval under certain conditions, such that the return-to-bright interval will typically be a default time interval. However, a fast return-to-bright interval will occur following a condition where really bright headlights are detected and then disappear, as such bright lights will reduce the driver's night vision. Additionally, a slow return to bright condition would be used following disappearance of a preceding tail light since the driver's vision will not have been impaired and it is desirable to avoid shinning the high beams into the eyes of a vehicle being passed.

It is further envisioned that integration periods in the current frame may be adjusted based upon measurements made in a previous frame. In particular, an extremely short integration period can be used for the image sensor **301** where the lowest sensitivity measurements in a previous frame resulted in saturation of the light sensor. To the other extreme, where the previous frame's most sensitive measurements did result in detection of tail lights, a very long integration interval can be used for the image sensor **301** to look for tail lights in the current frame. Thus where three integration periods are typically used, two additional integration periods can be selectively used when the conditions necessitate either an extremely short or long integration interval.

Another use of the light list history is to distinguish signs and reflectors based on the movement of the objects in the image over time. Over a sequence of frames, reflectors and signs will typically move more rapidly toward a side of the image than will vehicles traveling generally in parallel with the controlled vehicle. Object lists may be created as the images are captured as disclosed above and in commonly assigned U.S. patent application Ser. No. 09/799310, entitled IMAGE PROCESSING SYSTEM TO CONTROL VEHICLE HEADLAMPS OR OTHER VEHICLE EQUIPMENT, filed on Mar. 5, 2001, by Joseph Stam et al., the entire disclosure of which is incorporated herein by reference. The object lists created may be stored in memory from frame to frame to determine the behavior of a particular object in the image over time. For instance, reflections from signs or other stationary objects can be identified by the motion of this object in subsequent frames. Flashing overhead stop or caution lamps can be identified by their rate of flashing. After each frame is analyzed, the object least created from this frame is kept in memory and light lists from new frames are stored in a different location. The techniques disclosed in U.S. patent application Ser. No. 09/799310 greatly reduce the amount of memory required for image analysis by not requiring an entire frame to be stored. Therefore, it is practical to store the object lists from several subsequent frames in the amount of memory typically provided in low cost controllers. The number of object lists stored from previous frames depends on the available memory. As few as one previous object list can greatly assist in identifying the motion of an object.

To facilitate tracking of objects over time, additional properties of objects can be added as entries into the object list. For a headlamp control application, an object list entry may contain:

X Center	X coordinate of the center of the object
Y Center	Y coordinate of the center of the object
Total GV	Sum of all the gray scale values of all pixels in the object
Size	Total number of pixels in the object
Max	The gray scale value of the brightest pixel
Redness	Brightness ratio between the clear and the red images for this object
PrevFrameIndex	Index of a light in a previous frame which is the same light as this one (if any)
Gain	Which image in the cycle; high, medium, or low gain
Vector	The direction in which the light is traveling

The total number of objects that can be stored depends upon the available memory. For example, the list above would require 9 bytes per entry. If, for example, 500 bytes of memory are available, 50 objects could be tracked. The object list memory may be allocated as a contiguous array of object entries. Pointers indicate the start of the object lists for the current frame and previous frames. The newest objects identified replace the oldest objects in the list.

The objects in the new object list are then compared to the objects in the previous object list to determine if any of the new objects are the same as previous objects. A comparison is made by determining if the X and Y center of an object in the current list is within a radius of a certain number of pixels from an object in the previous list. The radius threshold is determined by calculating the maximum amount an object can reasonably move in an image from frame to frame. This number is a function of the resolution of the sensor and may also be a function of the vehicle speed and turn rate. It is possible for two lights in the current list to be

daughters of the same light in the previous list. This may occur as a vehicle approaches from a distance and the two headlamps, which before were imaged as one blob, become separated in the image.

Once an object in a previous light list is determined to be the same object as in the current light list, a motion vector can be computed to quantify the rate and direction of motion of the object. Motion detection can be used to distinguish between signs and reflectors, street lights, and vehicles. As illustrated in FIG. **39**, the headlights **3901** of oncoming vehicles tend to move down and to the left of the image over a sequence of frames, while signs and reflectors **3903** tend to move down and to the right. Overhead street lights **3905** tend to move upward. While other techniques are disclosed herein for distinguishing between these objects, motion detection can further increase the accuracy at which the system is able to make such distinctions.

Further, such motion detection can be used to distinguish between headlights and tail lights of vehicles and thereby further enhance distinction that is otherwise based on color analysis.

FIG. **40** shows a functional block diagram of one embodiment of the present invention.

As shown, the system **4000** includes an image sensor **201**, an lens **202**, a previous light list(s) **4001**, and an image processing routine (seed fill) **4003**, which receives data from image sensor **201** and accesses previous light list(s) **4001** to generate a new light list **4005**. New light list **4005** includes information from which various parameters including the brightness **4007**, position **4009**, size **4011**, color **4013**, AC component **4015**, and motion **4017** of each object may be derived. The system **4000** further includes decision rules **4020** that control the exterior vehicle lights including the low beam headlamps **4021** and the high-beam headlamps **4023** by adjusting their activation state, brightness, aim, and/or focus to vary the illumination pattern produced thereby. Decision rules **4020** may control the exterior lights as a function of any one or combination of parameters **4007–4017** as well as ambient light levels **4025**, vehicle turn rate **4027**, vehicle speed **4029**, and the state of user actuated switches **4031** (as discussed further below). Decision rules **4020** may be implemented in a logic circuit (i.e., microcomputer), a fuzzy logic circuit, or a neural network.

An example of how decision rules **4020** may use more than one parameter to control the exterior lights is to reduce the perceived brightness or otherwise modify the glare area of the present beam illumination pattern when a nearby headlamp is detected. Decision rules **4020** may determine that a nearby headlamp is present when the detected headlamp has high brightness and a relatively high amount of motion. A distant headlamp, on the other hand, would have low brightness and a relatively low amount of amount of motion. A sign would have a low level of brightness but have a relatively high amount of motion.

Automatic Aim Calibration

Variations in the orientation of the image array sensor relative to the windshield angle may result in variations in aim of the sensor, which may negatively impact the performance of the dimmer. These variations can be calibrated out over time using a maximum bound placed on the expected variation in mounting. In general, on straight roads, distant oncoming headlamps will be coming from directly ahead of the optical sensor system **102**. The calibration system uses faint headlamps detected near the center of the image, and preferably only those within a center window corresponding to the expected mounting variations. Such headlamps meeting certain criteria will have their position averaged with other faint headlamps meeting the same criteria. Over time, this average of these lights should correspond to the center of the field of view. This average value can be used to offset the image window relative to the X and Y-axis in FIG. **22**.

More particularly, in order to detect a flat straight road, from which a misalignment of the optical sensor system can be detected, a variety of different orientation inputs can be used. The speed of the vehicle may be required to remain in a certain range between 35 to 50 mph. The vehicle can be determined to be traveling straight using the compass, GPS, or monitoring the operation of the vehicle steering system. If the heading changes during the test, the measurement will be considered to be in error. If the vehicle has equipment for providing an elevation measurement, any changes in the vehicle's elevation during the calibration process will result in an error. The elevation measurement may thus be used in determining whether to adjust the field of view.

A distant vehicle is initially detected by sensing white light near the center of the image, which is faint at the highest sensitivity (longest integration period) of the image sensor. As this light gets brighter, the system monitors the orientation inputs to detect whether the road continues to be flat and straight. If it remains flat and straight for a period of time which is at least twice the time period required for the vehicles **100**, **105** to pass, the measurement will be valid. The center point detected initially will then be averaged with previous valid measurements, and the average measurement will be considered to be the center of the image.

This will be the average X and Y coordinates, which together will mark the center of the image sensor. This location can be saved in EEPROM or flash ROM.

Another method of aiming calibration is to take a very high gain image and look for the reflection of the road. The average point where this reflection occurs can be used to calibrate the aim.

Liquid Crystal Filter

An alternative optical system may include a liquid crystal filter **2405** that can be used to selectively provide both a red and a blue filter, whereby red and blue images may be viewed by an image sensor **2401** through a single lens structure **2403**. In such a structure, the image sensor **2401** need only have one imaging area (e.g., array area **702** instead of array areas **702** and **703** as required with two lenses). The filter **2405** is implemented using a liquid crystal colored light switch **2503** (FIG. **25**) electrically connected to microcontroller **1105** through conductors **2413** and **2411**. The filter includes a neutral polarizer **2501**, a liquid crystal shutter **2503**, a red polarizer **2505**, and a blue polarizer **2507**. The neutral polarizer **2501** and red polarizer **2505** are oriented with their polarizing axis aligned in one direction and the blue polarizer **2507** is oriented with its polarizing axis oriented orthogonally to the red and neutral polarizer. The liquid crystal shutter **2503** is implemented using a twisted neumatic (TN) liquid crystal shutter selectively energized under the control of microcontroller **1105**. In particular, when the shutter is not energized, the liquid crystal device transmits the red light. When the liquid crystal is energized, the liquid crystal device transmits blue light.

It is thus possible to measure the relative intensities of two colors of light using a single photo sensor or image area. In the unenergized state all visible light is polarized in the horizontal direction by the neutral polarizer, rotated 90° by the unenergized TN liquid crystal cell to the vertical

direction, and then all but the red light will be absorbed by the horizontal red polarizer. The red light will then pass through the vertical blue polarizer. In the energized state all visible light will be polarized in the horizontal direction by the horizontal neutral polarizer, and not rotated by the energized TN liquid crystal cell, all visible light will be transmitted by the horizontal red polarizer and all but blue light will be absorbed by the vertical blue polarizer. The liquid crystal device can be used as a high-speed light switch to alternate between transmission of blue light and red light. The relative intensities of the red and blue light components of an object or light source can then be determined. Alternatively, a green polarizer can be substituted for either the red or blue polarizer to switch between transmission of blue and green or red and green light respectively. Furthermore, a clear polarizer can be substituted for the blue polarizer to switch between red and clear.

Windshield Wiper

To improve dimmer performance when it is raining, it is useful to synchronize the acquisition of images with the windshield wipers. For example, a signal can be provided from the wiper motors to indicate the position of the wipers. Immediately after the wiper passes over the sensor, and image can be taken to look for cars. Most importantly, it is necessary to avoid taking images while the wiper is over the image sensor **301**.

Where the controlled vehicle **100** includes a moisture sensor, the moisture sensor can monitor the windshield wiper. A moisture sensor providing such information is disclosed in U.S. Pat. No. 5,923,027, entitled MOISTURE SENSOR AND WINDSHIELD FOG DETECTOR, issued to Joseph Stam et al. on Jul. 13, 1999, the disclosure of which is incorporated herein by reference.

Information regarding the on/off status of the windshield wipers may also be used to control the vehicle headlamps. When the headlamp controller determines that the windshield wipers have been turned on, the headlamp controller may turn on the low beam headlamps of the vehicle assuming they are not already on. In addition, the headlamp controller may disable the headlamps from operation in a high beam state when the vehicle windshield wipers are activated. This may be accomplished by simply maintaining the headlamps in the low beam state when in an automatic control state or otherwise deactivating the automatic control state such that the high beams may not automatically be turned on while the wipers are activated. Additionally, the headlamp controller could disable any manual activation of the high beams so long as the windshield wipers are turned on. Also, foul weather lights, particularly the fog lights, may be automatically activated when the wipers are on.

The headlamp controller may receive a signal over the vehicle bus from the windshield wiper controller indicating that the windshield wipers are activated. Alternatively, the headlamp controller may determine that the windshield wipers are activated upon detecting a wiper within the scene imaged by the imaging system. As yet another alternative, the headlamp controller may receive a signal from a rain sensor that is used to control the windshield wipers indicating that a control signal has been transmitted to activate the windshield wipers.

Deceleration

In addition to varying the image sensor operation depending upon the vehicle speed, other speed criteria can be used to control the operation of the vehicle headlamps. Turning on the high beams may be inhibited when the vehicle is decelerating, when the brakes are actuated, or when the vehicle is traveling slowly. This prevents high beams from coming on when coasting to a stop or approaching an intersection. Deceleration can be detected from the speed input to the microcontroller **1105** (FIG. **11**).

Bad Pixel Calibration

An image sensor may contain one or more bad pixels. These bad pixels may manifest themselves as extremely sensitive pixels, which may cause "white-spots" in the image. Such "white-spots" will cause false light detection in the image if the sensor is not calibrated to remove them from calculations. During production tests, the location of these white spots can be measured and stored in a programmable memory associated with microcontroller **1105**. To compensate for such bad pixels during normal operation of the image array sensor, after an image is acquired, the pixel value at the white-spot location may be replaced with the average value of its neighboring pixels.

It is possible that a white-spot may form during use of the image sensor, such that it is not detected during production tests. Such a situation will cause the device to be inoperable. To avoid this problem, it is desirable to calibrate the white-spot out of the image after recognizing the bad pixel. In order to detect the white spot, it is necessary to detect that the pixel remains "lit-up" in several images, and preferably over an extended period of time. A bad pixel will stand out if it is repeatedly lit-up when neighboring pixels are dark. When such a pixel is detected, it can be added to the list of bad pixels.

It is envisioned that bad pixels can be periodically tested to determine if their performance has improved. This can be accomplished by monitoring a sequence of images to determine whether the center pixel is dark while the adjoining pixels are not dark.

"Picket Fence"

In controlling the vehicle headlamps, it is desirable to avoid a condition where the headlamp high beams flash ON and OFF at a relatively rapid rate, this is particularly important if non-variable two-state headlamps are used. For example, a sign along the road can cause flashing of the headlights between bright and normal levels. This occurs when reflections of the bright high beams from a sign are bright enough to cause dimming of the high beams and reflections of headlight low beams are low enough that the bright high beams are turned ON. The condition can be avoided by having the system look at the object that caused the high beams to turn OFF. When this condition occurs, the light level at that position is ignored while the pixels around the object are not ignored for a predetermined number of cycles, such as ten cycles. The length of time that the object is ignored can be variable as a function of the vehicle's speed. The higher the vehicle's speed, the shorter the period that the object will be ignored.

During the time period, the lights will be controlled using pixels other than those associated with the object being ignored.

A reflector can be distinguished from an active source of light by flashing the vehicle headlights off. The time period that the headlights are off is so short that the image sensor can sense the loss of light even though the human eye will not perceive, or barely perceive, that the lights were off. A light emitting diode headlamp described hereinbelow can be turned OFF and ON very rapidly, such that it will be off for

such a short period of time. In operation, the microcontroller **1105** controls the headlamp high or low beams to turn OFF, and controls the image sensor to image the scene during that brief time period that the headlamps are off. The off time period may for example be 10 ms.

Fog Detector

It is desirable for the vehicle to reliably detect a foggy condition, and in response thereto, to automatically turn ON or OFF front and rear fog lamps. Effective fog detectors have not been available heretofore. Fog may be detected by using the image sensor and optical system for the headlight ON/OFF and headlight dimmer control. Fog can be detected by a reduced scene contrast along with scene ambient light level determinations. The ambient light can be determined from the mean gray scale value of the pixels imaging the forward scene or by a separate ambient light sensor, such as the ambient light sensor used for the electrochromic mirror. It is envisioned that the mean can be a clipped mean value. The variance of the gray scale values of the pixels provides a measure of the contrast in the image. Alternatively, the variance can be determined from the standard deviation of the pixels, and in particular, when the standard deviation is less than a standard deviation threshold level, the presence of fog is identified responsive to which the fog lights can be turned ON. Alternatively, the individual differences between the average pixel level and each individual pixel level can be added for the entire image sensor, and when this total variance exceeds a variance threshold level, the presence of fog is detected. Either of these examples of fog criteria can be used as a measure of contrast.

Several additional factors may also be considered. The contrast value may be an average contrast value over several images. The contrast may be determined in row-wise fashion to determine the level of fog. Various regions of the scene may be considered independently. If two color lenses are present as in the headlamp dimmer, color information may be used. The actual values of the brightness/contrast ratios and the proper image sensor exposure times should be determined experimentally. The device can be set to only operate between a predetermined range of brightness levels, such that if the ambient level is too high or too low, the fog detector will not operate, and manual override will be required. The ambient light conditions for fog may for example be between 1 and 1000 lux. Both the image sensor and the ambient light sensor can be used to detect fog. If the ambient light level detected by the ambient light sensor is within the appropriate range, an image of the forward scene is acquired with a sensitivity set to the average gray scale value of the pixels (e.g., 128 lux). If the contrast at a given brightness level is below a predetermined threshold level, it is determined that fog is present.

Snow And Fog Detector

It is also desirable for a vehicle to detect when it is snowing. Typically, in heavy snow conditions, it is not desirable to activate the high beams. Further, even if it is not snowing heavily, the snow may reflect the light from the high beams in such a way that the headlamp controller mistakenly perceives an oncoming vehicle based upon the reflected light from the controlled vehicle's own headlamps.

To detect snowfall, it is preferable to provide a sensing system that senses light levels forward and above the vehicle. To obtain the light level above the vehicle, a separate light sensor may be positioned to sense light from the sky above the vehicle. Such a sky sensor may include a single pixel sensor positioned at a 45° angle relative to the sensor used to sense light forward of the vehicle. The sensor used to sense light forward of the vehicle may be a single pixel sensor or the image array sensor used to image the scene forward of the vehicle for headlamp control. The values sensed by the forward and sky sensor may be averaged over a period of time. Theses sensors may be constructed in accordance with the teachings of U.S. patent application Ser. No. 09/307,191, entitled PHOTODIODE LIGHT SENSOR, filed on May 7, 1999 by Robert H. Nixon et al. and U.S. patent application Ser. No. 09/491,192, entitled VEHICLE EQUIPMENT CONTROL WITH SEMICONDUCTOR LIGHT SENSORS, filed on Jan. 25, 2000, by Jon H. Bechtel et al., the entire disclosures of which are incorporated herein by reference.

The controller is coupled to receive the output of both the forward sensor and the sky sensor and compares the relative brightness in front of the vehicle with that above the vehicle. In some conditions, it may be desirable to compare the relative brightness as the brightness of the vehicle's headlights increases. The headlamp controller determines that it is snowing or foggy when a ratio of the relative brightness forward of the vehicle to that above the vehicle reaches a threshold as the brightness of the vehicle's headlights increases due to the reflection of the headlamp light off the snow in the forward scene.

When the controller determines that snow is falling, it may activate the low beam headlamps if they are not already activated and can disable the high beams from being activated either through automatic control or manually. Further, automatic control may be disabled and foul weather lights may be activated. Additionally, the brightness of the vehicle's tail lights and/or brake lights may be increased to increase the visibility of the vehicle to other rearward vehicles.

The headlamp controller may also infer that the conditions outside of the vehicle are snowy or foggy when the driver turns the front windshield defroster fan to full speed. In such an event, the controller may also disable the headlamps from operation in a high beam state and may disable further automatic control.

The techniques described in this section are particularly well-suited for detecting fog at night, while the techniques described in the preceding section is better suited for detecting fog during daytime.

Daytime Running Light and Tail Light Control

As discussed above, daytime running lights (DRLs) are provided on some vehicles. As also discussed above, DRLs are provided by operating the high beams at a reduced intensity by changing the PWM drive signal delivered to the high beams during daylight conditions. For this purpose, an ambient light sensor **1107** can be used to determine daylight conditions and switch the headlamps to DRL operation when daylight is detected.

The controller may also utilize the sensed ambient light level to turn on the low beams when it is sufficiently dark. Additional the DRLs may be controlled to vary their intensity during daylight conditions. Ambient light levels may vary considerably from the brightest of daylight conditions to the conditions existing just prior to activation of the low beam headlamps at dusk. There have been complaints about the brightness of DRLs when the ambient light levels are relatively dark. In the brightest conditions, however, the DRLs are less bothersome because they appear to be less bright relative to the ambient light levels surrounding the

vehicle. Accordingly, the headlamp control circuit may be configured to vary the brightness of the DRLs in response to the ambient light levels sensed by an ambient light sensor. Specifically, the control circuit may increase the brightness of the DRLs in response to increasing ambient brightness.

A similar problem exists with respect to a vehicle's tail lights and brake lights. Tail lights and brake lights preferably have brightness levels that are sufficient to allow drivers to the rear of the controlled vehicle to easily determine whether the tail lights and brake lights are on or off regardless of the ambient light level. On the other hand, at nighttime, tail lights and brake lights can be too bright so as to adversely affect the night vision of drivers to the rear of the vehicle. Accordingly, it is preferable to decrease the intensity of tail lights and brake lights with decreasing ambient light levels. Such intensity variation may be continuous or accomplished in discrete steps. Additionally, it may be desirable to increase the intensity of the tail lights and/or brake lights when foul weather, such as rain, fog, or snow, is detected.

User Control and Feedback

An alternative embodiment of the present invention is shown in FIG. **34**. The same reference numerals are used to illustrate common elements as in the embodiment shown in FIG. **11**. Like the embodiment shown in FIG. **11**, this alternative embodiment shown in FIG. **34** includes an image sensor chip **201** and a lens **202** preferably mounted in a mirror mount **1003**. A compass sensor **1135** is also preferably mounted in mirror mount **1003**. The compass sensor may alternatively be mounted in mirror body **1000**. A microcontroller **1105** is preferably mounted in mirror body **1000** and is coupled to image sensor chip **201** and compass sensor **1135**. Mirror body **1000** may further include an electrochromic element **1102** and a compass display **3404**, both of which may be controlled by microcontroller **1105**.

A forward-facing ambient light sensor **1107** and a rearward-facing glare sensor **1109** are also preferably provided in mirror body **1000**. Additionally, a sky sensor **3402** may be provided in mirror housing **1000**, which is inclined at an angle to view the scene of the sky above and slightly in front of the vehicle. Such a sky sensor **3402** may be used for detecting snow or other ambient light conditions. Sky sensor **3402** may be a single pixel sensor or may optionally be incorporated in the mirror mount as an optical element that images a view of the sky onto a designated area of the image sensor chip. Such a structure is disclosed in commonly assigned U.S. Pat. No. 6,130,421. The disclosures of the above-mentioned patent and patent application are incorporated herein by reference.

Microcontroller **1105** is coupled to the vehicle bus **3406** for exchange of various information and control signals. As indicated, a switch control module **3408** may be coupled to the bus for providing the states of various switches that may be manipulated by the user to microcontroller **1105**. For example, a high/low beam switch **3410** may be coupled to switch control module **3408**, as may be a headlamp on/off switch **3412**. Such switches are common in vehicles with the high/low beam switch typically being mounted to the steering wheel column and the headlamp on/off switch being positioned on the vehicle instrument panel.

The present invention also provides for a user sensitivity selection switch **3414** that is coupled to switch control module **3408** to allow a user to adjust the sensitivity of the headlamp control system. Microcontroller **1105** may respond to changes in the sensitivity setting set by the user by adjusting the thresholds that the microcontroller utilizes to compare to detected light sources to determine when to turn off or on or fade in or out the high beams. Alternatively, microcontroller **1105** may utilize the sensitivity setting to change the rate at which it changes headlamp brightness states or may change the duty cycles associated with those states. Further still, microcontroller **1105** may adjust the sensitivity by changing the integration time of some or all of the pixels in the CMOS image array sensor. Also, the sensitivity to light in various portions of the scene in front of the vehicle may be adjusted by varying the thresholds/integration times for pixels in the image array sensor that image the peripheral regions of the forward scene. Other adjustments may also be programmed into microcontroller **1105** to determine how it should respond to adjustment of a user-sensitivity switch **3414**.

As will be explained further below, the present invention also provides for the inclusion of an automatic headlamp control on/off switch **3415** by which a user may disable the automatic control of the vehicle headlamps.

Also coupled to vehicle bus **3406** is a lighting control module (or body controller) **3416**, which controls the state and possibly the perceived brightness of the low beam headlamps **3418**, the high beam headlamps **3420**, and the brightness of the tail lights **3422**. Front control module **3416** may also be used to control the on/off status or perceived brightness of fog lamps. As mentioned above, the brightness of daytime running lights may be adjusted by controlling the perceived brightness of high beams **3420**.

FIG. **35** shows a state diagram for operation of microcontroller **1105** in response to various states of the switches coupled to switch control module **3408**. As illustrated, the microcontroller **1105** may operate in an automatic mode or a manual mode in response to the activation of the automatic control on/off switch **3415**. Such a switch may be provided on the steering wheel column and integrated into the same column switch that is utilized to manually activate the high beams. For example, if such a column switch is in a middle position, microcontroller **1105** will operate in a manual mode. If, for example, this column switch is moved to a forward position, microcontroller **1105** will respond by entering an automatic control mode. As discussed above, during an automatic control mode, microcontroller **1105** varies the headlamp state between a high beam on state **3502** and a high beam off state **3504** based upon the light sources detected by the image sensor or upon other events. In the manual mode, however, the headlamps are operated manually in a conventional manner. For example, the high beams may initially be in an off state **3508** and be turned on by manual toggling of the column switch or other mechanism such that the high beams are in an on state **(3510)**. Toggling a switch back would turn the high beams off. If the column switch includes a flash-to-pass feature, flashing the column switch would temporarily turn the high beams (on state **3512**) whereas when the user releases the column switch, the high beams are turned off and returned to state **3508**.

FIG. **36** shows a state diagram showing a more complex control scheme. As with the control scheme shown in FIG. **35**, microcontroller **1105** may operate in either an automatic mode or a manual mode. Transition between the automatic or manual modes is generally manually selected using a switch **3415** that may, for example, be provided on the steering wheel column or on the vehicle instrument panel. In the manual mode, microcontroller **1105** operates in the same manner as described above with respect to FIG. **35**. In the automatic mode, however, microcontroller **1105** initially operates in an automatic high beam control state **3602** whereby the high beams are automatically controlled to

transition between on and off states, as well as states of intermediate brightness if the headlamps are capable of this feature. When operating in the automatic mode in accordance with the scheme shown in FIG. **36**, when a user toggles the column switch **3410** for manually turning on the high beams, microcontroller **1105** turns on the high beams in a manual override state **3604** until such time that the user again toggles the column switch, at which point microcontroller **1105** returns to the automatic high beam control state **3602**. In the event that the user manually activates the flash-to-pass column switch, microcontroller **1105** enters the high beam on flash-to-pass state **3606** and remains in this state so long as the flash column switch remains in the flash-to-pass position. Once the user releases the flash-to-pass column switch, microcontroller **1105** returns to the automatic high beam control state **3602**.

While the high beams may be activated in their brightest state during the flash-to-pass state, it will be appreciated that, according to one embodiment of the present invention, the brightness of the headlamps during a flash-to-pass state may be less than full brightness. Specifically, the brightness of the headlamps during a flash-to-pass state may be varied as a function of the sensed ambient light level and also as a function of the current brightness level of the headlamps. In this manner, any time the flash-to-pass switch is actuated, the perceived brightness of the headlamps will be increased by a predetermined increment above that of their current brightness level so as to provide a perceivable increase in the brightness of the headlamps to any preceding vehicles, but without causing a sudden and excessive glare in the eyes of the drivers of such vehicles.

FIG. **37** shows yet another state diagram for a more complex control scheme. Again, microcontroller **1105** operates in either an automatic or a manual mode. When in the manual mode, microcontroller **1105** allows the headlamps to be controlled in the same manner as discussed above with respect to FIGS. **35** and **36**. Again, operation in either the automatic or the manual mode may be manually selected by the user by manipulation of a switch **3415**.

When in the automatic mode, microcontroller **1105** operates in an automatic high beam control state whereby the control state varies between a high beam on state **3702** and a high beam off state **3704**. Microcontroller **1105** moves between states **3702** and **3704** in the manner discussed above responsive to the light sources detected by the image sensor. When microcontroller **1105** is operating in an automatic mode with the high beams on (state **3702**) and then the column switch **3410** is toggled, microcontroller **1105** will interpret the toggling of the column switch as a request to turn the high beams off. Microcontroller **1105** thus enters a high beam off manual override state **3708**. Microcontroller **1105** will maintain the high beams in their off manual override state **3708** for a predetermined time period, such as **30** seconds or until the column switch is again toggled. When the time period expires, microcontroller **1105** will initially maintain their high beams in the off state, but will move to state **3704** whereby the high beams may be automatically turned back on based upon the automatic headlamp control algorithm that is responsive to the light sources detected by the image sensor. If microcontroller **1105** is in the high beam off manual override state **3708** and the column switch is again toggled, microcontroller **1105** will interpret this action as a request by the user to move to a high beam on manual override state **3706**. Microcontroller **1105** will maintain this manual override high beam on state **3706** for a predetermined time period, such as 15 seconds, or until the column switch is again toggled. If the column switch is again toggled, microcontroller **1105** will move to the high beam off manual override state **3708**. Microcontroller **1105** will leave state **3076** and will enter state **3702** when the timer expires so as to initially maintain the high beams in their on status but allow for the automatic control algorithm to dim or turn off the headlamps in response to light sources detected by the image sensor.

If microcontroller **1105** is operating in the automatic control state with the high beams off (state **3704**) and the column switch is toggled, microcontroller **1105** will interpret this as a command to enter the high beam on override state **3706**. Microcontroller **1105** will then leave the high beam on manual override state **3706** based on the criteria discussed above.

If microcontroller **1105** is operating in the automatic control state with the high beams off (state **3704**) and the user manually activates the flash-to-pass column switch, microcontroller **1105** will move to state **3710** by which the high beams are turned on in a flash-to-pass state. The high beams will remain on so long as the user holds the column switch in the flash-to-pass position. Once the user releases the flash-to-pass column switch, microcontroller **1105** will return to the automatic mode with the high beams off (state **3704**). If the microcontroller is in the automatic control states with the high beams already on (state **3702**), at such time that the user activates the flash-to-pass column switch, the high beams will remain on in state **3710** so long as the user holds the column switch in the flash-to-pass position. However, once the user releases the column switch, microcontroller **1105** returns to state **3704** rather than state **3702** so as to turn the high beams off. If conditions warrant, headlamp controller **1105** will turn the high beams back on under automatic control.

Other features that may be implemented would allow the automatic headlamp controller to gradually fade the brightness of the headlamps at such time that the headlamp switch **3412** is turned to an off position or if the vehicle ignition is turned off. Alternatively, the headlamp controller may fade the headlamps a designated time after it is detected that all occupants (or just the driver) have exited the vehicle. Such fading provides the benefits of illuminating the area in which the vehicle occupants will exit the vehicle. By fading the lights in this manner, rather than leaving the lights on in their full brightness states for a fixed time period, it is less likely an observer would suggest to the driver or other occupants that they had left their vehicle lights on since that observer would be able to see the fading of the headlamps during such time period.

Referring back to FIG. **34**, an instrument control panel module **3424** may be coupled to vehicle bus **3402**. An indicator **3426** may be coupled to instrument panel control module **3424** so as to receive control signals from microcontroller **1105** over vehicle bus **3406**. Typically, vehicles have had a single indicator, often a blue light, which is activated when the vehicle's high beams are in an on state. Such single indicator, however, does not provide a user with any feedback as to the relative brightness of the high beams when they are controlled automatically by a headlamp controller to have various intermediate brightness levels. To provide such feedback, the system may be configured such that indicator **3426** has a brightness that varies in proportion to the brightness level of the headlamps. Such variance may be along a continuum or may change in noticeable incremental steps. The brightness of indicator **3426** may also be doubled or increased significantly when the headlamps are in a high beam state as a result of manual activation of the high beams so as to provide the user with a clear indication

that the system has appropriately responded to such manual activation. Another alternative indication scheme is to have the indicator change color as a function of the brightness of the headlamps. Yet another indication scheme is to configure indicator **3426** to include a scale that indicates a relative brightness of the headlamps. Such a scale may be provided as a multi-segmented display, such as the exemplary display shown in FIG. **38** in which the number of segments that are illuminated correspond to the relative brightness of the headlamps. Thus, for example, headlamp icon segment **3802** may be illuminated at all times that the headlamps are on and the various segments **3804–3812** are independently activated with the increasing brightness level of the headlamps. In addition, the color of the indicator shown in FIG. **38** may change to indicate manual activation or operation in either the manual or automatic modes or to indicate operation of the low beams, DRLs, fog lamps, etc. Another way to indicate to the driver that the headlamp controller is operating in an automatic control mode is to provide an indicator light in the auto/manual select switch **3415** such that when the user depresses the auto/manual select switch **3415**, a light within or near by the switch is activated. Other indication techniques known in the art may similarly be utilized.

As discussed above, the vehicle headlamps may be operated in a super-high beam state in accordance with the laws of the various countries in which the vehicle may be used. Such super-high beams have been proposed to have an intensity of greater than 75,000 cd at 0° vertical and horizontal. Such super-high beams have been approved for use in Europe and found to be beneficial. In the event the vehicle is equipped with this capability and the appropriate headlights, the control circuit may control the super-high beams to be activated when it detects that the vehicle is above a predetermined speed level. In this manner, the super-high beams can most typically only be activated when the vehicle is operated on an expressway.

Additionally, if such super-high beams are provided, the system may be programmed to have increased sensitivity to light sources detected forward of the vehicle. The super-high beams may also be faded as light sources are detected as coming closer to the vehicle.

As shown in FIG. **34**, microcontroller **1105** may be coupled to a GPS receiver **3450** via vehicle bus **3406**. Microcontroller **1105** may receive information from GPS receiver **3450** that is indicative of the location and possibly the direction of travel of the vehicle. GPS receiver **3450** may be part of a navigation system or may be part of any other system in the vehicle. The GPS receiver and antenna may be mounted to the rearview mirror assembly as disclosed in commonly assigned U.S. Pat. No. 6,166,698, the entire disclosure of which is incorporated herein by reference.

The information received from GPS receiver **3450** may be in a form that already identifies the location and direction of the vehicle or it may be in the form of information received directly from the satellites from which the location would need to be computed by microcontroller **1105**. If GPS receiver **3450** is part of a navigation system, the navigation system may process the information from the GPS receiver and provide exactly the information needed by microcontroller **1105**. Such information may include, for example, an indication whether or not the road that the vehicle is currently traveling on is a residential road, a divided highway, or an expressway. Microcontroller **1105** may then utilize this information to control the exterior lights on the vehicle. Specifically, microcontroller **1105** may prevent actuation of the vehicle high beams or the super-high beams when the vehicle is traveling on a residential road. Microcontroller **1105** may also disable the super-high beams except when the vehicle is traveling on a divided highway or expressway. The location of the vehicle may also be utilized to automatically enable or disable the super-high beams based upon a determination of whether the vehicle is located in a country, state, or municipality that permits (or prohibits) the use of such super-high beams. Additionally, the location of the vehicle may be used to determine whether the vehicle is presently driving in a region where vehicles are driven on the left hand side of the road or in a region where vehicles are driven on the right hand side of the road.

Led Headlamps for Headlamps Steering and Headlamp Flashing

It has long been considered to be desirable to provide headlamps that can be steered in the direction that the vehicle is turning. It is also desirable to provide forward lighting that can be turned OFF, or substantially attenuated, for such a short period of time that the driver does not notice that the lights are OFF. In this way, reflections do not exist during image acquisition. Although a light emitting diode (LED) lamp can be used to provide these features in a cost-effective manner, LED lamps producing enough light to implement a vehicle headlamp are not commercially available. LEDs suffer from a number of disadvantages that limit their application in vehicle headlamps, not the least of which are the relatively small amounts of light produced by LEDs and manufacturability limitations when incorporating LEDS having exotic constructions. Because of these disadvantages, LED lamps have not been used to implement a vehicle headlamp despite the fact that LEDs are more rugged, more energy efficient, and significantly longer lasting than other light technologies. Additionally, means of producing white light from LEDS have only recently become practical as discussed in U.S. Pat. No. 5,803,579, entitled ILLUMINATOR ASSEMBLY INCORPORATING LIGHT EMITTING DIODES, issued to John K. Roberts et al. on Sep. 8, 1998, the disclosure of which is incorporated herein by reference.

An LED headlamp **2600** is disclosed in FIGS. **26***a* and **26***b*. The LED headlamp can be used to very briefly flash OFF, or dim, the headlamps during an image-sampling interval. The LED headlamp **2600** includes a heat extraction member **2601** that serves as a support for mounting semiconductor optical radiation emitters **2603**, **2605**. Where the semiconductor optical radiation emitters **2603**, **2605** are electrically connected to the heat extraction member, the heat extraction member provides an electrical connection to the semiconductor optical radiation emitters in addition to providing a thermal path for removing heat generated within the semiconductor optical radiation emitters during operation. It is envisioned that the emitters **2603**, **2605** can be electrically isolated from the heat extraction member such that the heat extraction member only provides a thermal path. Each of the emitters **2603** is connected to electrical conductor strip **2607** through a wire bond **2609** and a resistor **2611**. Each of the emitters **2605** is connected to electrical conductor strip **2613** through a bonding wire **2615** and a resistor **2617**.

The heat extraction member **2601** may be constructed of any suitable material, and may be formed in any desired configuration. The front face of the illustrated heat extraction member is generally rectangular in shape, including 33 wells, each of which receives semiconductor optical radiation emitters **2603**, **2605**. The back of the heat extraction member includes fins **2621** that provide a large surface for thermal dissipation to the ambient air. It is envisioned that

the heat extraction member may alternatively have other configurations which enable light steering, such as being generally convex, shaped like a portion of a cylinder side wall, an elongate bar to extend across the front of the vehicle, or a plurality of joined planar surfaces extending at different angles, or the like. The heat extraction member can be chamfered, or otherwise contain extensions, slots, holes, grooves and the like, and may incorporate depressions such as collimating cup or other form to enhance optical performance. The illustrated heat extraction member includes elliptical cups **2602**. The heat extraction member may be composed of copper, copper alloys such as beryllium, aluminum, aluminum alloys, steel, or other metal, or alternatively of another high thermal conductivity material such as ceramic. Preferably, the heat extraction member is constructed from an electrically and thermally conductive metal. Such materials are commercially available from a wide variety of sources.

The cups **2602** are formed in the top surface of the heat extraction member for receipt of the semiconductor optical radiation emitters. The illustrated cups **2602** are elliptical to accommodate two emitter chips **2603**, **2605** side-by-side. However, the cups may be of any suitable shape such as round, elliptical, rectangular, square, pentagonal, octagonal, hexagonal, or the like. The elliptical cups have the advantage of accommodating more than one emitter while providing an efficient reflector for projecting light outwardly in a desired radiation pattern. It is envisioned that the region of the heat extraction member directly underlying the point of attachment of the semiconductor optical radiation emitter may be coated with nickel, palladium, gold, silver or other material including alloys, in order to enhance the quality and reliability of the die attach. Other thin-layered materials may be optionally inserted between the emitter and the heat extraction member to achieve a variety of desired effects without departing from the scope and spirit of the present invention. The material preferably provides an electrical connection between the emitters and the heat extraction member whereby the heat extraction member can provide a reference potential, which may for example be ground potential. The materials are preferably adhesive, electrically insulative, and either conductive or patterned composite of electrically insulative and conductive materials, and without significantly impeding thermal transfer, may be used to support, bond, electrically connect or otherwise mount to the emitter to the heat extraction member. The region of the heat extraction member within optical-enhancement cup feature may be coated with silver, aluminum, gold or other suitable material to increase reflectance and improve the optical efficiency of the device. The area outside of the encapsulant may be coated with nichrome, black oxide or other high emissivity treatment to improve radiative cooling.

The connection of the semiconductor optical radiation emitter is preferably by the use of a special type of electrically conductive adhesive die-attach epoxy. These adhesives normally achieve good electrical conductivity by inclusion metallic fillers such as silver in the adhesive. Suitable die-attach adhesives are well known in the art and may be obtained from Quantum Materials of San Diego, Calif., from Ablestik division of National Starch and Chemical, and EpoTek of Billerica, Mass. Alternatively, solder may be used as a means of attaching the LED chip to the heat extraction member in some embodiments. Whether attached by electrically conductive adhesive or solder, the bond establishes good electrical and thermal conductivity between the emitter and the heat extraction member. In the case where the emitters having electrodes manifest as conductive bond pads at the top of the LED chips rather than at their base, the electrical attachment of all of the electrodes is by wire bond rather than by die attach to the heat extraction member.

The semiconductor optical radiation emitters comprise any component or material that emits electromagnetic radiation having a wavelength between 100 nm and 2000 nm by the physical mechanism of electroluminescence, upon passage of electrical current through the material or component. For purposes of generating head light illumination, different emitters can be used in the wells to generate the light, such as: all amber emitters the wells; or amber and cyan emitters positioned in each of the wells; or red-orange and cyan emitters placed in each of the wells; or cyan and amber emitters placed in some of the wells and red-orange and cyan emitters in other wells; phosphorous emitters in each of the wells; or the like. It is envisioned that four out of the five wells can have blue-green and amber emitters and one in five wells can have red-orange and amber emitters. Such an arrangement will produce a white light for illuminating the path of the vehicle.

The semiconductor optical emitter may comprise a light emitting diode (LED) chip or die as are well known in the art, light emitting polymers (LEPs), polymer light emitting diodes (PLEDs), organic light emitting diodes (OLEDs) or the like. Such materials and optoelectronic structures made from them are electrically similar to traditional inorganic materials known to those skilled in the art, and are available form a variety of different sources. Semiconductor optical radiation emitter, or emitter, as used herein refers to each of these and their equivalents. Examples of emitters suitable for headlamps include AlGaAs, AlInGaP, GaAs, GaP, InGaN, SiC, and may include emissions enhanced via the physical mechanism of fluorescence by the use of organic or inorganic dies or phosphors. LED chips suitable for use in the present invention are made by companies such as Hewlett-Packard, Nichia Chemical, Siemans Optoelectronics, Sharp, Stanley, Toshibe, Lite-On, Cree Research, Toyoda Gosei, Showa Denko, Tyntec, and others. Such chips are typically fashioned approximately in square base between 0.008" and 0.016" long on each side, a height of about 0.008" to 0.020". To implement the headlight, a larger chip having a square base larger than 0.020" may be used, and in particular it is advantageous to have a size greater that 0.025" to 0.035" to generate light. An array of such emitters mounted to a substantial heat sink permits an LED lamp to generate sufficient light to operate as a vehicle headlight. Details of an emitter that can be used can be found in U.S. patent application Ser. No. 09/426,795, filed on Oct. 22, 1999, entitled SEMICONDUCTOR RADIATION EMITTER PACKAGE, by John K. Roberts et al., the disclosure of which is incorporated herein by reference. An electrical path for supplying control signals to the emitters is provided through conductors. The conductors are electrical strips applied to a surface of an insulative layer. The insulative layer being mounted to the top surface of the heat sink. The insulative layer may be a circuit board including openings over the cups, or it may comprise an epoxy or plastic layer. The conductor may be any suitable electrically conductive material such as copper, aluminum, an alloy, or the like, and may advantageously comprise circuit traces applied to the insulating material by conventional means. The circuit traces disclosed in FIG. **26***a* illustrate a pattern that may be used where separate supply is provided for the different emitters.

An encapsulant is a material or combination of materials that serves primarily to cover and protect the semiconductor optical radiation emitter and wire bonds. The encapsulant is

transparent to wavelengths of radiation. For purposes of the present invention, a substantially transparent encapsulant refers to a material that, in a flat thickness of 0.5 mm, exhibits greater than 20% total transmittance of light at any wavelength in the visible light range between 380 nm and 800 nm. The encapsulant material typically includes a clear epoxy or other thermoset material, silicone or acrylate. Alternatively, the encapsulant may conceivably include glass or thermoplastic such as acrylic, polycarbonate, COC or the like. The encapsulant may include materials that are solid, liquid or gel at room temperature. The encapsulant may include transfer molding compounds such as NT 300H, available form Nitto Denko, or potting, encapsulation or other materials which start as a single part or multiple parts and are processed with a high temperature cure, two part cure, ultra-violet cure, microwave cure, or the like. Suitable clear encapsulants may be obtained from Epoxy Technology of Billerica, Mass., from Nitto Denko America, Inc., of Fremont, Calif., or from Dexter Electronic Materials of Industry, Calif.

The encapsulant may provide partial optical collimation or other beam formation of electromagnetic energy emitted by the emitter and or reflected by the surface of heat extraction member. The encapsulant also serves as a chemical barrier, sealant, and physical shroud providing protection of emitters, internal adhesives such as bonds, bond pads, conductor wires, wire bonds and internal surfaces of heat extraction member and electrical leads from environmental damage due to oxygen exposure, exposure to humidity or other corrosive vapors, solvent exposure, mechanical abrasion or trauma, and the like. Encapsulant provides electrical insulation. Encapsulant may also provide for attaching or registering to adjacent components such as secondary optics, support members, secondary heat extractors, and the like.

The encapsulant may comprise a heterogeneous mass of more than one material, wherein each material occupies a portion of the overall encapsulant volume and provides a specialized function or property. For example, a stress relieving gel such as a silicone "glob top" may be placed over the emitter and wire bonds. Such a localized stress relieving gel remains soft and deformable and may serve to cushion the emitter and wire bonds from stress incurred during subsequent processing of the component or due to thermal expansion to shock. A hard molding compound such as an epoxy, may then be formed over the stress relieving gel to provide structural integration for the various features of the component, to retain the electrical leads, to protect the internal mechanisms of the component from environmental influences, to electrically insulate the semiconductor radiation emitters, to provide various optical moderation of radiant energy emitted by the emitter if desired.

Additionally, the filler used within the stress relieving gel may advantageously include a high thermal conductivity material such as diamond powder. Diamond is a chemically inert substance with an extremely high thermal conductivity. The presence of such a material may significantly increase the thermal conductivity of the gel and provide an additional path for heat generated in the emitter chip to reach the heat extraction member and ambient environment where it can be dissipated. Such additional heat extraction path will increase the efficiency of the emitter, and thus the light output of the lamp. The encapsulant, and manufacture of a device using such an encapsulant is described in greater detail in U.S. patent application Ser. No. 09/426,795, incorporated by reference hereinabove.

A steerable light emitting diode headlamp **2700** is illustrated in FIG. **27**. The headlamp includes a heat extraction member **2701** having two lamp sections **2703** and **2705**. The heat extraction member **2701** is configured to include the two lamp sections **2703** and **2705** each of which is substantially identical to lamp **2601**, presenting two front faces at an angle of 50 to 45°, and may advantageously be angled at approximately 15°.

Another alternative design for a headlamp for providing low and high beams is illustrated in FIG. **28**. The headlamp **2800** includes a heat extraction member **2801** having two lamp sections **2803** and **2805**. The heat extraction member **2801** is configured to include the two lamp sections **2803** and **2805**, each of which is substantially identical to lamp **2601**. The heat extraction member provides two front faces at an angle of 1° to 2°, and may advantageously be angled at approximately 1.5°. The angle is exaggerated in FIG. **28** so that the angled surfaces are readily visible.

By controlling the selection of the LEDs that are illuminated, the headlights can be aimed. It is also envisioned that the front of the car can have LED chips positioned in a bar running across the front grill.

Whereas the above embodiment takes advantage of directly mounting a number of chips on a common heat sink, it is also envisioned that an array of discrete LED lamps can be used to implement an LED headlamp **2650** (FIGS. **26***c* and **26***d*). Each discrete LED lamp preferably includes a heat extraction member for dissipating power generated by the emitters to obtain a brighter light level without damaging the LED components. A particularly advantageous high power LED lamp which is uniquely adapted for conventional manufacturing processes is disclosed in U.S. patent application Ser. No. 09/426,795, entitled SEMICONDUCTOR RADIATION EMITTER PACKAGE, filed on Oct. 22, 1999, by John K. Roberts et al., the disclosure of which is incorporated herein by reference. Other LED lamps that could be used are commercially available from LED manufacturers such as Hewlett Packard Company.

The LED lamps **2650** (only some of which are numbered) are mounted to a circuit board **2652** and heat sink **2654** (FIG. **26***d*). The circuit board can provide a secondary heat sink, where the conductive layer **2660** of the circuit board exposed to ambient air, by thermally coupling the heat extraction member **2664** of each LED lamp to the conductive layer **2662** of the circuit board. The heat extraction member of the LED lamp is also thermally coupled to the heat sink **2654**. In the illustrated embodiment of FIGS. **26***c* and **26***d*, the thermally conductive material **2670** is positioned in a hole through the circuit board below the heat extraction member. The thermally conductive material is thicker than the circuit board, and resilient. For example, the thermally conductive material can be provided using a preformed thermal coupler such as a silicon based, cut resistant material commercially available from Bergquist, and identified as Silipad 600. Packages for LED lamps using the heat extraction member are disclosed in U.S. patent application Ser. No. 09/425,792, entitled INDICATORS AND ILLUMINATORS USING A SEMICONDUCTOR RADIATION EMITTER, filed on Oct. 22, 1999, by John K. Roberts et al., the disclosure of which is incorporated herein by reference thereto.

Where red-green-blue or binary complementary lighting is used, it is envisioned that only selected chips will be flashed OFF when attempting to distinguish reflective objects from lamps. Thus, for binary complementary emitters, only amber emitters need to have a briefly reduced intensity. Additionally, it will be recognized that instead of turning the headlamps OFF, the light level can be reduced to

a level at which reflections will be below the pixel threshold at which the image sensor assembly will detect an object.

Other LED device/component structures that may be employed are disclosed in commonly assigned U.S. Provisional Application No. 60/265487 entitled HIGH POWER RADIATION EMITTER DEVICE AND HEAT DISSIPATING PACKAGE FOR ELECTRONIC COMPONENTS, filed on Feb. 1, 2001, by John K. Roberts et al. and in commonly assigned U.S. Provisional Application No. 60/265489 entitled RADIATION EMITTER DEVICES AND METHOD OF MAKING THE SAME, filed on Jan. 22, 2001, by John K. Roberts et al.

Surface Mounted Filter for Sensor

A method by which a filter can be directly deposited onto a semiconductor light sensor **201** will now be described with respect to FIGS. **29***a* through **29***d*. In the first step, a photoresist **2877** is deposited over the entire wafer **2972**. The photoresist may be any suitable commercially available photoresist material. Portions of the photoresist may be removed such that the remaining photoresist **2877** is patterned to cover only those areas on the surface of the wafer requiring protection from the optical coating deposition, such as the bonding pad **2975**, as shown in FIG. **29***b*. The optical film coating **2979** is then applied to the surface of the die **2972** as shown in FIG. **29***c*.

The thin film **2979** is deposited directly on the light sensor **2932** in multiple layers. The red and cyan filters, if red and cyan filters are desired, will be applied separately. An example of a cyan filter will be now be described. To make a cyan filter, the layers of titanium dioxide (TiO_2) and silicon dioxide (SiO_2) described in Table 1 can be used. To make a red filter, the layers described in Table 2 can be used. The layer number is the order in which the material is applied to the wafer surface.

TABLE 1

Layer	Material	Thickness (nm)
1	SiO_2	170
2	TiO_2	124
3	SiO_2	10
4	TiO_2	134
5	SiO_2	160
6	TiO_2	79
7	SiO_2	164
8	TiO_2	29
9	SiO_2	168
10	TiO_2	68
11	SiO_2	164
12	TiO_2	33
13	SiO_2	163
14	TiO_2	69
15	SiO_2	154
16	TiO_2	188
17	SiO_2	148
18	TiO_2	88
19	SiO_2	319

TABLE 2

Layer	Material	Thickness (nm)
1	TiO_2	68
2	SiO_2	64
3	TiO_2	35
4	SiO_2	138
5	TiO_2	57

TABLE 2-continued

Layer	Material	Thickness (nm)
6	SiO_2	86
7	TiO_2	50
8	SiO_2	78
9	TiO_2	73
10	SiO_2	94
11	TiO_2	54
12	SiO_2	89
13	TiO_2	52
14	SiO_2	87
15	TiO_2	50
16	SiO_2	74
17	TiO_2	28
18	SiO_2	61
19	TiO_2	49
20	SiO_2	83
21	TiO_2	48
22	SiO_2	78
23	TiO_2	48
24	SiO_2	91

After all of the layers are deposited, the photoresist is lifted off using a conventional lift process, leaving the film deposited over the light sensitive region, but not over the bonding pads, as shown in FIG. **29***d*. The resulting die can be encapsulated to provide the image array sensor in conventional packaging.

The characteristics of the filters produced according to Table 1 and Table 2 are illustrated in FIGS. **30** and **31**. In particular, the red filter will attenuate light below 625 nm whereas the blue filter will pass light between approximately 400 nm and 625 nm. Both filters will pass light above 800 nm. An infrared filter can be utilized to reduce the effect of infrared light on the performance of the headlight dimmer.

Those skilled in the art will recognize that the filters described herein are exemplary, and other filters, materials, or material thickness could be used to implement the filter function. Other materials could be applied in a similar manner to provide these or other filter characteristics.

Those skilled in the art will also recognize that the layer thicknesses are rounded to the nearest nanometer. Although there will be some tolerance permitted, good precision in the stack construction is required. It will also be recognized that the layer thicknesses are exemplary. By surface mounting the filters, the cost of providing the image sensor can be greatly reduced, as components and manufacturing complexity are reduced. Additionally, an infrared filter can be applied as a coating between the pixels and the red and blue filters.

Package

An alternate optical sensor assembly **3200** is disclosed in FIG. **32**. Optical sensor assembly **3200** includes a base substrate **3202**, which is transparent. The substrate may be manufactured of any suitable material such as a transparent polymer, glass, or the like. Alternately, it is envisioned that the base substrate may be manufactured of a commercially available infrared interference filter such as those described hereinabove. Alternatively, a thin film filter may be attached to a transparent glass element to make the base substrate **3202**.

The lower surface of the base substrate has conductive strips **3210** for connection to the image array sensor **3212**. The base substrate is preferably an electrical insulator, whereby the strips can be any suitable electrically conductive material applied directly to the lower surface of the base

substrate by conventional manufacturing processes. Alternatively, if the base substrate is an electrical conductor, the strips can be applied to an electrical insulator, which is in turn applied to the base substrate.

The image array sensor **3212** is flip chip bonded to the lower surface of the base substrate **3202** by soldering pads **3211**. A dielectric material **3214**, such as an epoxy, encloses the image array sensor. The dielectric material preferably bonds with the conductive strips **3210** and the transparent element **3202**. Clips **3204** and **3206** clip onto the edges of the base substrate and make electrical contact with respective conductive strips **3210**. A respective clip can be provided for each of the conductive strips **3210**. Leads **3213**, **3215** extend from the clips for insertion into support substrate **3201**, which can be a printed circuit board, a housing, or the like. The support substrate is preferably a printed circuit board carried in a housing, such as a rearview mirror mount housing. The stops **3205**, **3207** limit the length of the leads that can be inserted into the support substrate. Alternatively, the clips can be configured for surface mounting. Examples of surface mountable clips include NAS Interplex Edge Clips, from NAS Interplex, an Interplex Industries Company located in Flushing, N.Y., USA.

Packages for mounting the image array sensor are described in U.S. Pat. No. 6,130,448, OPTICAL SENSOR PACKAGE AND METHOD OF MAKING THE SAME, filed on Aug. 21, 1998, by Fred Bauer et al., the disclosure of which is incorporated herein by reference.

The assembly of the lens to the base substrate can be provided in the same manner as described hereinabove. In particular, the lens structure is carried on the base substrate **3202**. The lens structure can be identical to the lens structure **202**, and thus can be half clear and half red, or half cyan and half red, or entirely clear where a color filter is applied directly to the surface of the image sensor as described above with respect to FIGS. **29***a*–**29***d*. To make the lens assembly, a transparent member and a UV curable adhesive can be used. The transparent member can be an epoxy member like members **230**, **802**. The UV curable adhesive can be identical to adhesive **232**.

Radar

A wave transceiver **101** (FIG. **1**) can be used to acquire additional intelligence usable for controlling the operation of the controlled vehicle **100**. The wave transceiver can be used without the image array sensor **102**, or it can be used with the image array sensor. The wave transceiver device **101** is mounted on a vehicle **100** and oriented in a generally forward direction. The wave transceiver device **101** is positioned to receive the reflections of waves emitted by the transceiver device after they have reflected off objects in front of the vehicle **100**. The wave-emitting device may be a radar system operating, for example, in a frequency range exceeding 1 GHz (77 GHz is designated for vehicular radar in many European countries) or an optical radar utilizing, for example, laser diodes for the wave-emitting device. Alternatively, the wave-emitting device **101** may be an ultrasonic transducer emitting ultrasonic waves. The wave-emitting device may be scanned across the forward field to cover various angles. For the purposes of this invention, the term "radar" will be used to encompass all of these concepts. The wave transceiver should not be interpreted as being limited to any specific type or configuration of wave transmitting or wave receiving device. The transmitter and receiver may each be mounted within a different respective housing or they both may be mounted in a common housing.

A radar processing system **3300** (FIG. **33**) controls the wave transmitting section **3301**, **3302** and interprets the signal received by the wave receiving section **3304**, **3305** to determine the presence of objects as well as the speed and direction of such objects. A headlamp controller **3303** receives target information from the radar processing system, and may optionally also receive signals from the vehicle speed sensor (such as a speedometer) and a vehicle direction sensor (such as a compass) and generates a control signal which determines the state of the vehicle headlamps **111**. The communication between the radar processing system, the vehicle speed sensor, the vehicle direction system and the vehicle headlamps may be by one of many mechanisms including direct wiring through a wiring harness or by a vehicle communication bus such as the CAN bus. Additionally, systems such as the radar processing system and the headlamp controller may be implemented by a single integrated processor, multiple processors, digital signal processors, microcontrollers, microprocessors, programmable logic units, or combinations thereof.

More particularly, the system contains a radar system that includes a wave transmitting section and a wave receiving section. The wave transceiver **101** includes an emitter **3301** and a receiver **3304**. The transmitter may be implemented using an antenna for a conventional radar, a light source for optical radar, an ultrasonic emitter, an antenna system for a Doppler radar system, or the like. The receiver **3304** may be implemented using an antenna in a conventional radar system, a light receiving element in an optical radar system, an ultrasonic receiver, a wave guide antenna in a Doppler radar system, or the like. A driver **3302** is connected to the emitter **3301** to condition signals from controller **3303** so that emitter **3301** produces signals, which, when reflected, can be detected by the receiver **3304**. The driver **3302** may be implemented using a pulse modulator, a pulse shaper, or the like. The receiver **3304** is connected to a conditioning circuit **3305** which conditions the signals detected by the receiver for further processing by controller **3303**. The conditioning cirucit may include a demodulator, a filter, an amplifier, an analog-to-digital converter (ADC), combinations thereof, and the like. The controller **3303** may be implemented using a microprocessor, a digital signal processor, a microcontroller, a programmable logic unit, combinations thereof, or the like.

The operation of radars to determine the presence of objects relative to a vehicle are well known, and will not be described in greater detail hereinbelow. For example, the time between the transmitted wave and the detection of the reflected wave may be used to determine the distance of an object. The movement of an object over successive transmission/reception cycles may be used to determine an object's relative speed and direction. Doppler radar may also be used to determine the objects speed. The magnitude of the reflected wave may be used to determine the size or density of the detected object. Operation of radars is well known, and will not be described in greater detail herein.

In order to properly control the high beam state of the controlled vehicle **100** it is necessary to determine if an object detected by the radar is a vehicle or a stationary object and, if a vehicle, whether the vehicle is an oncoming vehicle **105** or preceding vehicle **110**. This can be accomplished by comparing the speed and direction of the object with the speed and direction of the controlled vehicle **100**. The speed and direction of travel of the object is obtained using the radar principles described above. The speed of the controlled vehicle **100** may be obtained from a speed sensor on the vehicle, a global positioning system (GPS) system, or the

like. The direction of the control vehicle **100** may be obtained from a compass sensor, a steering wheel turn indicator, a GPS, or the like.

Once this information is obtained, a simple set of criteria is applied to determine if the object is a vehicle or a stationary object. If an object is stationary, it will be moving in a direction opposite the controlled vehicle **100** at the same speed as the controlled vehicle. If an object is an oncoming vehicle **105**, it will be traveling in a direction approximately opposite the controlled vehicle **100** at a speed substantially faster than that of the controlled vehicle. Finally, if an object is not moving relative to the controlled vehicle or the object is moving at a rate substantially slower than the controlled vehicle, the object is likely a preceding vehicle **1110**. The distance at which the high beams are dimmed may be a function of the speed of the controlled vehicle and may be a function of the angle between an axis straight forward of the controlled vehicle **100** and the oncoming vehicle **105** or preceding vehicle **110**.

In a more advanced system the headlamp control system not only controls the high/low beam state of the headlamps **3311**, **3312** and high beam lamps **3314**, **3315** based on the presence of one or more vehicles, but may vary the brightness of the high beam headlamps and low beam headlamps to provide a continuous transition between the two beams as a function of the distance to the nearest other vehicle, thus maximizing the available luminance provided to the driver of the controlled vehicle without distraction to the other driver. A continuously variable headlamp system is disclosed in U.S. Pat. No. 6,049,171 entitled CONTINUOUSLY VARIABLE HEADLAMP CONTROL, filed on Sep. 18, 1998, by Joseph S. Stam et al., the disclosure of which is incorporated herein by reference. The system may also vary the aim of the controlled vehicle headlamps in the vertical direction. The system may be configured to transition between more than two beams or may be configured to perform a combination of aiming and varying the brightness or one or more lamps. The headlamp processing system may also use the vehicle direction input to determine the proper horizontal aim of the headlamps to provide better illumination when traveling on curves. An LED headlamp that facilitates aiming is described above.

A light sensor **3320** can be used to detect ambient light levels and may optionally provide other light conditions. The light sensor may be implemented using a non-imaging sensor such as a silicon photodiode, a particularly advantageous photodiode disclosed in U.S. patent application Ser. No. 09/237,107, entitled PHOTODIODE LIGHT SENSOR, filed by Robert Nixon et al., the disclosure of which is incorporated herein by reference, although other non-imaging photocells could be used such as cadmium sulphide (CdS) cells, or the like. The light sensor **3320** can be alternately be implemented using an optical image sensor **102** in addition to, or instead of, a non-imaging light sensor.

The optical system may contain filters to determine the color of a light source. The combination of an optical system with a radar system may better overcome the limitations present if only one or the systems are used independently. For example, if a radar system is used independently of an imaging system, an oncoming or preceding vehicle waiting at an intersection would be perceived by the radar system as a stationary object. However, by combining an optical sensor with the radar system, the lights on the waiting vehicle would indicate that a vehicle is present and the radar can determine the actual distance to the vehicle. In general, if an optical system is used, the optical system may be used to determine the presence of oncoming or preceding vehicles and the radar system may be used to determine the actual distance to such oncoming or preceding vehicle as well as the speed of that vehicle. In this manner, the radar detector and the imaging sensor can be used to verify the presence of other objects. Additionally, the light sensors can be used to determine light conditions, such as ambient light levels.

The presence of the radar system on the vehicle may enable other features other than headlamp control to be implemented utilizing the same components as the headlamp radar, thus reducing the cost of the two systems combined. Such system may include, for example, adaptive cruise control, obstacle warning systems, collision avoidance systems, autonomous driving systems, or the like. In this case, the wave transmitting section, wave receiving section, and radar processing systems could be shared by all features while each feature has its own processing system for determining a course of action based upon the information received from the radar processing system. It is also possible to integrate the processing systems from each feature into a single processor.

A radar system is described in U.S. patent application Ser. No. 09/531,211, entitled AUTOMATIC HEADLAMP CONTROL SYSTEM, the disclosure of which is incorporated herein by reference.

Mirror Mount Accessory Housing

A preferred mounting structure for mounting the headlamp dimmer system of the present invention is shown in FIGS. **41–49**. As illustrated, this structure includes a mount **4101** having a slot **4103** for receiving a mounting puck (not shown) that is adhesively secured to the vehicle windshield. An aperture **4105** is formed in mount **4101** and opens into slot **4103** to allow a mount screw **4107** to extend through aperture **4105** and engage a surface of the mounting puck so as to securely hold mount **4101** on the puck and thus on the vehicle windshield. Mount **4101** includes a ball **4109** to which the socket of a mirror mounting stem (not shown) may be secured in conventional fashion. The mounting stem may be secured to a similar ball extending from the rearview mirror housing or the stem may include a ball for engaging a socket formed in the mirror housing body.

As described in more detail below, a mirror mount accessory housing **4111** is secured to mount **4101** and includes a housing cover **4113** consisting of a right half portion **4113***a* and a left half portion **4113***b*. As best shown in FIG. **44**, mount **4101** includes a plurality of laterally extending pegs **4115**, which are inserted in corresponding holes **4117** provided in housing cover portions **4113***a* and **4113***b*. Additionally, housing cover portions **4113***a* and **4113***b* include resilient tabs **4119**, which extend through a pair of slots **4121** on mount **4101** to securely hold housing cover **4113** on mount **4101**. Housing cover portions **4113***a* and **4113***b* further include a plurality of tabs **4123** and a plurality of slotted tongues **4125**, which snap together to thereby hold together portions **4113***a* and **4113***b*. Housing portion **4113***a* includes a forward facing aperture **4127** in which a glass filter **4129** may be mounted. As explained further below, aperture **4127** and glass filter **4129** provide a window through which the inventive camera senses images.

The inventive mirror mount accessory housing structure further includes a baffle/printed circuit board (PCB) holder **4130** (also generally referred to herein as a support structure) that is adjustably mounted to mirror mount **4101** and contained within housing cover **4113**. As shown in FIG. **44**, baffle/PCB holder **4130** includes a pair of slots **4133** for engaging laterally extending pins **4135** on mirror mount

4101. Baffle/PCB holder **4130** further includes a pair of elongated slots **4137** through which screws **4139** are inserted. Screws **4139** extend through slots **4137** and are threadably engaged in holes **4141** provided in mount **4101**. By providing slots **4137** as elongated apertures, the tilt of baffle/PCB holder **4130** may be selectively adjusted relative to mount **4101**. Such tilt adjustability is desirable given the variance of the slope of vehicle windshields from one model to another. As discussed further below, the image sensor and its associated circuit board is securely mounted to baffle/PCB holder **4130**, and thus, the image sensor tilt relative to the vehicle windshield may be adjusted by adjusting the tilt of baffle/PCB holder **4130**.

As illustrated in FIG. **44**, baffle/PCB holder **4130** includes a baffle **4143** similar to the baffle discussed above. A forward end of baffle **4143** is positioned proximate aperture **4127** and glass filter **4129** while an image sensor **4145**, which includes image chip **201**, encapsulation block **230**, UV cure epoxy **232**, lens **202**, and an aperture stop **203**, as shown in FIG. **2***a*), extends into the opposite and rearward end of baffle **4143**. Image sensor **4145** is mounted on a PCB **4147** having a connector **4149** mounted thereon. Also mounted on PCB **4147** is an image sensing die (not shown), which functions as a sky sensor in the manner discussed above. To provide light from a skyward view relative to the vehicle, a light pipe **4151** is mounted over the die on PCB **4147** within a light pipe mount **4153**, which engages a corresponding light pipe support **4155** on baffle/PCB holder **4130**. Light pipe **4151** includes a pair of laterally extending protrusions **4157** that engage corresponding apertures **4159** in a light pipe filler **4161**, which has an aperture **4163** through which the distal end of light pipe **4151** extends. Light pipe filler **4161** is mounted within an aperture **4165** formed in an upper surface of housing cover **4113**. As will be apparent to those skilled in the art, light pipe **4151** captures the skyward light in its distal end that extends through filler **4161** towards the sky, and the skyward light is then directed through light pipe **4151** to the die on PCB **4147**.

As discussed above, a processor may be mounted on PCB **4147** to preprocess some of the image data obtained from image sensor **4145**.

A compass PCB **4171** may optionally be mounted within the inventive housing structure **4111**. Compass PCB **4171** includes a pair of compass sensors **4173**, which may be magneto resistive sensors, magneto inductive sensors, flux-gate sensors, or the like. By mounting compass PCB **4171** on baffle/PCB holder **4130**, the relative tilt of sensors **4173** may be adjusted relative to the vehicle horizontal to ensure accurate sensing. Compass PCB **4171** includes a connector (not shown) to which a corresponding connector **4175** may be coupled. Connector **4175** connects compass PCB **4171** to a processor (not shown) in the mirror body via cable **4177**. Cable **4177** also connects the same or a different processor within mirror body to PCB **4147** via a coupler **4179** and coupler **4149**. A pair of resilient prongs **4181** of a clip structure **4183** is disposed behind PCB **4147** and secures to baffle/PCB holder **4130**. Baffle/PCB holder **4130** includes a lateral extension **4187**, which extends around connectors **4149** and **4179** and provides a ledge upon which resilient prongs **4181** may latch to secure the clip **4183** and PCB **4147** to baffle/PCB holder **4130** and to assist in securing the engagement of couplers **4149** and **4179**.

The above-described mounting structure provides several advantageous features. Specifically, the tilt angle of the image sensor may be selectively adjusted while not requiring movement of the housing cover relative to the mirror mount. This avoids the need to have mounting screws accessible from the exterior of the housing and thus reduces the possibility of someone tampering with the adjustment subsequent to final adjustment by the manufacturer. Further, the interior components shown in FIGS. **46–49** may be secured to mirror mount **4101** after it has been secured to the vehicle windshield and the adjustment may then be made with the housing cover subsequently snapped into place following final adjustment.

An additional advantage is provided by the use of light pipe **4151**. In the absence of light pipe **4151**, an additional circuit board would need to be mounted at an angle relative to PCB **4147** to aim the die mounted on such an inclined. PCB towards the sky above the vehicle.

Although the mirror mount accessory housing has been described for mounting an image sensor, sky sensor, and compass sensors, it will be appreciated that any one or combination of these components may be disposed in the housing. Further, other components may be disposed in the housing in addition to, or in place of, any or all of the above components.

While the present invention has generally be described as preferably utilizing the full capability of the exterior lights to produce a large number of potential beam patterns that may change discretely or through a continuum, it is possible to use the system to simply turn headlamps on and off, as disclosed, for example, in U.S. patent application Ser. No. 09/491,192, entitled VEHICLE EQUIPMENT CONTROL WITH SEMICONDUCTOR LIGHT SENSORS, filed by Jon Bechtel et al. on Jan. 25, 2000, the disclosure of which is incorporated herein by reference.

While the invention has been described in detail herein in accordance with certain embodiments thereof, many modifications and changes may be effected by those skilled in the art without departing from the spirit of the invention. Accordingly, it is intended that the appended claims not be limited by way of details and instrumentalities describing the embodiments shown herein.

The invention claimed is:

1. A control system to control exterior lights of a controlled vehicle comprising:

an imaging system configured to image the scene forward of the controlled vehicle; and

a control circuit for processing the image of the scene obtained from said imaging system and for controlling the exterior lights to change their beam pattern in response to objects detected in the processed scene, said control circuit disables automatic control of the exterior lights in response to activation of the vehicle windshield wipers.

2. The control system of claim **1**, wherein said control circuit is coupled to receive a signal from said windshield wipers when they are activated.

3. The control system of claim **1**, wherein said control circuit determines that the windshield wipers are activated upon detecting a wiper within the scene imaged by said imaging system.

4. The control system of claim **1**, wherein said control circuit determines that the windshield wipers are activated upon receiving a wiper activation signal from a rain sensor provided in the vehicle.

5. The control system of claim **1**, wherein said imaging system is disposed in a rearview mirror assembly.

6. The control system of claim **1**, wherein said control circuit changes the beam pattern of the exterior lights by turning on or off at least one of the exterior lights.

7. The control system of claim **1**, wherein said control circuit changes the beam pattern of the exterior lights by continuously varying the brightness of at least one of the exterior lights.

8. The control system of claim **1**, wherein the exterior lights include headlamps operable in at least high and low beam states, and wherein said control circuit prevents the headlamps from operation in a high beam state when the vehicle windshield wipers are activated.

9. The control system of claim **1**, wherein said control circuit is responsive to the speed of the windshield wipers to disable automatic control of the exterior lights when the windshield wipers are operating above a threshold speed.

10. The control system of claim **1**, wherein the exterior lights include foul weather lights and said control circuit activates the foul weather lights when the vehicle windshield wipers are activated.

11. The control system of claim **10**, wherein the foul weather lights include fog lights and said control circuit activates the fog lights when the vehicle windshield wipers are activated.

12. A control system to control exterior lights of a controlled vehicle comprising:

an imaging system configured to image the scene forward of the controlled vehicle; and

a control circuit for processing the image of the scene obtained from said imaging system and for controlling the exterior lights to change their beam pattern in response to objects detected in the processed scene, said control circuit disables automatic control of the exterior lights when fog is detected on the windshield.

13. The control system of claim **12**, wherein fog is detected to be on the windshield when the vehicle windshield defroster is operating at a speed above a threshold.

14. The control system of claim **12**, wherein said imaging system is disposed in a rearview mirror assembly.

15. The control system of claim **12**, wherein said control circuit is disposed in a rearview mirror assembly.

16. The control system of claim **12**, wherein the exterior lights include headlamps operable in at least high and low beam states, and wherein said control circuit prevents the headlamps from operation in a high beam state when the vehicle windshield defroster is operating at full speed.

17. The control system of claim **12**, wherein said control circuit changes the beam pattern of the exterior lights by turning on or off at least one of the exterior lights.

18. The control system of claim **12**, wherein said control circuit changes the beam pattern of the exterior lights by continuously varying the brightness of at least one of the exterior lights.

19. The control system of claim **12**, wherein the exterior lights include foul weather lights and said control circuit activates the foul weather lights when the vehicle windshield defroster is operating at full speed.

20. The control system of claim **19**, wherein the foul weather lights include fog lights and said control circuit activates the fog lights when the vehicle windshield defroster is operating at full speed.

21. A method of detecting snowfall or fog outside a vehicle comprising the steps of:

sensing light levels forward of the vehicle and light levels above the vehicle;

comparing the relative brightness of the light levels forward and above the vehicle; and

determining that it is snowing or foggy when a ratio of the relative brightness forward of the vehicle to that above the vehicle reaches a threshold.

22. The method of claim **21**, wherein the relative brightness of the light levels forward and above the vehicle are compared as the brightness of the vehicle's headlamps is increased.

23. A control system to control exterior lights of a controlled vehicle comprising:

a light sensing system configured to sense light levels forward of the controlled vehicle; and

a control circuit for receiving the light levels obtained from said sensing system and for controlling the exterior lights to change their beam pattern in response to the obtained light levels, said control circuit disables automatic control of the exterior lights when snow is detected.

24. The control system of claim **23**, wherein said sensing system senses light levels forward of the vehicle and above the vehicle.

25. The control system of claim **24**, wherein said sensing system includes a single pixel sensor for sensing the light level above the vehicle.

26. The control system of claim **25**, wherein said sensing system includes a second sensor for sensing the light level forward of the vehicle.

27. The control system of claim **26**, wherein said single pixel sensor is positioned at about a 45° angle relative to said second sensor.

28. The control system of claim **24**, wherein said sensing system includes a second sensor for sensing the light level forward of the vehicle.

29. The control system of claim **24**, wherein said control circuit compares the relative brightness of the light forward of the vehicle with that of the light above the vehicle as the brightness of the vehicle's headlamps increases, and determines that it is snowing when the ratio of relative brightness forward of the vehicle to that above the vehicle reaches a threshold.

30. The control system of claim **23**, wherein the exterior lights include headlamps operable in at least high and low beam states, said control circuit disables the headlamps from operation in a high beam state when the vehicle windshield defroster is operating at full speed.

31. The control system of claim **23**, wherein the exterior lights include headlamps operable in at least high and low beam states, said control circuit disables the headlamps from operation in a high beam state when the vehicle windshield wipers are activated.

32. The control system of claim **25**, wherein said single pixel sensor senses the ambient light outside of the vehicle, and said control circuit varies the brightness of daytime running lamps in response to the ambient light level sensed by said single pixel sensor.

33. The control system of claim **23**, wherein the exterior lights include daytime running lights, said imaging system comprising an ambient light sensor for sensing the ambient light outside of the vehicle, and said control circuit varies the brightness of daytime running lamps in response to the ambient light level sensed by said ambient light sensor.

34. The control system of claim **23**, wherein said imaging system includes an image array sensor including a plurality of pixels, and an optical system configured to image the scene forward of the controlled vehicle onto said image array sensor, said optical system including a forwardmost surface, said optical system includes a hydrophilic coating on said forwardmost surface.

35. The control system of claim **23**, wherein the exterior lights include headlamps operable in at least high and low beam states, said control circuit disables the operation of the headlamps in the high beam state when it is snowing.

36. A method of controlling vehicle headlamps comprising the steps of:

detecting whether it is snowing; and

disabling the headlamps from operation in a high beam state when it is snowing.

37. A headlamp control system for controlling the headlamps of a controlled vehicle, said headlamp control system comprising:

an imaging system configured to image the scene forward of the controlled vehicle;

a control circuit coupled to said imaging system for identifying and determining the brightness of light sources in images obtained from said imaging system and for controlling the headlamps to vary a beam pattern of the headlamps as a function of the brightness of light sources within the images; and

a user input mechanism coupled to said control circuit for allowing a user to adjust a sensitivity at which said control circuit will control the headlamps in response to light sources within the images.

38. The headlamp control system of claim **37**, wherein said imaging system is disposed in a rearview mirror assembly.

39. The headlamp control system of claim **37**, wherein said control circuit is disposed in a rearview mirror assembly.

40. The headlamp control system of claim **37**, wherein said imaging system includes a plurality of sensors that integrate the light levels sensed during a predetermined integration time period, said control circuit adjusts the integration time period of said sensors in response to user adjustment of the sensitivity.

41. The headlamp control system of claim **37**, wherein said control circuit adjusts the brightness of the headlamps when the brightness of light sources in the obtained images exceeds a threshold, said control circuit varies said threshold in response to user adjustment of the sensitivity.

42. The headlamp control system of claim **37**, wherein said control circuit continuously varies the brightness of the headlamps as a function of the brightness of light sources within the images, said control circuit changes a rate at which the brightness of the headlamps is varied in response to user adjustment of the sensitivity.

43. The headlamp control system of claim **37**, wherein said imaging system includes an array of pixel sensors, said control circuit being more sensitive to light sources detected within a predetermined area of the image obtained by said pixel sensor array, said control circuit varies the boundaries of said predetermined area in response to user adjustment of the sensitivity.

44. A headlamp control system for controlling the headlamps of a controlled vehicle, said headlamp control system comprising:

an imaging system configured to image the scene forward of the controlled vehicle and to detect an ambient light level outside the vehicle; and

a control circuit coupled to said imaging system for determining an ambient light level outside the vehicle for identifying and determining the brightness of light sources in images obtained from said imaging system, and for controlling the headlamps to vary a beam pattern of the headlamps as a function of the brightness of light sources within the images when the ambient light level is above a threshold level.

45. The headlamp control system of claim **44**, wherein said imaging system includes:

an image array sensor;

an optical system configured to image the scene forward of the controlled vehicle onto said image array sensor; and

an ambient light sensor for sensing the ambient light level outside the vehicle.

46. The headlamp control system of claim **45**, wherein said ambient light sensor is aimed generally upward towards the sky above the vehicle.

47. The headlamp control system of claim **44**, wherein said imaging system is disposed in a rearview mirror assembly.

48. The headlamp control system of claim **44**, wherein said control circuit is disposed in a rearview mirror assembly.

49. A control system to control the headlamps of a vehicle comprising:

an ambient light sensor for sensing the ambient light outside of the vehicle; and

a control circuit for varying the beam pattern of daytime running lamps in response to the ambient light level sensed by said ambient light sensor.

50. The control system of claim **49**, wherein said control circuit increases the brightness of the daytime running lights in response to increasing ambient brightness.

51. The control system of claim **49**, wherein said ambient light sensor is disposed in a rearview mirror assembly.

52. The control system of claim **49**, wherein said control circuit is disposed in a rearview mirror assembly.

53. A vehicle control system to control the brightness of continuously variable headlamps that have a brightness that varies continuously between a high beam state and a low beam state, said control system comprising:

an imaging system configured to image the scene forward of the controlled vehicle;

a control circuit for identifying and determining the brightness of light sources in images obtained from said imaging system and for controlling the perceived brightness of the headlamps as a function of the brightness of light sources within the images; and

an indicator coupled to said control circuit and positioned inside the vehicle for indicating to the driver the relative brightness of the headlamps.

54. The vehicle control system of claim **53**, wherein said indicator has a brightness that varies in proportion to the brightness of the headlamps.

55. The vehicle control system of claim **53**, wherein the brightness of said indicator doubles when the headlamps are in a high beam state as a result of manual activation of the high beams.

56. The vehicle control system of claim **53**, wherein said indicator changes color as a function of the brightness of the headlamps.

57. The vehicle control system of claim **53**, wherein said indicator includes a scale that indicates a relative brightness of the headlamps.

58. The vehicle control system of claim **57**, wherein said indicator scale is a multi-segmented display in which the number of segments that are illuminated correspond to the relative brightness of the headlamps.

59. The vehicle control system of claim **53**, wherein said imaging system is disposed in a rearview mirror assembly.

60. The vehicle control system of claim **53**, wherein said control circuit is disposed in a rearview mirror assembly.

61. The vehicle control system of claim 53 and further including a second indicator for indicating when said control circuit is automatically controlling the brightness of the vehicle headlamps as a function of the brightness of light sources within the images.

62. A control system for controlling exterior lights of a controlled vehicle, said control system comprising:

an imaging system configured to image the scene forward of the controlled vehicle;

a switching mechanism for manual input of a driver's selection of a feature affecting the control of the exterior lights; and

a control circuit coupled to said switching mechanism and said imaging system for identifying and determining the brightness of light sources in images obtained from said imaging system and for controlling the exterior lights to vary the beam pattern of the exterior lights as a function of the brightness of light sources within the images and as a function of the status of said switching mechanism.

63. The control system of claim 62 wherein the exterior lights include headlamps and said switching mechanism includes a switch that allows a driver to select manual or automatic control of the vehicle headlamps.

64. The control system of claim 62, wherein, in response to selection of automatic control using said switch, said control circuit enters an automatic control mode in which the headlamps are automatically controlled in response to the detection of light sources within the images.

65. The control system of claim 64, wherein, in response to selection of manual control using said switch, said control circuit enters a manual control mode in which the headlamps are manually controlled by the driver.

66. The control system of claim 62, wherein the exterior lights include headlamps, said switching mechanism includes a switch for manually activating high beams of the vehicle headlamps, and wherein said control circuit responds to activation of said switch by turning on the high beams.

67. The control system of claim 66, wherein said switch is a toggle switch and said control circuit maintains the high beams in an on state when said switch is toggled until such time that it is again toggled at which point said control circuit automatically controls the brightness of the high beams.

68. The control system of claim 66, wherein said switch is a flash-to-pass switch, wherein said control circuit responds to manual activation of said switch by activating high beam headlamps for so long a time as the flash-to-pass switch is held in its activation position.

69. The control system of claim 62, wherein the exterior lights include headlamps, said switching mechanism includes a toggle switch for manually activating and deactivating high beams of the vehicle headlamps, and wherein said control circuit responds to toggling of said switch by changing the on/off state of the high beams from the current status of the high beams.

70. The control system of claim 69, wherein, upon switching the on/off state of the high beams in response to toggling of said switch, said control circuit maintains the high beams in the changed state for a predetermined time period at which point said control circuit enables automatic changing of the brightness of the high beams in response to the brightness of light sources in images obtained from said imaging system.

71. The control system of claim 62, wherein the exterior lights include headlamps, said switch is a flash-to-pass switch, and wherein said control circuit responds to manual activation of said switch by turning on the high beam headlamps for so long a time as the flash-to-pass switch is held in its activation position.

72. The control system of claim 71, wherein, when said flash-to-pass switch is released from its activation position, said control circuit turns off the high beam headlamps regardless of whether the high beams were on or off before such activation and thereafter enables automatic changing of the brightness of the high beams in response to the brightness of light sources in images obtained from said imaging system.

73. The control system of claim 62, wherein said imaging system is disposed in a rearview mirror assembly.

74. The control system of claim 62, wherein said control circuit is disposed in a rearview mirror assembly.

75. A control system for controlling exterior lights of a controlled vehicle, said control system comprising:

an image sensor to detect light sources in a scene forward of the controlled vehicle; and

a control circuit coupled to said image sensor, said control circuit being operable to distinguish vehicle light sources from non-vehicle light sources, to distinguish between headlamps and tail lights based upon the color of the light, to detect movement of detected vehicles, and to generate a control signal to cause the exterior vehicle lights to provide a selected illumination pattern, whereby the control signal is derived as a function of both the movement of any detected vehicles and the color of the light emanating from such vehicles.

76. The control system of claim 75, wherein the control signal is further derived as a function of any one or combination of the following parameters detected with respect to a detected light source: an AC component; brightness; relative position; and relative size.

77. The control system of claim 75, wherein the control signal is further derived as a function of any one or combination of the following parameters: turn rate of the controlled vehicle; speed of the controlled vehicle; and ambient brightness.

* * * * *

UNITED STATES PATENT AND TRADEMARK OFFICE

CERTIFICATE OF CORRECTION

PATENT NO. : 6,587,573 B1
DATED : July 1, 2003
INVENTOR(S) : Joseph S. Stam et al.

It is certified that error appears in the above-identified patent and that said Letters Patent is hereby corrected as shown below:

Column 1,
Line 44, “12” should be -- 12° --.

Column 5,
Line 37, before “Fig. 11;” insert -- to --.

Column 6,
Line 14, “illustrates” should be -- illustrate --.
Lines 45, 48, and 54, after “is” insert -- a --.
Line 51, “43-43’” should be -- 43’-43’ --.

Column 8,
Line 22, “A-pilar” should be -- A-pillar --.

Column 9,
Line 23, “at” should be -- of --.

Column 10,
Line 46, after “pattern” insert -- that --.
Line 65, delete “the” before “twice”.

Column 12,
Line 24, after “may” insert -- advantgeously be 1.0 mm thick. --.
Line 25, “dispers” should be -- dispersion in the lens material --.
Line 40, “form” should be -- from --.

Column 14,
Line 38, before “preferably” insert -- are --.

Column 16,
Line 17, “Co,” should be -- Co. --.

Column 19,
Line 4, after “2000,” insert -- now U.S. Patent No. 6,359,274, --.
Line 20, after “et al.,” insert -- now abandoned --.
Line 28, after “et al.,” insert -- now U.S. Patent No. 6,229,434, --.
Line 54, after “shown)” insert -- and --.

Column 21,
Line 52, “axis lens” should be -- axes lenses --.

UNITED STATES PATENT AND TRADEMARK OFFICE

CERTIFICATE OF CORRECTION

PATENT NO. : 6,587,573 B1
DATED : July 1, 2003
INVENTOR(S) : Joseph S. Stam et al.

It is certified that error appears in the above-identified patent and that said Letters Patent is hereby corrected as shown below:

Column 22,
Line 55, after "09/236,969," insert -- now abandoned --.

Column 30,
Line 2, "pixel 15is" should be -- pixel 15 is --.
Line 43, before "lights" delete "a".

Column 31,
Line 64, after the second occurrence of "+1.0" and before "*", delete "." (period).

Column 33,
Line 60, "determine to" should be -- identify --.

Column 34,
Line 25, "of" should be -- in --.

Column 43,
Line 26, "an lens 202" should be -- a lens 202 --.
Line 26, "of amount of" should be -- of --.

Column 44,
Line 6, "X and Y-axis" should be -- X- and Y-axes --.
Line 32, sentence beginning with "This" should not start a new paragraph.

Column 45,
Line 24, "and" should be -- an --.

Column 48,
Line 11, after "Nixon et al." insert -- now U.S. Patent No. 6,359,274 --.
Line 59, "Additional" should be -- Additionally --.

Column 54,
Line 12, "Led" should be -- LED --.

Column 56,
Line 28, "form" should be -- from --.
Line 44, "that" should be -- than --.
Line 50, after "Roberts et al.," insert -- now U.S. Patent No. 6,335,548, --.

UNITED STATES PATENT AND TRADEMARK OFFICE

CERTIFICATE OF CORRECTION

PATENT NO. : 6,587,573 B1
DATED : July 1, 2003
INVENTOR(S) : Joseph S. Stam et al.

It is certified that error appears in the above-identified patent and that said Letters Patent is hereby corrected as shown below:

Column 57,
Line 13, "form" should be -- from --.
Lines 53-64, "U.S. patent application Ser. No. 09/426,795" should be -- U.S. Patent No. 6,535,549 --.

Column 58,
Line 5, "50 to 45°" should be -- 5° to 45° --.
Line 33, after "Roberts et al.," insert -- now U.S. Patent No. 6,335,548, --.

Column 59,
Line 32, delete "be" (1st occurrence).

Column 60,
Line 23, before "process" insert -- off --.
Line 37, before "other" insert -- that --.

Column 62,
Line 45, "radars" should be -- radar --.
Line 53, "objects" should be -- object's --.

Column 63,
Line 38, "or one" should be -- of one --.
Line 49, after "Nixon et al.," insert -- now abandoned --.
Line 52, delete "be" after "can".
Line 58, "or" should be -- of --.

Column 65,
Line 20, "2a)" should be -- 2a --.

UNITED STATES PATENT AND TRADEMARK OFFICE

CERTIFICATE OF CORRECTION

PATENT NO. : 6,587,573 B1
DATED : July 1, 2003
INVENTOR(S) : Joseph S. Stam et al.

It is certified that error appears in the above-identified patent and that said Letters Patent is hereby corrected as shown below:

Column 66,
Line 12, after "inclined" delete "." (period).
Line 21, "be" should be -- been --.

Signed and Sealed this

First Day of June, 2004

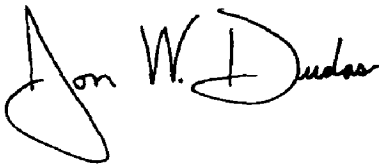

JON W. DUDAS
Acting Director of the United States Patent and Trademark Office

Exhibit PA-E

U.S. Patent No. 6,861,809

Stam

US006861809B2

(12) **United States Patent**
Stam

(10) **Patent No.: US 6,861,809 B2**
(45) **Date of Patent: Mar. 1, 2005**

(54) **HEADLAMP CONTROL TO PREVENT GLARE**

(75) Inventor: **Joseph S. Stam**, Holland, MI (US)

(73) Assignee: **Gentex Corporation**, Zeeland, MI (US)

(*) Notice: Subject to any disclaimer, the term of this patent is extended or adjusted under 35 U.S.C. 154(b) by 0 days.

(21) Appl. No.: **10/235,476**

(22) Filed: **Sep. 5, 2002**

(65) **Prior Publication Data**

US 2003/0107323 A1 Jun. 12, 2003

Related U.S. Application Data

(63) Continuation-in-part of application No. 10/197,834, filed on Jul. 18, 2002, now Pat. No. 6,593,698, which is a continuation of application No. 09/938,774, filed on Aug. 24, 2001, now Pat. No. 6,429,594, which is a continuation of application No. 09/546,858, filed on Apr. 10, 2000, now Pat. No. 6,281,632, which is a continuation of application No. 09/157,063, filed on Sep. 18, 1998, now Pat. No. 6,049,171.

(60) Provisional application No. 60/339,762, filed on Dec. 10, 2001.

(51) **Int. Cl.**[7] **H05B 37/02**; B60Q 1/02

(52) **U.S. Cl.** **315/82**; 315/149; 250/208.1

(58) **Field of Search** ..... 315/82, 77, 79, 315/83, 80, 81, 149; 250/208.1, 214, 211 R, 226, 205; 307/10.8

(56) **References Cited**

U.S. PATENT DOCUMENTS

2,131,888	A	10/1938	Harris	
2,632,040	A	3/1953	Rabinow	361/175
2,827,594	A	3/1958	Rabinow	315/83
3,179,845	A	4/1965	Kulwiec	
3,581,276	A	5/1971	Newman	
3,663,819	A	5/1972	Hicks et al.	
4,139,801	A	2/1979	Linares	315/83
4,151,526	A	4/1979	Hinachi et al.	

(List continued on next page.)

FOREIGN PATENT DOCUMENTS

DE	2946561	5/1981
FR	2641237	7/1990
FR	2726144	4/1996
GB	2 313 973 E	11/1981
JP	57-44541	3/1982
JP	60-15237	1/1985
JP	60-015237	1/1985
JP	05-139203	6/1993
JP	06-151067	5/1994
JP	6-267304	9/1994
JP	6-295601	10/1994
JP	7-47878	2/1995
JP	7-052706	2/1995
JP	7-69125	3/1995
JP	8166221	6/1996
WO	8605147	9/1986
WO	9735743	10/1997
WO	9843850	10/1998
WO	9947396	9/1999
WO	0022881	4/2000

OTHER PUBLICATIONS

Christopher M. Kormanyos, SAE Paper No. 980003, pp. 13–18.

(List continued on next page.)

Primary Examiner—Wilson Lee
Assistant Examiner—Chuc Tran
(74) *Attorney, Agent, or Firm*—Price, Heneveld, Cooper DeWitt & Litton LLP

(57) **ABSTRACT**

A system for controlling at least one exterior vehicle light of a controlled vehicle includes an array of sensors and a control unit. The array of sensors are capable of detecting light levels in front of the controlled vehicle. The control unit is in communication with the array of sensors and the at least one exterior vehicle light and determines a distance and an angle from the at least one exterior vehicle light of the controlled vehicle to a leading vehicle. The control unit is operable to control operation of the at least one exterior vehicle light as a function of the distance and angle, based on the output from the array of sensors, and prevent the at least one exterior vehicle light from providing a disruptive glare to a driver of the leading vehicle.

59 Claims, 13 Drawing Sheets

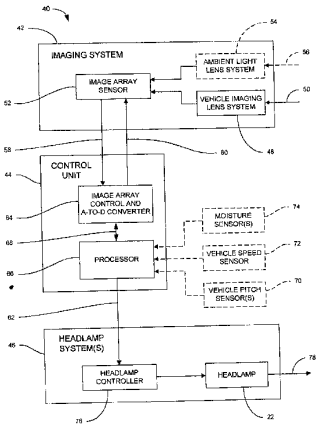

U.S. PATENT DOCUMENTS

4,236,099 A 11/1980 Rosenblum 315/83
4,258,979 A 3/1981 Mahin
4,286,308 A 8/1981 Wolff
4,357,558 A 11/1982 Massoni et al. 315/83
4,376,909 A 3/1983 Tagami et al. 315/82
4,479,173 A 10/1984 Yoshioka et al.
4,599,544 A 7/1986 Martin 315/83
4,645,975 A 2/1987 Meitzler et al.
4,665,321 A 5/1987 Chang et al. 307/10.8
4,692,798 A 9/1987 Seko et al. 348/118
4,716,298 A 12/1987 Etoh
4,727,290 A 2/1988 Smith et al. 315/82
4,768,135 A 8/1988 Kretschmer et al. 362/466
4,862,037 A 8/1989 Farber et al. 315/83
4,891,559 A * 1/1990 Matsumoto et al. 315/82
4,930,742 A 6/1990 Schofield et al. 248/475.1
4,934,273 A 6/1990 Endriz
4,967,319 A 10/1990 Seko 362/420
5,008,946 A 4/1991 Ando
5,036,437 A 7/1991 Macks 362/465
5,072,154 A 12/1991 Chen 315/82
5,086,253 A 2/1992 Lawler 315/83
5,096,287 A 3/1992 Kakinami et al.
5,124,549 A 6/1992 Michaels et al. ..... 250/237 R
5,166,681 A 11/1992 Bottesch et al.
5,182,502 A 1/1993 Slotkowski et al. 315/159
5,187,383 A 2/1993 Taccetta et al. 307/10.8
5,235,178 A 8/1993 Hegyi 250/226
5,329,206 A 7/1994 Slotkowski et al. 315/159
5,347,261 A 9/1994 Adell
5,347,459 A 9/1994 Greenspan et al.
5,355,146 A 10/1994 Chiu et al.
5,379,104 A 1/1995 Takao
5,396,054 A 3/1995 Krichever et al.
5,402,170 A 3/1995 Parulski et al.
5,416,318 A 5/1995 Hegyi 250/226
5,426,294 A * 6/1995 Kobayashi et al. 250/226
5,428,464 A 6/1995 Silverbrook
5,430,450 A 7/1995 Holmes
5,434,407 A 7/1995 Bauer et al. 250/227.24
5,451,822 A * 9/1995 Bechtel et al. 307/9.1
5,452,004 A 9/1995 Roberts
5,471,515 A 11/1995 Fossum et al. 377/60
5,475,441 A 12/1995 Parulski et al.
5,481,268 A 1/1996 Higgins
5,483,346 A 1/1996 Butzer
5,485,155 A 1/1996 Hibino
5,508,592 A 4/1996 Lapatovich et al. 315/248
5,537,003 A 7/1996 Bechtel et al. 315/82
5,541,724 A 7/1996 Hoashi
5,550,677 A 8/1996 Schofield et al. 359/604
5,554,912 A 9/1996 Thayer et al.
5,574,463 A 11/1996 Shirai et al.
5,587,929 A 12/1996 League et al.
5,592,146 A 1/1997 Kover, Jr.
5,614,788 A 3/1997 Mullins et al. 315/82
5,621,460 A 4/1997 Hatlestad et al.
5,660,454 A 8/1997 Mori et al. 362/466
5,666,028 A 9/1997 Bechtel et al. 315/82
5,684,473 A 11/1997 Hibino et al.
5,707,129 A 1/1998 Kobayashi
5,710,565 A 1/1998 Shirai et al.
5,714,751 A 2/1998 Chen
5,715,093 A 2/1998 Schierbeek et al. 359/601
5,736,816 A 4/1998 Strenke et al.
5,751,832 A 5/1998 Panter et al.
5,781,105 A 7/1998 Bitar et al.
5,786,787 A 7/1998 Eriksson et al.
5,796,094 A 8/1998 Schofield et al. 250/208.1
5,798,727 A 8/1998 Shirai et al.
5,811,888 A 9/1998 Hsieh 307/10.8
5,812,321 A 9/1998 Schierbeek et al. 359/601
5,835,613 A 11/1998 Breed et al. 382/100
5,837,994 A * 11/1998 Stam et al. 250/208.1
5,841,126 A 11/1998 Fossum et al. 250/208.1
5,845,000 A 12/1998 Breed et al.
5,867,214 A 2/1999 Anderson et al.
5,877,897 A 3/1999 Schofield et al. 359/604
5,905,457 A 5/1999 Rashid
5,912,534 A 6/1999 Benedict 315/82
5,923,027 A 7/1999 Stam et al. 250/208.1
5,942,853 A 8/1999 Piscart 315/82
5,990,469 A * 11/1999 Bechtel et al. 250/208.1
6,008,486 A 12/1999 Stam et al. 250/208.1
6,018,308 A 1/2000 Shirai
6,049,171 A * 4/2000 Stam et al. 315/82
6,097,023 A 8/2000 Schofield et al. 250/208.1
6,102,546 A 8/2000 Carter
6,130,421 A 10/2000 Bechtel et al. 250/208.1
6,140,933 A 10/2000 Bugno et al.
6,144,158 A 11/2000 Beam 315/82
6,166,698 A 12/2000 Turnbull et al. 343/713
6,184,781 B1 2/2001 Ramakesavan
6,255,639 B1 * 7/2001 Stam et al. 250/208.1
6,281,632 B1 * 8/2001 Stam et al. 315/82
6,329,925 B1 12/2001 Skiver et al. 340/425
6,349,782 B1 2/2002 Sekiya et al.
6,356,376 B1 3/2002 Tonar et al.
6,379,013 B1 * 4/2002 Bechtel et al. 359/604
6,396,040 B1 * 5/2002 Hill 250/205
6,396,397 B1 5/2002 Bos et al. 340/461
6,403,942 B1 * 6/2002 Stam ..... 250/214 AL
6,442,465 B2 8/2002 Breed et al.
6,443,602 B1 * 9/2002 Tanabe et al. 362/465
6,465,962 B1 10/2002 Fu et al.
6,469,739 B1 * 10/2002 Bechtel et al. 348/302
6,483,438 B2 11/2002 DeLine et al.
6,507,779 B2 1/2003 Breed et al.
6,617,564 B2 9/2003 Yoshioka
2002/0040962 A1 4/2002 Schoefield et al. 250/208.1

OTHER PUBLICATIONS

Franz–Josef Kalze, SAE Paper No. 980005, pp. 23–26.
J.P. Löwenau et al., SAE Paper No. 980007, pp. 33–38.
Tohru Shimizu et al., SAE Paper No. 980322, pp. 113–117.

* cited by examiner

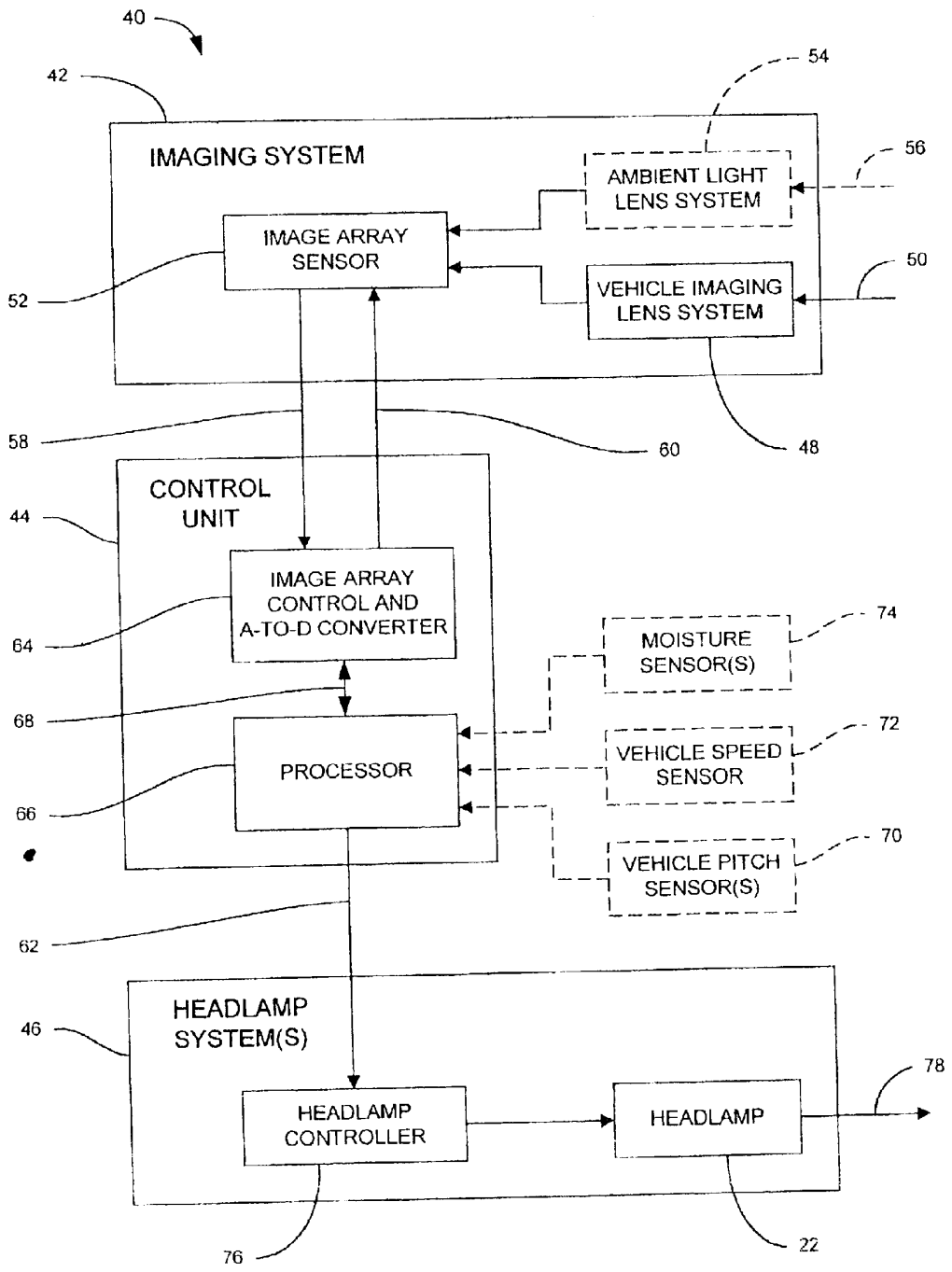
40
42
IMAGING SYSTEM
54
AMBIENT LIGHT LENS SYSTEM
56
IMAGE ARRAY SENSOR
52
VEHICLE IMAGING LENS SYSTEM
50
48
58
60
CONTROL UNIT
44
IMAGE ARRAY CONTROL AND A-TO-D CONVERTER
64
MOISTURE SENSOR(S)
74
68
PROCESSOR
66
VEHICLE SPEED SENSOR
72
VEHICLE PITCH SENSOR(S)
70
62
HEADLAMP SYSTEM(S)
46
HEADLAMP CONTROLLER
HEADLAMP
78
76
22

FIG. 1A

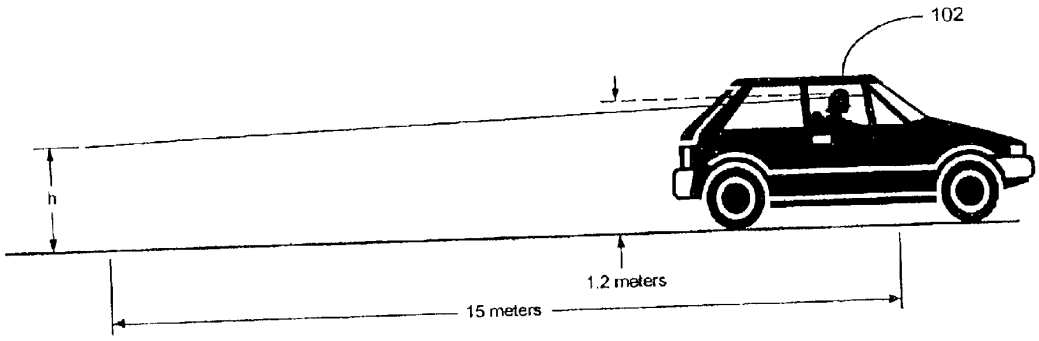
102
h
1.2 meters
15 meters

FIG. 1B

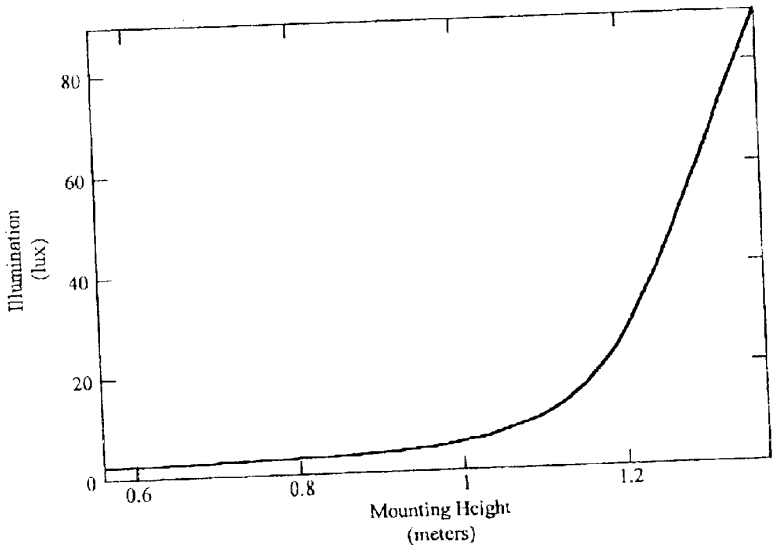
80
60
40
20
0
Illumination (lux)
0.6
0.8
1
1.2
Mounting Height (meters)

FIG. 2

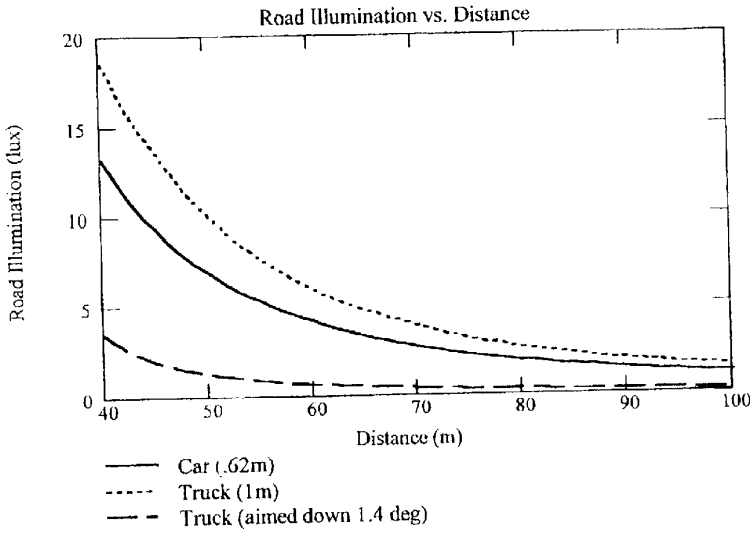
Road Illumination vs. Distance
Road Illumination (lux)
20
15
10
5
0
40
50
60
70
80
90
100
Distance (m)
Car (.62m)
Truck (1m)
Truck (aimed down 1.4 deg)

FIG. 3

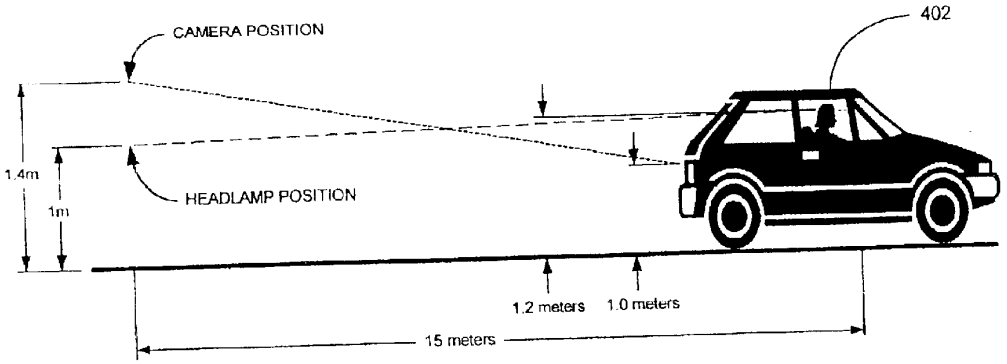
CAMERA POSITION
402
1.4m
1m
HEADLAMP POSITION
1.2 meters
1.0 meters
15 meters

FIG. 4

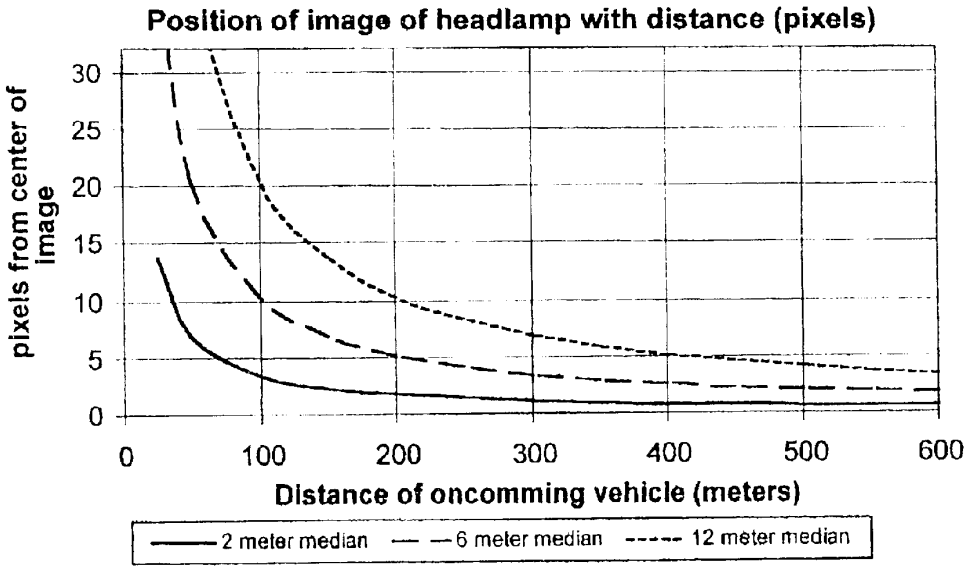
Position of image of headlamp with distance (pixels)
pixels from center of image
30
25
20
15
10
5
0
0
100
200
300
400
500
600
Distance of oncomming vehicle (meters)
2 meter median
6 meter median
12 meter median

FIG. 5

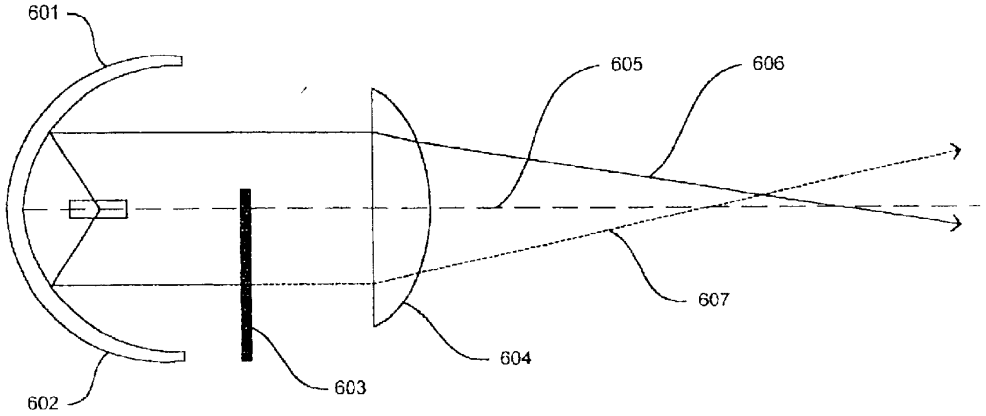

FIG. 6a

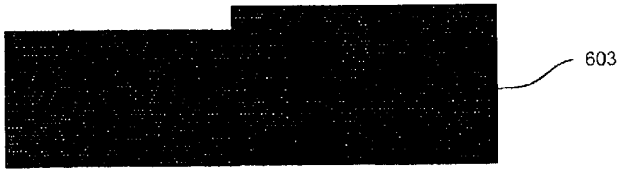

FIG. 6b

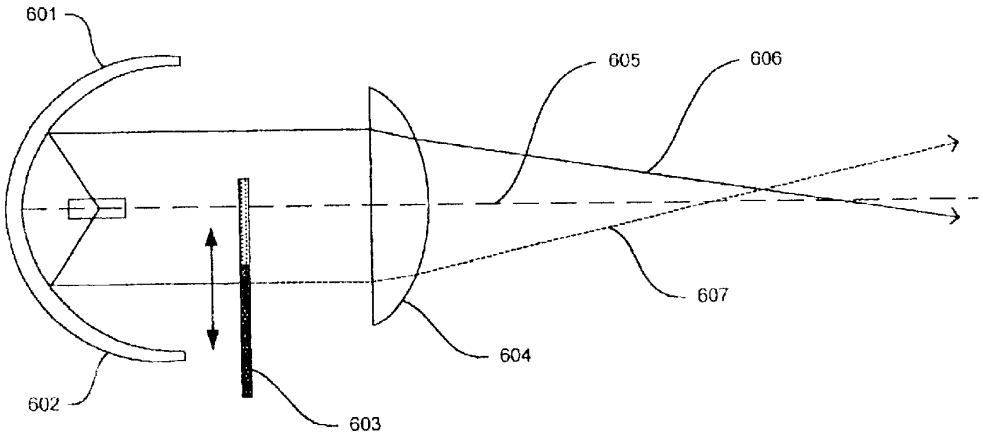

FIG. 6c

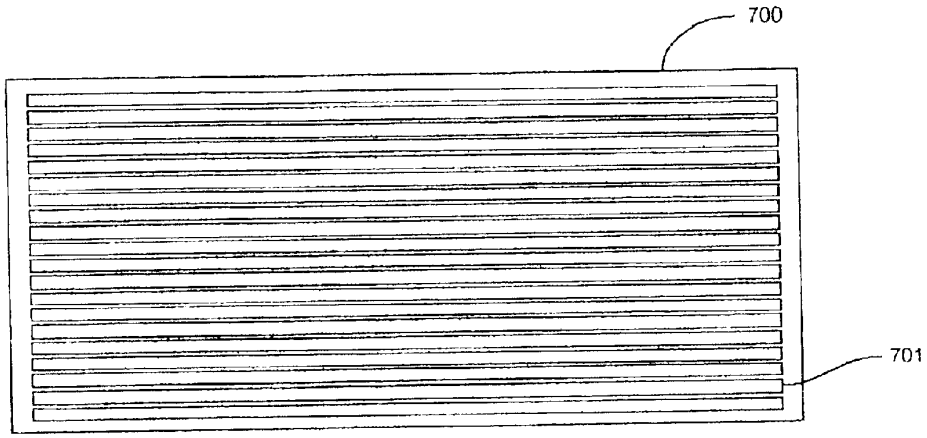

FIG. 7a

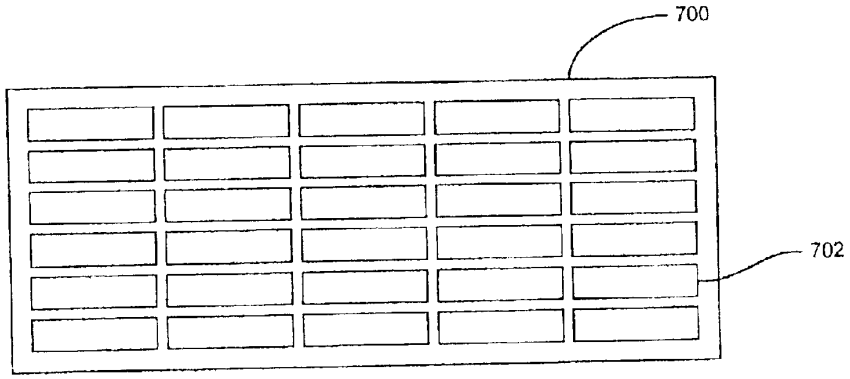

FIG. 7b

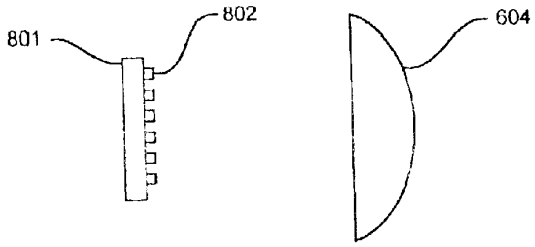

FIG. 8

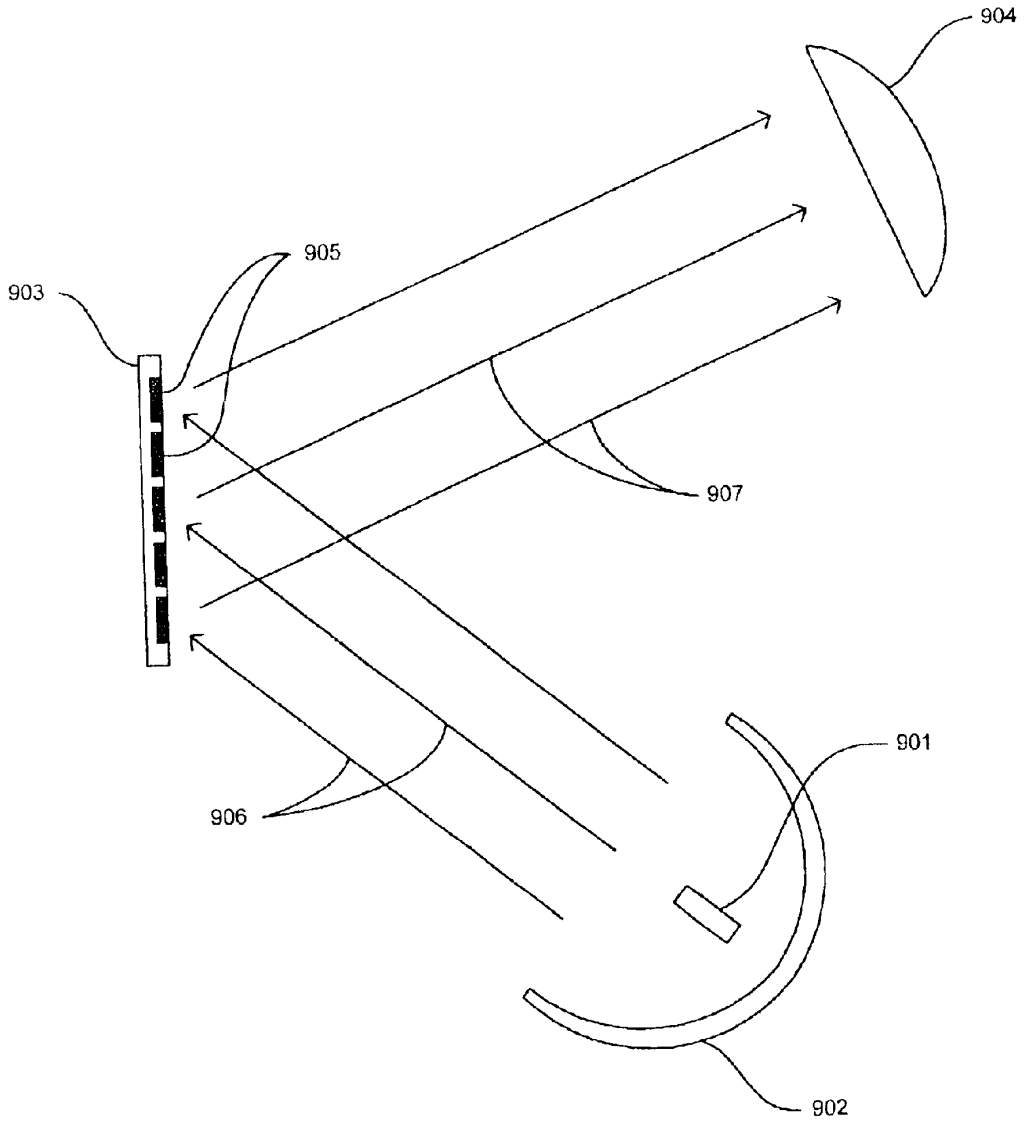

FIG. 9

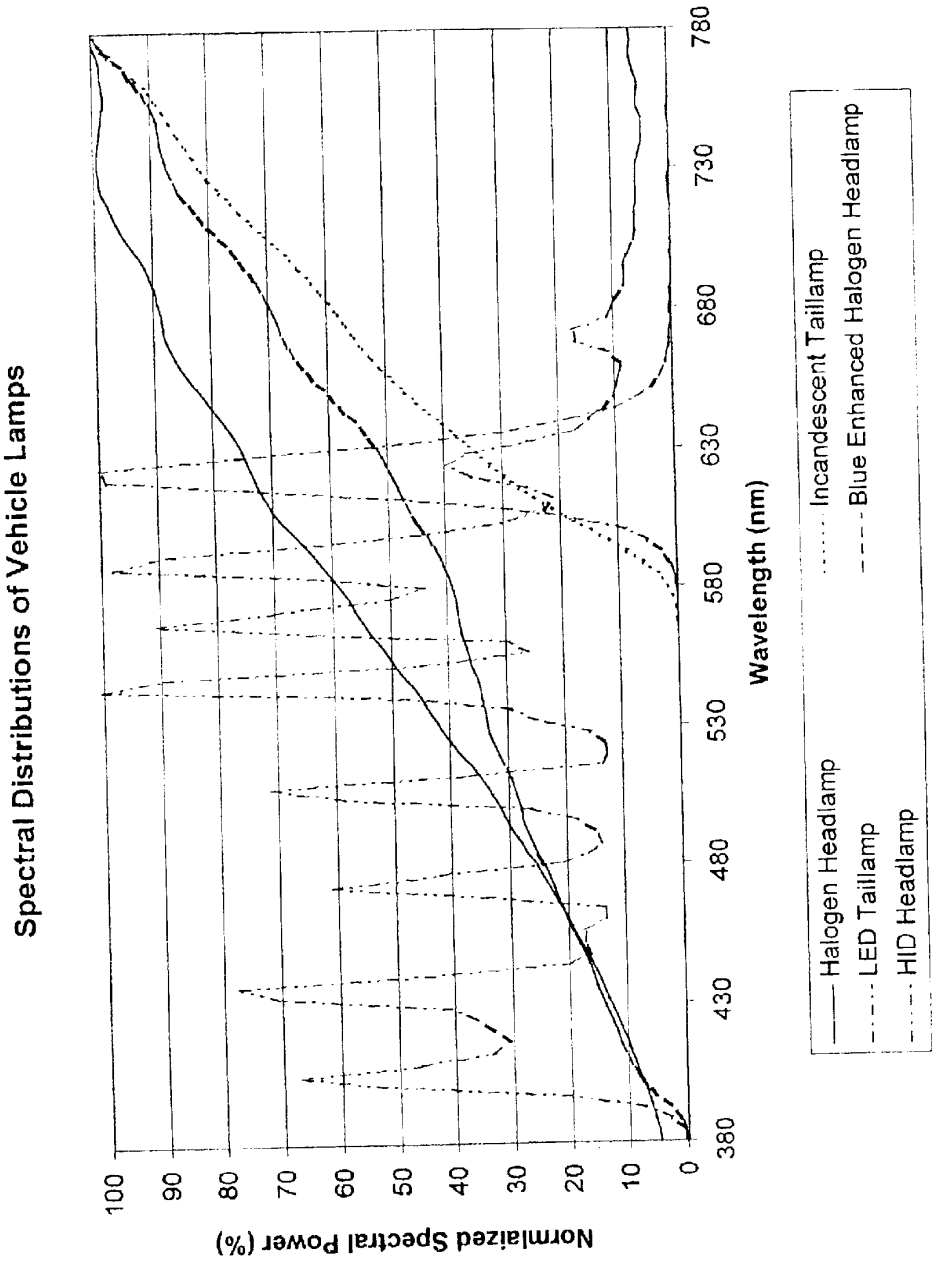
Spectral Distributions of Vehicle Lamps
Normalized Spectral Power (%)
100
90
80
70
60
50
40
30
20
10
0
380
430
480
530
580
630
680
730
780
Wavelength (nm)
Halogen Headlamp
LED Taillamp
HID Headlamp
Incandescent Taillamp
Blue Enhanced Halogen Headlamp

FIG. 10

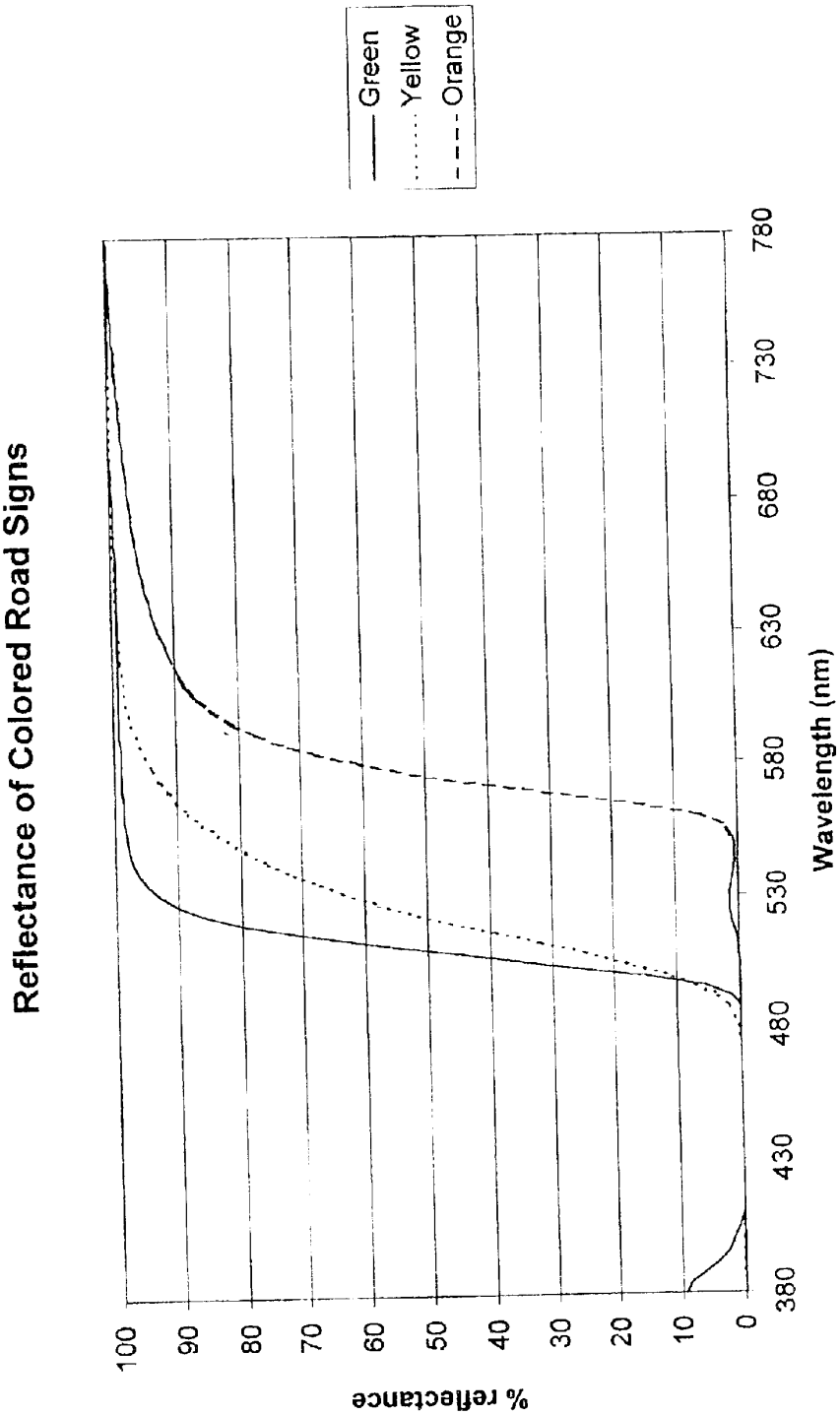
Reflectance of Colored Road Signs
Green
Yellow
Orange
% reflectance
100
90
80
70
60
50
40
30
20
10
0
380
430
480
530
580
630
680
730
780
Wavelength (nm)

FIG. 11

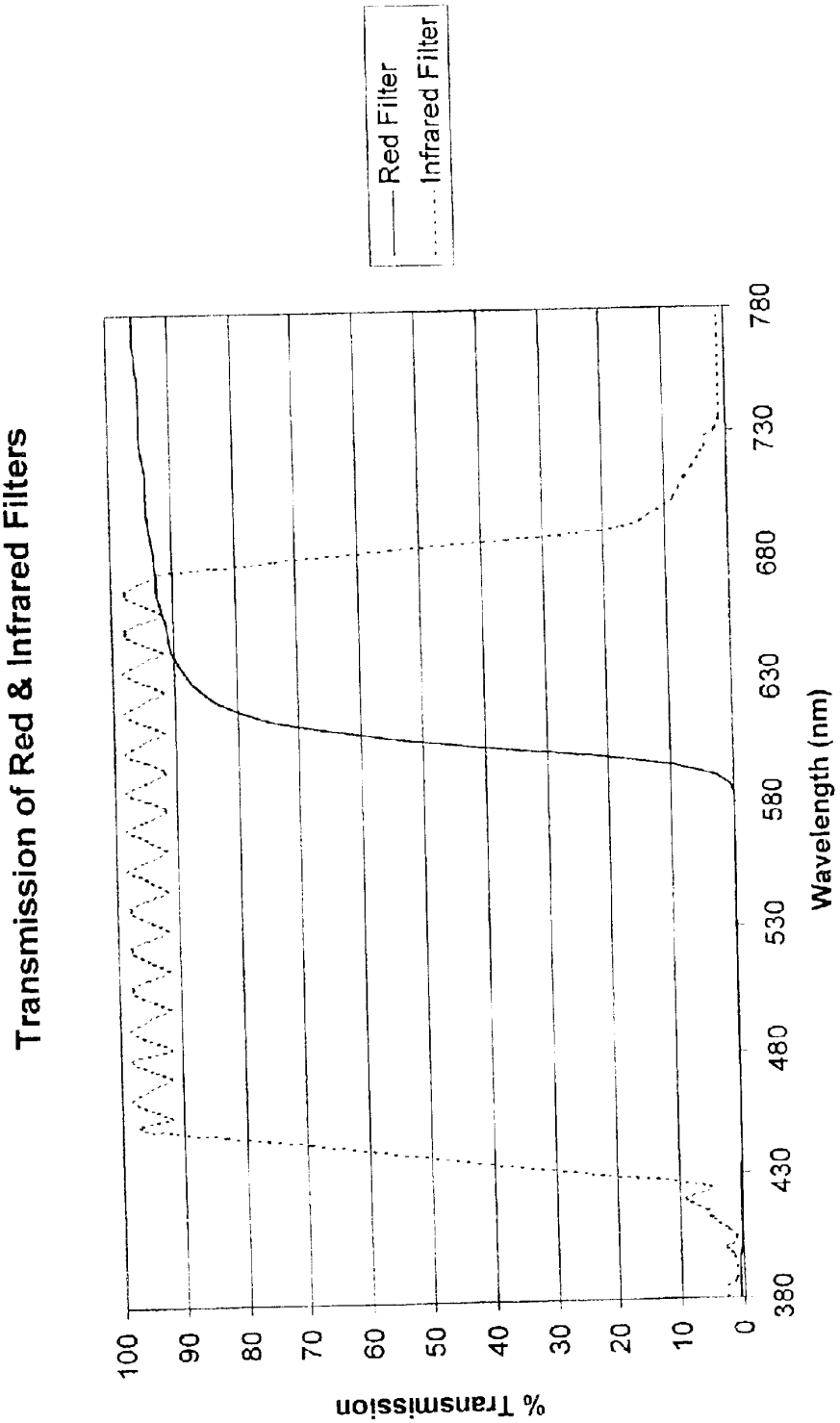
Transmission of Red & Infrared Filters
Red Filter
Infrared Filter
% Transmission
100
90
80
70
60
50
40
30
20
10
0
380
430
480
530
580
630
680
730
780
Wavelength (nm)

FIG. 12

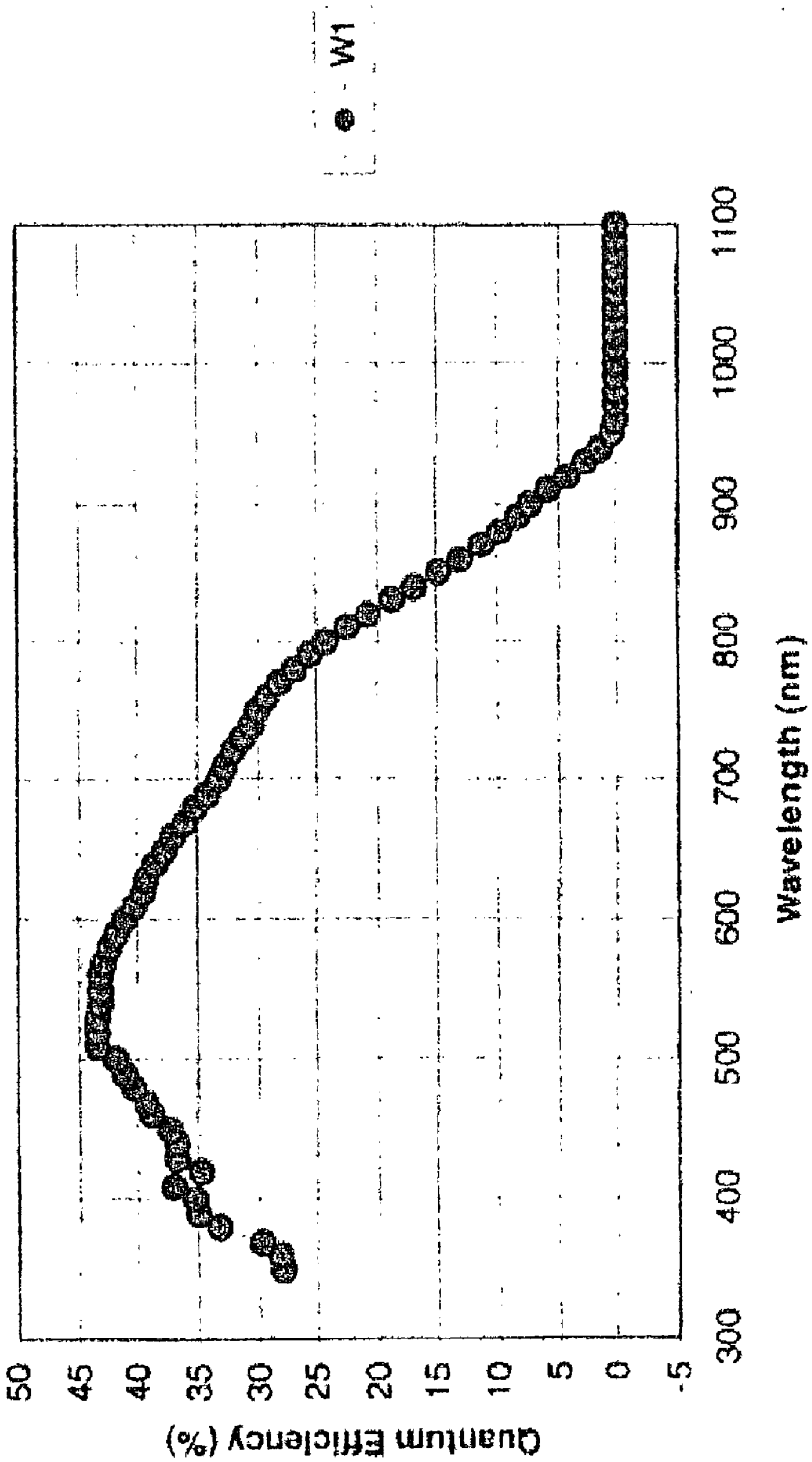
W1
Quantum Efficiency (%)
50
45
40
35
30
25
20
15
10
5
0
-5
300
400
500
600
700
800
900
1000
1100
Wavelength (nm)

FIG. 13

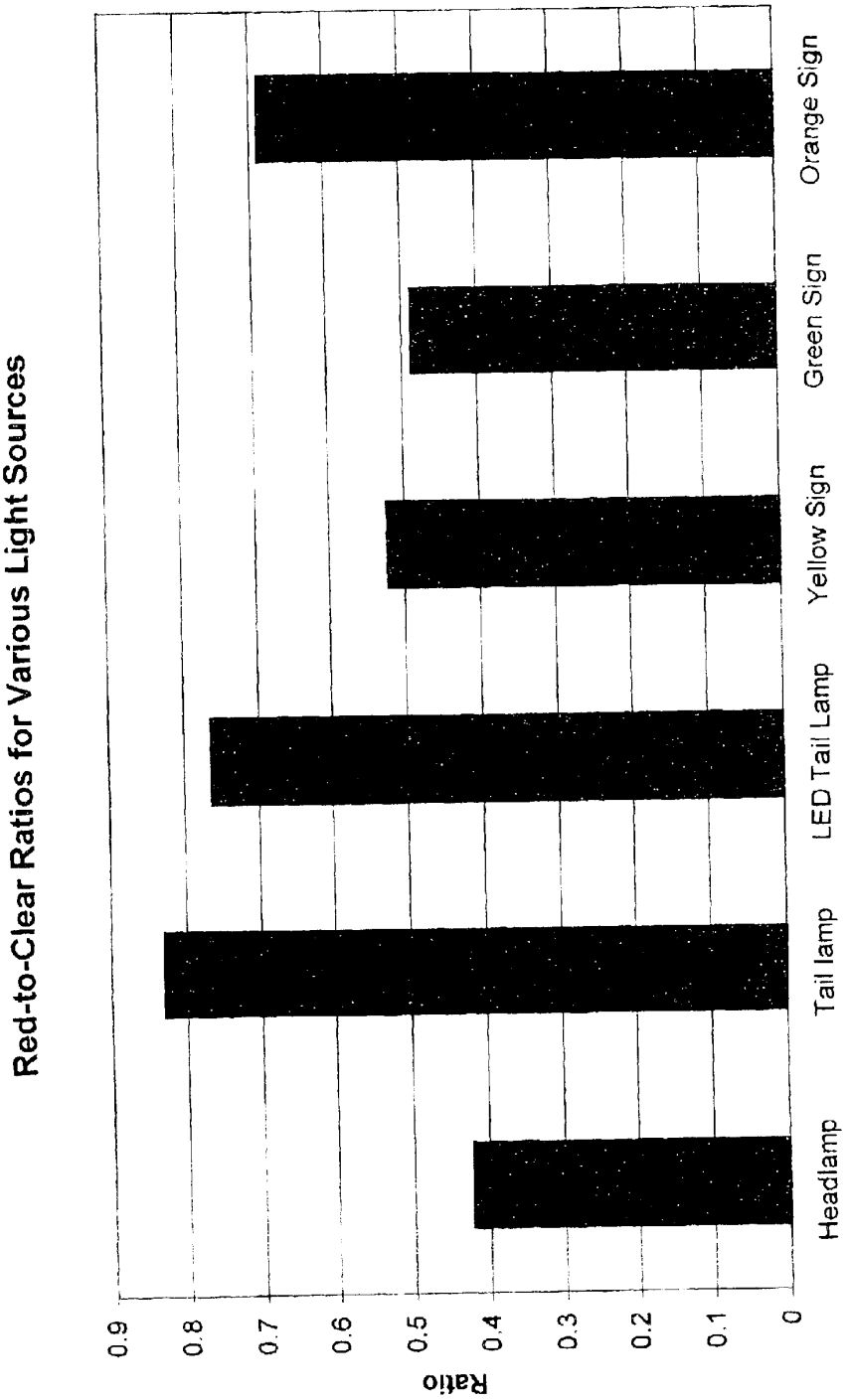
Red-to-Clear Ratios for Various Light Sources
Ratio
0.9
0.8
0.7
0.6
0.5
0.4
0.3
0.2
0.1
0
Headlamp
Tail lamp
LED Tail Lamp
Yellow Sign
Green Sign
Orange Sign

FIG. 14

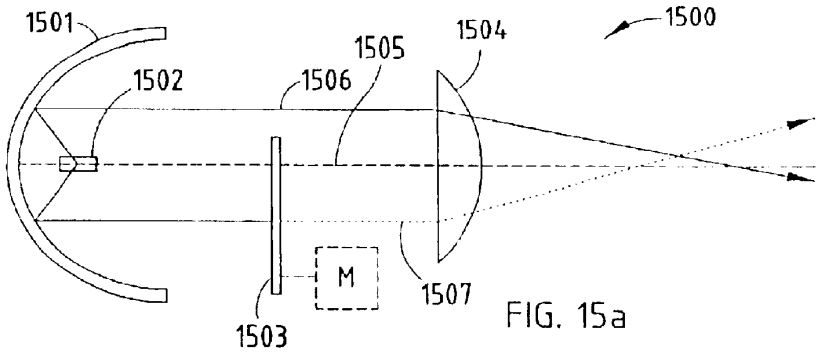

FIG. 15a

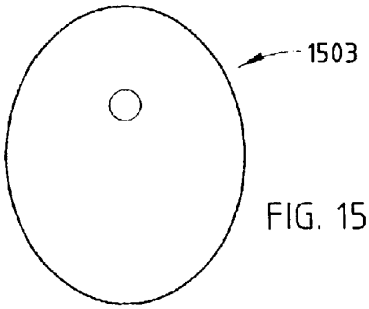

FIG. 15b

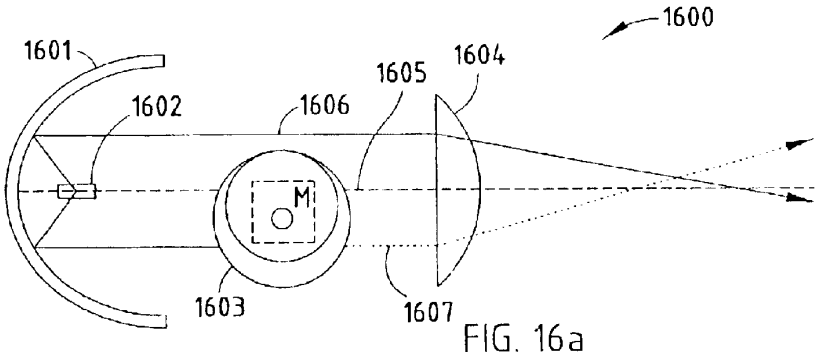

FIG. 16a

FIG. 16b

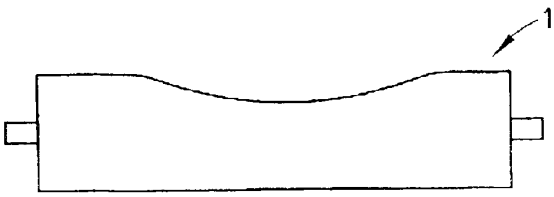

FIG. 16c

HEADLAMP CONTROL TO PREVENT GLARE

CROSS-REFERENCE TO RELATED APPLICATIONS

This application claims the benefit of U.S. Provisional Patent Ser. No. 60/339,762, entitled "HEADLAMP CONTROL TO PREVENT GLARE," which was filed Dec. 10, 2001, and which is hereby incorporated herein by reference in its entirety.

This application is a continuation-in-part of U.S. patent application Ser. No. 10/197,834, entitled "CONTINUOUSLY VARIABLE HEADLAMP CONTROL," filed Jul. 18, 2002, now U.S. Pat. No. 6,593,698, which is a continuation of U.S. patent application Ser. No. 09/938,774, entitled "CONTINUOUSLY VARIABLE HEADLAMP CONTROL," filed on Aug. 24, 2001, by Joseph S. Stam et al., now U.S. Pat. No. 6,429,594, which is a continuation of U.S. patent application Ser. No. 09/546,858, entitled "CONTINUOUSLY VARIABLE HEADLAMP CONTROL," filed on Apr. 10, 2000, by Joseph S. Stam et al., now U.S. Pat. No. 6,281,632, which is a continuation of U.S. patent application Ser. No. 09/157,063, entitled "CONTINUOUSLY VARIABLE HEADLAMP CONTROL," filed on Sep. 18, 1998, by Joseph S. Stam et al., now U.S. Pat. No. 6,049,171. The entire disclosure of each of the above-noted applications is incorporated herein by reference. Priority under 35 U.S.C. §120 is hereby claimed to the filing dates of each of the above-identified applications.

This application is related to U.S. patent application Ser. No. 10/208,142, entitled "LIGHT SOURCE DETECTION AND CATEGORIZATION SYSTEM FOR AUTOMATIC VEHICLE EXTERIOR LIGHT CONTROL AND METHOD OF MANUFACTURING," filed on Jul. 30, 2002, and which is hereby incorporated herein by reference in its entirety.

BACKGROUND OF THE INVENTION

The present invention is generally directed to controlling exterior vehicle lights of a motor vehicle and, more specifically, to controlling exterior vehicle lights of a motor vehicle so as to reduce glare to occupants of other motor vehicles and/or pedestrians, as well as providing optimal lighting for various roads/environmental conditions.

Currently, rearview mirror glare from trailing vehicles is a significant safety and nuisance concern, while driving at night. Sport utility vehicles (SUVs) and trucks, which generally have headlamps mounted much higher than passenger vehicles, may provide a much higher level of rearview glare than typical passenger cars. This glare may be especially disruptive in busy traffic situations where an SUV or truck is following a small passenger car. As a result of the glare experienced by drivers of passenger cars, when closely followed by an SUV or truck, various solutions, such as reducing the mounting height limit of headlamps, have been proposed to help alleviate this problem. Unfortunately, solutions such as reducing the mounting height limit of an SUV or truck's headlamps may generally require an objectionable change to the front end styling of the SUV or truck. Additionally, the physical construction of large SUVs and trucks may make it impossible to reduce the mounting height significantly.

Thus, what is needed is a technique for reducing the glare caused by low-beam headlamps of SUVs and trucks that does not involve lowering the mounting height of low-beam headlamps of the SUV/truck. Further, it would be desirable for the technique to function with both leading and on-coming vehicles and be applicable to all vehicle types, roads and environmental conditions.

SUMMARY OF THE INVENTION

An embodiment of the present invention is directed to a system for controlling at least one exterior vehicle light of a controlled vehicle and includes an array of sensors and a control unit. The array of sensors is capable of detecting light levels in front of the controlled vehicle. The control unit is in communication with the array of sensors and the at least one exterior vehicle light and determines an approximate distance and an angle from the at least one exterior vehicle light of the controlled vehicle to a leading vehicle. The control unit is also operable to control operation of the at least one exterior vehicle light as a function of the distance and angle, based on output from the array of sensors, and prevent the at least one exterior vehicle light from providing disruptive glare to a driver of the leading vehicle.

According to another embodiment of the present invention, an illumination control system for controlling at least one exterior vehicle light of a controlled vehicle includes an array of sensors and a control unit. The array of sensors generates electrical signals that are provided to the control unit, which is in communication with the at least one exterior vehicle light. The control unit is operable to acquire and process electrical signals received from the array of sensors to determine an illumination gradient associated with the at least one exterior vehicle light on a road surface. The control unit compares a sensed illumination range, which is based on the illumination gradient, to a desired illumination range and is operable to control the at least one exterior vehicle light to achieve a desired illumination range.

According to another embodiment of the present invention, an illumination control system for controlling at least one exterior vehicle light of a controlled vehicle includes a discrete light sensor and a control unit. The discrete light sensor generates electrical signals, which are provided to the control unit, which is in communication with the at least one exterior vehicle light. The control unit is operable to acquire and process electrical signals from the discrete light sensor to determine when the at least one exterior vehicle light should transition to a town lighting mode. The discrete light sensor provides an indication of an AC component present in ambient light and the control unit causes the at least one exterior vehicle light to transition to the town lighting mode when the AC component exceeds a predetermined AC component threshold.

According to still another embodiment of the present invention, an illumination control system for controlling the at least one exterior vehicle light of a controlled vehicle includes an imaging system and a control unit. The imaging system obtains an image to a front of the controlled vehicle and includes an array of sensors, which each generate electrical signals that represent a light level sensed by the sensor. The control unit is in communication with the at least one exterior vehicle light and is operable to acquire electrical signals received from the array of sensors and to separately process the electrical signals. The control unit is operable to examine a position and brightness of an on-coming vehicle headlamp over time, as indicated by the electrical signals provided by the array of sensors, to determine when a median width is appropriate for the activation of a motorway lighting mode and causes the at least one exterior vehicle light to transition to the motorway lighting mode responsive to the determined median width.

In another embodiment, an illumination control system for controlling at least one exterior vehicle light of a controlled vehicle includes an imaging system, a spatially controlled variable attenuating filter and a control unit. The imaging system obtains an image to a front of the controlled vehicle and includes an array of sensors that each generate electrical signals representing a light level sensed by the sensor. The filter is positioned approximate the at least one exterior vehicle light and the control unit is in communication with the at least one exterior vehicle light and the filter. The control unit is operable to acquire electrical signals received from the array of sensors and to process the electrical signals and control the filter to vary an illumination range of the at least one exterior vehicle light in response to the electrical signals and to control the filter to distinguish between vehicular and non-vehicular light sources.

In one embodiment, an illumination control system for controlling at least one exterior vehicle light of a controlled vehicle includes an imaging system, a spatially controlled reflector and a control unit. The imaging system obtains an image to a front of the controlled vehicle and includes an array of sensors that each generate electrical signals representing a light level sensed by the sensor. The reflector is positioned approximate the at least one exterior vehicle light and the control unit is in communication with the at least one exterior vehicle light and the reflector. The control unit is operable to acquire electrical signals received from the array of sensors and to process the electrical signals and control the reflector to vary an illumination range of the at least one exterior vehicle light in response to the electrical signals and to control the reflector to distinguish between vehicular and non-vehicular light sources.

In another embodiment, a system for controlling at least one headlamp of a controlled vehicle includes an array of sensors and a control unit. The array of sensors is capable of detecting light levels in front of the controlled vehicle and the control unit is in communication with the array of sensors and the at least one headlamp. The headlamp has a high color temperature and the control unit receives data representing the light levels detected by the array of sensors to identify potential light sources and distinguish light that is emitted from the headlamp and reflected by an object from other potential light sources. The control unit is also operable to control operation of the at least one headlamp as a function of the light levels output from the array of sensors.

In yet another embodiment a controllable headlamp includes at least one light source and a spatially controlled variable attenuating filter positioned approximate the at least one light source. The filter is controlled to provide a variable illumination range for the at least one light source and is controlled to distinguish between vehicular and non-vehicular light sources.

In still another embodiment, a controllable headlamp includes at least one light source and a spatially controlled reflector positioned approximate the at least one light source. The reflector is controlled to provide a variable illumination range for the at least one light source and is controlled to distinguish between vehicular and non-vehicular light sources.

These and other features, advantages and objects of the present invention will be further understood and appreciated by those skilled in the art by reference to the following specification, claims and appended drawings.

BRIEF DESCRIPTION OF THE DRAWINGS

In the drawings:

FIG. **1**A is an electrical block diagram of an exemplary imaging system;

FIG. **1**B is a side view of a leading vehicle illustrating various geometric considerations;

FIG. **2** is a graph depicting the illumination, as a function of the mounting height of a trailing vehicle's low-beam headlamps, on a surface at a rearview mirror position of the leading vehicle of FIG. **1**B;

FIG. **3** is a graph illustrating road surface illumination as a function of distance for various headlamp mounting heights;

FIG. **4** is a side view of another leading vehicle illustrating various geometric considerations;

FIG. **5** is a graph depicting the relationship of the position of an on-coming headlamp image, with respect to a center of the image, as captured by an array of sensors in a controlled vehicle, as a function of distance to an on-coming vehicle for various median widths;

FIG. **6**A is a side view of a high-performance headlamp that implements a mask, according to an embodiment of the present invention;

FIG. **6**B is a front view of the mask of FIG. **6**A;

FIG. **6**C is a side view of a high-performance headlamp that implements a mask, according to another embodiment of the present invention;

FIGS. **7**A–**7**B are front views of variable transmission devices that are used to control the illumination produced by headlamps of a vehicle, according to an embodiment of the present invention;

FIG. **8** is a side view of a headlamp that includes a plurality of individual light emitting diodes;

FIG. **9** is a diagram of a headlamp that utilizes a spatially controlled reflector;

FIG. **10** depicts plots of the spectral distributions of various vehicle exterior lights;

FIG. **11** depicts plots of the spectral reflectance ratios of various colored road signs;

FIG. **12** depicts plots of transmission factors of red and infrared filter material, according to an embodiment of the present invention;

FIG. **13** depicts plots of the quantum efficiency versus wavelength for an optical system, according to an embodiment of the present invention;

FIG. **14** depicts a graph of red-to-clear ratios for various light sources as detected by an optical system, according to an embodiment of the present invention;

FIG. **15**A is a side view of a headlamp that implements a rotatable mask, according to one embodiment of the present invention;

FIG. **15**B is a front view of the mask of FIG. **15**A;

FIG. **16**A is a side view of a headlamp that implements a rotatable mask, according to another embodiment of the present invention;

FIG. **16**B is a front view of the mask of FIG. **16**A in a first position; and

FIG. **16**C is a front view of the mask of FIG. **16**A in a second position.

DETAILED DESCRIPTION OF THE PREFERRED EMBODIMENTS

The present invention is directed to a system for controlling at least one exterior vehicle light (e.g., low-beam

headlamps, high-beam headlamps, tail lamps, fog lamps, etc.) of a controlled vehicle and includes an array of sensors and a control unit. The control unit is in communication with the array of sensors and the at least one exterior vehicle light and is capable of determining a distance and an angle from the at least one exterior vehicle light of the controlled vehicle to a leading vehicle. The control unit is operable to control operation of the at least one exterior vehicle light as a function of the distance and angle, based on the output from the array of sensors, and prevent the at least one exterior vehicle light from providing disruptive glare to a driver of the leading vehicle.

In another embodiment of the present invention, an illumination control system for controlling the at least one exterior vehicle light of a controlled vehicle includes an array of sensors and a control unit. The control unit is operable to acquire and process electrical signals received from the array of sensors to determine an illumination gradient associated with the at least one exterior vehicle light on a road surface. The control unit compares a sensed illumination range, which is based on the illumination gradient, to a desired illumination range and is operable to control the at least one exterior vehicle light to achieve a desired illumination range.

In yet another embodiment of the present invention, an illumination control system for controlling the at least one exterior vehicle light of a controlled vehicle includes a discrete light sensor and a control unit. The control unit is operable to acquire and process electrical signals from the discrete light sensor, which provides an indication of an AC component present in ambient light. The control unit causes the at least one exterior vehicle light to transition to the town lighting mode when the AC component exceeds a predetermined AC component threshold.

According to still another embodiment of the present invention, an illumination control system for controlling the at least one exterior vehicle light of a controlled vehicle includes an imaging system and a control unit. The imaging system obtains an image to a front of the controlled vehicle and includes an array of sensors which each generate electrical signals that represent a light level sensed by the sensor. The control unit is operable to examine a position and brightness of an on-coming vehicle headlamp over time, as indicated by the electrical signals provided by the array of sensors, to determine when a median width is appropriate for the activation of a motorway lighting mode.

Referring now to FIG. **1**A, a block diagram of a control system according to an embodiment of the present invention is shown. A control system **40** for continuously variable headlamps includes imaging system **42**, control unit **44** and at least one continuously variable headlamp system **46**. The control unit **44** may take various forms, such as a microprocessor including a memory subsystem with an application appropriate amount of volatile and non-volatile memory, an application specific integrated circuit (ASIC) or a programmable logic device (PLD). The imaging system **42** includes vehicle imaging lens system **48** operative to focus light **50** from a region generally in front of a controlled vehicle onto image array sensor **52**. The imaging system **42** is capable of determining lateral and elevational locations of headlamps from on-coming vehicles and tail lamps of leading vehicles. The vehicle imaging lens system **48** may include two lens systems, one lens system having a red filter and one lens system having a cyan filter, which permits the image array sensor **52** to simultaneously view a red image and a cyan image of the same region in front of the controlled vehicle and thereby discriminate between tail lamps and headlamps. The image array sensor **52** may include an array of pixel sensors.

The imaging system **42** may include an ambient light lens system **54** operable to gather light **56** over a wide range of elevational angles for viewing by a portion of the image array sensor **52**. Alternatively, the light **50**, focused through the vehicle imaging lens system **48**, may be used to determine ambient light levels. Additionally, a light sensor completely separate from the imaging system **42** may be used to determine ambient light levels. In one embodiment, the imaging system **42** is incorporated into an interior rearview mirror mount. In this case, the imaging system **42** may be aimed through a portion of the windshield of the controlled vehicle that is cleaned by at least one windshield wiper.

The control unit **44** accepts pixel gray scale levels **58** and generates image sensor control signals **60** and headlamp illumination control signals **62**. The control unit **44** includes an imaging array control and analog-to-digital converter (ADC) **64** and a processor **66**. The processor **66** receives digitized image data from and sends control information to the imaging array control and ADC **64**, via serial link **68**.

The control system **40** may include vehicle pitch sensors **70**, to detect the pitch angle of a controlled vehicle relative to the road surface. Typically, two of the vehicle pitch sensors **70** are desired. Each of the sensors **70** are mounted on the chassis of the controlled vehicle, near the front or rear axle, and a sensor element is fixed to the axle. As the axle moves relative to the chassis, the sensor **70** measures either rotational or linear displacement. To provide additional information, the control unit **44** may also be connected to a vehicle speed sensor **72**, one or more moisture sensors **74** and may also be connected to a GPS receiver, a compass transducer and/or a steering wheel angle sensor.

Precipitation such as fog, rain or snow may cause excessive light from headlamps **22** to be reflected back to the driver of the controlled vehicle. Precipitation may also decrease the range at which on-coming vehicles and leading vehicles may be detected. Input from the moisture sensor **74** may therefore be used to decrease the full range of illumination.

A headlamp controller **76** controls at least one of the continuously variable headlamps **22**. When multiple headlamp controllers **76** are utilized, each of the headlamp controllers **76** accepts the headlamp illumination control signals **62**, from control unit **44**, and affects the headlamps **22** accordingly to modify an illumination range of light **78** leaving headlamp **22**. Depending on the type of continuously variable headlamp **22** used, the headlamp controller **76** may vary the intensity of the light **78** leaving the headlamp **22**, may vary the direction of the light **78** leaving the headlamp **22**, or both.

The control unit **44** may acquire an image covering a glare area, which includes points at which a driver of an on-coming vehicle or leading vehicle would perceive the headlamps **22** to cause excessive glare. The control unit **44** processes the image to determine if at least one vehicle is within the glare area. If at least one vehicle is within the glare area, the control unit **44** changes the illumination range. Otherwise, the headlamps **22** are set to a full illumination range.

The changes to illumination range and setting the headlamps **22** to a full illumination range typically occur gradually as sharp transitions in the illumination range may startle the driver of the controlled vehicle, since the driver may not be aware of the precise switching time. A transition time of between one and two seconds is desired for returning to full

illumination range from dimmed illumination range, corresponding to low-beam headlamps. Such soft transitions in illumination range also allow the control system **40** to recover from a false detection of an on-coming vehicle or leading vehicle. Since image acquisition time is approximately 30 ms, correction may occur without the driver of the controlled vehicle noticing any change.

For a controlled vehicle with both high-beam and low-beam headlamps **22**, reducing illumination range may be accomplished by decreasing the intensity of high-beam headlamps **22** while increasing the intensity of low-beam headlamps **22**. Alternately, low-beam headlamps can be left on continuously for ambient light levels below a certain threshold. For a controlled vehicle with at least one headlamp **22** having a variable horizontal aimed direction, the aim of headlamp **22** may be moved away from the direction of an on-coming vehicle when the illumination range is reduced or changed. This allows the driver of the controlled vehicle to better see the edge of the road, road signs, pedestrians, animals and the like that may be on the curb side of the controlled vehicle. The control unit **44** may determine if any leading vehicle is in a curb lane on the opposite side of the controlled vehicle from on-coming traffic. If a leading vehicle is not in the curb lane, reducing the illumination range may include aiming headlamps **22** away from the direction of on-coming traffic. If a leading vehicle is detected in a curb lane, the illumination range may be reduced without changing the horizontal aim of headlamps **22**.

Automatic Aiming of Low-Beam Headlamps to Prevent Glare to Other Vehicles

Set forth below are some computational examples that illustrate the relative rearview glare increase provided by high mounted low-beam headlamps over standard passenger car low-beam headlamps, as seen by a leading vehicle. These examples are approximate computations only and are not the result of specific measurements. The computations assume no obstruction between the low-beam headlamp of a trailing vehicle and the rearview mirror surface of the leading vehicle and do not account for rear window transmission loss. FIG. **1**B depicts a leading vehicle **102** that is being followed by a trailing vehicle (not shown) at a distance of about 15 meters, with respect to low-beam headlamps of the trailing vehicle and an internal rearview mirror of the leading vehicle.

The illumination at the leading vehicle's interior rearview mirror, located about 1.2 meters above the road, is determined by: computing the horizontal and vertical angle to each of the headlamps (assuming a headlamp separation of about 1.12 m), determining the intensity of the headlamps at that angle and dividing the determined intensity by the distance squared. Information on the average position of automotive rearview mirrors can be obtained from a paper entitled "Field of View in Passenger Car Mirrors," by M. Reed, M. Lehto and M. Flannagan (published by the University of Michigan Transportation Research Institute (UMTRI-2000-23)), which is hereby incorporated herein by reference in its entirety. Information on the intensity of average low-beam headlamps can be obtained from a paper entitled "High-Beam and Low-Beam Headlighting Patterns in the U.S. and Europe at the Turn of the Millennium," by B. Schoettle, M. Sivak and M. Flannagan (published by UMTRI (UMTRI 2001-19)), which is also hereby incorporated herein by reference in its entirety.

FIG. **2** is a graph that depicts the illumination (as a function of mounting height of the trailing vehicle's low-beam headlamps) on a surface at the rearview mirror position of a leading vehicle, assuming no obstructions and based on the information set forth above. The graph of FIG. **2** illustrates the low-beam headlamp mounting height over the legal range, specified in FMVSS 108, of 0.56 meters to 1.37 meters. A typical passenger car may have headlamps mounted at about 0.62 meters. In this case, the glare on the rearview mirror of the leading vehicle is about 2.4 lux. For a vehicle with headlamps mounted at 1 meter, the glare on the rearview mirror of the leading vehicle increases to 5.8 lux. The situation becomes much more severe with large trucks and SUVs with low-beam headlamp mounting heights higher than 1 meter. At the current U.S. maximum headlamp mounting height, i.e., 1.37 meters, the glare at the rearview mirror is approximately 91 lux. This large increase is due to the fact that the intensity of low-beam headlamps is greatest at about 1.5 degrees below horizontal and decreases rapidly with increased vertical angle.

The problem of increased rearview mirror glare with increased headlamp mounting height could be solved by requiring manufacturers of larger vehicles to aim their headlamps further downward when they are mounted above a predetermined height. However, this solution comes at the cost of decreased illumination range during normal driving, when no leading vehicle is present. For example, in order for a vehicle with headlamps mounted at 1 meter to produce the glare equivalent of a vehicle with headlamps mounted at 0.62 meters (i.e., at 15 meters), the vehicle whose headlamps are mounted at 1 meter must be aimed downward an additional 1.4 degrees. FIG. **3** depicts three curves of road illumination as a function of distance for: a passenger car with low-beam headlamps mounted at 0.62 meters, a truck or SUV with low-beam headlamps mounted at 1 meter and a truck or SUV with low-beam headlamps mounted at 1 meter and aimed downward an additional 1.4 degrees. As is shown in FIG. **3**, the downward aim reduces the visibility distance of the low-beam headlamps significantly. As a result, simply aiming the headlamps down is generally unacceptable during normal driving conditions, when no leading vehicle is present.

Additional information about the effects of mirror glare resulting from different mounting heights can be found in Society of Automotive Engineers (SAE) publication J2584 entitled "Passenger Vehicle Headlamp Mounting Height," which is also hereby incorporated herein by reference in its entirety. This study recommends that headlamp mounting height be limited to 0.85 meters to avoid projecting undue glare into leading vehicles.

A solution which limits the glare to leading vehicles, while preserving the desired mounting height of the headlamps, involves detecting the presence of leading vehicles and adjusting the aim of the low-beam headlamps of the trailing vehicle, accordingly. Systems to vary the aim of headlamps are currently commercially available on many production vehicles. These systems typically use sensors in the axles of a vehicle to detect changes in road pitch and vary the aim of the headlamps to insure a constant visibility distance. Other systems provide motors for adjustment of the aim of the headlamps, but rely on the driver to manually adjust the aim of the headlamps through a manual adjustment knob located in the vehicle. Although such systems were not designed or used in conjunction with a means to detect a leading vehicle to automatically reduce the angle of the headlamps, when such vehicles are detected, such systems can be used for this purpose.

In one embodiment, such a leading vehicle detection means may include a camera (i.e., an array of sensors) and

an image processing system as is described in U.S. Pat. No. 6,281,632 entitled "CONTINUOUSLY VARIABLE HEADLAMP CONTROL," issued Aug. 28, 2001, to Joseph S. Stam et al., which is hereby incorporated herein by reference in its entirety, and PCT Application No. PCT/US01/08912, entitled "SYSTEM FOR CONTROLLING EXTERIOR VEHICLE LIGHTS," published Sep. 27, 2001 (WO 01/70538), which is also hereby incorporated herein by reference in its entirety. Such systems are capable of detecting the tail lamps of leading vehicles and may determine the approximate distance to a leading vehicle by the brightness of the tail lamps in an image or by the separation distance between the two tail lamps of the leading vehicle. Since tail lamps are typically mounted below the rear window of most vehicles, the tail lamps' position in the image can also be used to determine if excess glare is likely to be projected into the rearview mirror of the leading vehicle.

FIG. **4** depicts a leading vehicle **402** (with tail lamps located 1 meter above the road) whose rearview mirror is 15 meters ahead of low-beam headlamps of a trailing vehicle (not shown). The angle between the tail lamps of the leading vehicle and the camera of the trailing vehicle can be determined from the position of the tail lamps in the image. It should be appreciated that the difference in mounting height between a camera mounted within a vehicle and low-beam headlamps of the vehicle is fixed and, therefore, can be known for any given vehicle. As mentioned above, the distance to the leading vehicle can be determined in a number of ways. For example, the distance to the leading vehicle can be estimated by the brightness of the tail lamps of the leading vehicle in the image. Alternatively, for most vehicles with two tail lamps, the distance between the two tail lamps, which remains within a reasonable range for production vehicles, can be used to estimate the distance to the leading vehicle. For motorcycles or vehicles with only one tail lamp, brightness can be used to estimate the distance between the trailing and leading vehicles. Finally, other devices for determining distance, such as a radar, laser or ultrasonic sensors, may be used. Such systems are already incorporated in many production vehicles for use in conjunction with, for example, parking aids and adaptive cruise control systems. For an example of one such system see U.S. Pat. No. 6,403,942, entitled "AUTOMATIC HEADLAMP CONTROL SYSTEM UTILIZING RADAR AND AN OPTICAL SENSOR," the entire disclosure of which is hereby incorporated herein by reference.

Once an estimate of the distance from the trailing vehicle to the leading vehicle is determined, the angle between the controlled vehicle's headlamps and the leading vehicle (e.g., the rearview mirror of the leading vehicle) can be determined. A detailed method for analyzing an image to determine the location of light sources within an image is set forth in PCT Application No. PCT/US01/08912. Then, if the trailing vehicle is close enough to the leading vehicle for glare to disrupt the driver of the leading vehicle, the aim of the headlamps can be set downward to a level which does not cause disruptive glare (alternatively, or in addition, the intensity of the headlamps may be adjusted). When no leading vehicles are within a close range, the headlamps of the trailing vehicle can be aimed normally for proper road illumination. Modifications to the above embodiment may include a variety of methods for reducing the intensity of light directed towards the detected light source. These methods include, but are not limited to: modifying the horizontal direction aim of the headlamps, modifying the vertical direction aim of the headlamps, modifying the intensity of the headlamps, enabling or disabling one of a plurality of exterior lights and selectively blocking or attenuating light from the exterior lights in the direction of the detected light source.

Automatic Aiming of Headlamps Using an Image Sensor

As headlamp technology improves and vehicle headlamps have become brighter, the potential for causing glare to on-coming and leading drivers has become greater. Low-beam headlamps, which are designed to prevent glare to on-coming drivers, are typically aimed 1.5 degrees downward and about 1.5 degrees right, with a sharp reduction in intensity above the peak. However, variations in the road and in vehicle loading can regularly cause the peak of these headlamps to shine directly into the eyes of an on-coming driver. This problem becomes much more severe with new technology headlamps, such as high-intensity discharge (HID) headlamps, and, as a result, various groups have attempted to design systems that perform active leveling of these brighter headlamps. Current automatic leveling systems provide sensors on each axle to determine the pitch of the vehicle, relative to the road. Such systems may also incorporate vehicle speed sensing to anticipate variations in vehicle pitch with acceleration. These systems require that the headlamp aiming, relative to the vehicle, be known and calibrated to properly aim the headlamps to compensate for vehicle pitch variations.

An embodiment of the present invention generally improves on prior automatic headlamp leveling systems by sensing the actual beam pattern, provided by, for example, the low-beam headlamps, on the road separately, or in combination with the sensing of the vehicle's pitch. By looking at the illumination gradient on the road, it is possible to compare the actual illumination range to the desired illumination range and compensate for variance by adjusting the headlamp's aim. The desired illumination range may be constant or may be a function of the current vehicle speed, ambient light level, weather conditions (rain/fog/snow), the presence or absence of other vehicles, the type of roadway or other vehicle and/or environmental conditions. For example, a driver of a vehicle traveling at a high rate of speed may benefit from a longer illumination range, while drivers traveling in fog may benefit from headlamps aimed lower. Because road reflectance is generally variable, it is not normally sufficient to look only at the illumination on the road to determine the illumination range. Rather, it is generally useful to look at the light level gradient with increasing distance on the road surface.

As is shown in FIG. **3**, road illumination decreases as the distance from the vehicle increases. By looking at a vertical strip of pixels in the image corresponding to a particular horizontal angle and a range of vertical angles and comparing the change in brightness across this strip to an appropriate curve in FIG. **3**, based on the mounting height of the low-beam headlamps for a particular vehicle, the current aim of the headlamps can be determined and adjusted to provide a desired illumination range. Alternatively, a vertical linear array of photosensors can be used to image road illumination and, thus, provide the road illumination gradient.

Further, in certain circumstances, reflections from lane markings can be used to indicate when a road bend is ahead of the controlled vehicle such that a direction of the headlamps of the controlled vehicle can be controlled to bend with the road. Alternatively, in vehicles that include a navigation system, e.g. a land-based system (such as Loran) or satellite-based system (such as a global positioning sys-

tem (GPS)), a direction of the headlamps of the controlled vehicle can be varied based on a location of the vehicle.

Control of AFS Lighting Using an Image Sensor

Adaptive front lighting systems (AFSs) are a new generation of forward lighting systems, which contain a variety of technologies for improving a vehicle's forward illumination. In addition to standard low and high-beams, AFS lighting systems may include, for example, the following illumination modes:

- bending lights—lamps in which the aim is varied horizontally or separate lamps are lit to provide better illumination when turning;
- bad weather lights—lamps which provide good spread illumination on the road immediately in front of a vehicle to aid the driver in seeing obstacles in rain and fog;
- motorway lighting—lamps which provide a greater illumination range at higher speeds when traveling on a motorway (i.e., a road with lanes in opposite directions separated by a median); and
- town lighting—lamps with a shorter and wider illumination range appropriate for driving in town and reducing glare to pedestrians and other drivers.

The goal of a typical AFS lighting system is to provide automatic selection of the different lighting modes. For example, rain sensing or fog sensing can be used to activate bad weather lights and steering wheel angle can be used to activate bending lights. However, the activation of the other illumination modes is not as straight forward. That is, activation of motorway lighting modes and town lighting modes requires a knowledge of the environment. Vehicle speed can be used to activate town lighting; however, it is possible that the illumination range may be unnecessarily reduced when traveling at a low speed out of town. Also, ambient light level may be a useful indication of traveling in a town. Finally, as is disclosed in U.S. patent application Ser. No. 09/800,460, entitled "SYSTEM FOR CONTROLLING EXTERIOR LIGHTS," now U.S. Pat. No. 6,587,573, which is hereby incorporated herein by reference in its entirety, a vehicle including a global positioning system (GPS) with a map database indicating the types of roads on which a vehicle is traveling may be used to determine a proper mode of lighting. However, such systems are expensive and map data may not be available for all areas of the world. Additionally, inaccuracies in GPS systems may occasionally cause such a system to incorrectly identify the road on which a vehicle is traveling.

According to the present invention, a town is detected through the use of an optical sensor. A discrete light sensor such as that described in PCT Application No. PCT/US00/00677, entitled "PHOTODIODE LIGHT SENSOR," by Robert H. Nixon et al. and published Jul. 27, 2000 (WO 00/43741), which is hereby incorporated herein by reference in its entirety, may be utilized. This sensor may be used to measure the ambient light and also measure the 120 Hz (or 100 Hz in Europe) intensity ripple component, produced by discharge street lighting powered by a 60 Hz AC source, by obtaining several light level measurements during different phases of the intensity ripple. If there is a significant AC component in the ambient light level and the vehicle speed is low (for example, less than 30 mph) it is likely that the vehicle is traveling in a town with significant municipal lighting and town lighting can be activated. By examining the quantity of AC lights and the vehicle's speed, town driving conditions can be accurately determined. The magnitude of the AC component may be used in combination with the ambient light level and the vehicle's speed to make a proper determination of the use of town lighting. For example, if the ambient light level is sufficient such that there would not be a significant safety risk from the reduced illumination range, the speed of the vehicle is indicative of driving in a town (e.g., below about 30 mph) and there is a significant AC component in the ambient lighting, town lighting may be activated.

Alternatively, the transition from normal low-beam lighting to town lighting may be continuous with the illumination range being a continuous function of ambient lighting and vehicle speed so as to produce a sufficient illumination range for given conditions. This provides the benefit of ensuring a safe illumination range and minimizing the glare to pedestrians or other vehicles. Finally, as an alternative to the use of a discrete light sensor, a sensor array, such as an image sensor, may be used to identify street lamps and activate town lighting if the number of streetlamps detected in a period of time exceeds a threshold (along with consideration of the vehicle's speed and ambient lighting). Methods for detecting streetlamps using an image sensor are described in detail in the above incorporated patent and patent application. The light sensor may be provided in various places throughout a motor vehicle, e.g., provided in a rearview mirror housing. Further, such a light sensor may also be used for various other functions (e.g., sun load), such as those set forth in U.S. Pat. No. 6,379,013, entitled "VEHICLE EQUIPMENT CONTROL WITH SEMICONDUCTOR LIGHT SENSORS," which is hereby incorporated herein by reference in its entirety.

Motorway conditions can be also be determined by using an image sensor to detect the lane separation or median of a motorway. This can be accomplished by directly looking at the angular movement of the headlamps of on-coming vehicles in several subsequent images. The detection of the movement of an object in a series of images is further described in U.S. patent application Ser. No. 09/799,310 entitled "IMAGE PROCESSING SYSTEM TO CONTROL VEHICLE HEADLAMPS OR OTHER VEHICLE EQUIPMENT," filed Mar. 5, 2001, to Joseph S. Stam et al., now U.S. Pat. No. 6,631,316, which is hereby incorporated herein by reference in its entirety, FIG. **5** illustrates three curves, which represent different motorway median widths, and how the position of an on-coming headlamp in an image varies as a function of the distance between two vehicles that are traveling in different directions are converging. By examining the position and brightness of the headlamp in an image and by examining how the position of the headlamp image varies over time for the given controlled vehicle's speed, the approximate spacing of the median can be determined and motorway lighting can be activated if the median is of a sufficient width. Finally, if no headlamps are present, and no tail lamps of leading vehicles are present, high-beams can be activated.

Headlamp with Controllable Beam Pattern

FIG. **6A** schematically illustrates an exemplary high-performance headlamp, commonly referred to as a projector headlamp, which is utilized in conjunction with a mask **603**. A bulb **602** is placed in front of a reflector **601**. The bulb **602** may be of a conventional incandescent (e.g., tungsten-halogen) type, high-intensity discharge (HID) type or other suitable bulb type, or may be the output from a remote light source as is described further below. A lens **604** directs light from the bulb **602** and reflected by the reflector **601** down the road. The mask **603** establishes a cutoff point to prevent

light above the horizon **605** from being directed down the road. The mask **603** absorbs or reflects light rays, such as light ray **607**, which would cause glare to another vehicle. Light rays, such as light ray **606**, which project below the cutoff point, pass through lens **604** as they are not blocked by the mask **603**. The mask **603**, typically, has a shape, such as that shown in FIG. **6**B, which contains a step allowing a slightly higher cutoff point to the right of the vehicle.

A modification to this type of lamp construction includes a solenoid to control the mask **603**. Using the solenoid, the mask **603** can be removed from the position in front of the bulb **602**. When removed, rays, such as the ray **607**, project through the lens **604** and down the road, thus, establishing a much longer illumination range. In this way, the lamp with mask **603** removed can function as a high-beam headlamp.

In the present invention, the mask **603** may also be controlled by a motor to move vertically relative to the bulb **602**, lens **604** and reflector **601**, as shown in FIG. **6**C. By lowering the mask **603**, the cutoff angle is raised and the illumination range is extended. By raising the mask **603**, the cutoff angle is lowered and illumination range is reduced. The movement of the mask **603** can be used to establish different lighting functions, such as town or motorway lighting, or to increase the illumination range gradually with increased speed. Additionally, the movement of the mask **603** can also be used to establish the vertical aim of the headlamp and therefore compensate for vehicle pitch variations as described herein above. This method of aiming the headlamp is advantageous because only the relatively small mask **603** requires movement, rather than the entire lamp set which is moved in some auto-leveling systems today.

In another embodiment of the present invention, the mask **603** is replaced with a spatially controlled variable attenuating filter. This filter can be formed as an electrochromic variable transmission window, which has the capability to selectively darken various regions of the window. This window may contain a liquid or solid state (e.g., tungsten oxide) electrochromic material that is capable of withstanding the high temperatures achieved in close proximity to the bulb. Alternatively, this window may be a liquid crystal device (LCD), a suspended particle device or other electrically, chemically or mechanically variable transmission device. A suitable electrochromic device is disclosed in U.S. Pat. No. 6,020,987 entitled "ELECTROCHROMIC MEDIUM CAPABLE OF PRODUCING A PRESELECTED COLOR," which is hereby incorporated herein by reference in its entirety.

An example of such a variable transmission device **700** is shown in FIGS. **7**A and **7**B. The device **700** is constructed using two pieces of glass with electrochromic material contained between. On the inner surface of each piece of glass is a transparent conductive electrode, such as indium tin oxide (ITO), which is patterned on at least one of the surfaces to selectively darken different regions of the window by electronic control. In FIG. **7**A, these regions are horizontal strips **701**, which may optionally contain a slight step. By selectively darkening all the of strips **701**, below a certain level, a variable cutoff can be achieved analogous to moving the mask **603** up or down as previously described with reference to FIG. **6**C. While there is some space shown for clarity between each of the strips **701**, in practice, this spacing is very small. Therefore, the absorbing region below the cutoff is essentially contiguous. Finally, it is possible to only partially darken the various stripes, thereby forming a more gradual cutoff.

Alternatively, the window **700** may contain several independently controlled blocks **702** as shown in FIG. **7**B. There may be any number of blocks, depending on the granularity of control that is desired. By selectively darkening these blocks, almost any desired beam pattern can be achieved. For example, all blocks below a cutoff may be darkened to achieve a low-beam pattern. All blocks may be transparent to achieve a high-beam pattern. If an on-coming or preceding vehicle is detected by an image sensor, as previously described, blocks can be selectively darkened to block light corresponding to the angles at which the vehicle is detected and thereby glare to this vehicle can be prevented without compromising the illumination to the remainder of the forward field. Further, as used herein, distinct beam patterns may be achieved in various manners, e.g., changing the intensity or one or more light sources, changing the aiming direction of one or more light sources, changing the distribution of light provided by one or more light sources and/or activating multiple light sources in combination.

Yet another alternative is for mask **603** to be constructed as a spatially controlled reflector. Such a reflector may be a reversible electrochemical reflector, such as that described in U.S. Pat. Nos. 5,903,382; 5,923,456; 6,166,847; 6,111,685 and 6,301,039, the entire disclosures of which are hereby incorporated herein by reference. In such a device, a reflective metal is selectively plated and de-plated on a surface to switch between a reflective and transmissive state. A metal-hydride switchable mirror, available from Phillips electronics, may also be used to provide a spatially controlled reflector. The spatially controlled reflector may be formed as a single contiguous reflector, allowing for a switch from high to low-beam or may be patterned, such as in FIGS. **7**A and **7**B, to allow activation of individual segments of the mirror and, thus, provide spatial control of the transmitted beam. The use of a spatially controlled mirror provides the advantage that a reflective device reflects light rays **607** back into reflector **601** and, thus, these rays are conserved, rather than absorbed and, as such, are available to be projected in other areas of the beam. This provides a headlamp with improved efficiency, as compared to headlamps that absorb light rays to provide a desired illumination pattern. Additionally, by reflecting light rays, rather than absorbing the light rays, the mask may not become as hot and, thus, the headlamp becomes potentially more robust.

In yet another embodiment, a spatially controlled reflector is used to construct a headlamp in accordance with FIG. **9**. A bulb **901** and reflector **902** form a light source, which projects incident rays **906** onto a spatially controlled reflector **903**. The light source may be any type of light source suitable for automotive use, such as a halogen source, a high-intensity discharge (HID) source or a light emitting diode (LED) source. Incident rays **906** may also come from a remote light source through a fiber bundle or light pipe. The spatially controlled reflector **903** contains a plurality of switchable mirrors **905**, which can be turned on and which reflect incident rays **906** (as reflected rays **907**), which are then projected by lens **904** down the road. When turned off, the incident rays **906** are reflected away from the lens **904**, transmitted through the reflector **903** or absorbed and, thus, not projected by the lens **904**. Alternatively, the rays may be redirected to increase the illumination of other portions of a headlamp beam.

The spatially controlled reflector may be, for example, a custom designed digital micro-mirror device (DMD) available from Texas Instruments. DMDs are micro-machined arrays of tiny mirrors which can be switched between two angles and are currently widely used for video projectors. The application of a DMD to produce a spatially configurable headlamp is analogous to that of a video projector.

However, high resolution, variable color and video frame rates that are necessary for video projectors are not necessary in a headlamp that utilizes a DMD. Thus, a control system for a headlamp can be simpler than a control system for a video projector. However, the present invention is not limited to any particular number of mirrors or switching rate. As few as one mirror for switching between two beam patterns to many thousands of mirror segments for providing a completely configurable beam pattern may be used.

As an alternative to a DMD, the spatially controlled reflector may be constructed as a reversible electro-chemical reflector or a metal-hydride switchable mirror as described above. Finally, a solid mirror with a patterned attenuating filter (such as an electrochromic filter or LCD) placed in front of the mirror may be used to provide the same function. It should be appreciated that controllable reflectors and/or attenuators may be used to select a beam pattern, based upon one or more driving conditions, at which point a control unit (based upon input received from a sensor array) may cause the reflector and/or attenuator to redirect or inhibit light that would cause glare to a sensed object. As is described herein, systems implementing a control unit in conjunction with a sensor array are configurable to distinguish between reflected light and light from another light source, through manipulation of a light source or sources of a controlled vehicle headlamp. In general, the light source(s) of the headlamp embodiments of FIGS. **8** and **9** can be cycled such that reflected light can be distinguished from light from another light source. Further, depending upon the construction of the headlamp, the embodiment of FIGS. **7A–7B** may also be cycled to distinguish reflected light from light from another light source.

The embodiment of FIG. **9** generally functions in a similar manner as the previously described embodiments. By selecting which mirrors or mirror segments are on, the on/off duty cycle of the mirror segments, or if the mirror segments are continuously variable, the reflectance levels of any conceivable beam pattern can be achieved. The lamp can provide a basic low-beam function and/or provide high-beams, bending lamps, motorway lighting, bad weather lighting or any intermediate state. Additionally, when used with a camera to detect the direction to other vehicles, mirrors can be turned off to prevent light rays in that direction from being projected and, thus, glaring the other vehicle. Further, as mentioned above, the mirrors may be controlled such that reflected light, e.g., a non-vehicular light source can be distinguished from light provided by another light source, e.g., a vehicular light source.

Yet another headlamp configuration suitable for use with the present invention is described with reference to FIG. **8**. In this embodiment, the reflector **601**, bulb **602**, and mask **603** are replaced by a high-intensity LED array **801**, which is placed approximately in the focal plane of the lens **604**. High intensity LED arrays suitable for use as automotive headlamps are described in PCT application PCT/US01/08912, previously incorporated herein by reference, and in U.S. patent application Ser. No. 09/835,238 to Roberts et al., filed Apr. 13, 2001. These arrays may produce white light illumination through a binary-complementary combination of amber and blue-green LED emitters.

LEDs **802** or groups of LEDs **802** in the LED array **801** are configured to be independently, and optionally variably, energized by electronic control unit. The light from LEDs **802** (or groups of closely spaced LEDs) is projected to a particular region in front of the lamp by the lens **604**. By selectively energizing these LEDs **802**, a desired beam pattern can be achieved in a fashion similar to that achieved by selectively darkening various blocks **702** in the previously described embodiment of FIG. **7**B. For example, all LEDs below a cutoff point may be energized to produce a desired illumination range. If other vehicles are identified by an imaging system, LEDs which project light in the direction of the identified vehicle may be shut off or reduced in intensity to prevent glare to the vehicle. All other LEDs may remain lit to provide illumination in regions where no vehicles are present. Further, in headlamps incorporating LEDs, a portion of the LEDs can be dimmed or turned off to distinguish on-coming vehicles from other light sources, such as reflectors.

The above described embodiments provide headlamps with a controllable and reconfigurable beam pattern. These headlamps may be used with the methods described above to provide a fully automatic vehicle forward light system, which can provide numerous functions, including: low-beams, high-beams, motorway lighting, town lighting, bad weather lighting, bending lamps, auto leveling and anti-glare control to prevent glare to on-coming or preceding drivers. These particular lighting modes are only exemplary and control may switch between discrete modes or may be continuous.

A variety of sensors may provide input to a control system to determine the appropriate beam pattern for the given driving conditions. These sensors may include, for example, a camera, ambient light sensor, speed sensor, steering wheel angle sensor, temperature sensor, compass, a navigation system (e.g., a land-based (such as Loran) or satellite-based (such as GPS), pitch sensors and various user input switches. Additionally, it is envisioned that a driver input may be provided for setting various preferences, such as the thresholds for switching between various beam patterns, the brightness of the lamps, the sharpness of beam cutoffs, the color of the lamps, the degree of bending, etc. A GPS, user input or factory setting may be provided to indicate the location of the vehicle to ensure compliance with various laws. Thus, identical lamp assemblies may be used in various countries with a simple selection of location.

The control methods described herein may be utilized with the lamp embodiments described herein or with other lamp types. Similarly, the lamp embodiments described herein may be controlled by a variety of methods, including those described herein, those described in other references incorporated herein or other methods. Finally, the lamp embodiments described herein may be used alone, in any number or configuration, or in conjunction with standard lamps, fixed bending lamps, fog lamps, foul weather lamps or other types of lamps. The control methods may control both the configurable lamps and any other type of lamp.

In one embodiment of the present invention, various external vehicle lights are used, such as high-intensity discharge (HID) headlamps, tungsten-halogen and blue-enhanced halogen headlamps, to provide greater ability to distinguish reflections from various roadside reflectors and signs from headlamps of on-coming vehicles and tail lamps of leading vehicles. Additionally, specific spectral filter material may be employed in combination with the external vehicle lights to produce desired results.

It is generally desirable for an automatic vehicle exterior light control system to distinguish headlamps of on-coming vehicles and tail lamps of leading vehicles from non-vehicular light sources or reflections off of signs and roadside reflectors. The ability to distinguish these various objects may be enhanced with optimal combination of various color, ultra-violet and infrared spectral filters. FIG.

10 depicts plots of the spectral content of different types of vehicular related light sources and FIG. 11 depicts plots of the spectral reflectance of various colored signs. FIG. 12 depicts plots of the percent transmission of red and infrared spectral filters used in one embodiment of the present invention and FIG. 13 depicts a plot of the quantum efficiency of an optical system in accordance with an embodiment of the present invention. Numerical data depicted by the plots of FIGS. 10–13 is utilized, as described in further detail below, to categorize various light sources.

The brightness of a given detected light source can be estimated by multiplying the spectral output of the source, as shown in FIG. 10, by the infrared spectral filter transmission factor, as shown in FIG. 12, multiplied by the spectral response of the pixel array, as shown in FIG. 13. For red filtered pixels, this value is further multiplied by the transmission factor of the red spectral filter. The brightness of detected reflections from road signs can be estimated by multiplying the controlled vehicle's headlamp spectral output, as shown in FIG. 10, by the spectral reflectance factor of the sign, as shown in FIG. 11, the infrared spectral filter transmission factor, as shown in FIG. 12, and the spectral response of the optical system, as shown in FIG. 13. For red spectral filtered pixels, the preceding result is then multiplied by the red spectral filter transmission factor, as shown in FIG. 12.

The ratio in brightness between the object projected onto the red filtered pixels in relation to the object projected onto the non-red filtered pixels can be used to determine the relative redness of an object. This ratio can then be utilized to determine if the object is a tail lamp or a headlamp. FIG. 14 depicts the computed ratios of the brightness of objects projected onto red filtered pixels relative to those same objects projected onto the non-filtered pixels. As is shown in FIG. 14, tail lamps have a much higher red-to-clear ratio than headlamps, or most other objects.

Discrimination between light sources can be further improved with the use of blue-enhanced headlamps. Such headlamp bulbs are commercially available and produce a bluer, or cooler, color light that more closely approximates natural daylight. These headlamp bulbs are sometimes used in combination with high-intensity discharge (HID), low-beam lights to more closely match the color. Finally, halogen-infrared (HIR) bulbs, which contain a coating to reflect infrared light back into the bulb, have a cooler light output and may be used. HIR bulbs have the advantage of emitting less red light as a percentage of their total output, as shown in FIG. 10. As a result, the image of signs reflecting light will have a lower brightness on red filtered pixels than on non-red filtered pixels. Other light sources, which emit less red light in proportion to the total amount of light, may be advantageously used to minimize the false detection of road signs and reflections off of other objects; HID high-beam lights and LED headlamps are examples of such sources.

It is common to classify the color of white light sources (such as headlamps) by their color temperature or correlated color temperature. Light sources with a high color temperature have a more bluish hue and are, misleadingly, typically called "cool-white light" sources. Light sources with a more yellow or orangish hue have a lower color temperature and are, also misleadingly, called "warm white light" sources. Higher color temperature light sources have a relatively higher proportion of short wavelength visible light to long wavelength visible light. The present invention can benefit from the use of higher color temperature headlamps due to the reduced proportion of red light that will be reflected by signs or other objects that could potentially be detected.

Correlated color temperature for non-perfect Planckian sources can be estimated by computing the color coordinates of the light source and finding the nearest temperature value on the Planckian locus. Calculation of color coordinates is well known in the art. The text entitled MEASURING COLOUR, second edition, by R. W. G. Hunt, incorporated in its entirety herein by reference, is one source for known teachings in the calculation of color coordinates. Using the CIE 1976 USC (u', v') color space, a standard halogen headlamp was measured to have color coordinates of u'=0.25 & v'=0.52. From these coordinates, a correlated color temperature of 3100 Kelvin is estimated. The blue-enhanced headlamp of FIG. 10 has color coordinates of u'=0.24 and v'=0.51 and, thus, a correlated color temperature of approximately 3700 Kelvin. A measured high-intensity discharge (HID) headlamp has color coordinates of u'=0.21 and v'=0.50 and, thus, a correlated color temperature of 4500 Kelvin. In general, the present invention can benefit when the controlled vehicle is equipped with headlamps having a correlated color temperature above about 3500 Kelvin.

FIG. 15A schematically illustrates a headlamp 1500, which includes a rotatable mask 1503 and a bulb 1502 that is positioned in front of a reflector 1501. The bulb 1502 may be of a conventional incandescent (e.g., tungsten-halogen) type, high-intensity discharge (HID) type or other suitable bulb type, or may be the output from a remote light source as is described above. A lens 1504 directs light from the bulb 1502 and reflected by the reflector 1501 down the road. The mask 1503 establishes a cutoff point to prevent light vertically above the horizon 1505 from being directed down the road. The mask 1503 absorbs or reflects light rays, such as light ray 1507, which may cause glare to another vehicle and allows an illumination pattern provided by the headlamp 1500 to be changed. Light rays, such as light ray 1506, which project below the cutoff point, pass through lens 1504 as they are not blocked by the mask 1503.

The mask 1503, may have a number of different shapes, such as the oval shown in FIG. 15B, and may be implemented as an irregular cylinder that is coupled to a motor M, e.g., a stepper-motor, off-center so as to achieve a variable illumination pattern as the mask 1503 is rotated, i.e., the mask 1503 changes how much light is blocked as it is rotated. In this manner, the mask 1503 can provide an oblong profile in the vertical direction, when the mask 1503 is implemented as an oval cylinder.

In a typical illumination system that implements the headlamp 1500, a control unit receives electrical signals from a sensor array and controls the rotated position of the mask 1503, by sending control signals to the motor M, to achieve a desired illumination pattern. It should be appreciated that a homing or feedback technique may be employed to assure that the mask 1503 is in a known position and, thus, able to provide a desired illumination pattern. As the mask 1503 is rotated the amount of light that is attenuated by the mask 1503 changes and in this manner the movement of the mask 1503 can be used to establish a wide variety of different lighting functions. Since the rotation of the mask 1503 can be used to establish a vertical aim of the headlamp 1500, vehicle pitch variation compensation, as described herein above, can also be achieved. This technique of aiming a headlamp is advantageous as only the relatively small mask 1503 requires movement, rather than the entire lamp set which is moved in some commercially available auto-leveling systems.

FIG. 16A schematically illustrates a headlamp 1600, which includes a rotatable mask 1603 that includes a plurality of profiles, according to another embodiment of the

present invention. These profiles allow an illumination pattern to be controlled in both horizontal and vertical directions. The headlamp **1600** includes a bulb **1602** that is placed in front of a reflector **1601**. The bulb **1602** may be of a conventional incandescent (e.g., tungsten-halogen) type, high-intensity discharge (HID) type or other suitable bulb type, or may be the output from a remote light source as is described above. A lens **1604** directs light from the bulb **1602** and reflected by the reflector **1601** down the road. The mask **1603** establishes a cutoff point to prevent light above the horizon **1605** from being directed down the road. The mask **1603** absorbs or reflects light rays, such as light ray **1607**, which would cause glare to another vehicle. Light rays, such as light ray **1606**, which project below the cutoff point, pass through the lens **1604** as they are not blocked by the mask **1603**.

The mask **1603** may simultaneously have a number of different incorporated profiles, such as the profiles shown in FIGS. **16**B and **16**C, and is coupled to a motor M, e.g. a stepper-motor, at an end so as to achieve a variable illumination pattern as the mask **1603** is rotated to select a desired profile. For example, by providing different horizontal profiles one can effect where light is aimed, e.g., left or right, and/or change the width of a light beam. Similar to the headlamp **1500**, the headlamp **1600** may function with a control unit that receives electrical signals from a sensor array and controls the rotated position of the mask **1603**, by sending control signals to the motor M, to achieve a desired illumination pattern. It should be appreciated that a homing or feedback technique may also be employed to assure that the mask **1603** is in a known position and, thus, able to provide a desired illumination pattern.

As with the rotation of the mask **1503**, the rotation of the mask **1603** can also be used to establish different lighting functions, such as town or motorway lighting, or to increase the illumination range gradually with increased speed. Additionally, the rotation of the mask **1603** can also be used to establish both vertical and horizontal aim of the headlamp and therefore also compensate for vehicle pitch variations, as described herein above. This method of aiming the headlamp is also advantageous due to the fact that only the relatively small mask **1603** requires rotation.

The above description is considered that of the preferred embodiments only. Modification of the invention will occur to those skilled in the art and to those who make or use the invention. Therefore, it is understood that the embodiments shown in the drawings and described above are merely for illustrative purposes and not intended to limit the scope of the invention, which is defined by the following claims as interpreted according to the principles of patent law, including the Doctrine of Equivalents.

What is claimed is:

1. A system for controlling at least one exterior vehicle light of a controlled vehicle, the system comprising:

an array of sensors capable of detecting light levels in front of the controlled vehicle; and

a control unit in communication with the array of sensors and the at least one exterior vehicle light, the control unit determining an estimated distance and an angle from the at least one exterior vehicle light of the controlled vehicle to a leading vehicle, wherein the control unit is operable to control operation of the at least one exterior vehicle light as a function of the estimated distance and angle based on output from the array of sensors and prevent the at least one exterior vehicle light from providing a disruptive glare to a driver of the leading vehicle.

2. The system of claim **1**, wherein the at least one exterior vehicle light includes two low-beam headlamps.

3. The system of claim **1**, wherein the control unit prevents the disruptive glare by causing the at least one exterior vehicle light to be one of aimed downward and reduced in intensity.

4. The system of claim **1**, wherein the control unit determines the estimated distance to a leading vehicle by determining one of the brightness of a tail lamp of the leading vehicle, determining the estimated distance between two tail lamps of the leading vehicle and utilizing an output signal provided by one of a radar, laser and ultrasonic sensor.

5. The system of claim **1**, wherein the array of sensors is a two-dimensional array of sensors that is incorporated within a camera.

6. An illumination control system for controlling at least one exterior vehicle light of a controlled vehicle, the system comprising:

an array of sensors for generating electrical signals; and

a control unit in communication with the at least one exterior vehicle light and operable to acquire and process electrical signals received from the array of sensors to determine an illumination gradient associated with the at least one exterior vehicle light on a road surface, the control unit comparing a sensed illumination range, which is based on the illumination gradient, to a desired illumination range and being operable to control the at least one exterior vehicle light to achieve the desired illumination range.

7. The system of claim **6**, wherein the at least one exterior vehicle light includes two low-beam headlamps.

8. The system of claim **6**, wherein the control unit achieves the desired illumination range and prevents disruptive glare by controlling at least one of an aim and intensity of the at least one exterior vehicle light.

9. The system of claim **6**, wherein the control unit determines a distance to a leading vehicle by at least one of determining the brightness of a tail lamp of the leading vehicle, determining the distance between two tail lamps of the leading vehicle and utilizing an output signal provided by one of a radar, laser and ultrasonic sensor.

10. The system of claim **6**, wherein the array of sensors is a two-dimensional array of sensors.

11. The system of claim **6**, wherein the desired illumination range is based on at least one of a constant, a controlled vehicle speed, an ambient light level, weather conditions, a presence of another vehicle, an absence of another vehicle and a type of roadway.

12. An illumination control system for controlling at least one exterior vehicle light of a controlled vehicle, the system comprising:

a light sensor for generating electrical signals; and

a control unit in communication with the at least one exterior vehicle light and operable to acquire and process electrical signals received from the light sensor to determine when the at least one exterior vehicle light should transition to a town lighting mode, wherein the light sensor provides an indication of an AC component present in ambient light, and wherein the control unit causes the at least one exterior vehicle light to transition to the town lighting mode when the AC component exceeds a predetermined AC component threshold.

13. The system of claim **12**, wherein the at least one exterior vehicle light includes two low-beam headlamps.

14. The system of claim **12**, further including:

a vehicle speed sensor coupled to the control unit and providing an indication of a speed of the controlled

vehicle, wherein the control unit only causes the at least one exterior vehicle light to transition to the town lighting mode when the speed of the controlled vehicle is below a controlled vehicle speed threshold.

15. An illumination control system for controlling at least one exterior vehicle light of a controlled vehicle, the system comprising:

an imaging system for obtaining an image to a front of the controlled vehicle, the imaging system including an array of sensors each generating electrical signals representing a light level sensed by the sensor; and

a control unit in communication with the at least one exterior vehicle light and operable to acquire electrical signals received from the array of sensors and to separately process the electrical signals, wherein the control unit is operable to examine a position and brightness of an on-coming vehicle headlamp over time, as indicated by the electrical signals provided by the array of sensors to determine when a median width is appropriate for the activation of a motorway lighting mode, and wherein the control unit causes the at least one vehicle light to transition to the motorway lighting mode responsive to the determined median width.

16. The system of claim **15**, wherein the at least one exterior vehicle light includes two low-beam headlamps.

17. An illumination control system for controlling at least one exterior vehicle light of a controlled vehicle, the system comprising:

an imaging system for obtaining an image to a front of the controlled vehicle, the imaging system including an array of sensors each generating electrical signals representing a light level sensed by the sensor;

a spatially controlled variable attenuating filter positioned proximate the at least one exterior vehicle light; and

a control unit in communication with the at least one exterior vehicle light and the attenuating filter, wherein the control unit is operable to acquire electrical signals received from the array of sensors and to process the electrical signals and control the attenuating filter to vary an illumination range of the at least one exterior vehicle light in response to the electrical signals, and wherein the control unit is operable to control the attenuating filter to distinguish between vehicular and non-vehicular light sources.

18. The system of claim **17**, wherein the attenuating filter is one of a liquid crystal device and an electrochromic device.

19. The system of claim **17**, wherein the attenuating filter is controlled to vary the direction of the at least one exterior vehicle light in response to the electrical signals.

20. The system of claim **17**, wherein the array of sensors is incorporated within a camera.

21. An illumination control system for controlling at least one exterior vehicle light of a controlled vehicle, the system comprising:

an imaging system for obtaining an image to a front of the controlled vehicle, the imaging system including an array of sensors each generating electrical signals representing a light level sensed by the sensor;

a spatially controlled reflector positioned proximate the at least one exterior vehicle light; and

a control unit in communication with the at least one exterior vehicle light and the reflector, wherein the control unit is operable to acquire electrical signals received from the array of sensors and to process the electrical signals and control the reflector to vary an illumination range of the at least one exterior vehicle light in response to the electrical signals, and wherein the control unit is operable to control the reflector to distinguish between vehicular and non-vehicular light sources.

22. The system of claim **21**, wherein the reflector is a metal-hydride switchable mirror.

23. The system of claim **21**, wherein the reflector is a digital micro-mirror device.

24. The system of claim **21**, wherein the reflector is also controlled to vary the direction of the at least one exterior vehicle light in response to the electrical signals.

25. The system of claim **21**, wherein the array of sensors is incorporated within a camera.

26. The system of claim **21**, wherein the at least one exterior vehicle light is a headlamp and the reflector is incorporated within the headlamp.

27. A system for controlling at least one headlamp of a controlled vehicle, the system comprising:

an array of sensors capable of detecting light levels in front of the controlled vehicle; and

a control unit in communication with the array of sensors and the at least one headlamp, the headlamp having a high color temperature and the control unit receiving data representing the light levels detected by the array of sensors to identify potential light sources, the control unit distinguishing light that is emitted from the headlamp and reflected by an object from other potential light sources, wherein the control unit is operable to control operation of the at least one headlamp as a function of the light levels output from the array of sensors.

28. The system of claim **27**, wherein the color temperature is greater than 3500 Kelvin.

29. The system of claim **27**, wherein the color temperature is 3700 Kelvin.

30. The system of claim **27**, wherein the color temperature is greater than 4500 Kelvin.

31. The system of claim **27**, wherein the at least one headlamp is a high-intensity discharge headlamp.

32. The system of claim **27**, wherein the at least one headlamp is at least one light emitting diode.

33. The system of claim **27**, wherein the at least one headlamp is a halogen-infrared headlamp.

34. The system of claim **27**, wherein the at least one headlamp is a halogen headlamp.

35. The system of claim **27**, wherein the at least one headlamp is a blue-enhanced halogen headlamp.

36. The system of claim **1**, wherein the at least one exterior light includes at least one headlamp, and wherein the at least one headlamp provides the illumination at more than two distinct beam patterns.

37. The system of claim **36**, wherein the array of sensors is a two-dimensional array of sensors that is incorporated within a camera.

38. A control system for controlling at least one exterior vehicle light of a controlled vehicle, the system comprising:

a processor; and

a memory subsystem for storing processor executable code coupled to the processor, the processor executable code when executed causing the processor to perform the steps of:

determining a distance and an angle from the at least one exterior vehicle light of the controlled vehicle to a leading vehicle based on output from an array of sensors; and

controlling the operation of the at least one exterior vehicle light as a function of the distance and angle

to prevent the at least one exterior vehicle light from providing a disruptive glare to a driver of the leading vehicle.

39. The system of claim **38**, wherein the processor prevents the disruptive glare by causing the at least one exterior vehicle light to be one of aimed downward and reduced in intensity.

40. The system of claim **38**, wherein the processor determines the distance to a leading vehicle by determining one of the brightness of a tail lamp of the leading vehicle, determining the distance between two tail lamps of the leading vehicle and utilizing an output signal provided by one of a radar, laser and ultrasonic sensor.

41. A control system for controlling at least one exterior vehicle light of a controlled vehicle, the system comprising:

a processor; and

a memory subsystem for storing processor executable code coupled to the processor, the processor executable code when executed causing the processor to perform the steps of:

determining an illumination gradient associated with the at least one exterior vehicle light on a road surface based on output from an array of sensors;

comparing a sensed illumination range, which is based on the illumination gradient, to a desired illumination range; and

controlling the at least one exterior vehicle light to achieve the desired illumination range.

42. The system of claim **41**, wherein the processor achieves the desired illumination range and prevents disruptive glare by controlling at least one of an aim and intensity of the at least one exterior vehicle light.

43. The system of claim **41**, wherein the processor determines a distance to a leading vehicle by at least one of determining the brightness of a tail lamp of the leading vehicle, determining the distance between two tail lamps of the leading vehicle and utilizing an output signal provided by one of a radar, laser and ultrasonic sensor.

44. The system of claim **41**, wherein the desired illumination range is based on at least one of a constant, a controlled vehicle speed, an ambient light level, weather conditions, a presence of another vehicle, an absence of another vehicle and a type of roadway.

45. A control system for controlling at least one exterior vehicle light of a controlled vehicle, the system comprising:

a processor; and

a memory subsystem for storing processor executable code coupled to the processor, the processor executable code when executed causing the processor to perform the steps of:

examining a position and brightness of an on-coming vehicle headlamp over time, as indicated by electrical signals provided by an array of sensors, to determine when a median width is appropriate for the activation of a motorway lighting; and

causing the at least one vehicle light to transition to the motorway lighting mode responsive to the determined median width.

46. A control system for controlling at least one exterior vehicle light of a controlled vehicle, the system comprising:

a processor; and

a memory subsystem for storing processor executable code coupled to the processor, the processor executable code when executed causing the processor to perform the steps of:

receiving electrical signals from an array of sensors;

controlling a spatial light modulator (SLM) to vary an illumination pattern of the at least one exterior vehicle light in response to the received electrical signals; and

controlling the SLM to distinguish between vehicular and non-vehicular light sources.

47. The system of claim **47**, wherein the SLM is also controlled to provide redirected light to a portion of the SLM that is contributing to the illumination pattern provided by the at least one exterior light.

48. A method for controlling the forward lighting of a motor vehicle, comprising the steps of:

receiving a vehicular input that includes at least one of a vehicle turn rate, a vehicle wheel angle, a vehicle compass direction, a vehicle pitch, a vehicle location, and a weather condition;

determining a desired beam pattern based upon the vehicular input;

receiving an image of a forward field of view of the motor vehicle from an image sensor;

analyzing the received image; and

modifying the desired beam pattern based upon the analyzed image, wherein more than two distinct beam patterns can be provided.

49. The method of claim **48**, wherein the analyzing step includes detecting oncoming or preceding vehicle light sources.

50. The method of claim **48**, wherein the beam pattern is modified to prevent glare to detected oncoming or preceding vehicles.

51. The method of claim **48**, wherein the analyzing step includes determining a light gradient on a road.

52. The method of claim **48**, wherein the beam pattern is modified to achieve the desired illumination range based upon the light gradient on the road.

53. The system of claim **1**, wherein the angle determined by said control circuit includes a vertical component.

54. The system of claim **1**, wherein the at least one exterior vehicle light includes two low-beam headlamps, and wherein said control unit prevents disruptive glare by causing the low-beam headlamps to be aimed downward.

55. The system of claim **1**, wherein the at least one exterior vehicle light includes two low-beam headlamps, and wherein said control unit prevents disruptive glare by causing the low-beam headlamps to be reduced in intensity.

56. The system of claim **12**, wherein the control unit is operable to examine a position and brightness of an on-coming vehicle headlamp over time, as indicated by the electrical signals provided by the light sensor to determine when a median width is appropriate for the activation of a motorway lighting mode, and wherein the control unit causes the at least one vehicle light to transition to the motorway lighting mode responsive to the determined median width.

57. The system of claim **12**, wherein the light sensor is a discrete light sensor.

58. The system of claim **15**, wherein the control unit determines when the at least one exterior vehicle light should transition to a town lighting mode, wherein the array of sensors provides an indication of an AC component present in ambient light, and wherein the control unit causes the at least one exterior vehicle light to transition to the town lighting mode when the AC component exceeds a predetermined AC component threshold.

59. The system of claim **27** and further comprising a red filter for filtering the light incident on at least a portion of said array of sensors.

* * * * *

UNITED STATES PATENT AND TRADEMARK OFFICE

CERTIFICATE OF CORRECTION

PATENT NO. : 6,861,809 B2
DATED : March 1, 2005
INVENTOR(S) : Joseph S. Stam

It is certified that error appears in the above-identified patent and that said Letters Patent is hereby corrected as shown below:

Column 24,
Line 3, "claim 47" should be -- claim 46 --.

Signed and Sealed this

Thirty-first Day of May, 2005

JON W. DUDAS
Director of the United States Patent and Trademark Office

Exhibit OTH-A
Stam Declaration

IN THE UNITED STATES PATENT AND TRADEMARK OFFICE

In re application of:

Yechezkal Evan Spero

Patent No.: 9,955,551

Filed: January 24, 2012

For: DETECTOR CONTROLLED ILLUMINATING SYSTEM

Attorney Docket No.: TRCH0102RX

Group Art Unit: N/A

Examiner: N/A

Request for Reexamination Under U.S.C. §§302-307 and 37 C.F.R. §1.510

DECLARATION OF JOSEPH S. STAM REGARDING U.S. PATENT NO. 9,955,551

Mail Stop *Ex Parte* Reexamination
Attn: Central Reexamination Unit
Commissioner for Patents
P.O. Box 1450
Alexandria, VA 22313-1450

Table of Contents

EXHIBIT LIST ii

OTHER EXHIBITS AND SUPPORTING DOCUMENTS iii

I. INTRODUCTION 1

II. RESOURCES CONSULTED 1

III. BACKGROUND, QUALIFICATIONS AND COMPENSATION 1

IV. LEVEL OF ORDINARY SKILL IN THE ART 3

V. RELEVANT LEGAL STANDARD 4

VI. CLAIM CONSTRUCTION 5

VII. BACKGROUND OF AUTOMOTIVE LIGHTING INDUSTRY 10

VIII. SUMMARY OF THE '551 PATENT 13

IX. THE ASSERTED REFERENCES 19

- A. STAM PCT 19
- B. HARBERS 26

X. CLAIM 6 AND NEW CLAIMS 24-87 ARE PATENTABLE OVER THE COMBINATION OF STAM PCT AND HARBERS 27

- A. THE STAM PCT AND HARBERS COMBINATION FAILS TO TEACH NUMEROUS LIMITATATIONS 27
- B. NO MOTIVATION TO COMBINE 35
- C. TEACHING AWAY 36
- D. CONTEMPORANEOUS FILINGS ESTABLISH POSITA MINDSET 37

XI. OBJECTIVE EVIDENCE OF NONOBVIOUSNESS 38

- A. INDUSTRY PRAISE FOR THE GLARE-FREE ADAPTIVE DRIVING BEAM TECHNOLOGY OF THE REEXAMINATION CLAIMS 38
- B. LONG FELT BUT UNMET NEED 47

XII. CONCLUSION 55

EXHIBIT LIST

Exhibit No.	Description
PAT-A	U.S. Patent No. 9,955,551 Spero
PA-A	International Publication No. WO 01/70538 Stam PCT
PA-B	U.S. Patent No. 6,406,172 Harbers et al.
PA-C	U.S. Patent No. 6,281,632 Stam et al.
PA-D	U.S. Patent No. 6,587,573 Stam et al.
PA-E	U.S. Patent No. 6,861,809 Stam et al.
SB08	U.S. Patent and Trademark Office form SB08
OTH-A	Stam Declaration
OTH-B	Stam C.V.
OTH-C	New Claims
OTH-D	Support for proposed amendments
OTH-E	Industry praise nexus support document
OTH-F	Side by side comparison
OTH-G	European Patent No. EP1391347 B1 Krukenbaum et al.
OTH-H	U.S. Patent No. 6,752,523 Takahashi

OTHER EXHIBITS AND SUPPORTING DOCUMENTS

Exhibit No.	Description
Exhibit 1	Vijayenthiran, Vinesh, "A look at the new LED headlights on the Lexus LS600H," May 14, 2007 https://www.motorauthority.com/news/1027394_a-look-at-the-new-led-headlights-on-the-lexus-ls600h, permalink https://perma.cc/Y8XS-GAA8
Exhibit 2	WayBack Machine – Internet Archive, "LED headlights – Audi Technology Portal", November 16, 2014 https://web.archive.org/web/20141116034803/https://www.audi-technology-portal.de/en/electrics-electronics/lighting-technology/led-headlights, permalink https://perma.cc/7W6N-D6T9
Exhibit 3	Tamburo, R. et al. (2014) "Programmable Automotive Headlights" http://www.cs.cmu.edu/~ILIM/publications/PDFs/, permalink https://perma.cc/4SXQ-KXVA
Exhibit 4	NHTSA Proposed Rule 2018 Published in Federal Register, Vol. 83, No. 198, Friday October 12, 2018, permalink https://perma.cc/57ZR-WSX2
Exhibit 5	WayBack Machine – Internet Archive, "Koito Company History" https://www.koito.co.jp/english/corp/history/chronology.html First archive captured via WayBack Machine October 24, 2020 at 5:20 and 18 seconds https://web.archive.org/web/20201024172018/https://www.koito.co.jp/english/corp/history/chronology.html, permalink https://perma.cc/8HAW-S2SH
Exhibit 6	WayBack Machine – Internet Archive, "HELLA Company History" First archive captured via WayBack Machine March 25, 2016 at 03:25 and 44 seconds https://web.archive.org/web/20160325044139/https://www.hella.com/hella-com/en/History-739.html, permalink https://perma.cc/8YR7-WF6H
Exhibit 7	Teague, Chris. "Here's How Smart Headlights Work", April 14, 2021, https://www.autoweek.com/news/technology/a36031601/heres-how-smart-headlights-work/, permalink https://perma.cc/QQ2G-F3BH
Exhibit 8	Wayback Machine – Internet Archive, "AAA Research Report European Specifications vs US Headlamps," April 2019

Exhibit No.	Description
	First archive captured via WayBack Machine April 12, 2021 at 5:07 and 23 seconds https://web.archive.org/web/20210412050723/https://newsroom.aaa.com/wp-content/uploads/2019/06/ResearchReportEuroSpecvsUSHeadlamps.pdf and https://newsroom.aaa.com/wp-content/uploads/2019/06/ResearchReportEuroSpecvsUSHeadlamps.pdf, permalink https://perma.cc/ULR2-HZ98
Exhibit 9	WayBack Machine – Internet Archive, "Two Interesting New Lighting Systems from BMW", Driving Vision News, December 3, 2019 First archive captured via WayBack Machine July 13, 2021 at 12:42 and 04 seconds https://web.archive.org/web/20210713144204/https://www.drivingvisionnews.com/news/2019/12/03/two-interesting-new-lighting-systems-from-bmw/ and https://www.drivingvisionnews.com/news/2019/12/03/two-interesting-new-lighting-systems-from-bmw/, permalink https://perma.cc/PVR3-3PKD
Exhibit 10	WayBack Machine – Internet Archive, "HELLA's LED Matrix Lighting Wins Automotive News PACE Award" PR Newswire April 8, 2014 First archive captured via WayBack Machine April 11, 2014 at 11:19 and 57 seconds https://web.archive.org/web/20140411221957/https://www.prnewswire.com/news-releases/hellas-led-matrix-lighting-wins-automotive-news-pace-award-254371771.html and https://www.prnewswire.com/news-releases/hellas-led-matrix-lighting-wins-automotive-news-pace-award-254371771.html, permalink https://perma.cc/79QJ-EZZU
Exhibit 11	Alliance for Automotive Innovation submission August 5, 2020 Retrieved from https://www.regulations.gov/comment/NHTSA-2018-0090-0219, permalink https://perma.cc/8HX8-DZPA

DECLARATION OF JOSEPH S. STAM

I, Joseph S. Stam., hereby declare, affirm and state the following:

I. INTRODUCTION

1. I have been retained for this Reexamination proceeding. I understand that this Declaration is being submitted along with a Reexamination Request of U.S. Patent No. 9,955,551 ("the '551 Patent"). I opine only with respect to certain issues that are discussed in this declaration.

II. RESOURCES CONSULTED

2. I have reviewed the '551 Patent, including claim 6 filed with the U.S. Patent and Trademark Office ("Office") and new claims 24-87 filed in conjunction with this Reexamination Request. I have also reviewed the following references: WO01/70538 ("Stam PCT"), U.S. Patent No. 6,406,172 ("Harbers"), U.S. Patent No. 6,587,573 ("Stam '573"), U.S. Patent No. 6,281,632 ("Stam '632") and U.S. Patent No. 6,861,809 ("Stam '809").

III. BACKGROUND, QUALIFICATIONS AND COMPENSATION

3. I received a bachelor's degree in 1996 from Hope College in engineering physics and computer science, and an M.S. degree from Michigan State University in electrical engineering with an emphasis in solid state electronic devices with elective coursework in optics and image processing. My *curriculum vitae* is attached to this report as Exhibit OTH-B.

4. I was lead engineer for imaging products at Gentex Corporation, a Tier 1 automotive supplier of rear-view mirrors and camera-based driver assistance systems, between 1996 and 2007. During my time at Gentex I worked on all facets of Gentex's product line, with a specific focus on improving image detection systems for automatic high beam applications.

5. During that time period, I was an inventor on 46 patent applications, most of which

related to the intersection of improving image detection systems and the related control systems to provide more robust forward lighting. I was actively involved in intellectual property issues including patent prosecution, licensing and overall intellectual property strategy and am an inventor on nearly 100 U.S. patents and numerous foreign patents.

6. At Gentex, I was instrumental in creating a complete microelectronics production competency for wafer-level sensor testing through image sensor package assembly. I designed camera optics and optical assembly methods and developed proprietary pattern recognition algorithms, obtaining extensive experience with neural networks and statistical pattern recognition techniques.

7. Also, while at Gentex Corporation, I was lead designer of electronics hardware and software algorithms. I managed the design of several generations of high sensitivity and high dynamic range custom DMOS image sensors. I was chief engineer for research, development and production for Gentex's SmartBeam™ automatic high beam headlamp control product. The SmartBeam™ headlamp control product is a miniature machine vision system, which uses a CMOS camera and proprietary algorithms to detect and respond to traffic. This product has sold millions of units to date and was awarded *Popular Science* 2005's Best of What's New award as well as an *Automotive News PACE* award.

8. Between 2007 and 2012, after my employment at Gentex, I was principal vision architect at NVIDIA, a computer systems design services company. In that capacity, my principal responsibilities involved hardware architectures and software efforts related to computer vision and machine learning. More specifically, I led NVIDIA's early investigation into computer vision and machine learning and managed the team responsible for computer vision for smartphones and other mobile devices. Other responsibilities included leading image and video processing efforts

for professional digital cinema and photography markets and initial developments in automotive computer vision and other applications.

9. Since 2012, I have been employed as a senior software engineer at Jump Trading, LLC, a proprietary trading firm with a focus on low latency algorithmic and high-frequency trading strategies. More specifically, my responsibilities include software optimization for high speed trading, computational data analytics, analysis of financial market data and feeds, trading infrastructure design, and vendor relationship building.

10. For my work on this reexamination matter, I am being compensated at a rate of $400/hour.

IV. LEVEL OF ORDINARY SKILL IN THE ART

11. I have been informed by counsel that a person of ordinary skill in the art (POSITA) for the invention claimed in the '551 Patent, would have had a Master's of Science Degree (or a similar technical Master's Degree, or higher degree) in an academic area emphasizing electrical engineering, computer engineering, or computer science with experience or education in optics and imaging systems or, alternatively, a Bachelor's Degree (or higher degree) in an academic area emphasizing electrical, computer engineering or computer science and having two or more years of experience in the field of optical and imaging systems.

12. I agree with the above statement regarding the appropriate level of ordinary skill in the art for the '551 Patent. My opinion is based on my review of the patent, as well as my knowledge of the level of skill of individuals in this field. In forming my opinions, I have also considered the nature of problems that the '551 Patent was intended to solve, and the education level of active professionals in the field.

V. RELEVANT LEGAL STANDARD

13. I am not a lawyer and do not purport to offer legal opinions. In forming my opinions, however, I have been asked to apply certain standards regarding patentability that have been provided to me by counsel.

14. I understand that for purposes of this reexamination the terms in the claims of the '551 patent and the new claims as presented in this reexamination are to be given their broadest reasonable interpretation in light of the specification of the '551 Patent, as understood by one of ordinary skill in the art as of the earliest priority date of the '551 Patent.

15. It is my understanding that a claim is obvious if a reference alone or in combination with one or more prior art references discloses, expressly or inherently, every claim limitation so as to render the claim, as a whole, obvious. In determining whether or not a patented invention would have been obvious, the following factors should be considered: (a) the scope and content of the prior art; (b) the differences between the prior art and the claims at issue; (c) the level of ordinary skill in the art; and (d) any "secondary considerations" that may be present.

16. I understand that a patent claim composed of several elements is not proved obvious merely by demonstrating that each of its elements was independently known in the prior art; however multiple prior art references or elements may, in some circumstances, be combined to render a patent claim obvious. I understand that I should consider whether there is an "apparent reason" to combine the prior art references or elements in the way the patent claims to protect against the distortion caused by hindsight. Along the same lines, I understand that the '551 Patent cannot be used as a blueprint to piece together the prior art in order to combine the right references in the right way to create the claimed invention. To determine whether such an "apparent reason" exists to combine the prior art references or elements in the way a patent claims, I understand that

it is often necessary to look to the interrelated teachings of multiple patents, to the effects of demands known to the design community or present in the marketplace, and to the background knowledge possessed by a person having ordinary skill in the art. In sum, I understand that obviousness requires the additional showing that a POSITA at the time of the invention would have selected and combined those prior art elements in the normal course of research and development to yield the claimed invention.

17. I also understand that when the prior art "teaches away" from combining prior art references or certain known elements, discovery of a successful means of combining them is less likely to be obvious. A prior art reference may be said to "teach away" from a patent when a POSITA, upon reading the reference, would be discouraged from following the path set out in the patent or would be led in a direction divergent from the path that was taken by the patent. Additionally, a prior art reference may "teach away" from a claimed invention when substituting an element within that prior art reference for a claim element would render the claimed invention inoperable.

18. I further understand that if a proposed modification or combination of prior art references would change the principle of operation of the prior art being modified, then the teachings of the references are not sufficient to render the claims obvious.

VI. CLAIM CONSTRUCTION

19. I understand that during a reexamination, the Patent and Trademark Office determines the scope of claims in patent applications by giving claims their broadest reasonable interpretation in light of the specification as it would be understood by one of ordinary skill in the art. I further understand that the broadest reasonable interpretation does not mean the broadest possible interpretation. Rather, the meaning given to a claim term must be consistent with the

usage of the term in the claims, the specification and drawings. Further, the broadest reasonable interpretation must be consistent with the interpretation that those skilled in the art would reach.

20. Consistent with the disclosure in the '551 Patent and usage of the term in the claims, a person of ordinary skill in the art would construe the term *light source* to mean "individual LED".[1] As the Detailed Description of the '551 Patent makes clear,

> **[t]he system is built around a 'digital' light source**. That is, the emanating lighting effect is **the sum of the characteristics of a multiplicity of discretely controllable 'digit' sources**. <u>The difference between the **individual 'digit' light sources** and their summation manifests itself in the resultant light characteristic</u>, be in its intensity, spatial intensity distribution, spectral energy content and spectral intensity distribution … Therefore, the illuminating device may be described as a **'digital' light source** or as a Multiple Solid-state Lighting Source (MSLS), comprising many 'digits', SLSs, and <u>essentially replaces the lamp of present-day luminaries</u>.

(Ex. PAT-A, '551 Patent at 16:39-17:2, emphasis added.)

The disclosure in the '551 Patent repeatedly and consistently describes the '551 invention as comprising a "digital" light source that provides "digital control," the "<u>invention comprises</u> a novel multi-light source approach to the design and construction **of solid-state lighting fixtures (vs. solid-state lamps), which is termed a "Digital Lighting Fixture," due to the control of <u>individual lighting element "digits"</u>"** to provide the "correct" lighting solution for the situation at hand." (Ex. PAT-A, '551 Patent at 11:8-13, emphasis added.) A person of ordinary skill in the art understands that a solid-state light source (SLS) uses light-emitting diodes as a light source, rather than electrical filaments, plasma or gas.

[1] For ease of reference, all claim language will be italicized.

21. The '551 Patent goes on to explain how the "digital aspect" of the illuminating device gives rise to the desired "digital" "control capability":

> The multiple light sources of specific characteristics provide quanta of power and spectrum which are smoothly added or detracted to generate a changed lighting effect. The digital aspect arises from the sufficient progression of values, varying by minutes to produce a continuum so as to be non-discernable or irrelevant to the user. The **added controllability is realized by breaking up the light-production, into discrete, specifically aimable, and dimmable elements which can be addressed by control electronics** for the purpose of affecting the intensity, spectrum and spatial distribution of spectrum and of intensity of the illumination provided by the luminaire of the present invention.
>
> The overall combination of control capability and discrete light sources yields a digital lighting fixture. The terminology "digital" as used herein refers to the discrete nature of the multiple LED lamps provided in the luminaire, whereby **"digital" control results from the individual control of the discrete, i.e. 'digital' lighting elements, the LEDs, in the luminaire**."

(Ex. PAT-A, '551 Patent at 2:51-3:3, emphasis added.)

22. The specification of the '551 Patent further states:

> **[t]he advance over prior art is a solid-state light source** with increased: 1. Efficiency—more effective lumen per watt electricity. 2. Durability—physical strength, life expectancy, lumen maintenance and spectral stability. 3. Lighting quality—as related to visual comfort and "atmosphere". 4. Functionality—**ability to control the light placement, intensity and color temperature and do so as needed.** 5. Energy savings 6. Lower overall lifecycle cost.

(*Id.* at 11:66-12:6, emphasis added.)

In reference to the control functionality, the specification of the '551 Patent states:

> **Integrating the light source with power conditioning electronics, control**

> **circuitry and sensors gives additional cost benefits and functionality including**: 1. Mass production capability 2. Sealed-for-life fixture 3. Exact optical performance less spill light 4. Compact design 5. Feedback control and recalibrated color consistency over the device lifetime 6. Real-time lighting needs adaptability.
>
> . . .
>
> In summary, as opposed to **LED industry trends of going with a single large source, the present invention provides multiple smaller sized sources** of differing characteristics such that their combined effect is greater than that which could have been offered by sum of the individual parts operating separately. The added **controllability offered by breaking the total light output up into discrete ("digital") specifically aimable and dimmable elements which can be addressed by control electronics to effect intensity, spectrum and spatial distribution of intensity and spectrum, yields a lighting fixture (vs. lamp) of unparalleled performance.**
>
> . . .
>
> **Unique to this patent is the approach**. It is the approach of a lighting manufacturer who provides lighting solutions versus that of a lamp manufacturer who produces a generic lamp
>
> . . .
>
> The process includes **determining: the correct lighting practice for the application; the surroundings; the selection and placement of light sources** and their integration with the mechanical support and; electronic control elements to realize the objective.

(*Id.* at 12:7-13, 24:37-47, 11:62-65, 13:63-65 emphasis added.)

Relatedly, the specification of the '551 Patent ties the control functionality to the ability to "adjust power to SLS":

> In a preferred embodiment the DLF contains **logic control electronics unit 7. Logic control electronics unit, 7, receives input and/or feedback from motion, intensity and/or spectral sensors 8, or from manual control button 9 and**

> **increases or decreases or turns on or shuts off the power to one or more of the SLS to effect the desired change**. That is, the control logic unit 7 has stored parameters for intensity and spectral distribution and operates the MSLS lamp within the predefined range. The control unit may include a DSP or computer with storage media, computer algorithms, signal input and output electronics, analog to digital converters, and communications elements to carry out intensity, distribution, dimming and color balance control. Computer algorithms and instruction sets 7A are induced by the logical controller to manipulate data, calculate results generate output signals and maintain the operating parameters within the specifications. **Measured parameters are checked against the stored parameters and the control circuitry adjusts the power to SLS.**

(*Id. at* 25:34-52, emphasis added.)

23. Finally, the Field of the Invention expressly **excludes traditional lighting sources**: "[t]he invention relates to multiple light source illuminating devices **intended to replace** incandescent, fluorescent and HID luminaires in general and specialty lighting applications."[2] (Ex. PAT-A, '551 Patent at 1:33-36, emphasis added.)

24. Notably, the laundry list of potential light sources listed at 16:47-51, is not applicable to the claimed *light source*, when read in the context of the overall specification and the usage of the term *light source* in the claims. By way of example, it wouldn't make sense to construe the term *light source* to include incandescent, fluorescent and HID light sources, as claim 1 would then be directed to *an illuminating device* with a "multiplicity of independently controllable" incandescent, fluorescent or HID light sources.

---

[2] A person of ordinary skill in the art understands that HID is the abbreviation for high-intensity discharge (HID) lamps, which are a type of electrical gas-discharge lamp which produces light by means of an electric arc between tungsten electrodes housed inside a translucent or transparent fused quartz or fused alumina arc tube.

25. Accordingly, in view of the specification of the '551 Patent and the claim language, a person of ordinary skill in the art (POSITA) would construe the claim term *light source* to mean an individual LED.

VII. BACKGROUND OF AUTOMOTIVE LIGHTING INDUSTRY

26. As of 2001, researchers were developing technologies for continuously variable headlamps, able to change the intensity of light and/or the direction of light emitted by the headlamps. (Ex. PA-C, Stam '632 at 1:21-24.)

27. Per the '632 patent filed in April, 2000, the intensity of headlamp illumination could be "accomplished in several different" ways by: 1) providing "a pulse width modulated (PWM) signal to the headlamp and "varying the duty cycle of the headlamp power", 2) providing a "PWM signal to a lamp driver integrated circuit", 3) through high intensity discharge (HID) headlamps—" a new, highly efficient headlamp technology"—wherein "ballasts used to power HID lamps can be directly supplied with a control signal to vary headlamp illumination intensity"; and 4) providing "an attenuating filter to absorb some of the light emitted from the headlamp." (*Id.* at 1:26-48.)

28. In 2001, there were also several known means for changing the direction of light emitted from headlamps:

> Headlamp aim can be varied using actuators [such as stepper motors] to move the headlamp housing relative to the vehicle. . .For headlamps with appropriately designed reflectors, mechanically moving the light source relative to the reflector can change headlamp beam direction as well as headlamp illumination intensity. Additionally, with HID headlamps, the headlamp beam can be aimed by "deflecting or perturbing the arc in such a way as to vary the lamp output.

(*Id.* at 1:52-65.)

29. Industry experts were also interested in continuously variable headlamps:

> Automatic control of continuously variable headlamps offers several potential benefits over automatic control of traditional on-off headlamps. Greater flexibility for illumination is available, allowing headlamp illumination to be better adapted to driving conditions. Also, continuously varying the headlamp illumination does not create rapid changes in illumination that may startle the driver.

(*Id.* at 2:13-19.)

30. As set forth in the '632 patent, "one of the oldest methods [for a continuously variable headlamp] is to aim the headlamp in the same direction as steered wheels. Another method increases the illumination range in proportion to vehicle speed." (*Id.* at 2:22-24.)

31. "Still another method of controlling headlamps has been developed for HID lamps. The increased brightness and blueish color of the HID lamps is particularly disrupting to oncoming drivers. Due to this disruptness effect, certain European countries require headlamp leveling systems". (*Id.* at 2:25-29.)

32. However "[o]ne problem with current continuously variable headlamp control systems is the inability to consider oncoming or leading vehicles in determining the illumination range of the headlamps." (*Id.* at 2:35-38.) Prior art solutions to modify illumination in view of oncoming and leading vehicles suffered from several problems. In particular, prior art systems lacked "color discriminating capability" and thus prior art imaging systems were "incapable of accurately determining lateral and elevational locations of headlamps or tail lights at any distance." (*Id.* at 2:54-60.)

33. As a result, prior to July, 2002, several of my patent filings, e.g. US 09/800,460 filed in March, 2001, which issued as U.S. Patent No. 6,587,573 ("Stam '573") in July, 2003, focused on how to improve automatic high beam dimming functionality by improving image

detection capability using an image array sensor to 1) distinguish "nuisance" light sources, tail lights and oncoming lights to avoid unnecessary switching to low beams; and 2) develop a more intelligent set of automatic high beam controls of halogen/HID light sources based on the location of detected objects. (Ex. PA-D, Stam '573.)

34. The patent applications I filed during this time, for example the '573 patent and its related filings (''573 Family of Patents"), describe detailed methods for distinguishing "nuisance" light sources, such as reflectors, street signs, streetlights and house lights, from taillights and oncoming headlight sources using a coordinate-specific image array sensor and microprocessor that employs various algorithms using location, brightness and color information.

35. Relying on this image detection capability, control strategies were outlined to adjust the illumination to avoid glare based on the identification or type of detected objects by 1) turning them on/off or varying the intensity of the light sources and 2) changing the direction of the light sources using motors. By way of example, representative illumination patterns are shown in Figs. 50A-50C of U.S. Patent No. 6,587,573. (Ex. PA-D, Stam '573, Figs. 50A-50C.)

36. In the '573 Family of Patents, the auto high beam control teachings contemplated halogen or HID light sources as those technologies were proven and reliable at the time. While I was at Gentex, high-powered white light LED technology was still in a nascent stage, with LED experts working on improvements to lamp technology and the related supportive environment needed for LED applications. As we detailed in the '573 Family of Patents, LEDs suffered from several technical constraints at the time, with issues related to product variability, power restrictions, thermal load requirements, production of white light and lighting output.

37. Although LEDs were known to be more energy efficient, the technology was overly complex, unreliable and too costly for front headlights. As a result, in 2003 and for several years

thereafter, those skilled in the art of auto headlight design and controls used LEDs for taillights and interior spotlights but not front headlights. By way of example, see EP1391347, filed in 2003 by HELLA (a global developer and manufacturer of automotive lighting technology), is directed to a pivoting, auto high-beam lamp devoid of any teaching of the use of LEDs (Ex. OTH-G, Krukenbaum '347 patent) and U.S. Patent No. 6,752,523 filed in October, 2002 by Koito (a global developer and manufacturer of automotive lighting technology), which discloses the use of LEDs for taillights (Ex. OTH-H, Takahashi '523 patent).

38. LED headlights were first used in vehicles in 2007-2008. *See*, Toyota's use of a partial LED headlight in 2007 and Audi's introduction of full LED headlights in 2008. (Ex. 1, Motor Authority, Ex. 2, Audi Technology Portal.) *See*, Koito's development chronology, which lists "Production and sales of the world's first LED Headlamps" in May 2007; HELLA's product history timeline, which lists "HELLA develops the first full LED headlamp for the Cadillac Escalade Platinum" in 2008 and "First full LED headlamp with AFS functions Audi A8" in 2010. (Ex. 5, Koito, pg. 1; Ex. 6, HELLA, pg. 1.)

VIII. SUMMARY OF THE '551 PATENT

39. The '551 Patent, entitled "Detector Controlled Illuminating System," issued on April 24, 2018 to inventor Yechezkal Evan Spero and is unassigned. The application which led to the '551 Patent was filed on January 24, 2012, with a priority date of July 12, 2002. (Ex. PAT-A, '551 Patent.)

40. Per the Detailed Description, the '551 Patent introduced a system "built around a 'digital' light source":

> **The system is built around a "digital" light source**. That is, the emanating lighting effect is the sum of the characteristics of a <u>multiplicity of discretely</u>

> controllable "digit" sources. The difference between the **individual 'digit' light sources** and their summation manifests itself in the resultant light characteristic, be in its intensity, spatial intensity distribution, spectral energy content and spectral intensity distribution. All of these characteristics are also variable with time.

(Ex. PAT-A, '551 Patent at 16:39-46, emphasis added.)

41. The '551 Patent discloses a myriad of flexible applications for this digital light source, centered around the "controllability offered by breaking the light output up into discrete specifically aimable and dimmable elements," which can be addressed by control electronics to effect intensity, spectrum and distribution." (*Id.* at 24:37-47.) For headlights, the disclosures identify yet another level of control: "[t]he flexible characteristics of the DLF [digital lighting fixture] allow for spatial variations of the intensity and spectral power distribution of the light over the area covered. When the element of variation of intensity and SPD [spectral power distribution] with time over the area covered is introduced another dimension of flexibility is introduced. These properties are unique to the DLF and allow them to deal with dynamic lighting situations in a way not afforded by prior-art lighting devices." (*Id.* at 57:24-37.)

42. The '551 Patent further explains how the "digital aspect" of the illuminating devices gives rise to "digital" "control capability" for individual LEDs or selectable groups of LEDs "which are smoothly added or detracted to generate a charged lighting effect":

> The multiple light sources of specific characteristics provide quanta of power and spectrum which are smoothly added or detracted to generate a changed lighting effect. The digital aspect arises from the sufficient progression of values, varying by minutes to produce a continuum so as to be non-discernable or irrelevant to the user. The added controllability is realized by **breaking up the light-production, into discrete, specifically aimable, and dimmable elements** which can be addressed by control electronics for the purpose of affecting the intensity, spectrum and spatial distribution of spectrum and of intensity of the illumination provided by

> the luminaire of the present invention.
>
> The overall combination of control capability and discrete light sources yields a digital lighting fixture. The terminology "digital" as used herein refers to the discrete nature of the multiple LED lamps provided in the luminaire, whereby "digital" control results from the individual control of the discrete, i.e. 'digital' lighting elements, the LEDs, in the luminaire.

(Ex. PAT-A, '551 Patent at 2:51-3:3, emphasis added.)

43. The '551 Patent also teaches how various applications can obtain a synergistic effect from the controllability offered by "discrete specifically aimable and dimmable elements" and image detection "devices capable of detection changes in the surrounding environment" "so as to provide the optimal lighting solution in real-time." (Ex. PAT-A, '551 Patent at 57:32-37.) By way of example, the '551 Patent discloses:

> Adaptive Frontal-lighting Systems which aid in seeing around curves and other features in the road. In these systems the light distribution pattern and color spectrum will be changed according to the instantaneous road conditions at hand. Thus, the headlamp now has much more flexibility than the high beam/low beam variation of today.

(*Id.* at 51:43-49.)

44. More particularly, the '551 Patent teaches how "[a]nalysis by a detector or an imaging system of the oncoming vehicles position (using its headlights for example) can be used to determine which exact aiming is the maximum allowable for any given traffic situation and road layout." (*Id.* at 52:62-65.)

45. The '551 Patent further discloses glare-free adaptive driving beam systems: "[u]sing color and pattern recognition techniques it is possible to determine what is a sign. It is then possible to provide the equivalent of "task lighting" and use the controller and properly aimed

SLS [solid state light source, e.g. LED] to follow and illuminate distant overhead and roadside signs for a longer time, yet not blind oncoming traffic due to the narrow beam." (*Id.* at 52:62 – 53:4.)

These teachings are reflected in base claim 6 and the new claims. *See*, claim 6 and claims 24, 32 and 56 below, which are representative of the new claims. The full set of new claims can be found at Ex. OTH-C, New Claims.

> *6. An illuminating device having automatic control of the light provided to an illuminated area comprising:*
>
> *a structure for incorporating illuminating device elements;*
>
> *one or more light sources incorporated in the structure and in communication with a power source;*
>
> *electronic circuitry apparatus for the controlled powering of the light source and other illuminating device elements;*
>
> *one or more cameras placed on the structure for detecting coordinate-specific information about the illuminated area, said camera in communication with power and control device elements;*
>
> *a controller integrated with the structure, in communication with the light source controlling power circuitry, said controller arranged to processes the information communicated from the camera and automatically control the light provided to the illuminated area.*

> *24. An illuminating device having automatic control of light provided to an illuminated area comprising:*
>
> *a structure for incorporating illuminating device elements, wherein the structure comprises a motor vehicle;*
>
> *a plurality of individually controllable LEDs incorporated in the structure via at least one headlamp mounted to the structure, each headlamp including at least one of the LEDs, the LEDs in communication with a power source;*

electronic circuitry apparatus for the controlled powering of the LEDs and other of the illuminating device elements;

one or more processors;

one or more sensors, including one or more cameras, placed on the structure for detecting coordinate-specific information about the illuminated area, at least one of said cameras in communication with power, and in communication with at least one of the one or more processors;

a controller, including at least one of the one or more processors, integrated with the structure via mounting, in communication with the LED controlling power electronic circuitry apparatus, said controller arranged to process the information communicated from the cameras and to automatically control the light provided to the illuminated area; and

memory storing instructions that, when executed by one or more processors of the controller, enable the controller to:

determine first coordinates corresponding to an other vehicle, based on the coordinate-specific information;

select a cluster of the LEDs that emit light toward at least a portion of the other vehicle based on the LEDs having emission aimings associated with the first coordinates; and

change emission of the selected cluster of LEDs relative to emission of other LEDs not included in the cluster to create headlamp illumination that preserves a first level of illumination illuminating past the other vehicle while preventing glare to a driver of the other vehicle.

32. An illuminating device having automatic control of light provided to an illuminated area comprising:

a structure for incorporating illuminating device elements, wherein the structure comprises a motor vehicle;

a plurality of individually controllable LEDs incorporated in the structure via at least one headlamp mounted to the structure, each headlamp including at least one of the LEDs, the LEDs in communication with a power source;

electronic circuitry apparatus for the controlled powering of the LEDs and other of the illuminating device elements;

one or more processors;

one or more sensors, including one or more cameras, placed on the structure for detecting coordinate-specific information about the illuminated area and positioned to capture an image of at least one target, at least one of said cameras in communication with power, and in communication with at least one of the one or more processors;

a controller, including at least one of the one or more processors, integrated with the structure via mounting, in communication with the LED controlling power electronic circuitry apparatus, said controller arranged to process the information communicated from the cameras and to automatically control the light provided to the illuminated area; and

memory storing instructions that, when executed by one or more processors of the controller, enable the controller to:

create a beam of diminished illumination illuminating at least a portion of the at least one target with non-glaring illumination, created within a broader field of illumination having different intensity than the beam, by one or more changes to characteristics of first light of a cluster of the LEDs providing the first light directed at the at least a portion and creating the beam, the beam diminished in intensity relative to the broader field of illumination illuminating at least above and on both sides of the beam; and

follow, based at least in part on data from one or more of the cameras, the at least one target with the diminished illumination as the at least one target changes location relative to the motor vehicle.

56. An illuminating device having automatic control of light provided to an illuminated area comprising:

a structure for incorporating illuminating device elements, wherein the structure comprises a motor vehicle;

a plurality of individually controllable LEDs incorporated in the structure via at least one headlamp mounted to the structure, each headlamp including at least one of the LEDs, the LEDs in communication with a power source;

electronic circuitry apparatus for the controlled powering of the LEDs and other of the illuminating device elements;

one or more processors;

one or more sensors, including one or more cameras, placed on the structure for detecting coordinate-specific information about the illuminated area and positioned to capture an image of at least one other vehicle ahead of the motor vehicle, at least one of said cameras in communication with power, and in communication with at least one of the one or more processors;

a controller, including at least one of the one or more processors, integrated with the structure via mounting, in communication with the LED controlling power electronic circuitry apparatus, said controller arranged to process the information communicated from the cameras and to automatically control the light provided to the illuminated area; and

memory storing instructions that, when executed by one or more processors of the controller, enable the controller to:

determine, based on data from one or more of the sensors, a vertical and horizontal position associated with the at least one other vehicle;

select a first cluster of the LEDs based at least in part on at least one of the vertical and horizontal position compared to known aimings of light associated with the first cluster; and

reduce intensity of illumination to non-glaring illumination of a first area associated with the at least one other vehicle, relative to intensity of illumination on both sides of the first area at elevations common with the first area illuminated by a second cluster of the LEDs, by control of emission from the first cluster.

IX. THE ASSERTED REFERENCES

A. STAM PCT

46. Filed on March 20, 2001, WO01/70538 ("Stam PCT") is directed to a system for controlling exterior vehicle lights, wherein the control system "comprises an imaging system configured to image the scene forward the controlled vehicle, and a control circuit for processing the image of the scene obtained from the imaging system and for controlling the exterior lights to change their beam pattern in response to objects detected in the processed scene." (Ex. PA-A, Stam PCT at 2-3.)

47. Per Stam PCT, the control circuit can turn the lights on/off or change brightness

and aim to produce beam patterns that avoid causing excessive glare:

> Ideally the exterior lights are controlled such that if an observer is located in a vehicle within a 'glare area' relative to the vehicle (i.e., the area in which the observer would perceive the brightness of the exterior lights as causing excessive glare), the beam illumination pattern is varied such that the observer is no longer in the glare area. The perceived brightness and/or glare area of the headlamps (and/or other exterior lights) may be varied by changing the illumination output of the one or more of the lights forming the headlamps, activating or deactivating some or all of the lights, altering the illumination pattern forward of the vehicle, or a combination of the above.

(*Id.* at p. 9.)

48. It should be noted that in the above portion of Stam PCT, activating or deactivating "some or all of the lights" refers to low beam, high beam or side bending lights, which is distinct from any teaching involving individual light emitters within a lamp.

49. Though the Stam PCT teachings are directed to halogen/HID light sources, it discloses two limited uses for LED applications. (*Id.* at 72-73.)

50. In view of the technical constraints that limited LED usage in headlights in 2001-2002, we limited our use of LEDs to two applications—headlamp steering and flashing:

> It has long been considered to be desirable to provide headlamps that can be steered in the direction that the vehicle is turning. It is also desirable to provide forward lighting that can be turned OFF, or substantially attenuated, for such a short period of time that the driver does not notice that the lights are OFF. In this way, reflections do not exist during image acquisition. Although a light emitting diode (LED) lamp can be used to provide these features in a cost-effective manner, <u>LED lamps producing enough light to implement a vehicle headlamp are not commercially available. LEDs suffer from a number of disadvantages that limit their application in vehicle headlamps, not the least of which are the relatively small amounts of</u>

> light produced by LEDs and manufacturability limitations when incorporating LEDS having exotic constructions. Because of these disadvantages, LED lamps have not been used to implement a vehicle headlamp despite the fact that LEDs are more rugged, more energy efficient, and significantly longer lasting than other light technologies. Additionally, means of producing white light from LEDS have only recently become practical as discussed in U.S. Patent No. 5,803,579, entitled ILLUMINATOR ASSEMBLY INCORPORATING LIGHT EMITTING DIODES, issued to John K. Roberts et al. on September 8, 1998.

(Ex. PA-A, Stam PCT at 72-73, emphasis added.)

51. As a result of these technical constraints, the Stam PCT disclosure is limited to two LED applications that could be used as a complement to and/or as a substitute for halogen/HID light sources, to address specific imaging challenges and improve auto high beam functionality. (*Id.* at 72-79.)

52. One of these LED applications focuses on the problem of flashing, which occurs when reflections off an object, such as a sign, are misinterpreted by the image sensor as an oncoming vehicle and trigger disruptive, rapid high/low beam flashing or cycling (repeatedly turning high beams on and off). As one solution for headlamp flashing, we contemplated the use of LEDs to rapidly reduce the light levels or turn the LEDs off, during an image-sampling interval, so that the reflections do not exist or interfere with image acquisition and processing. If done fast enough, the driver would not notice the change in light levels and the problem of flashing would be rectified. Such rapid reduction of intensity would be difficult or impossible with halogen/HID light sources. (*Id.* at 73-75.)

53. The second LED application focused on an improved way to "steer" the light source by replacing the halogen/HID light with an LED array that could be aimed at a fixed angle for auto high beam applications. To facilitate "steering" for auto high beam applications, we disclosed use

of an LED array to 1) help provide sufficient output light and 2) project light in more than one direction, *i.e.*, either horizontally (*see* Fig. 27) vertically (*see* Fig. 28) by providing a support member with two different angled orientations. In all cases, the LEDs in each array were connected together and operated by a single controller, such that the entire array would be on/off or dimmed, as shown in Fig. 26a. (*Id.* at 77-79.)

54. More specifically, in Fig. 26a, every optical radiation emitter (LED chip) 2603 is electrically connected together "to electrical conductor strip 2607 through a wire bond 2609 and a resistor 2611. Each of the emitters 2605 is connected to electrical conductor strip 2613 through a bonding wire 2615 and a resistor 2617." (*Id.* at 74.) Since electrical conductor strips 2607, 2613 are shown to be common to multiple LED chips, they necessarily are not individually controlled or controllable.

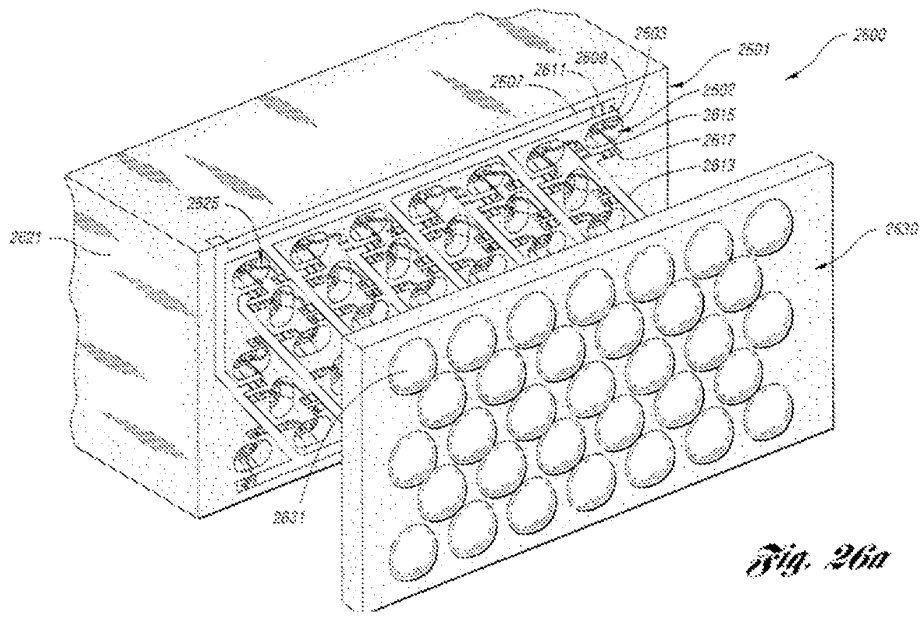

Fig. 26a

55. In Figs. 50a-50c, we illustrate the types of illumination beam patterns that can be produced from the disclosed auto high beam applications. In each case, the light source is treated

as a fixed block of light—whether halogen/HID or an LED array— that can be "steered" up/down or right/left, treating an array of LEDs as a unit that would be operated together.

56. Another headlamp configuration is depicted in Fig. 28, in which two LED arrays are provided, for low and high beams, and each array is treated as a single unit to be operated together:

> [a]nother alternative design for a headlamp for providing low and high beams is illustrated in Fig. 28. The headlamp 2800 includes a heat extraction member 2801 having two lamp sections 2803 and 2805. The heat extraction member 2801 is configured to include the two lamp sections 2803 and 2805, <u>each of which is substantially identical to lamp 2601 [in Figs. 26a]</u>. The heat extraction member provides two front faces at an angle of 1° to 2°, and may advantageously be angled at approximately 1.5°. The angle is exaggerated in Fig. 28 so that the angled surfaces are readily visible.

(*Id.* at 79, emphasis added.)

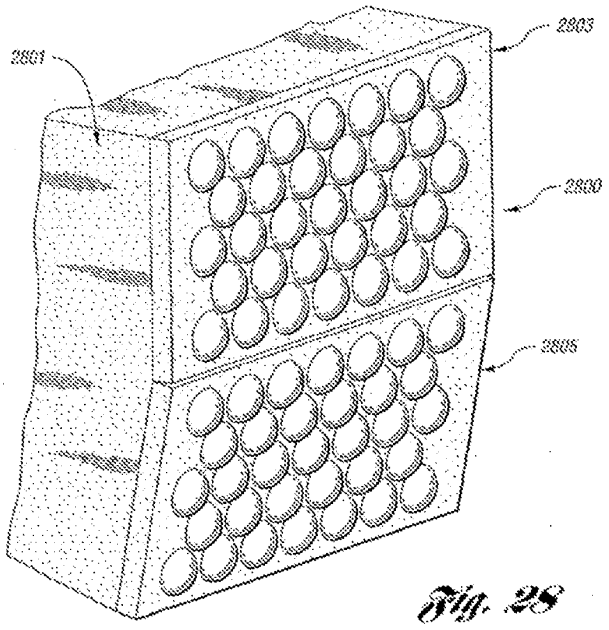

Fig. 28

57. In reference to Fig. 28 and the two separate LED lamp sections, 2803 and 2805 for

high and low beams, the specification states: "[b]y controlling the selection of the LEDs that are illuminated, the headlamps can be aimed." When read in context this sentence is consistent with the Stam PCT teaching that one or more LED arrays can be controlled as a single unit and in that capacity, the resulting beam formed by the headlamps can be steered and aimed.

58. In the '573 Family of Patents and Stam PCT, we did not disclose a digital headlamp that included individually controllable LEDs that could be controlled to illuminate a defined coordinate-specific region. Neither the '573 Family of Patents nor Stam PCT teach or suggest controlling the individual LED or a selectable group of LEDs within the array based on image detection at a given coordinate-specific location.

59. While the '573 Family of Patents and Stam PCT disclosed an improved continuously variable lighting system that could adjust the intensity of the high beams and aim the headlamp beam to avoid glaring an oncoming and/or preceding vehicle, in all cases, light was treated as a fixed block to be moved or adjusted in a particular direction or manner. As a result, the presence of one or more oncoming or preceding vehicles, would cause a driver's field of view to be lit primarily by the low beam lighting.

60. Additionally, neither the Stam PCT nor the '573 Family of Patents disclose use of a GPS or map data to generate coordinate-specific illumination patterns in response to upcoming road curvatures. We mention use of GPS embodiments to determine the location of the vehicle and whether the vehicle is on a residential, country or town street, to determine whether "super" high beams were appropriate. We also disclose "bending lights" in which the light source aim is varied horizontally or separate lamps are lit to provide better illumination when turning, which is detected based on vehicle steering. As with the other embodiments, we viewed each individual light source or an LED array as a single light source unit. We did not disclose individual control

of the LEDs within an array into individually controlled elements or clusters. As such, we did not disclose using image detection in combination with GPS and map data to generate illumination patterns formed by individual controlled LEDs or selectable clusters of LEDs within an array in response to upcoming road curvatures.

61. It was not until US Patent No. 6,861,809 which was filed on September 5, 2002 and published on June 12, 2003 that we first described the use of individually controllable LEDs where a portion of the LEDs within an array could be dimmed or turned off to avoid glaring an oncoming vehicle. (Ex. PA-E, Stam '809 patent.) *See* Fig. 7b and the accompanying description: "[a]lternatively, the window 700 may contain several independently controlled blocks 702 as shown in Fig. 7B. There may be any number of blocks, depending on the granularity of control that is desired. By selectively darkening these blocks, almost any desired beam pattern can be achieved." (*Id.* at 13:6-14:3, emphasis added.)

62. To the best of my recollection, no other companies were offering LED headlamp technology let alone contemplating this sort of LED-to-image correlation in 2003. Given the nascent state of LED technology, those in the field of automotive lighting, were not contemplating such LED applications at the time. As evidenced by two leading global headlamp suppliers, Koito and HELLA, per their websites, it wasn't until 2007 that the first LED headlamps were produced, and fully adaptive LED headlamps were not developed until 2010. *See*, Koito's development chronology, which lists "Production and sales of the world's first LED Headlamps" in May 2007; HELLA's product history timeline, which lists "HELLA develops the first full LED headlamp for the Cadillac Escalade Platinum" in 2008 and "First full LED headlamp with AFS functions Audi A8" in 2010. (Ex. 5, Koito, at 1; Ex. 6, HELLA, at 1.)

63. Prior to solving the issue of image detection, adaptive lighting technology that

correlated the LED controls to coordinate-specific image detection was not feasible.

B. HARBERS

64. U.S. Patent No. 6,406,172 ("Harbers") is directed to a headlamp and dynamic lighting system with a light source comprising a plurality of opto-electronic elements, preferably LEDs:

> The use of a plurality of opto-electronic elements with a relatively high luminous flux enables a vehicle headlamp to be manufactured having much more dynamic lighting possibilities than the known vehicle headlamp. The opto-electronic elements can be switched on and off, with the spatial distribution of the generated light beam depending on the conditions.

(Ex. PA-B, Harbers at 2:6-11.)

In Harbers, the spatial distribution of the light beam is adjustable based on predefined inputs:

> According to the invention, the spatial distribution of the light beam generated by the light source is continuously adjustable…Preferably, the spatial distribution is influenced by the speed of the vehicle, the rotational position of the steering wheel of the vehicle, the weather conditions, and it can also be influenced by the driver. Preferably, the spectral characteristics of the light beam generated by the light source depend on the position in the light beam. The light beam comprises at least two beam segments having essentially different spectral characteristics.

(Ex. PA-B, Harbers Abstract, numerical identifiers omitted.)

65. Though Harbers is continuously adjustable by the driver or in response to a specific set of defined inputs, Harbers doesn't disclose any sensor capable of detecting objects or targets in the illuminated area. Accordingly, while Harbers disclosed the use of LEDs in headlights, it failed to disclose use of any form of image detection and associated controls and thus did not teach adaptive lighting technology that correlated individual LED controls to image detection data.

66. Prior to the development of image detection systems--such as the kind disclosed in the '573 Family of Patents— headlamp systems employed auto high beam technology that generally relied on photodiode sensors, where any incident light would activate the photodiode sensors and cause the headlamp to unnecessarily switch from high beam to low beam. As pointed out in the '573 Family of Patents, the inability to discriminate between light sources minimized the effectiveness of prior art auto high beam technology. (Ex. PA-D, Stam '573 at 1:65 - 14:3.) Additionally, prior to the image detection systems disclosed in the '573 Family of Patents, continuously variable headlamps would aim the headlamp in the same direction as steered wheels and/or increase illumination range in proportion to vehicle speed, providing variability but not in reaction to the presence of oncoming or preceding vehicles. (Ex. PA-C, Stam '632 at 2:22-24.)

X. CLAIM 6 AND NEW CLAIMS 24-87 ARE PATENTABLE OVER THE COMBINATION OF STAM PCT AND HARBERS

A. THE STAM PCT AND HARBERS COMBINATION FAILS TO TEACH NUMEROUS LIMITATATIONS

67. As detailed below, Stam PCT and Harbers individually and on combination fail to teach many of the limitations of claim 6 and new claims 24-87.

68. Turning first to Stam PCT, while Stam PCT teaches the use of image detection and certain limited LED applications to address the problem of headlight glare, it fails to teach a headlamp with individually controllable LEDs and thus fails to teach the following limitations in claim 6 and by extension, new claims 24-87, as construed in Section VI above: 1) *electronic circuitry apparatus for the controlled powering of the* [individual LED] *light source*; and 2) *a controller ...in communication with the [individual LED] light source controlling power circuitry, arranged to processes* [*sic*] *the information communicated from the camera and automatically control the light provided to the illuminated area.*

69. In view of the known "disadvantages" with LEDs for vehicle headlamp applications, the disclosed LED headlamps in Stam PCT focus on two limited applications—headlamp flashing and headlamp steering.

70. Notably, Stam PCT lists the disadvantages that limit use of LEDs in vehicle headlamps, to explain why "LED lamps have not been used to implement a vehicle headlamp":

> LEDs suffer from a number of disadvantages that limit their application in vehicle headlamps, not the least of which are [1] the relatively small amounts of light produced by LEDs and [2] manufacturability limitations when incorporating LEDS having exotic constructions. **Because of these disadvantages, LED lamps have not been used to implement a vehicle headlamp**. . . Additionally, means of producing white light from LEDS have only recently become practical.

(Ex. PA-A, Stam PCT at 74, emphasis added.)

71. As a result, as detailed in paragraph 52 of this declaration, the disclosed embodiments used LEDs as a complement to and/or as a substitute for halogen/HID light sources, to improve auto high beam functionality. Similar to the halogen/HID light source embodiments, the LED embodiments in Stam PCT treated light as a fixed block to be moved or adjusted in a particular direction or manner—leaving a section of the driver's field of view to be lit primarily by low beam lighting.

72. In all LED embodiments, as depicted in Fig. 26a, the LEDs, in a given array were connected together [see 2615] and operated by a single controller, such that the entire array would be on/off or dimmed. (Ex. PA-A, Stam PCT at 140.)

73. More specifically, in Fig. 26a, every optical radiation emitter (LED chip) 2603 is electrically connected together "to electrical conductor strip 2607 through a wire bond 2609 and a resistor 2611. Each of the emitters 2605 is connected to electrical conductor strip 2613 through a

bonding wire 2615 and a resistor 2617." (*Id.* at p.74.) Since electrical conductor strips 2607, 2613 are shown to be common to multiple LED chips, they are thus not individually controlled or capable of facilitating control to selectable groups of LED chips.

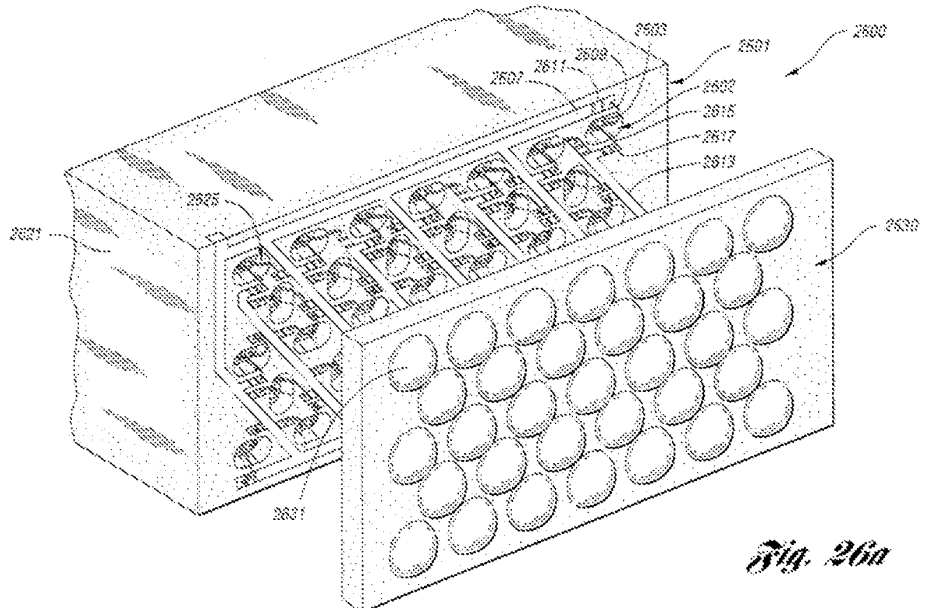

Fig. 26a

74. To clarify, in one section, the specification discloses the use of separate color emitters, for the purpose of creating white light and thus requires separate supplies for the different color emitters, but does not teach the ability to individually control an LED chip or selectable clusters of LED chips: "The circuit traces disclosed in Fig. 26a illustrate a pattern that may be used <u>where separate supply is provided for the different emitters</u>." (*Id.* at p.77.)

75. While Stam PCT can provide controlled powering to the LED array as a single fixed unit—such that the entire array can be on/off or dimmed—it is incapable of providing *controlled powering* to individual LEDs. Thus, under the proper construction of *light source* detailed in Section VI, it fails to provide *electronic circuitry apparatus for the controlled powering of the* [individual LED] *light source*—a limitation in claim 6 and all new claims.

76. Additionally, because there is no mechanism for controlled powering of individual LEDs, the controller cannot be *in communication with the* [individual LED] *light source controlling power circuitry*, as required by claim 6. Finally, because the LED embodiments in Stam PCT are treated as a fixed block to be moved or adjusted in a particular direction or manner, the controller is incapable of *being arranged to processes* [*sic*] *the* [coordinate specific] *information communicated from the camera and automatically control the light provided to the illuminated area.*

77. Stam PCT also fails to correlate individual LED controls to sensor data to diminish/enhance illumination at a coordinate-specific region, to provide optimized and non-glaring illumination in the presence of an oncoming or preceding vehicle. (Ex. PA-A, Stam PCT.)

78. As a result, Stam PCT does not teach or suggest controlling an individual LED or group of LEDs within an array, responsive to coordinate-specific image detection data, so that the controller 1) per claim 6, is *arranged to processes* [*sic*] *the* [coordinate-specific] *information communicated from the camera and automatically control the light provided to the illuminated area*; 2) per new claim 24 can *change emission of the selected cluster of LEDs relative to emission of other LEDs not included in the cluster to create headlamp illumination that preserves a first level of illumination illuminating past the other vehicle while preventing glare to a driver of the other vehicle;* 2) per new claim 32, *follow, based at least in part on data from one or more of the cameras, the at least one target with the diminished illumination as the at least one target changes location relative to the motor vehicle;* and 3) per new claim 56, *select a first cluster of the LEDs based at least in part on at least one of the vertical and horizontal position compared to known aimings of light associated with the first cluster; and reduce intensity of illumination to non-glaring illumination of a first area associated with the at least one other vehicle, relative to*

intensity of illumination on both sides of the first area at elevations common with the first area illuminated by a second cluster of the LEDs, by control of emission from the first cluster. (Ex. OTH-F, Side by side comparison.)

79. Simply put, Stam PCT fails to optimize lighting patterns to match the particular road scene. By treating light as a fixed block, in the presence of objects/targets, high beams—which output significantly brighter light and enhance safety— are shifted away from the road scene rather than individually controlled at a coordinate-specific level to provide optimized, non-glaring lighting patterns.

80. Accordingly, Stam PCT fails to teach the following limitations in base claim 6 and by extension, claims 24-87: 1) a headlamp with *electronic circuity apparatus for the controlled powering of the light source and other illuminating device elements* and 2) a controller *in communication with the light source controlling power circuitry,* that a) per claim 6 is *arranged to processes [sic] the information communicated from the camera and automatically control the light provided to the illuminated area*; b) per representative claim 56, can be controlled to illuminate a coordinate-specific area based on *known aimings of LEDs*; c) per representative claim 24 can *emit light toward at least a portion of the other vehicle based on the LEDs having emission aimings associated with the first coordinates*; and d) per representative claim 32 *follow, based at least in part on data from one or more of the cameras, the at least one target. See,* Ex. OTH-F which provides each of the reexamination independent claims side-by-side, to highlight the missing limitations in all claims. (Ex. OTH-F, Side by side comparison.)

81. Turning next to Harbers, though Harbers teaches that "spatial distribution of the light beam generated by the light source is continuously adjustable" by opto-electronic elements and thus discloses the *electronic circuitry apparatus for the controlled powering of the light source*

limitation, the combination of the '538 PCT and Harbers fails to teach many of the limitations of claim 6 and the new claims. (Ex. PA-B, Harbers.)

82. While the opto-electronic elements in Harbers are continuously adjustable by the driver or in response to a specific set of defined inputs, Harbers doesn't disclose any sensor capable of detecting objects or targets in the illuminated area, or per claim 6, a camera *for detecting coordinate-specific information about the illuminated area, said camera in communication with power and device control elements*. (Ex. PA-B, Harbers.)

83. Although Harbers discloses "ordering, providing and selectively switching on and off opto-electronic elements…in the form of an array" in response to the velocity of the vehicle, rotational position of the steering wheel, bad weather or in dimly-lit areas (*Id.* at 7:11-22), it fails to correlate individual LED controls to coordinate-specific camera/sensor data, as required by claims 6 and 24-87 and thus fails to disclose a digital headlamp that utilizes an adaptive driving beam to address glare. (Ex. OTH-C, New Claims.)

84. More specifically, in reference to claim 6, Harbers fails to disclose *one or more cameras placed on the structure for detecting coordinate-specific information about the illuminated area, said camera in communication with power and control device elements; and 2)* Harbers fails to teach a control strategy that correlates the coordinate-specific information from the camera, and controlled powering of the light source, wherein the controller *in communication with the light source controlling power circuitry,* is *arranged to processes* [*sic*] *the information communicated from the camera and automatically control the light provided to the illuminated area.* (Ex. PA-B, Harbers.) Harbers likewise fails to provide any of the following limitations, in all new claim sets[3]: 1) sensors for detecting coordinate-specific information-- *one or more sensors,*

[3] A claim set is an independent claim and the claims that depend from that independent claim.

including one or more cameras, placed on the structure for detecting coordinate-specific information about the illuminated area; 2) controllers processing the sensor data- *a controller, including at least one of the one or more processors, integrated with the structure via mounting, in communication with the LED controlling power electronic circuitry apparatus, said controller arranged to process the information communicated from the cameras and to automatically control the light provided to the illuminated area;* 3) controlling an individual LED or group of LEDs within an array, responsive to coordinate-specific image detection data based on known aimings or coordinates of those LEDs, for example, per claim 48: *illuminate a portion of at least one object, indicated by data from at least one of the one or more sensors, by selecting a first cluster of the LEDs to emit first light directed towards a first area including the at least the portion of at least one object, the first area determined based at least in part on the data, the first cluster selected based at least in part on known aimings of light associated with the first cluster determined to correspond to the first area*; and 4) a control strategy that correlates LED controls to coordinate-specific sensor data of an object, to optimize illumination in a glare-free manner, for example as reflected in *claim 24*: *change emission of the selected cluster of LEDs relative to emission of other LEDs not included in the cluster to create headlamp illumination that preserves a first level of illumination illuminating past the other vehicle while preventing glare to a driver of the other vehicle.* (Ex. OTH-F, Side by side comparison.)

85. Stam PCT likewise fails to teach the last two limitations identified in paragraph 84, namely controlling individual LEDs responsive to coordinate-specific image detection data, based on known aimings or coordinates of those LEDs and a control strategy that correlates individual LED controls to coordinate-specific sensor data of an object/target to diminish/enhance illumination of a coordinate-specific region.

86. As a result, it is my opinion that each reference is missing numerous features of the new reexamination claims and even if combined, the combination of Stam PCT and Harbers taken as a whole fails to teach or suggest a headlamp that correlates LED controls to coordinate specific sensor data of a target to diminish/enhance illumination at a coordinate-specific region.

87. Taken together, Stam PCT and Harbers provide no teachings on methods to optimize illumination—for example, high beams, which output significantly brighter light and enhance safety—in the presence of objects or upcoming curvatures in the road.

88. More specifically, in reference to exemplary claims 6, 24, 32 and 56, the combination of Stam PCT and Harbers, taken as a whole fails to teach or suggest, *inter alia*, controlling an individual LED or group of LEDs within an array, responsive to coordinate-specific image detection data, so that the controller 1) per claim 6, *in communication with the light source controlling power circuitry*, is *arranged to processes* [*sp*] *the information from the camera and automatically control the light provided to the illuminated area*; 2) per new claim 24, can *change emission of the selected cluster of LEDs relative to emission of other LEDs not included in the cluster to create headlamp illumination that preserves a first level of illumination illuminating past the other vehicle while preventing glare to a driver of the other vehicle;* 3) per new claim 32, *create a beam of diminished illumination illuminating at least a portion of the at least one target with non-glaring illumination, having different intensity than the beam, by one or more changes to characteristics of first light of a cluster of the LEDs providing the first light directed at the at least a portion and creating the beam, the beam diminished in intensity relative to the broader field of illumination illuminating at least above and on both sides of the beam; and follow, based at least in part on data from one or more of the cameras, the at least one target with the diminished illumination as the at least one target changes location relative to the motor vehicle;* and 4) per

new claim 56, *select a first cluster of the LEDs based at least in part on at least one of the vertical and horizontal position compared to known aimings of light associated with the first cluster; and reduce intensity of illumination to non-glaring illumination of a first area associated with the at least one other vehicle, relative to intensity of illumination on both sides of the first area at elevations common with the first area illuminated by a second cluster of the LEDs, by control of emission from the first cluster*. (Ex. OTH-F, Side by side comparison.)

89. Additionally, I understand that to safeguard against hindsight reasoning, there must be an actual reason why a skilled artisan would have combined the elements in the manner claimed. I further understand that using an applicant's disclosure as a blueprint to reconstruct the claimed invention from isolated pieces of the prior art is impermissible, and that obviousness is to be judged at the point in time when the invention was made.

B. NO MOTIVATION TO COMBINE

90. In this case, there is no motivation to combine the asserted references because the combination of Stam PCT and Harbers changes the principle of operation of Harbers, which provides lighting that is more dynamic but limited to defined vehicle inputs such as vehicle speed or steering wheel position and/or manual adjustments. Harbers does not provide any set of operations that include a controller operating with sensor data, e.g. camera data, to automatically control the light based on inputs of objects/targets in the illuminated area. Any hypothetical combination of the teachings of Stam PCT and Harbers would require a substantial reconstruction and redesign of the elements shown in Harbers as well as a fundamental change in its basic principles of operation.

91. Notably, in 2000, when Harbers was filed, although camera-based image detection systems were disclosed, Harbers did not describe or suggest that their system did or could include

any such LED-to-image detection correlation. Moreover, while the problem of headlamp glare was well known in 2000, the Harbers system is not directed to that problem. Accordingly, any combination of Stam PCT and Harbers, requires that the principle of operation in Harbers undergo a substantial change. For these reasons, absent hindsight bias, a POSITA in 2002 would have no motivation to combine Stam PCT and Harbers.

C. TEACHING AWAY

92. Further, I understand that to avoid the strong potential for hindsight bias, the doctrine of teaching away requires that patent references should be reviewed as a whole and statements that teach away from a specific usage must be considered as part of an obviousness analysis.

93. Per Stam PCT,

> **LEDs suffer from a number of disadvantages that limit their application in vehicle headlamps**, not the least of which are [1] the relatively small amounts of light produced by LEDs and [2] manufacturability limitations when incorporating LEDS having exotic constructions. **Because of these disadvantages, LED lamps have not been used to implement a vehicle headlamp**. . . Additionally, means of producing white light from LEDS have only recently become practical.

(Ex. PA-A, Stam PCT at 74, emphasis added.)

94. It is my opinion that given the clear statements in Stam PCT regarding the constraints and technical issues surrounding use of LEDs for headlights, during the 2002-2003 time frame, a POSITA would be discouraged from using individually controlled LEDs or otherwise expanding usage of LEDs in headlights beyond the two limited applications of LED arrays expressly disclosed, particularly in the direction taken by the claims, for example in claim 56, where the illumination of an area or object/target is changed responsive to data from the

camera/sensors by *selecting a cluster of individual LEDs* within an array based on *known aimings* of the LEDs, to enhance/diminish illumination of an object/target relative to other coordinate-specific regions in the illuminated area.

D. CONTEMPORANEOUS FILINGS ESTABLISH POSITA MINDSET

95. Moreover, as evidenced by contemporaneous prior art filings, those skilled in the art of auto headlight design in 2002, needed to rely on proven technologies—e.g. halogen and xenon applications. LED technology was not viewed as suitable for headlamp applications.

96. From 2000-2003, it was well known that Gentex was a leader in LED lighting products and image sensing products. While the two product teams and technical disciplines were, as a matter of course, separate and distinct, a working relationship between team members forged a unique opportunity for interdisciplinary engagement and collaboration. This interdisciplinary engagement gave rise to the first family of patents—the '573 Family of Patents—where image detection technology was merged with LED technology for headlight applications. It bears emphasis that in 2002-2003, the field of LEDs and image detection were emerging technologies, each under development for distinct product offerings. To my knowledge, prior to the advent of the '573 Family of Patents, these technology disciplines were wholly distinct. Thus, it would <u>not</u> have been obvious for a POSITA in 2002-2003 to combine coordinate-specific image detection technology with any LED functionality, let alone a digital headlight that for example, per new claim 24, *determine first coordinates corresponding to an other vehicle, based on the coordinate-specific information; select a cluster of the LEDs that emit light toward at least a portion of the other vehicle based on the LEDs having emission aimings associated with the first coordinates; and change emission of the selected cluster of LEDs relative to emission of other LEDs not included in the cluster to create headlamp illumination that preserves a first level of illumination*

illuminating past the other vehicle while preventing glare to a driver of the other vehicle.

97. In sum, it is my opinion that a POSITA during the 2002-2003 timeframe would lack motivation to combine teachings from Stam PCT and Harbers in the manner claimed, for the following reasons: 1) Stam PCT teaches away from use of individually controlled LEDs as recited in the claimed invention; 2) any hypothetical combination is inconsistent with the principle of operation of Harbers and thus a by-product of hindsight bias; and 3) during the relevant time, the evolving fields of LED technology and image detection were wholly separate fields.

XI. OBJECTIVE EVIDENCE OF NONOBVIOUSNESS

98. I understand that objective evidence, including for example evidence of teaching away, industry praise, failure of others and long felt but unmet need, is relevant to whether a claim is nonobvious. Below are my opinions concerning specific objective evidence that shows in the form of long felt, but unmet need and industry praise, that further bolsters the patentability of the claimed invention--providing objective evidence that the glare-free adaptive driving beam technology claimed in the '551 Patent is nonobvious over the asserted references.

A. INDUSTRY PRAISE FOR THE GLARE-FREE ADAPTIVE DRIVING BEAM TECHNOLOGY OF THE REEXAMINATION CLAIMS

99. Over the years, numerous industry organizations, such as NHTSA, AAA and IIHS, industry publications, such as AutoWeek and Driving Vision News, and Automotive Industry Awards such as the PACE Award conferred by Automotive News have provided industry praise for the glare-free adaptive driving beam technology covered in the reexamination claims. A few recent examples of such industry praise, correlated to the 2018 lead up to the proposed NHTSA amendments, are provided below.

100. In a 2019 report AAA stated:

> Increasing roadway lighting without creating glare for other motorists should increase the safety of nighttime driving. This is the promise of adaptive driving beam headlamp technologies. NHTSA describes adaptive driving beam ["ADB"] as, "a type of adaptive front-lighting system that automatically enables upper beam headlamps and adapts their beam patterns to create a shaded area around oncoming and preceding vehicles to improve long-range visibility for the driver without causing discomfort, distraction, or glare to other road users.

(Ex. 8, AAA 2019 report at 3, emphasis added.)

101. The 2019 AAA report further stated:

> Auto-dimming systems (and manual high-low beam switching) are inherently limited. These systems must switch to low beam in the presence of traffic, resulting in a sharp reduction in roadway lighting. All headlamp systems which are limited to either high or low beam operation cannot avoid causing glare to other vehicles when driving on undulating roadways and cresting hills. ADB headlamp systems, with selective activation or shading of specific elements of the headlight beam, hold the promise to successfully address this major shortcoming of all current headlamp systems.

(Ex. 8, AAA, 2019 report at 56, emphasis added.)

102. An April 14, 2021 article by AutoWeek explains the problem with prior automatic high-beam systems and praises the ADB technology solution:

> [e]xisting automatic high-beam headlight systems are great, but there are limitations to what they can do. If you're driving in a suburban area with traffic and streetlights, they can become confused and leave the bright beams on when they shouldn't, or in some cases they can end up switching between low and high beam lights rapidly, which is both annoying and bad for visibility. Smart headlights help alleviate these problems by reading the road and surrounding conditions and applying light only where it is needed. Instead of the need to switch between two

> brightness settings, adaptive headlights' brightness and shape change in response to surrounding conditions. Where some automatic high beam systems become confused between streetlights and oncoming headlights and switch off when they shouldn't, smart headlights' advanced sensors and detection systems will eliminate the errant shifts in brightness.

(Ex. 7, Autoweek at 3, emphasis added.)

103. The Autoweek article goes on to establish the unmet need and praises ADB technology:

> It's no secret that the headlights on new cars are getting brighter. Now, even low beam headlights can be distracting to other drivers and pedestrians. Because adaptive headlights keep the bright lights off of pedestrians and other drivers, it's easier for people walking to stay out of the way and for other drivers to see where they're going. If there's an oncoming vehicle, the beam is partially blocked or turned off so that the other driver isn't blinded, but the rest of the road remains illuminated by bright light, which greatly improves their visibility without drastically reducing yours.

(Ex. 7, Autoweek at 4, emphasis added.)

104. Similarly, Driving Vision News states: "The benefit of a glare-free function is not only to shadow out other cars but also to provide further visibility for upcoming curves and dangerous situations; there is a clear safety gain by illuminating this curve in front of the driver." (Ex. 9, Driving Vision News at 1, emphasis added.)

105. It is my understanding that evidence of industry praise of a claimed invention that embodies the patent claims weighs in favor of a finding of nonobviousness.

106. I further understand that there must be a nexus between the industry praise and the claimed invention. To that end, a few exemplary publications providing industry praise for ADB technology, are outlined side-by-side with exemplary reexamination claims and support from the

'551 Patent specification for these claims, to establish nexus between the industry praise and the reexamination claims. *See*, Ex. OTH-E, '551 Industry praise nexus support document. The right-hand column includes an explanation as to how a person of skill in the art would understand the praise verbiage.

107. Below, by way of example, I have correlated each limitation of claim 24 with the industry praise verbiage and an explanation of the nexus between the two. The rationale articulated with respect to claim 24 applies to all similar limitations in claim 6 and the new reexamination claims. *See,* Ex. OTH-F, Side by side comparison.

108. In this paragraph I will review the nexus between the preamble in claim 24, *[a]n illuminating device having automatic control of the light provided to an illuminated area comprising*, and the praise verbiage from the PACE Award Automotive News article which provides: HELLA "has won the prestigious 2014 Automotive News PACE Award for its industry-first adaptive LED Matrix Beam technology. . . HELLA's "glare-free high-beam" **headlights use individually controlled LEDs that adjust automatically** to real-time traffic conditions to reduce glare for other drivers" (Ex. 10, PR Newswire at 1.) It is my opinion that, from the described functionality, it's clear to a person skilled in the art that the praise is directed to an *illuminating device* as laid out in the preamble. *See*, Ex. OTH-E, '551 Industry praise nexus support document, at 1, 10, 27 and 45.

109. This paragraph addresses the limitation in claim 24, *a structure for incorporating illuminating device element* and the praise verbiage from the PACE Award Automotive News article provides: "The system automatically adjusts **a car's headlamps** to deliver 'glare free' illumination, dimming or switching on and off light sources based on traffic conditions." (Ex. 10, PR Newswire at 1.) It is my opinion that, from the described functionality, it's clear to a person

skilled in the art that the praise is directed to *a structure for incorporating illuminating device elements. See*, Ex. OTH-E, '551 Industry praise nexus support document, at 1, 11, 27 and 45.

110. In this paragraph I will review the nexus between the limitation *a plurality of individually controllable LEDs incorporated in the structure via at least one headlamp mounted to the structure, each headlamp including at least one of the LEDs, the LEDs in communication with a power source* and the praise verbiage from the PACE Award Automotive News article provides: HELLA "has won the prestigious 2014 Automotive News PACE Award for its industry-first adaptive LED Matrix Beam technology. . . HELLA's "glare-free high-beam" **headlights use individually controlled LEDs that adjust automatically** to real-time traffic conditions to reduce glare for other drivers." (Ex. 10, PR Newswire at 1.) It is my opinion that, from the described functionality, a person skilled in the art would readily understand that such an automatically adjustable system would include individually controllable LEDs in communication with a power source. *See*, Ex. OTH-E, '551 Industry praise nexus support document, at 5, 14, 30-31, 48.

111. This paragraph addresses the limitation in claim 24, *electronic circuitry apparatus for the controlled powering of the LEDs and other of the illuminating device elements* and the praise verbiage from the PACE Award Automotive News article which provides:

> HELLA . . . has won the prestigious 2014 Automotive News PACE Award for its industry-first adaptive LED Matrix Beam technology. . . HELLA's "glare-free high-beam" **headlights use individually controlled LEDs that adjust automatically** to real-time traffic conditions to reduce glare for other drivers. The system automatically adjusts **a car's headlamps** to deliver 'glare free' illumination, dimming or switching on and off light sources based on traffic conditions.

(Ex. 10, PR Newswire at 1, emphasis added; Ex. OTH-E, '551 Industry praise nexus support document.)

It is my opinion that, from the described functionality, it's clear that the praise is directed to an illuminating device, including *electronic circuitry apparatus for the controlled powering of the LEDs and other of the illuminating device elements*. (*See,* Ex. OTH-E, '551 Industry praise nexus support document, at 7, 16, 33 and 51).

112. This paragraph addresses the limitation in claim 24, *one or more sensors, including one or more cameras, placed on the structure for detecting coordinate-specific information about the illuminated area, at least one of said cameras in communication with power, and in communication with at least one of the one or more processors* and the praise verbiage from the PACE Award Automotive News article: "The **new Matrix Beam system combines a front camera**, high-performance software and "intelligent lighting" technology **to recognize cars that are being followed as well as oncoming traffic**." (Ex. 10, PR Newswire at 1, emphasis added). It is my opinion that, from this sentence, it's clear to a person skilled in the art that the industry praise is directed to an illuminating device that includes the details of the camera sensor limitation. (*See,* Ex. OTH-E, '551 Industry praise nexus support document, at 8, 17, 34, and 52.)

113. This paragraph addresses the limitation in claim 24, *a controller, including at least one of the one or more processors, integrated with the structure via mounting, in communication with the LED controlling power electronic circuitry apparatus, said controller arranged to process the information communicated from the cameras and to automatically control the light provided to the illuminated area* and the praise verbiage from the PACE Award Automotive News article which provides:

> A leader in automotive lighting and electronics, HELLA's "glare-free high-beam" headlights **use individually controlled LEDs that adjust automatically to real-time traffic conditions** to reduce glare for other drivers. **The new Matrix Beam system combines a front camera, high-performance software and "intelligent**

> **lighting" technology to recognize cars that are being followed as well as oncoming traffic.**
>
> **The system automatically adjusts a car's headlamps to deliver "glare free" illumination, dimming or switching on and off light sources based on traffic conditions.**

(Ex. 10, PR Newswire at 1, emphasis added.)

It is my opinion that, from the above sentences and the inherent knowledge possessed by a person skilled in the art, it's clear that the industry praise is directed to an illuminating device that includes the details of the controller limitation, wherein the controller processes information from the camera. (*See,* Ex. OTH-E, '551 Industry praise nexus support document, at 9-10, 18-19, 35-36, 53-54.)

114. This paragraph addresses the limitation in claim 24, *memory storing instructions that, when executed by one or more processors of the controller, enable the controller to,* and the praise verbiage from the PACE Award Automotive News article which provides:

> A leader in automotive lighting and electronics, HELLA's "glare-free high-beam" headlights **use individually controlled LEDs that adjust automatically to real-time traffic conditions** to reduce glare for other drivers. **The new Matrix Beam system combines a front camera, high-performance software and "intelligent lighting" technology to recognize cars that are being followed as well as oncoming traffic.**
> **The system automatically adjusts a car's headlamps to deliver "glare free" illumination, dimming or switching on and off light sources based on traffic conditions.**

(Ex. 10, PR Newswire at 1, emphasis added.)

It is my opinion that, from the above sentences and the inherent knowledge of a person skilled in

the art, in order to implement the "high performance software" it's clear that *memory storing instructions*" would necessarily be provided. (*See,* Ex. OTH-E, '551 Industry praise nexus support document, at 20, 36-37, and 54-55.)

115. This paragraph addresses the limitation in claim 24, *enable the controller to . . determine first coordinates corresponding to an other vehicle, based on the coordinate-specific information* and the praise verbiage from the PACE Award Automotive News article which provides:

> A leader in automotive lighting and electronics, HELLA's "glare-free high-beam" headlights **use individually controlled LEDs that adjust automatically to real-time traffic conditions** to reduce glare for other drivers. **The new Matrix Beam system combines a front camera, high-performance software and "intelligent lighting" technology to recognize cars that are being followed as well as oncoming traffic**.
>
> **The system automatically adjusts a car's headlamps to deliver "glare free" illumination, dimming or switching on and off light sources based on traffic conditions**.

(Ex. 10, PR Newswire at 1, emphasis added.)

It is my opinion that, from the above sentences and the inherent knowledge of a person skilled in the art, it's clear that the industry praise is directed to an illuminating device that determines the position of at least one other vehicle. (*See,* Ex. OTH-E, '551 Industry praise nexus support document, at 20-21, 42, and 55-56.)

116. This paragraph addresses the limitation in claim 24, *enable the controller to . . . select a cluster of the LEDs that emit light toward at least a portion of the other vehicle based on the LEDs having emission aimings associated with the first coordinates*; and the praise verbiage

from the PACE Award Automotive News article:

> The new Matrix Beam system combines a front camera, high-performance software and "intelligent lighting" technology to recognize cars that are being followed as well as oncoming traffic.
>
> The system automatically adjusts a car's headlamps to deliver "glare free" illumination, dimming or switching on and off light sources based on traffic conditions.
>
> **Individually controlled LEDs also provide two or more dark zones with "light in-between," allowing continuous use of a vehicle's high-beams to maximize visibility and provide a safer driving experience**.

(Ex. 10, PR Newswire at 1, emphasis added.)

It is my opinion that, from the above sentences and the inherent knowledge of a person skilled in the art, an illuminating device that includes "individually controlled LEDs" necessarily selects the LEDS to be aimed based on the position of the detected vehicle, per the *select a cluster* limitation. (*See,* Ex. OTH-E, '551 Industry praise nexus support document, at 22-23 and 56-57.)

117. This paragraph addresses the limitation in claim 24, *enable the controller to . . . change emission of the selected cluster of LEDs relative to emission of other LEDs not included in the cluster to create headlamp illumination that preserves a first level of illumination illuminating past the other vehicle while preventing glare to a driver of the other vehicle* and the praise verbiage from the PACE Award Automotive News article which provides:

> The new Matrix Beam system combines a front camera, high-performance software and "intelligent lighting" technology to recognize cars that are being followed as well as oncoming traffic.
>
> The system automatically adjusts a car's headlamps to deliver "glare free"

illumination, dimming or switching on and off light sources based on traffic conditions.

Individually controlled LEDs also provide two or more dark zones with "light in-between," allowing continuous use of a vehicle's high-beams to maximize visibility and provide a safer driving experience.

(Ex. 10, PR Newswire at 1, emphasis added.)

It is my opinion that, from the above sentences it would be clear to a person skilled in the art that the industry praise description of an illuminating device with "two or more dark zones with 'light-in-between" to maximize visibility, corresponds to the above-identified claim limitation, providing reduced illumination in the dark zones relative to the illumination on both sides of the dark zone. (*See,* Ex. OTH-E, '551 Industry praise nexus support document, at 24-25, 42, and 61-62.)

118. As detailed with respect to representative claim 24 above and representative claims 6, 24, 32 and 56 in Ex. OTH-E, '551 Industry praise nexus support document, the objective evidence of industry praise and the nexus to the reexamination claims supports my underlying conclusion that the reexamination claims are nonobvious over the combination of Stam PCT and Harbers and are thus patentable. (*See,* Ex. OTH-E, '551 Industry praise nexus support document.)

B. LONG FELT BUT UNMET NEED

119. Automotive companies and the industry at large have long recognized the two-fold need for 1) increased visibility at night and 2) avoiding the discomfort of glaring headlamps.

120. This two-fold need was first solved by the glare-free adaptive driving beam systems described by Spero in the '551 Patent, which gave rise to claim 6 and the new reexamination claims, supported by the 2002 provisional application filing by Spero.

121. As evidenced by contemporaneous prior art filings in 2002-2003, LED technology

was in nascent stages and not viewed as suitable for headlamp applications. In 2003 and for several years thereafter, those skilled in the art of auto headlight design and controls used LEDs for taillights and interior spotlights but not front headlights. By way of example, see EP1391347, filed by HELLA in July, 2003 which is directed to a pivoting, auto high-beam lamp devoid of any teaching of the use of LEDs and U.S. Patent No. 6,752,523 filed in October, 2002 by Koito, which discloses the use of LEDs for taillights but not headlights. It was not until 2006-2009 that automotive lighting companies began filing patents directed to digital headlights for adaptive driving beam technology. (*See*, Ex. OTH-G, Krukenbaum '347 patent and Ex. OTH-H, Takahashi '523 patent.) Notably, LED headlights were first used in vehicles in 2007-2008. *See*, Toyota's use of a partial LED headlight in 2007 and Audi's introduction of full LED headlights in 2008, (Ex.1, Motor Authority; Ex.2, Audi technology portal).

122. Regulatory restrictions by the National Highway Traffic Safety Administration (NHTSA) have prevented adaptive driving beam technology from activation in the US, though such technology has been employed outside the US for years. For a period of several years, starting in 2013, OEMs petitioned NHTSA for a change in regulations. In 2018, NHTSA announced proposed rules to amend the regulations to allow adaptive driving beam (ADB) technology. (Ex. 4, NHTSA Proposed Rule 2018, at 1.) In July 2020, Alliance for Automotive Innovation ("Auto Innovators") consisting of 37 OEMs and "value chain partners" provided supplemental comments to the NHTSA notice of proposed rulemaking detailing their position on the proposed rulemaking. (Ex. 11, Alliance for Automotive Innovation at 1.)

123. The supplemental comment filed by the Alliance for Automotive Innovation, makes a compelling case for why the prior art auto-high beam applications did not satisfy the long-felt need for "adaptive driving beam technology," which refers to adaptive LED headlights that

address high beam glare through coordinate-specific control strategies (Ex. 11, Alliance for Automotive Innovation). By way of example, the Alliance for Automotive Innovation, which includes the majority of the global auto industry, acknowledged that "an average of 0.3% of nighttime fatal crashes list glare as a contributing factor, alternatively data shows that over 70% of pedestrian fatalities have occurred at night. IIHS "found that between 2009 and 2016, pedestrian deaths in dark conditions increased 56%." (*Id.* at 8, emphasis added.) In response to these reports, the supplemental comments filed by the Alliance, concludes "improved visibility benefits of ADB systems can help to decrease fatalities and injuries associated with these crashed. The increased illumination from ADB systems can contribute to considerably improving a driver's ability to identify obstacles or pedestrians on and off the roadway." Finally, the supplemental comments state, "IIHS has studied headlamp performance and real-world implications . . . IIHS found that, "The lower beams of many headlight systems with poor ratings don't provide enough light for a driver going 55 mph on a straight road to stop in time after spotting an obstacle in his or her lane." (*Id.* at 11.)

124. One industry publication from 2014, underscores the longfelt, but unmet need for a glare-free headlight that optimizes illumination: "[e]ven after 130 years of headlight development, more than half of vehicle crashes and fatalities occur at night despite significantly less traffic. More than 300,000 crashes and thousands of fatalities are caused by rain and snow at night annually. Approximately 30% of drivers are stressed by glare causing hundreds of fatalities every year." (Ex. 3, Tamburo R. et al. (2014) at 1-2, emphasis added.)

125. According to AAA, vehicle headlamps are a primary safety system:

> Research data from the National Highway Traffic Safety Administration (NHTSA) reports **approximately 25 percent of automotive travel occurs at night. However, nearly 52 percent of all driver fatalities and 71 percent of all**

> **pedestrian deaths occur during dark driving times**. This data leads to the conclusion that driving in dark or low-light conditions increases the likelihood of a collision at least partially due to a combination of limited forward illumination by current automotive lighting systems and the speeds at which drivers travel. The efficacy of headlamps compliant with U.S. regulations may be a contributing factor. Research conducted by AAA determined that modern headlamps on low beam provide adequate lighting for speeds of only 39 mph to 52 mph, depending on the type of headlamp

(Ex. 8, AAA 2019 report at 3, emphasis added.)

> Researchers associated with Rensselaer Polytechnic Institute, in conjunction with the Transportation Lighting Alliance, published findings in 2014 concluding that the **application of ADB systems could reduce visibility-related nighttime crashes by six to seven percent compared to the visibility provided by low beam headlamp systems.** For this study, a visibility-related crash was assumed to be any nighttime incident involving pedestrians, cyclists, or wildlife in which no alcohol was found present in either the driver or victim. **The justification for using low beam headlamps as the baseline for visibility improvements is related to additional findings in which it was concluded that vehicle operators do not use their high beams in most driving conditions, whether due to oncoming traffic, preceding traffic or negligence. . .** Even after eliminating crashes in which alcohol was detected in the driver or pedestrian, there remained 25,000 instances of pedestrian death or injury as a result of being struck by a motor vehicle in dark lighting conditions. Applying the average economic and societal harm cost rates from the 2010 NHTSA study results in approximately $13.25 billion in damages annually. **If there were a six percent reduction in such crashes from universal adoption of ADB headlamp systems, nearly 1500 pedestrian deaths and injuries could be prevented, and the cost savings would be in excess of $861 million annually**.

(*Id.* at p. 53-54.)

126. Notably, as part of NHTSA's proposed rulemaking in 2018, NHTSA provided an extensive summary of why a long-felt unmet need exists for adaptive driving beam technology.

Excerpts of the NHTSA summary are reproduced below to establish that during the relevant 2002-2003 time period, a long-felt need existed for the glare-free adaptive beam technology [ADB] covered in the reexamination claims of the '551 Patent.

127. Based on the definitions of ADB in the NHTSA Proposed rulemaking, specifically the language boldfaced below, the reexamination claims constitute an Adaptive Driving Beam (ADB) system. The underlined quotes in the below excerpt, provide strong evidence that the ADB system claimed in claim 6 and claims 24-87 satisfies a long-felt but unmet need:

> While the benefits of improved visibility and the harmful effects of glare are difficult to quantify, they are real. For example, a recent study from the Insurance Institute for Highway Safety found that pedestrian deaths in dark conditions increased 56% from 2009 to 2016. The harmful effects of glare are highlighted by the thousands of consumer complaints NHTSA has received from the public over the years, Congressional interest, and the Agency's research. NHTSA received more than 5,000 comments in response to a 2001 Request for Comments on glare from headlamps and other frontal vehicle lamps. Most of these comments concerned nighttime glare. In 2005, Congress directed the Department of Transportation to study the risks of glare. In response to these concerns, NHTSA initiated a multipronged research program to study the risks of, and possible solutions to, glare. **ADB [Adaptive Driving Beam] systems are an advanced type of headlamp beam switching technology that provides increased illumination without increasing glare**. Headlamp beam switching were first introduced in the 1950s, and while not initially widely adopted, have more recently become widely offered as optional equipment. These traditional beam switching systems switch automatically from the upper beam to the lower beam when meeting other vehicles. **ADB systems improve on this technology. They utilize advanced equipment, including sensors (such as cameras), data processing software, and headlamp hardware (such as shutters or LED arrays). ADB systems detect oncoming and preceding vehicles and automatically adjust the headlamp beams to provide less light to the occupied roadway and more light to the unoccupied roadway.**

ADB technology enhances safety in two ways. First, it provides a variable, enhanced lower beam pattern that is sculpted to traffic on the road, rather than just one static lower beam pattern. It provides more illumination than existing lower beams without glaring other motorists (if operating correctly Second, it likely will lead to increased upper beam usage. Research has shown that most drivers under-utilize the upper beams. The effects of this increase as speeds increase, because at higher speeds the need for greater seeing distance increases. ADB technology (like traditional beam switching technology) enables the driver to activate the ADB system so that it is always in use and there is no need to switch between lower beams and upper beams. In this way, the upper beam will be more widely used, and used only when there are no other vehicles present. For both these reasons, ADB has the potential to reduce the risk of crashes by increasing visibility without increasing glare. In particular, it offers potentially significant safety benefits in avoiding collisions with pedestrians, cyclists, animals, and roadside objects.

"Background & Safety Need

ADB technology is an advanced type of semiautomatic headlamp beam switching technology. More rudimentary beam switching technology was first introduced in the 1950s and was limited simply to switching between upper and lower beams. **Adaptive driving beam technology is more advanced. It uses advanced sensors and computing technology that more accurately and precisely detect the presence and location of other vehicles and shape the headlamp beams to provide enhanced illumination of unoccupied portions of the road and avoid glaring other vehicles."**

"The Twin Safety Needs of Glare

Vehicle headlamps must satisfy two different safety needs: Visibility and glare prevention. Headlamps provide forward visibility (and also work in conjunction with parking lamps on passenger cars and other narrow vehicles to provide conspicuity). They also have the potential to glare other motorists and road users.

For this reason, headlighting systems include a lower beam and an upper beam. Lower beams (also referred to as passing beams or dipped beams) illuminate the road and its environs close ahead of the vehicle and are intended for use during low speed driving or when meeting or closely following another vehicle. Upper beams (also referred to as high beams, main beams, or driving beams) are intended primarily for distance illumination and for use when not meeting or closely following another vehicle. The lower beam pattern is designed to produce relatively high levels of light only in the close-in forward visibility region; the upper beam is designed to produce high light levels in close-in and longer distance regions. Thus, headlighting has traditionally entailed a trade-off between forward longer-distance visibility for the driver and glare to other road users.

Visibility and glare are both related to motor vehicle safety. Visibility has an obvious, intuitive relation to safety: The better a driver can see the road, the better he or she can react to road conditions and obstacles and avoid crashes. Although the qualitative connection to safety is intuitive, quantifying the effect of visibility on crash risk is difficult because of many confounding factors (for example, was the late-night crash because of diminished visibility or driver fatigue?). Glare, again intuitively, is related to safety because it degrades a driver's ability to see the forward roadway and any unexpected obstacles. Glare is a sensation caused by bright light in an observer's field of view. It reduces the ability to see and/or causes discomfort. Headlamp glare is the reduction in visibility and discomfort caused by viewing headlamps of oncoming or trailing vehicles (via the rearview or side mirrors).1 Empirical evidence suggests that headlamp glare degrades important aspects of driving performance, such as decreasing the distance at which an object in or near the roadway can be seen, increasing driver reaction times, and reducing the probability a driver will detect an object.2 It is difficult, however, to quantify the effect of glare on crash risk.

The potential problems associated with glare are highlighted by the thousands of complaints NHTSA has received from the public on the issue. The introduction of

halogen headlamp technology in the late 1970s and high intensity discharge and auxiliary headlamps in the 1990s was accompanied by a marked upswing in the number of glare complaints to NHTSA. In response to increased consumer complaints about glare in the late 1990s, NHTSA published a Request for Comments in 2001 on issues related to glare from headlamps, fog lamps, driving lamps, and auxiliary headlamps. NHTSA received more than 5,000 comments, most of which concerned nighttime glare from front mounted lamps."

(Ex. 4, NHTSA Proposed Rule 2018, at 2-5, emphasis added.)

128. Based on the above examples of industry praise, teaching away, and long felt but unmet need and their nexus to the claimed invention, I conclude that there is sufficient objective evidence during the relevant time frame and given the state of the industry at that time that the reexamination claims are not an obvious combination or modification of the prior art teachings of Stam PCT and Harbers.

XII. CONCLUSION

129. For the forgoing reasons, it is my opinion that the claims presented in the request for reexamination are patentable over the prior art. I further declare that all statements made herein are of my own knowledge and are true and that all statements made on information and belief are believed to be true and further that these statements were made with the knowledge that willful false statements and the like are punishable by fine or imprisonment or both pursuant to 18 U.S.C. §1001 and that willful false statements or the like may jeopardize the validity of the patent or any patent issuing thereon.

Signed in Chicago, IL on July 23, 2021.

Respectfully submitted,

Joseph S. Stam

Exhibit OTH-B

Joseph Stam *Curriculum Vitae*

Joseph S Stam

2238 Black Lake Ave. Holland MI 49424 Phone: 616.403.7592 E-mail: joestam@gmail.com

Highlights

- Highly experienced hardware engineer and performance software programmer.
- GPU computing master: Strong proficiency with NVIDIA CUDA and GPU optimization.
- CPU software performance computing expert, including AVX/SSE.
- Extensive experience with custom circuit design, operation and manufacturing.
- Experienced manager of technical staff.
- Successful product innovator: Designed award winning automotive vision systems which have shipped millions of units.
- Prolific inventor with numerous patents.
- Enthusiastic presenter and trainer, comfortable with large audiences and prestigious venues.
- Language Experience includes: C, C++, CUDA, R, x86 assembly (SSE/AVX) on Linux and Windows server and supercomputing platforms.

Experience

Jump Trading 2012-Present

- Senior front office trading team member with diverse responsibilities developing low latency trading algorithms and high-performance computing applications. Duties range from software optimization for high speed trading, computational data analytics, analysis of financial market data and feeds, trading infrastructure design, and vendor relationship building.

NVIDIA Corporation, 2007-2012; Principal Computer Vision Architect

- Crafted and implemented NVIDIA's early strategy for computer vision on GPUs, a key technology area which heavily leverages NVIDIA's strong computation advantages over competitors.
- Built and led a team of computer vision scientists to develop algorithms and optimize for NVIDIA hardware.
- Managed development of NVIDIA's optimized implementation of OpenCV on both discrete GPUs and mobile processors, including oversight of large external developer contract.
- Expert in GPU computing with NVIDIA CUDA. Emphasis on pattern recognition, computer vision, imaging and video processing.
- Provide extensive application development support to 3rd party developers, including optimization of production software (e.g. Adobe Premiere Pro CS5).
- Evangelize NVIDIA CUDA at many conferences, universities, and corporations.
- Author of technical whitepapers and "Image Demosaicing" chapter in GPU Computing Gems (published 2011).
- Worked in embedded, automotive and professional business units.

Hope College, Part-Time Engineering Instructor; 2009-2010

- Substitute part-time instructor for introductory undergraduate engineering and electronics labs.

Gentex Corporation, Senior Research Scientist; 1996-2007

- Chief engineer for research, development and production for Gentex's *SmartBeam*™ automatic highbeam headlamp control product. Uses a CMOS camera and proprietary algorithms to detect and respond to traffic. A miniature neural network computer vision system, likely the first volume production use of computer vision AI in automobiles.
- Sold millions of units to date, awarded Popular Science's 2005 *Best of What's New* award, and Automotive News *Pace* award.
- Lead designer of electronics hardware and software algorithms.
- Managed design of several generations of high sensitivity and high dynamic range custom CMOS image sensors and control ASICs.
- Designed camera optics and optical assembly methods.
- Developed proprietary pattern recognition algorithms, extensive experience with neural networks and statistical regression techniques.
- Created a unique, very low-latency pipeline for rapid image acquisition, analysis, and interface with vehicle network.
- Managed a strategic alliance and investment with Photobit Corporation, a pioneering company formed by the NASA scientists who invented the CMOS image sensor. Ancestor to Aptina Imaging, Micron, and now On Semiconductor, a current world-leading image sensor company.
- Instrumental in creating a complete microelectronics production competency for wafer-level sensor testing through image sensor package assembly.
- Actively involved in intellectual property issues including patent prosecution, litigation, licensing and overall IP strategy.

Intellectual Property

- Inventor on 95 issued US patents and numerous foreign patents.
- Inventions include: Image sensor technologies, computer architecture, computer vision and image processing algorithms, headlamp control systems, optical systems, image sensor packaging, LED lighting, light sensors, and many others.
- Regularly drafted my own patent specifications and claims.
- Deeply involved in overall corporate IP strategy, including competitive portfolio analysis.
- Experienced at prior art searching and design-around.
- Participated in many in-person USPTO examiner reviews.
- Subject of US patent interference, heavily involved in all proceedings.

Education

Hope College, Holland MI, B.S. 1996. Majors: Engineering Physics, Computer Science. GPA 3.6/4.0 overall, 3.9/4.0 major

Michigan State University, East Lansing MI, M.S. Electrical Engineering 2001 (completed while employed at Gentex). Emphasis in Solid State Electronic Devices, elective coursework in optics and image processing. GPA: 3.8/4.0

Military

Michigan Army National Guard 1991-1997. Served as an Infantryman and achieved rank Sergeant E5

Exhibit OTH-C
New Claims

WHAT IS CLAIMED IS:

24. (New) An illuminating device having automatic control of light provided to an illuminated area comprising:

a structure for incorporating illuminating device elements, wherein the structure comprises a motor vehicle;

a plurality of individually controllable LEDs incorporated in the structure via at least one headlamp mounted to the structure, each headlamp including at least one of the LEDs, the LEDs in communication with a power source;

electronic circuitry apparatus for the controlled powering of the LEDs and other of the illuminating device elements;

one or more processors;

one or more sensors, including one or more cameras, placed on the structure for detecting coordinate-specific information about the illuminated area, at least one of said cameras in communication with power, and in communication with at least one of the one or more processors;

a controller, including at least one of the one or more processors, integrated with the structure via mounting, in communication with the LED controlling power electronic circuitry apparatus, said controller arranged to process the information communicated from the cameras and to automatically control the light provided to the illuminated area; and

memory storing instructions that, when executed by one or more processors of the controller, enable the controller to:

determine first coordinates corresponding to an other vehicle, based on the coordinate-specific information;

select a cluster of the LEDs that emit light toward at least a portion of the other vehicle based on the LEDs having emission aimings associated with the first coordinates; and

change emission of the selected cluster of LEDs relative to emission of other LEDs not included in the cluster to create headlamp illumination that preserves a first level of illumination illuminating past the other vehicle while preventing glare to a driver of the other vehicle.

25. (New) The illuminating device of claim 24, wherein:

the changed emission includes a change to at least one of intensity or color or a change of at least one LED of the cluster to a non-emitting state; and

the cluster includes a plurality of the LEDs and the cluster includes non-contiguous LEDs.

26. (New) The illuminating device of claim 24, wherein the memory further stores instructions that, when executed by one or more processors of the controller, enable the controller to:

identify an upcoming road curvature along a road on which the motor vehicle is traveling; and

accommodate the upcoming road curvature by adaptation of a light pattern of at least one of the at least one headlamps.

27. (New) The illuminating device of claim 26, wherein:

the changed emission includes a change to at least one of intensity or color or a change of at least one LED of the cluster to a non-emitting state;

the cluster includes a plurality of the LEDs and the cluster includes non-contiguous LEDs; and

the memory further stores instructions that, when executed by one or more processors of the controller, enable the controller to accommodate the road curvature by changing illumination in at least a direction of the road curvature by adaptation of the light pattern in at least one of color, intensity or spatial distribution by modification of light associated with one or more of the LEDs.

28. (New) The illuminating device of claim 26, wherein the identification of the upcoming road curvature is based at least in part on map data and wherein the adaptation of the light pattern is based at least in part on the map data.

29. (New) The illuminating device of claim 26, wherein the identification of the upcoming road curvature is based at least in part on sensor data provided by one or more of the sensors of the vehicle and wherein the adaptation of the light pattern is based at least in part on the sensor data.

30. (New) The illuminating device of claim 24, further including one or more optical control elements to control light emitted from one or more of the LEDs.

31. (New) The illuminating device of claim 30, wherein the optical control elements include at least one of one or more reflectors, refractors or lenses.

32. (New) An illuminating device having automatic control of light provided to an illuminated area comprising:

a structure for incorporating illuminating device elements, wherein the structure comprises a motor vehicle;

a plurality of individually controllable LEDs incorporated in the structure via at least one headlamp mounted to the structure, each headlamp including at least one of the LEDs, the LEDs in communication with a power source;

electronic circuitry apparatus for the controlled powering of the LEDs and other of the illuminating device elements;

one or more processors;

one or more sensors, including one or more cameras, placed on the structure for detecting coordinate-specific information about the illuminated area and positioned to capture an image of at least one target, at least one of said cameras in communication with power, and in communication with at least one of the one or more processors;

a controller, including at least one of the one or more processors, integrated with the structure via mounting, in communication with the LED controlling power electronic circuitry apparatus, said controller arranged to process the information communicated from the cameras and to automatically control the light provided to the illuminated area; and

memory storing instructions that, when executed by one or more processors of the controller, enable the controller to:

create a beam of diminished illumination illuminating at least a portion of the at least one target with non-glaring illumination, created within a broader field of illumination having different intensity than the beam, by one or more changes to characteristics of first light of a cluster of the LEDs providing the first light directed at the at least a portion and creating the beam, the beam diminished in intensity relative to the broader field of illumination illuminating at least above and on both sides of the beam; and

follow, based at least in part on data from one or more of the cameras, the at least one target with the diminished illumination as the at least one target changes location relative to the motor vehicle.

33. (New) The illuminating device of claim 32 wherein:

the memory further stores instructions that, when executed by one or more processors of the controller, enable the controller to select the cluster of LEDs based at least in part on known aimings of the first light associated with the first cluster having a correlation to the at least the portion, the known aimings based at least in part on at least one of known directionality of light emitted by the first cluster or known directionality of light emitted by the first cluster exiting the headlamp;

the data includes image data;

the one or more changes to characteristics of the first light include a change to at least one of intensity or color or a change of at least one LED of the cluster to a non-emitting state; and

the cluster includes a plurality of the LEDs and the cluster includes non-contiguous LEDs.

34. (New) The illuminating device of claim 32, wherein the memory further stores instructions that, when executed by one or more processors of the controller, enable the controller to:

identify an upcoming road curvature along a road on which the motor vehicle is traveling; and

accommodate the upcoming road curvature by adaptation of a light pattern of at least one of the at least one headlamps.

35. (New) The illuminating device of claim 34, wherein:

the one or more changes to characteristics of the first light include a change to at least one of intensity or color or a change of at least one LED of the cluster to a non-emitting state;

the cluster includes a plurality of the LEDs and the cluster includes non-contiguous LEDs;

the memory further stores instructions that, when executed by one or more processors of the controller, enable the controller to select the cluster of LEDs based at least in part on known aimings of the first light associated with the first cluster having a correlation to the at least the portion, the known aimings based at least in part on at least one of known directionality of light emitted by the first cluster or known directionality of light emitted by the first cluster exiting the headlamp; and

the memory further stores instructions that, when executed by one or more processors of the controller, enable the controller to accommodate the road curvature by changing illumination in at least a direction of the road curvature by adaptation of the light pattern in at least one of color, intensity or spatial distribution by modification of light associated with one or more of the LEDs.

36. (New) The illuminating device of claim 34, wherein the identification of the upcoming road curvature is based at least in part on map data and wherein the adaptation of the light pattern is based at least in part on the map data.

37. (New) The illuminating device of claim 34, wherein the identification of the upcoming road curvature is based at least in part on sensor data provided by one or more of the sensors of the vehicle and wherein the adaptation of the light pattern is based at least in part on the sensor data.

38. (New) The illuminating device of claim 32, further including one or more optical control elements to control light emitted from one or more of the LEDs.

39. (New) The illuminating device of claim 38, wherein the optical control elements include at least one of one or more reflectors, refractors or lenses.

40. (New) An illuminating device having automatic control of light provided to an illuminated area comprising:

a structure for incorporating illuminating device elements, wherein the structure comprises a motor vehicle;

a plurality of individually controllable LEDs incorporated in the structure via at least one headlamp mounted to the structure, each headlamp including at least one of the LEDs, the LEDs in communication with a power source;

electronic circuitry apparatus for the controlled powering of the LEDs and other of the illuminating device elements;

one or more processors;

one or more sensors, including one or more cameras, placed on the structure for detecting coordinate-specific information about the illuminated area and positioned to capture an image of at least two other vehicles, at least one of said cameras in communication with power, and in communication with at least one of the one or more processors;

a controller, including at least one of the one or more processors, integrated with the structure via mounting, in communication with the LED controlling power electronic circuitry apparatus, said controller arranged to process the information communicated from the cameras and to automatically control the light provided to the illuminated area; and

memory storing instructions that, when executed by one or more processors of the controller, enable the controller to:

determine a first cluster of the LEDs illuminating at least a first portion of a first other vehicle based at least in part on data from one or more of the sensors indicating a first position associated with the first other vehicle;

diminish glaring illumination of the first other vehicle by a first change to one or more characteristics of first light of at least the first cluster;

determine a second, different cluster of the LEDs illuminating at least a second portion of a second other vehicle based at least in part on the data indicating a second position associated with the second other vehicle;

diminish glaring illumination of the second other vehicle by a second change to one or more characteristics of second light of at least the second, different cluster;

wherein the first and second changes decrease intensity of first emission from the first cluster and second emission from the second cluster relative to a third emission, from the at least one headlamp, illuminating an area between the first and second portion.

41. (New) The illuminating device of claim 40, wherein:

the data includes image data;

at least one of the first or second change to characteristics of light associated with at least one of the first or second cluster of LEDs includes at least one of a change to color, to intensity, or a change of at least one LED of the respective cluster to a non-emitting state;

at least one of the first cluster or the second cluster includes a plurality of the LEDs and at least one of the first cluster or the second cluster includes non-contiguous LEDs;

the determination of the first cluster includes selection of the first cluster based at least in part on known aimings of light associated with the first cluster having a correlation to the first position, the known aimings based at least in part on at least one of known directionality of light emitted by the first cluster or known directionality of light emitted by the first cluster exiting the headlamp; and

the determination of the second cluster includes selection of the second cluster based at least in part on known aimings of light associated with the second cluster having a correlation to the second position, the known aimings based at least in part on at least one of known directionality of light emitted by the second cluster or known directionality of light emitted by the second cluster exiting the headlamp.

42. (New) The illuminating device of claim 40, wherein the memory further stores instructions that, when executed by one or more processors of the controller, enable the controller to:

identify an upcoming road curvature along a road on which the motor vehicle is traveling; and

accommodate the upcoming road curvature by adaptation of a light pattern of at least one of the at least one headlamps.

43. (New) The illuminating device of claim 42, wherein:

at least one of the first or second change to characteristics of light associated with at least one of the first or second cluster of LEDs includes at least one of a change to color, to intensity, or a change of at least one LED of the respective cluster to a non-emitting state;

at least one of the first cluster or the second cluster includes a plurality of the LEDs and at least one of the first cluster or the second cluster includes non-contiguous LEDs;

the determination of the first cluster includes selection of the first cluster based at least in part on known aimings of light associated with the first cluster having a correlation to the first position, the known aimings based at least in part on at least one of known directionality of light emitted by the first cluster or known directionality of light emitted by the first cluster exiting the headlamp;

the determination of the second cluster includes selection of the second cluster based at least in part on known aimings of light associated with the second cluster having a correlation to the second position, the known aimings based at least in part on at least one of known directionality of light emitted by the second cluster or known directionality of light emitted by the second cluster exiting the headlamp; and

the memory further stores instructions that, when executed by one or more processors of the controller, enable the controller to accommodate the road curvature by changing illumination in at least a direction of the road curvature by adaptation of the light pattern in at least one of color, intensity or spatial distribution by modification of light associated with one or more of the LEDs.

44. (New) The illuminating device of claim 42, wherein the identification of the upcoming road curvature is based at least in part on map data and wherein the adaptation of the light pattern is based at least in part on the map data.

45. (New) The illuminating device of claim 42, wherein the identification of the upcoming road curvature is based at least in part on sensor data provided by one or more of the sensors of the vehicle and wherein the adaptation of the light pattern is based at least in part on the sensor data.

46. (New) The illuminating device of claim 40, further including one or more optical control elements to control light emitted from one or more of the LEDs.

47. (New) The illuminating device of claim 46, wherein the optical control elements include at least one of one or more reflectors, refractors or lenses.

48. (New) An illuminating device having automatic control of light provided to an illuminated area comprising:

a structure for incorporating illuminating device elements, wherein the structure comprises a motor vehicle;

a plurality of individually controllable LEDs incorporated in the structure via at least one headlamp mounted to the structure, each headlamp including at least one of the LEDs, the LEDs in communication with a power source;

electronic circuitry apparatus for the controlled powering of the LEDs and other of the illuminating device elements;

one or more processors;

one or more sensors, including one or more cameras, placed on the structure for detecting coordinate-specific information about the illuminated area, at least one of said cameras in communication with power, and in communication with at least one of the one or more processors;

a controller, including at least one of the one or more processors, integrated with the structure via mounting, in communication with the LED controlling power electronic circuitry apparatus, said controller arranged to process the information, communicated from the cameras and to automatically control the light provided to the illuminated area; and

memory storing instructions that, when executed by one or more processors of the controller, enable the controller to:

illuminate a portion of at least one object, indicated by data from at least one of the one or more sensors, by selecting a first cluster of the LEDs to emit first light directed towards a first area including the at least the portion of at least one object, the first area determined based at least in part on the data, the first cluster selected based at least in part on known aimings of light associated with the first cluster determined to correspond to the first area, and the first light determined based at least in part on classifying the object based at least in part on the data; andcontrol light emitted from the first cluster directed towards the

first area to be different in at least one emission characteristic, based on the first light determination, from second light emitted from a second, different cluster of the LEDs, directed towards one or more illuminated second areas at a common elevation with the first area and laterally adjacent to the first area.

49. (New) The illuminating device of claim 48, wherein:

the data includes image data;

the memory further stores instructions that, when executed by one or more processors of the controller, enable the controller to illuminate the at least the portion with light below at least a predefined glare level;

the at least one object includes at least one of a pedestrian, a sign, or another vehicle;

at least one of the first cluster or the second cluster includes a plurality of the LEDs and at least one of the first cluster or the second cluster includes non-contiguous LEDs;

the control of the light emitted from the first cluster includes a change of at least one LED of the cluster to a non-emitting state;

the at least one emission characteristic is different following modification by an optical control element; and

the known aimings of light associated with the first cluster is based at least on part on known directionality of light emitted by LEDs of the first cluster exiting from the at least one headlamp.

50. (New) The illuminating device of claim 48, wherein the memory further stores instructions that, when executed by one or more processors of the controller, enable the controller to:

identify an upcoming road curvature along a road on which the motor vehicle is traveling; and

accommodate the upcoming road curvature by adaptation of a light pattern of at least one of the headlamps.

51. (New) The illuminating device of claim 50, wherein:

the memory further stores instructions that, when executed by one or more processors of the controller, enable the controller to illuminate the at least the portion with light below at least a predefined glare level;

the at least one object includes at least one of a pedestrian, a sign, or another vehicle;

at least one of the first cluster or the second cluster includes a plurality of the LEDs and at least one of the first cluster or the second cluster includes non-contiguous LEDs;

the control of the light emitted from the first cluster includes a change of at least one LED of the cluster to a non-emitting state;

the at least one emission characteristic is different following modification by an optical control element;

the known aimings of light associated with the first cluster is based at least on part on known directionality of light emitted by LEDs of the first cluster exiting from the at least one headlamp; and

the memory further stores instructions that, when executed by one or more processors of the controller, enable the controller to accommodate the road curvature by changing illumination in at least a direction of the road curvature by adaptation of the light pattern in at least one of color, intensity or spatial distribution by modification of light associated with one or more of the LEDs.

52. (New) The illuminating device of claim 50, wherein the identification of the upcoming road curvature is based at least in part on map data and wherein the adaptation of the light pattern is based at least in part on the map data.

53. (New) The illuminating device of claim 50, wherein the identification of the upcoming road curvature is based at least in part on sensor data provided by one or more of the sensors of the vehicle and wherein the adaptation of the light pattern is based at least in part on the sensor data.

54. (New) The illuminating device of claim 48, further including one or more optical control elements to control light emitted from one or more of the LEDs.

55. (New) The illuminating device of claim 54, wherein the optical control elements include at least one of one or more reflectors, refractors or lenses.

56. (New) An illuminating device having automatic control of light provided to an illuminated area comprising:

a structure for incorporating illuminating device elements, wherein the structure comprises a motor vehicle;

a plurality of individually controllable LEDs incorporated in the structure via at least one headlamp mounted to the structure, each headlamp including at least one of the LEDs, the LEDs in communication with a power source;

electronic circuitry apparatus for the controlled powering of the LEDs and other of the illuminating device elements;

one or more processors;

one or more sensors, including one or more cameras, placed on the structure for detecting coordinate-specific information about the illuminated area and positioned to capture an image of at least one other vehicle ahead of the motor vehicle, at least one of said cameras in communication with power, and in communication with at least one of the one or more processors;

a controller, including at least one of the one or more processors, integrated with the structure via mounting, in communication with the LED controlling power electronic circuitry apparatus, said controller arranged to process the information communicated from the cameras and to automatically control the light provided to the illuminated area; and

memory storing instructions that, when executed by one or more processors of the controller, enable the controller to:

determine, based on data from one or more of the sensors, a vertical and horizontal position associated with the at least one other vehicle;

select a first cluster of the LEDs based at least in part on at least one of the vertical and horizontal position compared to known aimings of light associated with the first cluster; and

reduce intensity of illumination to non-glaring illumination of a first area associated with the at least one other vehicle, relative to intensity of illumination on both sides of the

first area at elevations common with the first area illuminated by a second cluster of the LEDs, by control of emission from the first cluster.

57. (New) The illuminating device of claim 56, wherein:

the data includes image data,

the control of emission of the first cluster includes a change of at least one of color or intensity or control of at least one LED of the first cluster into a non-emitting state;

at least one of the first cluster or the second cluster includes a plurality of the LEDs and at least one of the first cluster or the second cluster includes non-contiguous LEDs; and

the known light aimings associated with the first cluster is based at least on part on known directionality of light emitted by LEDs of the first cluster exiting from the at least one headlamp.

58. (New) The illuminating device of claim 56 wherein the memory further stores instructions that, when executed by one or more processors of the controller, enable the controller to:

identify an upcoming road curvature along a road on which the motor vehicle is traveling; and

accommodate the upcoming road curvature by adaptation of a light pattern of at least one of the headlamps.

59. (New) The illuminating device of claim 58, wherein:

the control of emission of the first cluster includes a change of at least one of color or intensity or control of at least one LED of the first cluster into a non-emitting state;

at least one of the first cluster or the second cluster includes a plurality of the LEDs and at least one of the first cluster or the second cluster includes non-contiguous LEDs;

the known light aimings associated with the first cluster is based at least on part on known directionality of light emitted by LEDs of the first cluster exiting from the at least one headlamp; and

the memory further stores instructions that, when executed by one or more processors of the controller, enable the controller to accommodate the road curvature by changing illumination in at least a direction of the road curvature by adaptation of the light pattern in at least one of color, intensity or spatial distribution by modification of light associated with one or more of the LEDs.

60. (New) The illuminating device of claim 58, wherein the identification of the upcoming road curvature is based at least in part on map data and wherein the adaptation of the light pattern is based at least in part on the map data.

61. (New) The illuminating device of claim 58, wherein the identification of the upcoming road curvature is based at least in part on sensor data provided by one or more of the sensors of the vehicle and wherein the adaptation of the light pattern is based at least in part on the sensor data.

62. (New) The illuminating device of claim 56, further including one or more optical control elements to control light emitted from one or more of the LEDs.

63. (New) The illuminating device of claim 62, wherein the optical control elements include at least one of one or more reflectors, refractors or lenses.

64. (New) An illuminating device having automatic control of light provided to an illuminated area comprising:

a structure for incorporating illuminating device elements, wherein the structure comprises a motor vehicle;

a plurality of individually controllable LEDs incorporated in the structure via at least one headlamp mounted to the structure, each headlamp including at least one of the LEDs and in communication with a power source;

electronic circuitry apparatus for the controlled powering of the LEDs and other of the illuminating device elements;

one or more processors;

one or more sensors, including one or more cameras, placed on the structure for detecting coordinate-specific information about the illuminated area and positioned to capture an image of another vehicle, at least one of said cameras in communication with power, and in communication with at least one of the one or more processors;

a controller, including at least one of the one or more processors, integrated with the structure via mounting, in communication with the LED controlling power electronic circuitry apparatus, said controller arranged to process the information communicated from the cameras and to automatically control the light provided to the illuminated area; and

memory storing instructions that, when executed by one or more processors of the controller, enable the controller to:

select a first cluster of the LEDs having light associated therewith that is directed towards the other vehicle based at least in part on first data from one or more of the sensors indicating a first position associated with the other vehicle;

control a first change to one or more characteristics of the light associated with the first cluster of the LEDs that is directed towards the other vehicle, that diminishes glare to a driver of the other vehicle when the other vehicle is at the first position;

select a second, different cluster of the LEDs having light associated therewith that is directed towards the other vehicle based at least in part on second, subsequent data from one or more of the sensors indicating a second, subsequent position associated with the other vehicle; and

control a second, subsequent change, to one or more characteristics of the light that is subsequently directed towards the other vehicle, that diminishes glare to the driver of the other vehicle when the other vehicle is at the second position.

65. (New) The illuminating device of claim 64, wherein:

the first data or second data includes image data;

at least one of the first or second change to characteristics of light associated with at least one of the first or second cluster of LEDs includes at least one of a change to color, to intensity, or a change of at least one LED of the respective cluster to a non-emitting state;

at least one of the first cluster or the second cluster includes a plurality of the LEDs and at least one of the first cluster or the second cluster includes non-contiguous LEDs; and

the light that is directed or subsequently directed towards the other vehicle is determined based at least in part on known directionality of light emitted by the respective first or second cluster exiting the at least one headlamp.

66. (New) The illuminating device of claim 64, wherein the memory further stores instructions that, when executed by one or more processors of the controller, enable the controller to:

identify an upcoming road curvature along a road on which the motor vehicle is traveling; and

accommodate the upcoming road curvature by adaptation of a light pattern of at least one of the headlamps.

67. (New) The illuminating device of claim 66, wherein:

at least one of the first or second change to characteristics of light associated with at least one of the first or second cluster of LEDs includes at least one of a change to color, to intensity, or a change of at least one LED of the respective cluster to a non-emitting state;

at least one of the first cluster or the second cluster includes a plurality of the LEDs and at least one of the first cluster or the second cluster includes non-contiguous LEDs;

the light that is directed or subsequently directed towards the other vehicle is determined based at least in part on known directionality of light emitted by the respective first or second cluster exiting the at least one headlamp; and

the memory further stores instructions that, when executed by one or more processors of the controller, enable the controller to accommodate the road curvature by changing illumination in at least a direction of the road curvature by adaptation of the light pattern in at least one of color, intensity or spatial distribution by modification of light associated with one or more of the LEDs.

68. (New) The illuminating device of claim 66, wherein the identification of the upcoming road curvature is based at least in part on map data and wherein the adaptation of the light pattern is based at least in part on the map data.

69. (New) The illuminating device of claim 66, wherein the identification of the upcoming road curvature is based at least in part on sensor data provided by one or more of the sensors of the vehicle and wherein the adaptation of the light pattern is based at least in part on the sensor data.

70. (New) The illuminating device of claim 64, further including one or more optical control elements to control light emitted from one or more of the LEDs.

71. (New) The illuminating device of claim 70, wherein the optical control elements include at least one of one or more reflectors, refractors or lenses.

72. (New) An illuminating device having automatic control of the light provided to an illuminated area comprising:

a structure for incorporating illuminating device elements, wherein the structure comprises a motor vehicle;

a plurality of individually controllable LEDs incorporated in the structure via at least one headlamp mounted to the structure, each headlamp including at least one of the LEDs, the LEDs in communication with a power source;

electronic circuitry apparatus for the controlled powering of the LEDs and other elements of the illuminating device elements;

one or more processors;

one or more sensors, including one or more cameras, placed on the structure for detecting coordinate-specific information about the illuminated area, at least one of said cameras in communication with power, and in communication with at least one of the one or more processors;

a controller, including at least one of the one or more processors, integrated with the structure via mounting, in communication with the LED controlling power electronic circuitry apparatus, said controller arranged to process the information communicated from the cameras and to automatically control the light provided to the illuminated area; and

memory storing instructions that, when executed by one or more processors of the controller, enable the controller to:

determine a target based on first data from one or more of the sensors;

determine a first target location based on the first data;

select a cluster of the LEDs having light associated therewith that is directed at the target, determined based on the first target location;

vary illumination provided to the target by the selected cluster, relative to illumination provided to areas laterally adjacent to the target and provided by at least one LED different from LEDs in the selected cluster; and

maintain a variance of illumination provided to the target relative to the laterally adjacent areas, when subsequent data from one or more of the cameras indicates a change in position of the target relative to the motor vehicle, by repeating the determination of target location, selection of the cluster and variance to illumination provided to the target, relative to the laterally adjacent areas, based on the subsequent data.

73. (New) The illuminating device of claim 72, wherein:

the variation of illumination provided to the target includes variation in at least one of color or intensity or at least a change of at least one LED of the selected cluster to a non-emitting state;

the cluster includes a plurality of the LEDs and the cluster includes non-contiguous LEDs;

the light directed at the target is determined based at least in part on known directionality of light emitted by the first cluster exiting from the at least one headlamp; and

at least one of the first data or the subsequent data includes image data.

74. (New) The illuminating device of claim 72, wherein the memory further stores instructions that, when executed by one or more processors of the controller, enable the controller to:

identify an upcoming road curvature along a road on which the motor vehicle is traveling; and

accommodate the upcoming road curvature by adaptation of a light pattern of at least one of the headlamps.

75. (New) The illuminating device of claim 74, wherein:

the variation of illumination provided to the target includes variation in at least one of color or intensity or at least a change of at least one LED of the selected cluster to a non-emitting state;

the selected cluster includes a plurality of the LEDs and the selected cluster includes non-contiguous LEDs;

the light directed at the target is determined based at least in part on known directionality of light emitted by the first cluster exiting from the at least one headlamp; and

the memory further stores instructions that, when executed by one or more processors of the controller, enable the controller to accommodate the road curvature by changing illumination in at least a direction of the road curvature by adaptation of the light pattern in at least one of color, intensity or spatial distribution by modification of light associated with one or more of the LEDs.

76. (New) The illuminating device of claim 74, wherein the identification of the upcoming road curvature is based at least in part on map data and wherein the adaptation of the light pattern is based at least in part on the map data.

77. (New) The illuminating device of claim 74, wherein the identification of the upcoming road curvature is based at least in part on sensor data provided by one or more of the sensors of the vehicle and wherein the adaptation of the light pattern is based at least in part on the sensor data.

78. (New) The illuminating device of claim 72, further including one or more optical control elements to control light emitted from one or more of the LEDs.

79. (New) The illuminating device of claim 78 wherein the optical control elements include at least one of one or more reflectors, refractors or lenses.

80. (New) An illuminating device having automatic control of light provided to an illuminated area comprising:

a structure for incorporating illuminating device elements, wherein the structure comprises a motor vehicle;

a plurality of individually controllable LEDs incorporated in the structure via at least one headlamp mounted to the structure, each headlamp including at least one of the LEDs, the LEDs in communication with a power source;

electronic circuitry apparatus for the controlled powering of the LEDs and other of the illuminating device elements;

one or more processors;

one or more sensors, including one or more cameras, placed on the structure for detecting coordinate-specific information about the illuminated area and positioned to capture camera data indicating a target ahead of the motor vehicle, at least one of said cameras in communication with power, and in communication with at least one of the one or more processors;

a controller, including at least one of the one or more processors, integrated with the structure via mounting, in communication with the LED controlling power electronic circuitry apparatus, said controller arranged to process the information communicated from the cameras and to automatically control the light provided to the illuminated area; and

memory storing instructions that, when executed by one or more processors of the controller, enable the controller to:

identify, based on data received from one or more of the sensors, a plurality of positions associated with the target as the target moves relative to the motor vehicle; and

change, responsive to the positions associated with the target, first light associated with one or more LEDs aimed toward at least a portion of the target, relative to second light associated with other one or more of the LEDs aimed laterally adjacent the target on either side, as the target moves relative to the motor vehicle.

81. (New) The illuminating device of claim 80, wherein:

the data includes image data;

the memory further stores instructions that, when executed by one or more processors of the controller, enable the controller to select a first cluster of LEDs, associated with the first light, for the change, based at least in part on known aimings of the first light associated with the first cluster having a correlation to the at least the portion, the known aimings based at least in part on at least one of known directionality of light emitted by the first cluster or known directionality of light emitted by the first cluster exiting the headlamp; and

the change to emission of the one or more LEDs aimed towards the at least the portion includes a change to intensity or color or a change of at least one of the LEDs to a non-emitting state.

82. (New) The illuminating device of claim 80, wherein the memory further stores instructions that, when executed by one or more processors of the controller, enable the controller to:

identify an upcoming road curvature along a road on which the motor vehicle is traveling; and

accommodate the upcoming road curvature by adaptation of a light pattern of at least one of the at least one headlamps.

83. (New) The illuminating device of claim 82, wherein:

the change to emission of the one or more LEDs aimed towards the at least the portion includes a change to intensity or color or a change of at least one of the LEDs to a non-emitting state;

the memory further stores instructions that, when executed by one or more processors of the controller, enable the controller to select a first cluster of LEDs, associated with the first light, for the change, based at least in part on known aimings of the first light associated with the first cluster having a correlation to the at least the portion, the known aimings based at least in part on at least one of known directionality of light emitted by the first cluster or known directionality of light emitted by the first cluster exiting the headlamp; and

the memory further stores instructions that, when executed by one or more processors of the controller, enable the controller to accommodate the road curvature by changing illumination in at least a direction of the road curvature by adaptation of the light pattern in at least one of color, intensity or spatial distribution by modification of light associated with one or more of the LEDs.

84. (New) The illuminating device of claim 82, wherein the identification of the upcoming road curvature is based at least in part on map data and wherein the adaptation of the light pattern is based at least in part on the map data.

85. (New) The illuminating device of claim 82, wherein the identification of the upcoming road curvature is based at least in part on sensor data provided by one or more of the sensors of the vehicle and wherein the adaptation of the light pattern is based at least in part on the sensor data.

86. (New) The illuminating device of claim 80, further including one or more optical control elements to control light emitted from one or more of the LEDs.

87. (New) The illuminating device of claim 86, wherein the optical control elements include at least one of one or more reflectors, refractors or lenses.

Exhibit OTH-D

Support for New Claims

Support for New Claims for '551 Patent

Representative support for the new claims may be found at least in the following sections and Figures of the '551 Patent:

Proposed Claim	**Support from '551 Patent**
24. (New) An illuminating device having automatic control of light provided to an illuminated area comprising:	**Claim 6 of the '551 Patent**
a structure for incorporating illuminating device elements, wherein the structure comprises a motor vehicle;	**Claim 6 of the '551 Patent** **Fig. 15 (bottom):** 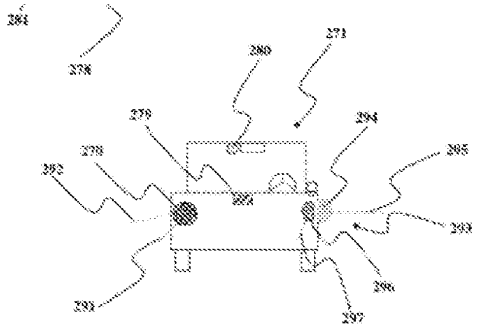 **53:45-54:47** Thus when following another vehicle, assuming, as drivers have reported, that they find yellow incandescent colored headlamps less offending than the HID blue-white color, the external controller **279** which receives traffic data from sensors **280** … a

	cluster **281** would be used to illuminate around a corner. Thus when the turn indicator has been selected or the steering wheel has been rotated by the driver, the DLF headlamp is powered by the controller to illuminate sideways at angles which according to the speed of travel is correct. (A driver can't make a 90-degree turn traveling 90 kph but from a stop, the turn may be around a corner.) In a preferred embodiment a multitude of LEDs in **281** are differently aimed in top view **274** showing the top view of the cluster **282** with SLS **283** angled less outwards and SLS **284** angled more outward with the forward aiming (distance ahead of the vehicle) of the more angled SLS **284**, closer in for illuminating sharp turn, than that of the less angled SLS **283** for a shallow curve. Side sectional view **273** shows a general downward aiming with SLSs of front view **272** cluster **285** corresponding to cluster **286** shown from the side. The cluster **286** is the most angled downward such as for a slow driving as in a parking light type of application where the idea is not to cause glare yet be seen. The parking light function can also be done with higher angled LEDs by just lowering the intensity to very low non-glaring intensities. Cluster **287** of the front view would be the main illuminating workhorse and is shown in side view **273** as angled SLSs in cluster **288** and top view **274** as cluster **289**. The top cluster **276** shown in side view **273**, as **290** would perform alone or in tandem with part of **287** the high beam lighting function… In one embodiment the digital headlamp carries out all the functions in a single unit **270**. SLSs have different locations and aimings **291** and **292** to carry out the functions. In another embodiment **293** the spotlight sign illuminating function or corner lighting function is in a separate package **294** with its aiming **295**.

	The low and high beam lighting is accomplished with fixture **296** and its general aiming **297**. The separate units may be dictated by design or sales considerations and yield more flexibility but are within the scope of the overall integral digital lamp headlight device. The controller **279** will addresses the power supply of each DLF headlamp **270**, **296** and **294** independently such that each lamp performs its functions separately.
a plurality of individually controllable LEDs incorporated in the structure via at least one headlamp mounted to the structure, each headlamp including at least one of the LEDs, the LEDs in communication with a power source;	**Claim 6 of the '551 patent** **Fig. 15 (top):** 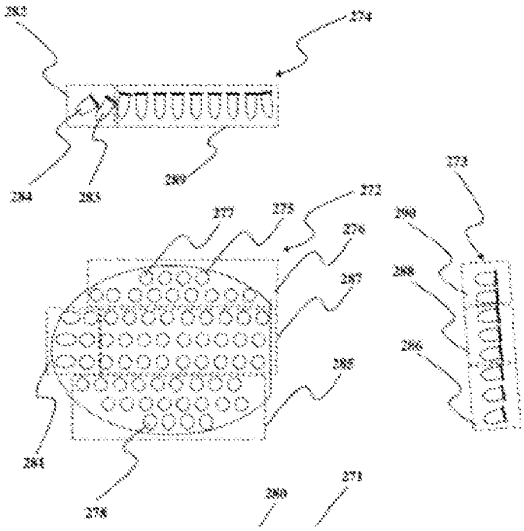 **53:13-37** In FIG. 16 a headlamp **270** of a land, sea or air vehicle **271** is shown in front view **272**, side view of a section **273** and top view of a section **274**. A discreet SLS light source such as an LED **275** with specific location within the cluster **276** has a specific spatial light

	distribution, color wavelength and aiming relative to the vehicle, such as straight ahead, and or downwards and or off towards the right or left. The SLS may have one junction and be monochromatic or have a many junctions and provide a wide spectral power distribution and the power to the SLS may be varied. An SLS can also be a "white" LED. For example a typical "white" LED such as a Luxeon® white LED such as LXHL-XXXX will have a colder "bluish" 4,500K color temperature. LED **277** at a second location within the same cluster may have a similar or dissimilar aiming, wavelength and spatial light distribution. The concept cluster shown by the dashed lines, is used to describe a control function and is not necessarily related to contiguous placement. In general a cluster may be deemed a separate grouping due to a function it performs, either exclusively or in conjunction with other clusters or sub-clusters, such as high beam function versus a second cluster **278** which may provide a parking light function. The same SLS may be used, albeit at different intensities, for both the above functions and thus clusters may overlap and be discontinuous. **17:3-16** As used herein, the term "light source", LED or "solid state light source" means any system that is capable of receiving an electrical signal and producing light in response to the signal. Thus, the term "light source" should be understood to include light emitting diodes of all types, light emitting polymers, semiconductor dies that produce or emanate light in response to current, organic LEDs, electro-luminescent strips, and other such systems. Incandescent and discharge light sources are also included and multiples of incandescent and discharge light sources also provide a digital

	luminaire. In an embodiment, a "light source" may refer to a single light emitting diode package including multiple semiconductor LED dies that are individually controlled.
electronic circuitry apparatus for the controlled powering of the LEDs and other of the illuminating device elements;	**Claim 6 of the '551 patent**
one or more processors;	**18:23-29** In a preferred embodiment the DLF is provided with an onboard controller. The controller may be a computer board, embedded device, a Digital Signal Processor, etc. In general, the term "logical controller, controller or computer" can be broadly defined to encompass any device having control circuitry or a processor which executes instructions from a memory medium.
one or more sensors, including one or more cameras, placed on the structure for detecting coordinate-specific information about the illuminated area, at least one of said cameras in communication with power, and in communication with at	**Claim 6 of the '551 patent** **25:34-42** In a preferred embodiment the DLF contains logic control electronics unit 7. Logic control electronics unit, 7, receives input and/or feedback from motion, intensity and/or spectral sensors **8**, or from manual control button **9** and increases or decreases or turns on or shuts off the power to one or more of the SLS to effect the desired change. That is, the control logic unit 7 has stored parameters for intensity and spectral distribution and operates the MSLS lamp within the predefined range.

least one of the one or more processors;	**25:53-67** Sensors **8** include any of the following: light, temperature and motion detection devices. Two types of optical detection sensors may be used: A photo detector with specific spectral sensitivity to detect a specific color. For example a standard red, blue and green set which would then indicate how "white" the light is. Alternately, a wide spectrum photo detector that irrespective of color measures the intensity of each excited die as it is test fired, based on the eye visual sensitivity curve. The optical sensor may be lensed and capable of forming an image, that is a camera and the detector may be a detector array of photodiode pixels. The detector array may be a CMOS or CCD VSLI array and may be monochromatic or color as in a monochromatic or digital camera. Such arrays are readily available in mega-pixel resolution.
a controller, including at least one of the one or more processors, integrated with the structure via mounting, in communication with the LED controlling power electronic circuitry apparatus, said controller arranged to process the information communicated from the cameras and to automatically control the light provided to the illuminated area; and	**Claim 6 of the '551 patent** **25:34-52** In a preferred embodiment the DLF contains logic control electronics unit 7. Logic control electronics unit, 7, receives input and/or feedback from motion, intensity and/or spectral sensors **8**, or from manual control button **9** and increases or decreases or turns on or shuts off the power to one or more of the SLS to effect the desired change. That is, the control logic unit 7 has stored parameters for intensity and spectral distribution and operates the MSLS lamp within the predefined range. The control unit may include a DSP or computer with storage media, computer algorithms, signal input and output electronics, analog to digital converters, and communications elements to carry out intensity, distribution, dimming and color balance control. Computer

	algorithms and instruction sets 7A are induced by the logical controller to manipulate data, calculate results generate output signals and maintain the operating parameters within the specifications. Measured parameters are checked against the stored parameters and the control circuitry adjusts the power to SLS. **53:48-50** … the external controller **279** which receives traffic data from sensors **280** …
memory storing instructions that, when executed by one or more processors of the controller, enable the controller to:	**25:42-50** The control unit may include a DSP or computer with storage media, computer algorithms, signal input and output electronics, analog to digital converters, and communications elements to carry out intensity, distribution, dimming and color balance control. Computer algorithms and instruction sets 7A are induced by the logical controller to manipulate data, calculate results generate output signals and maintain the operating parameters within the specifications. **54:45-47** The controller **279** will addresses the power supply of each DLF headlamp **270**, **296** and **294** independently such that each lamp performs its functions separately.
determine first coordinates corresponding to an other vehicle, based on the coordinate-specific information;	**45:53-55** The controller **195**, based on the camera input runs the pattern recognition routines, derives the coordinates and generates instructions to drive the specific light sources with aimings which

	will project light at the speaker as the speaker move about the room. **1:25-36** The present invention is in the field of radiation producing devices. More particularly, the present invention is in the technical field of lighting fixtures. However, radiation used for headlamps, heating, night vision, UV or visible light curing, medical X-rays and other radiation uses are covered as well. General lighting fixtures otherwise known as luminaires will be used as the primary example while other irradiating devices such as infrared heaters are covered as well. The invention relates to multiple light source illuminating devices intended to replace incandescent, fluorescent and HID luminaries in general and specialty lighting applications. **52:54-65** Additional features can include an optional very narrow flashlight type of beam. Present day LEDs come in very narrow aimings such as two half angle 8 degrees which may not be narrow enough (a 10 meter spread for 150 meters down the road which may be sufficiently aimed to the right) but with need, smaller angles are also feasible. Such a beam at the correct narrow aiming can continue to illuminate far ahead (in high beam) without blinding oncoming traffic. Analysis by a detector or an imaging system of the oncoming vehicles position (using its headlights for example) can be used to determine which exact aiming is the maximum allowable for any given traffic situation and road layout.

	95:3-14 There has thus been shown and described, among other things, a multiple-source lighting technology which allows for the design and construction of illuminating devices. Many changes, modifications, variations and other uses and applications of the subject invention will, however, become apparent to those skilled in the art after considering this specification and the accompanying drawings which disclose the preferred embodiments thereof. All such changes, modifications, variations and other uses and applications which do not depart from the spirit and scope of the invention are deemed to be covered by the invention without departing from the spirit or scope of the following claims.
<u>select a cluster of the LEDs that emit light toward at least a portion of the other vehicle based on the LEDs having emission aimings associated with the first coordinates; and</u>	**45:53-55** The controller **195**, based on the camera input runs the pattern recognition routines, derives the coordinates and generates instructions to drive the specific light sources with aimings which will project light at the speaker as the speaker move about the room. **52:54-65** Additional features can include an optional very narrow flashlight type of beam. Present day LEDs come in very narrow aimings such as two half angle 8 degrees which may not be narrow enough (a 10 meter spread for 150 meters down the road which may be sufficiently aimed to the right) but with need, smaller angles are also feasible. Such a beam at the correct narrow aiming can continue to illuminate far ahead (in high beam) without blinding oncoming traffic. Analysis by a detector or an imaging system of the oncoming vehicles position (using its headlights for example) can be used to

	determine which exact aiming is the maximum allowable for any given traffic situation and road layout. **1:25-36** The present invention is in the field of radiation producing devices. More particularly, the present invention is in the technical field of lighting fixtures. However, radiation used for headlamps, heating, night vision, UV or visible light curing, medical X-rays and other radiation uses are covered as well. General lighting fixtures otherwise known as luminaires will be used as the primary example while other irradiating devices such as infrared heaters are covered as well. The invention relates to multiple light source illuminating devices intended to replace incandescent, fluorescent and HID luminaries in general and specialty lighting applications. **95:3-14** There has thus been shown and described, among other things, a multiple-source lighting technology which allows for the design and construction of illuminating devices. Many changes, modifications, variations and other uses and applications of the subject invention will, however, become apparent to those skilled in the art after considering this specification and the accompanying drawings which disclose the preferred embodiments thereof. All such changes, modifications, variations and other uses and applications which do not depart from the spirit and scope of the invention are deemed to be covered by the invention without departing from the spirit or scope of the following claims.