UNITED STATES PATENT AND TRADEMARK OFFICE

BEFORE THE PATENT TRIAL AND APPEAL BOARD

VOLKSWAGEN GROUP OF AMERICA, INC.,
Petitioner

v.

YECHEZKAL EVAN SPERO,
Patent Owner

Case IPR2023-00336
U.S. Patent No. 9,955,551

PETITION FOR *INTER PARTES* REVIEW
OF U.S. PATENT NO. 9,955,551

Mail Stop PATENT BOARD
Patent Trial and Appeal Board
U.S. Patent & Trademark Office
P.O. Box 1450
Alexandria, VA 22313-1450

TABLE OF CONTENTS

I. INTRODUCTION 1
II. GROUNDS FOR STANDING (37 C.F.R. § 42.104(A)) 2
III. IDENTIFICATION OF CHALLENGE (37 C.F.R. § 42.104(B)) 2
A. Prior Art 2
B. Statutory Grounds for the Challenge 3
IV. THE '551 PATENT 3
A. Technology Background 3
B. The '551 Patent 5
C. Prosecution History Summary 8
D. Level of Ordinary Skill in the Art 9
E. Claim Construction 9
1. "*lighting fixture*" and "*light fixture*" 10
2. "*light source(s)*" 11
V. OVERVIEW OF APPLIED REFERENCES 12
A. Braun 12
B. Dowling 14
C. Bailey 15
D. Begemann 16
E. Lee 18
F. Pederson 19
VI. GROUND 1: BRAUN RENDERS CLAIMS 1-3 OBVIOUS 20
A. Braun renders independent claim 1 obvious 20
1. [1.P] 20
2. [1.A] 22
3. [1.B] 23
4. [1.C] 25
5. [1.D] 26
6. [1.E] 27

7. [1.F] 28
8. [1.G] 30
9. [1.H] 30
B. Claim 2 32
C. Claim 3 32
VII. GROUND 2: BRAUN, ALONE OR IN VIEW OF DOWLING, RENDERS CLAIMS 4 AND 7 OBVIOUS 34
A. Motivation to combine Braun and Dowling 34
B. Claim 4 35
1. [4.A] 35
2. [4.B] 37
C. Claim 7 38
1. [6.P] 38
2. [6.A] 38
3. [6.B] 38
4. [6.C] 40
5. [6.D] 41
6. [6.E] 42
7. Claim 7 43
VIII. GROUND 3: THE COMBINATION OF BRAUN, DOWLING, AND BAILEY RENDERS CLAIMS 8, 10-13 AND 15-18 OBVIOUS 44
A. Motivation to combine Braun, Dowling, and Bailey 44
B. Claim 8 46
1. [8.P] 46
2. [8.A] 46
3. [8.B] 46
4. [8.C] 48
5. [8.D] 48
6. [8.E] 49
7. [8.F] 50

C. Claim 10 51
D. Claim 11 52
E. Claim 12 52
F. Claim 13 53
G. Claim 15 53
H. Claim 16 55
I. Claim 17 56
J. Claim 18 56
IX. GROUND 4: BEGEMANN AND LEE RENDER CLAIMS 1-4 OBVIOUS 57
A. Rationale for combining Begemann and Lee 57
B. Begemann, alone or in view of Lee, renders independent claim 1 obvious. 59
1. [1.P] 59
2. [1.A] 60
3. [1.B] 61
4. [1.C] 63
5. [1.D] 64
6. [1.E] 65
7. [1.F] 67
8. [1.G] 68
9. [1.H] 70
C. Claim 2 70
D. Claim 3 71
E. Claim 4 72
1. [4.A] 72
2. [4.B] 72
X. GROUND 5: THE COMBINATION OF BEGEMANN, LEE, AND PEDERSON RENDERS CLAIMS 8 AND 10-18 OBVIOUS 73
A. The motivation to combine Begemann, Lee, and Pederson 73

B. Claim 8 76
1. [8.P] 76
2. [8.A] 76
3. [8.B] 76
4. [8.C] 78
5. [8.D] 78
6. [8.E] 78
7. [8.F] 79
C. Claim 10 79
D. Claim 11 80
E. Claim 12 80
F. Claim 13 81
G. Claim 14 81
H. Claim 15 82
I. Claim 16 83
J. Claim 17 83
K. Claim 18 84
XI. SECONDARY CONSIDERATIONS DO NOT SUPPORT NONOBVIOUSNESS 84
XII. DISCRETIONARY CONSIDERATIONS UNDER SECTIONS 314(A), 325(D), AND 315(D) STRONGLY FAVOR INSTITUTION 85
A. The *Fintiv* factors strongly favor institution 85
B. *General Plastic* and *Valve Corp.* strongly favor institution 86
C. *Advanced Bionics* strongly favors institution 87
D. Early examination stage of the reissue application strongly favors institution 87
XIII. MANDATORY NOTICES (37 C.F.R. § 42.8(A)(1)) 88
XIV. CONCLUSION 90
XV. APPENDIX A: THE CHALLENGED CLAIMS 91

PETITIONER'S EXHIBIT LIST

Exhibit #	*Description*
1001	U.S. Patent No. 9,955,551 B2 to Spero ("the '551 patent")
1002	Prosecution File History of U.S. Patent No. 9,955,551 B2 ("'551 Prosecution History")
1003	Declaration of Dr. E. Fred Schubert ("Schubert Declaration")
1004	Curriculum Vitae of Dr. E. Fred Schubert ("Schubert CV")
1005	WIPO Patent Publication No. WO 02/04247 to Braun, *et al*. ("Braun")
1006	U.S. Patent No. 6,250,774 to Begemann, et al. ("Begemann")
1007	U.S. Patent No. 6,079,862 to Kawashima, et al. ("Kawashima")
1008	Ex Parte Reexamination Certificate issued August 19, 2022 for U.S. Patent No. 9,955,551.
1009	U.S. Patent No. 5,796,094 to Schofield, et al. ("Schofield")
1010	U.S. Patent No. 6,144,159 to Lopez, et al. ("Lopez")
1011	U.S. Patent Application Publication No. 2002/0048174 to Pederson ("Pederson")
1012	File History of *Ex Parte* Reexamination Request No. 90/014,815 filed on July 30, 2021 for U.S. Patent No. 9,955,551 ("the '815 reexamination")
1013	The IESNA Lighting Handbook, Illuminating Engineering Society of North America, 9th Edition, 2000, ISBN 0-87995-150-8 ("IESNA Handbook")
1014	Schalkoff, Pattern Recognition, statistical, structural and neural approaches, John Wiley and Sons, New York, 1992.
1015	*Intentionally left blank*
1016	*Intentionally left blank*
1017	WIPO Patent Publication No. WO 01/70538 ("Stam PCT")
1018	John Vaglica and Peter Gilmour, "*How to Select a Microcontroller*," IEEE Spectrum, November 1990. (Accessible at https://ieeexplore.ieee.org/document/62226)
1019	Ata Khan, "*Workhorses of the Electronic Era*," IEEE Spectrum,

Exhibit #	*Description*
	October 1996. (Accessible at https://ieeexplore.ieee.org/document/540088)
1020	U.S. Patent No. 6,498,440 to Stam, et al. ("Stam '440")
1021	U.S. Patent No. 5,803,579 to Turnbull, et al. ("Turnbull")
1022	U.S. Patent No. 6,528,954 to Lys, et al. ("Lys")
1023	U.S. Patent No. 6,681,032 to Bortolussi, et al. ("Bortolussi")
1024	U.S. Patent No. 5,991,429 to Coffin, et al. ("Coffin")
1025	U.S. Patent No. 6,856,873 to Breed, et al.
1026	U.S. Patent No. 7,298,871 to Lee, et al., ("Lee")
1027	WIPO Patent Publication No. WO 02/25842 to Dowling, et al. ("Dowling")
1028	*Intentionally left blank*
1029	*Intentionally left blank*
1030	Westermann, "History and Scientific Back-up," 48th Session of GRE, EUREKA Project 1403, Informal Document No. 30, April 30, 2002 ("Westermann")
1031	*Intentionally left blank*
1032	Assessment of Headlamp Glare and Potential Countermeasures, Survey of Advanced Front Lighting System (AFS) Research and Technology, National Highway Traffic Safety Administration (2005) ("NHTSA Survey")
1033	U.S. Patent No. 6,585,395 to Luk ("Luk")
1034	U.S. Patent No. 5,181,429 to Sieber ("Sieber")
1035	U.S. Patent No. 5,752,766 to Bailey, et al. ("Bailey")
1036	U.S. Patent No. 5,828,485 to Hewlett ("Hewlett")
1037	U.S. Patent No. 4,712,167 to Gordin, et al. ("Gordin")
1038	Stephen McKenna and Shaogang Gong, "*Tracking Faces*" Proceedings of the Second International Conference on Automatic Face and Gesture Recognition, Killington, VT, Oct. 14-16, 1996, pp. 271-276 ("McKenna")
1039	WIPO Patent Publication No. WO 00/19705 ("Iddan")

Exhibit #	***Description***
1040	*Intentionally left blank*
1041	*Intentionally left blank*
1042	U.S. Patent No. 5,038,261 to Kloos ("Kloos")
1043	U.S. Patent No. 6,501,536 to Fredricks ("Fredricks")
1044	*Intentionally left blank*
1045	*Intentionally left blank*
1046	Handbook of Optics, vol. I. (Michael Bass et al. eds., 2nd ed. 1995), ISBN 0-07-047740-X ("Optics I")
1047	Handbook of Optics, vol. III. (Michael Bass et al. eds., 2nd ed. 2001), ISBN 0-07-135408-5 ("Optics III")
1048	File History of Reissue Application No. 16/858,342 filed on April 24, 2020 for U.S. Patent No. 9,955,551 ("'342 Reissue History")
1049	M. George Craford, "*LEDs Challenge the Incandescents*," IEEE Circuits and Devices, vol. 8(5), 24-29 (1992) ("Craford")
1050	*Intentionally left blank*
1051	Scheduling Order, *Torchlight Techs. LLC v. Daimler AG, et al.*, Civil Action No. 1:22-cv-00751 (D. Del.), filed August 26, 2022 (ECF No. 24)
1052	First Amended Complaint, *Torchlight Techs. LLC v. Daimler AG, et al.*, Civil Action No. 1:22-cv-00751 (D. Del.), filed August 26, 2022 (ECF No. 24)

I. INTRODUCTION

Volkswagen Group of America, Inc. ("VWGoA" or "Petitioner") petitions for *inter partes* review ("IPR") and cancellation of claims 1-4, 7-8, and 10-18 ("the challenged claims") of U.S. Patent No. 9,955,551 ("the '551 patent") to Yechezkal Evan Spero, purportedly exclusively licensed to Torchlight Technologies LLC (collectively "Patent Owner"). EX1052, Amended Complaint, 8.

The '551 patent purportedly discloses a light fixture of adaptive lighting using light source (light emitting diode "LED") combined with controllers and sensors. §IV.B. However, the alleged invention is merely a collection of techniques (e.g., LED, digital camera, light feedback, pattern recognition) known before the earliest possible priority date. §IV.A. Unsurprisingly, Patent Owner admits repeatedly that a plethora of techniques claimed in the '551 patent were known in the art. §IV.B; *see generally* EX1001; EX1002, '551 Prosecution History, 333-337. Indeed, there is nothing new in any of the claim elements or the combinations thereof.

Petitioner's expert, Dr. E. Fred Schubert, has over 30 years of experience in adaptive lighting, automotive lighting, and optical engineering. EX1003, Schubert Declaration, ¶¶8-20; EX1004, Schubert CV. His testimony supports that the Grounds demonstrate the challenged claims are unpatentable. EX1003, ¶¶6-7. Therefore, Petitioner respectfully requests that the Board institute review and

ultimately find the challenged claims unpatentable.

II. GROUNDS FOR STANDING (37 C.F.R. § 42.104(A))

The undersigned and Petitioner certify that the ’551 patent is available for IPR. Petitioner is not barred or estopped from requesting IPR on the grounds herein. On June 7, 2022, Torchlight Technologies LLC filed a complaint against Petitioner alleging infringement of the ’551 patent. This Petition is filed within one year of service on Petitioner.

III. IDENTIFICATION OF CHALLENGE (37 C.F.R. § 42.104(B))

A. Prior Art

The ’551 patent is not entitled to the July 12, 2002 priority benefit of its earliest-filed provisional application, but even if it were:

International Publication No. WO 02/04247 (EX1005, “Braun”), published on January 17, 2002, is prior art under § 102(a);

International Publication No. WO 02/25842 (EX1027, “Dowling”), published on March 28, 2002, is prior art under § 102(a);

U.S. Patent No. 5,752,766 (EX1035, “Bailey”), issued May 19, 1998, is prior art under § 102(b);

U.S. Patent No. 6,250,774 (EX1006, “Begemann”), issued June 26, 2001, is prior art under § 102(b);

U.S. Patent No. 7,298,871 (EX1026, “Lee”), filed June 7, 2002, is prior art under § 102(e); and

U.S. Patent Application Publication No. 2002/0048174 (EX1011, "Pederson"), published on April 25, 2002, is prior art under § 102(a).

B. Statutory Grounds for the Challenge

Ground	References	Basis	Claims Challenged
1	Braun	§103	1-3
2	Braun, Dowling	§103	4, 7
3	Braun, Dowling, Bailey	§103	8, 10-13, 15-18
4	Begemann, Lee	§103	1-4
5	Begemann, Lee, Pederson	§103	8, 10-18

IV. THE '551 PATENT

A. Technology Background

LEDs had been widely used long before 2002. EX1003, ¶¶44-49. Various colored LEDs were available, and high flux LEDs enabled "a viable alternative" to incandescent lamps. EX1049, Craford; EX1021, Turnbull, 3:10-15. In 1995, LEDs were listed as light sources in the IESNA Handbook, and standards had been developed for products containing LEDs. EX1013, IESNA Handbook, 174, 265-267. It was known that LEDs can be "highly directional," where intensity can be adjusted by regulating direct current or the pulse width modulation (PWM) of pulse current. *Id*.

By the 1990s, implementing lighting controls (e.g., light feedback) for

specific applications had "become an essential element of good lighting design and an integral part of energy management." *Id.*, 590-605. For example, photodetectors were used to evaluate "the light level and send[] a signal to a control unit to dim or switch the electric lights to maintain a preset target level," e.g., "in response to the amount of available daylight." *Id.*, 323-350, 590-591; EX1022, Lys, Abstract, 40:52-41:7, FIG. 73. Task tuning had been performed such that "the lighting system can be adjusted, or tuned, to provide local illumination as needed." EX1013, 592.

Solid-state detectors (e.g., photodiodes) were known to detect spectra ranging "from the UV to the far IR region," where cameras having a charge-coupled device (CCD) array had been used to "capture and digitize electronic images of visual scenes," to "determine the luminance at every point in the scene, corresponding to the pixels of the camera's CCD array." *Id.*, 45, 49, 598; EX1009, Schofield, Abstract, 3:36-56, FIGs. 3, 9; EX1046, Optics I, 71-108; EX1047, Optics III, 14-35.

Known lighting control systems also included memories and processors that receive input from a sensor, analyze data according to a predetermined set of rules, and initiate changes for the lighting system. EX1013, 490, 593-596, 600. Various lighting calculation methods had been used to determine the desire illumination condition, e.g., "to evaluate the potential glare from luminaires." *Id.*, 351-422, 287-289, 306, 109-111.

Putting these together, LEDs had also been used as the "digitally controlled"

light sources in smart light bulbs, where the processors control the intensity and/or the color of individual LEDs in response to electrical signals from a computer program, a remote control, or detectors. EX1022, Abstract, 5:38-45, 6:62-63, 11:43-46, 16:44-64, FIG. 6. The smart light bulbs can have a transmitter and/or receiver to communicate with another device (e.g., another smart light bulb). *Id.*, Abstract. Additionally, video analytics (or digital image processing), pattern recognition, and artificial intelligence had been used for data processing and decision making, e.g., for object identification. EX1007, Kawashima, Abstract, FIG. 1; EX1014, Schalkoff, 2-31; EX1036, Hewlett, Abstract. Cameras had been used to collect light reflected from the object and provide images to the processors that perform video analytics and/or pattern recognition to determine illumination conditions for the identified object. EX1007, 1:7-11; 9:53-10:14, FIG. 1; EX1009, Abstract; EX1036, Abstract. Specifically, facial recognition has been used to identify individuals. EX1023, Bortolussi, 1:66-2:10, Abstract, FIG. 1; EX1024, Coffin, Abstract, FIG. 6; EX1025, Breed, Abstract, 4:8-56; EX1038, McKenna, Abstract. Image sensors (e.g., CCD cameras) were used to sense light in spatially separated regions. EX1009, 2:6-15, 2:22-35, Abstract.

B. The ’551 Patent

The ’551 patent allegedly provides “[a]n illuminating device coupled with sensors or an image acquisition device and a logical controller allow[ing]

illumination intensity and spectrum to be varied according to changing user needs," where the "digital" light source is LED. EX1001, Abstract, 13:47-50, 13:61-63, 16:39; EX1003, ¶¶50-52. Figure 1 shows a block diagram of the alleged digital lighting fixture (DLF), which contains logic control electronics unit 7 and sensors 8. EX1001, 25:34-52, FIG. 1.

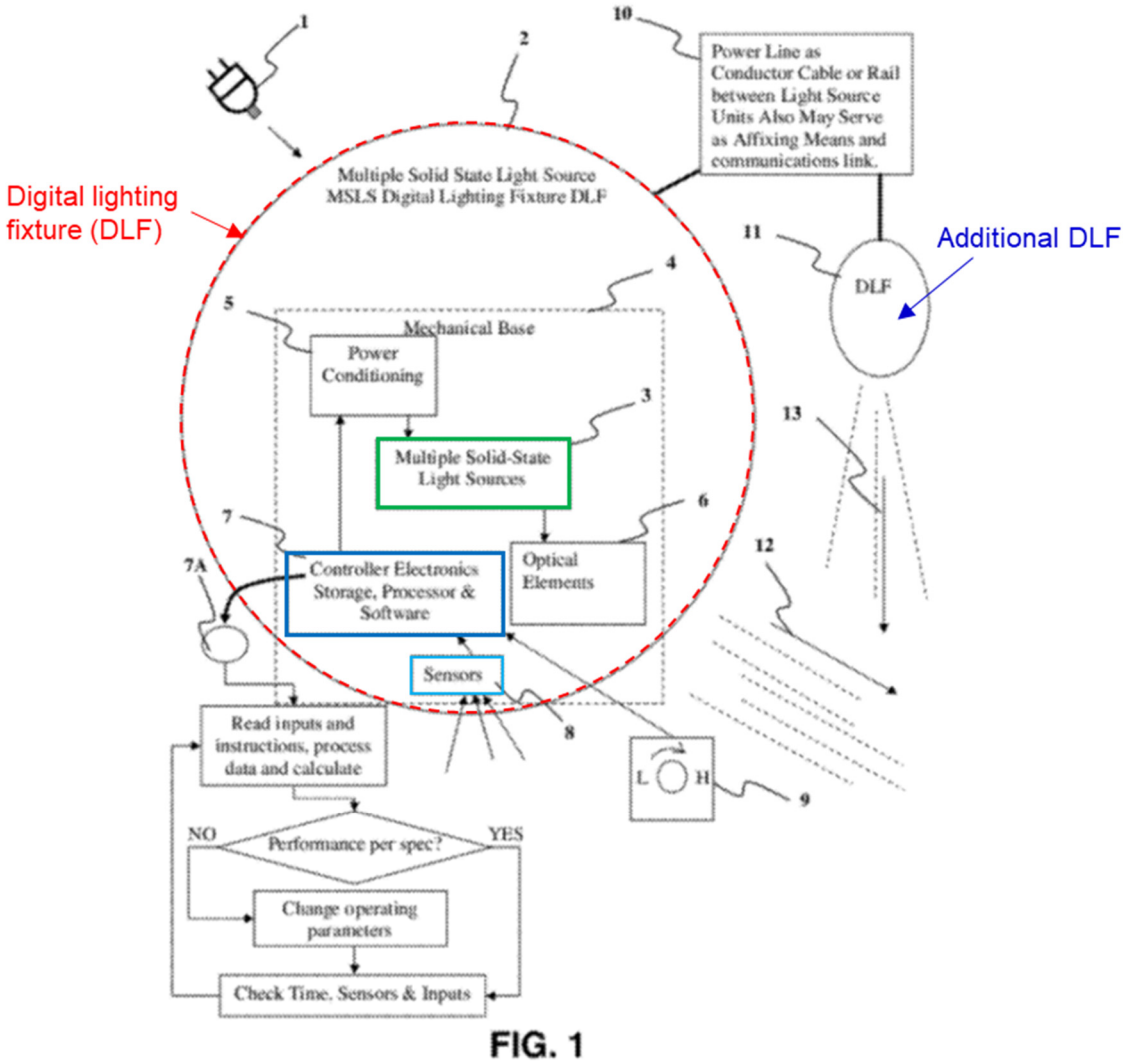

EX1001, FIG. 1 (annotated).

For example, DLF 16 includes sensor 21 and controller 20. *Id.*, 28:18-55,

30:18-28, 38:37-39. DLF 190 includes computer control and communications unit 195, light sensor 196, camera 197, motion detector 200, and controller 195, where section 222 of light sources provides task-lighting 224. *Id.*, 38:37-39:14, 41:23-30, 40:52-61, FIG. 12. Remote control unit 201 is used to operate and program the Adaptive DLF. *Id.*, 39:15-16, FIG. 12.

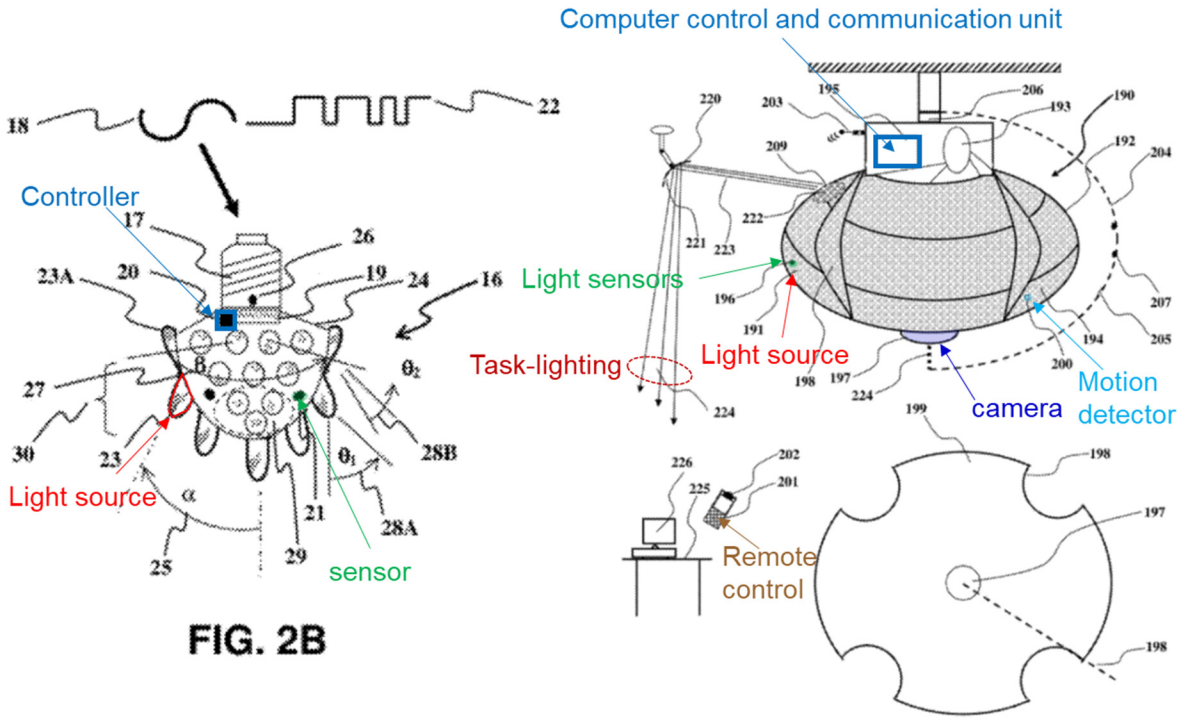

EX1001, FIGs. 2B, 12 (annotated).

But all the alleged novel features of the DLF/ADLF were known before the effective filing date of the ’551 patent. EX1003, ¶53; *see* §§IV.A, V-X. Especially, the ’551 patent **admits** that the claimed features were known in the art. For example, using individually-controlled LED as light source was known. EX1001, 5:60-62, 6:13-16, 6:19-24, 6:34-37. 6:55-56, 6:65-7:7, 7:24-32. Using optics to form

directional LED light was known. *Id.*, 17:56-63. Packaging LEDs with electronic circuitry into an integrated structure was known. *Id.*, 17:66-18:14, 18:46-47. Using sensors for various measurements and performing data analysis to correct LED's power level were known. *Id.*, 26:7-11. Using photodiodes to detect light intensity and using optical feedback to produce desired lighting effects were known. *Id.*, 7:8-23, 7:33-45, 8:33-39, 9:7-9, 27:15-20. Projecting LEDs at a desired angle was known. *Id.*, 30:45-50, 66:64-67, FIG. 2C. Using pattern recognition, artificial intelligence, image processing, or machine vision system to identify objects (e.g., individuals) was known. *Id.*, 41:8-11, 44:37-40, 44:63-45:9, 45:15-22, 48:30-32, 63:9-12, 63:29-56, 64:5-9, 64:46-49, 69:25-29, 83:1-5, 94:28-32. Object (e.g., an individual) tracking techniques were known. *Id.*, 45:47-50, 45:67-46:6, 57:14-18. Lighting calculation, design, and practice standards were known. *Id.*, 39:33-38, 41:27-30, 41:43-57, 42:16-21, 71:3-6, 72:23-25, 93:66-94:2. Communication connections and protocols were known. *Id.*, 47:41-44. Thus, it is unsurprising that the '551 patent does not describe the details of implementation, but rather leaves it to a POSA. The alleged novelty of the '551 patent is simply a collection of known techniques, where the combinations were known and obvious. EX1003, ¶54.

C. Prosecution History Summary

The Patent Application No. 13/357,549 ("the '549 application") that issued as the '551 patent underwent multiple rounds of prosecution. EX1003, ¶¶55-58. In a

final rejection maintaining obviousness rejections, the Office pointed out that "amending the claim to add 'where one or more light sources are directional' is not novel. Directional lighting is universal." EX1002, 502-539. After the Request of Continued Examination, the Office allowed independent claim 8 based on US 2012/0287493 to Kuhlman, et al.[1] *Id.*, 578-579. The Office allowed independent claim 1 stating that US 2004/0052076 to Mueller, et al. does not disclose the claimed "*processor*" in claim elements [1.F]-[1.H].[2] *Id.*, 612. After another Office Action, the Office issued a Notice of Allowance. *Id.*, 666-673.

D. Level of Ordinary Skill in the Art

For the '551 patent, a POSA at the time of the alleged invention would have had a bachelor's degree (B.S.) in mechanical engineering, electrical engineering, optical engineering, applied physics, or an equivalent field, as well as at least 2 years of industry experience in the area of lighting and lighting-control systems. The POSA may work as part of a team, for example, with computer engineers to integrate and program controllers and various inputs to control a given light source. EX1003, ¶¶41-43.

E. Claim Construction

In an IPR, claims are "construed using the same claim construction standard

---

[1] Claim 8 was not examined under Mueller.

[2] Claims and claim elements of the '551 patent are listed in Appendix A.

that would be used to construe the claim in a civil action under 35 U.S.C. 282(b)." 37 C.F.R. § 42.100 (b). If trial is instituted, all claim terms must be given their ordinary and customary meaning as understood by one of ordinary skill in the art at the time of the invention, in light of the specification and the prosecution history of the patent. *Id.*; *Phillips v. AWH Corp.*, 415 F.3d 1303, 1312-1313 (Fed. Cir. 2005) (en banc); *see also* 83 Fed. Reg. 51,340 (Oct. 11, 2018).

Without waiver, Petitioner does not believe any claim terms require specific construction and thus should receive their plain and ordinary meaning, in the context of the '551 patent specification, under *Phillips*. EX1003, ¶¶59-64.

1. "*lighting fixture*" and "*light fixture*"[3]

The '551 patent explains that "[a] Lighting Fixture or luminaire (the terms are used interchangeably) is a device which is constructed around the lamp to provide lighting specific to the application." EX1001, 2:12-16. "A luminaire has apparatus whereby it is attached to the building structure," and provides "a wide scope of applications." *Id.*, 2:35-42, 11:14-18, 13:5-9, 14:25-30, 49:61-67, 65:36-40, FIGs. 1, 2B-2C, 3B, 4, 5, 8, 9, 11, 12, 13A-13C, 18A-18B, 20A-20B, 21, 24, 25A-25B, 26, 27, 28A-28B, 30-33. According to the '551 patent, if an LED lamp apparatus "is independent of the lighting application," it "is simply a lamp not a lamp and fixture combination." *Id.*, 6:19-26. However, if a light system with similar LEDs are

[3] Claim elements are in italic unless noted otherwise.

designed "to generate an application specific light distribution pattern capable of providing recommended illuminance levels," it is a lighting fixture. *Id.*, 8:46-9:3. Comparing the lighting fixtures in Figures 2A and 2B, the '551 patent explains that the alleged novelty of "solid-state lighting fixtures (vs. solid-state lamps)" is the control of lighting elements and the adjustment of the lighting solution in the former. *Id.*, 11:8-13, 28:18-29:16, FIGs. 2B, 12. As discussed below, the asserted references disclose the above features of a "*lighting fixtures*." §§VI-X. Therefore, there is no need to construe "*lighting fixture*" or "*light fixture*."

It is noted that the '551 patent also refers to an "automotive headlamp" as a "headlamp fixture." EX1001, 52:1-7. To the extent that Patent Owner impermissibly narrows the "*light fixture*" or "*lighting fixture*" to automotive headlamp, the asserted references still renders the challenged claims obvious. §VI-VIII.

2. "*light source(s)*"

The '551 patent explains that a light source "means any system that is capable of receiving an electrical signal and producing light in response to the signal." EX1001, 17:3-6. The '551 patent considers incandescent, fluorescent, and LED all as light sources. *Id.*, 16:47-51, 17:6-16, 4:57-64, 5:36-40. However, Patent Owner proposed to construe "*light source*" to mean "individual LED" in the *Ex Parte* Reexamination No. 90/014,815 ("the '815 reexamination") of the '551 patent. EX1012, the '815 Reexamination, 15-19. Petitioner disagrees such a narrow

construction and maintains its position that "*light source(s)*" should be interpreted with its plain and ordinary meaning. But, to the extent that the Board adopts Patent Owner's narrow construction, the asserted references still disclose the claimed "*light source(s)*." §§VI-X.

V. OVERVIEW OF APPLIED REFERENCES

A. Braun

Just like the '551 patent, Braun "automatically adapt[s] the illumination to characteristics and features of the scene." EX1005, 1:3-5; EX1003, ¶¶65-66. Braun's illumination system includes an illuminator with independently controllable light providing regions (luxels), each of which provides light that illuminates a different region of the scene. EX1005, Abstract, 2:7-13, FIGs. 1-3. For example, Braun determines distances to regions of the scene with a range finder (e.g., a 3D range-camera), and uses a controller to control the luxels to illuminate the scene responsive to the determined distances. *Id*. Braun's controller uses pattern recognition to process images acquired by the 3D range-camera, identifies features and objects, and adjusts the luxels to illuminate the scene responsive to the identified features and/or objects. *Id.*, 4:17-20.

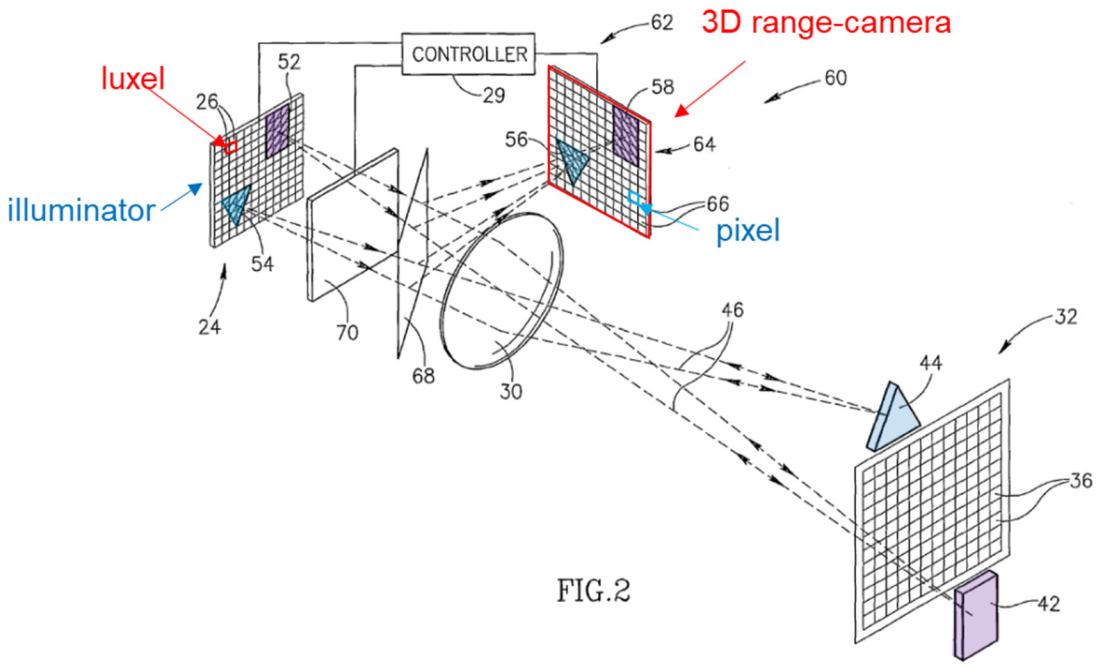

EX1005, FIG. 2 (annotated).

Braun's system can have "monolithically integrated structures" or "distributed components." EX1005, 6:24-32. Braun's system can be used as interior lighting (the focus of the '551 patent) to provide "general illumination of a room or area" and "different illumination effects." *Id.*, 28:6-9, FIG. 8. For example, light bulb 140 uses the pattern recognition application to "identif[y] and locate[] pictures 144 and 146," and adjusts the light sources "to illuminate pictures 144 and 146 with appropriate lighting," e.g., to enhance their respective colors. *Id.*, 27:27-32. Braun's system can also be used as an automotive headlight. *Id.*, 5:21-6:15, FIGs. 5-7.

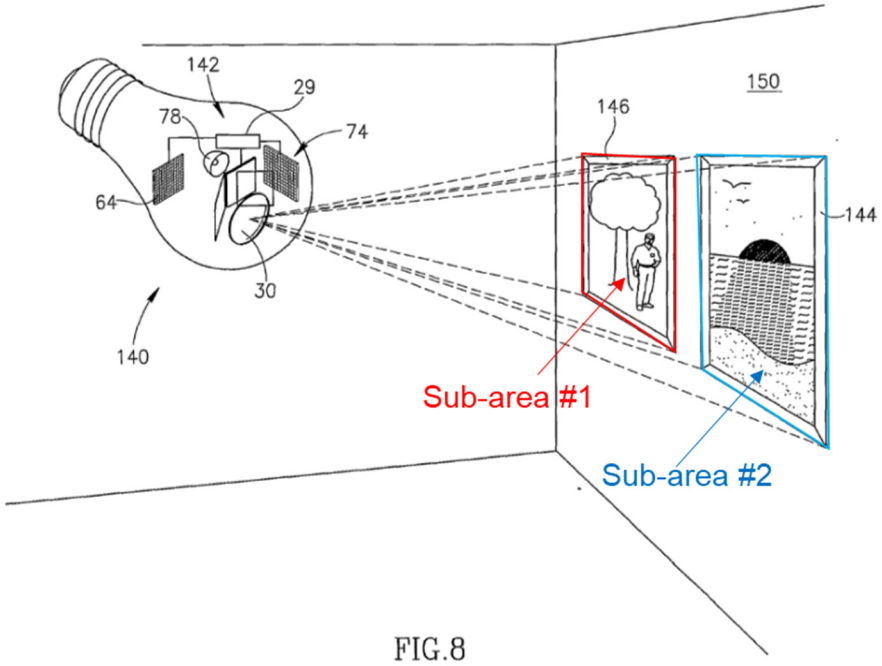

EX1005, FIG. 8 (annotated).

B. Dowling

Dowling discloses smart lighting devices and networks "for communication purposes, building automation, [and] systems monitoring." EX1027, Abstract, 8:18-21, FIGs. 1, 2, 5, 6. Dowling's smart lighting device "include[s] a lighting element and a microprocessor," that controls the lighting element such as LEDs based on input from sensor components (camera, temperature sensor, etc.)." *Id.*, 4:9-22, 5:19-6:12, FIGs. 1, 5; EX1003, ¶67.

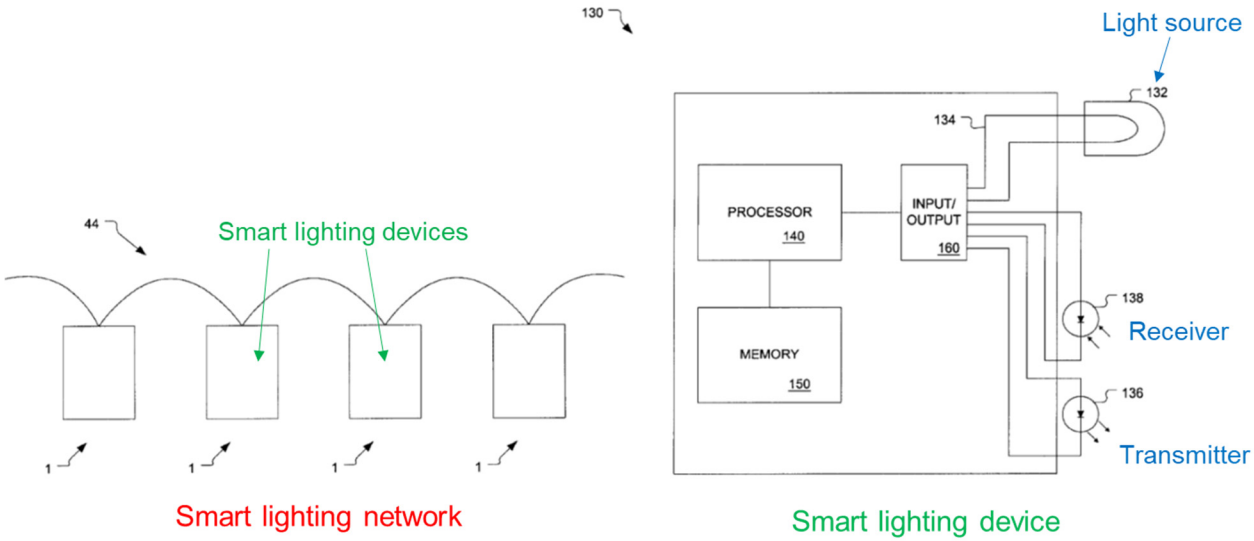

EX1027, FIGs. 2, 5 (annotated).

C. Bailey

Bailey's array of multi-color LEDs mounted on a flexible base member. EX1035, 1:5-9, Abstract, FIG. 2. An actuator "move[s] the base member …to cause the LED array to change the direction of the optical axes of a substantial number of LEDs in the array to focus light emitted from the LEDs, respectively." *Id.*, Abstract, FIG. 2; EX1003, ¶68.

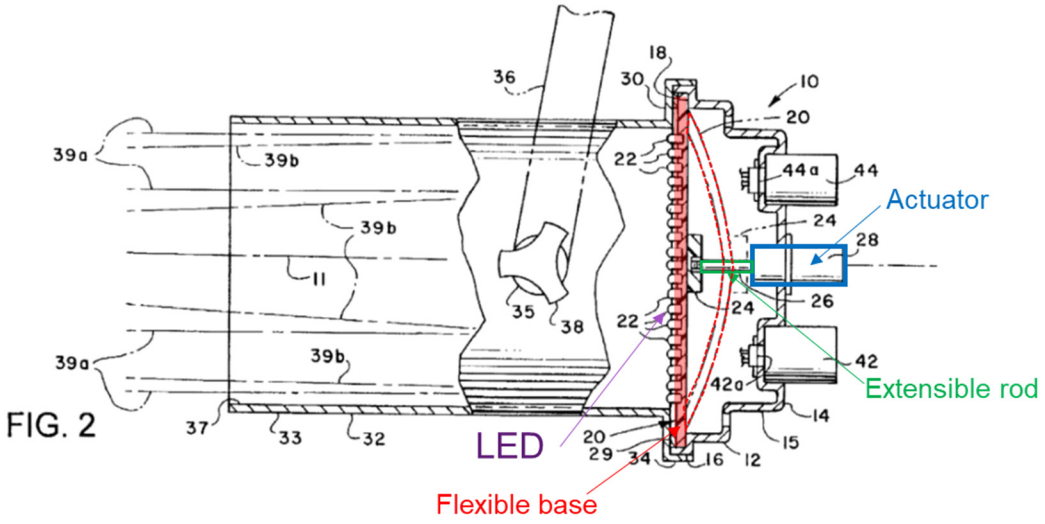

EX1035, FIG. 2 (annotated).

D. Begemann

Begemann's luminaire includes lighting modules accommodated in a housing. EX1006, Abstract, 1:5-8, 5:36-57, 1:30-32, FIGs. 1A-1B, 2-3. The lighting module has lighting units, each of which includes "at least an LED chip" and "illuminate[s] respective portions of an object." *Id*.

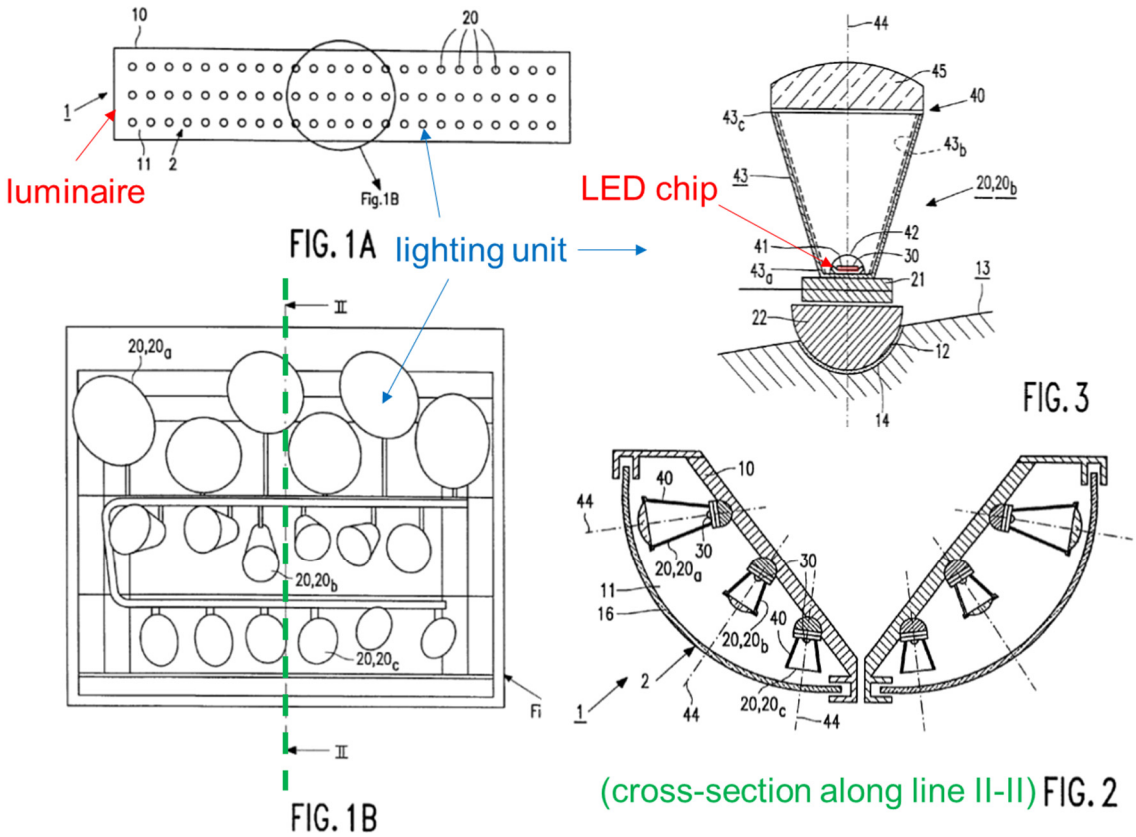

EX1006, FIGs. 1A-1B, 2-3 (annotated).

Begemann's luminaire adjusts the light distribution "through a control of the luminous fluxes of lighting modules or of separate lighting units of a lighting module." EX1006, 1:57-65; EX1003, ¶¶69-70. Begemann's lighting units can illuminate "portions of the object with mutually differing spectra" so that "an optimum visibility of these portions is realized." EX1006, 2:54-62, FIG. 11. Begemann's lighting units can also generate beams "widen more and less strongly." *Id.*, 3:28-40, FIG. 12.

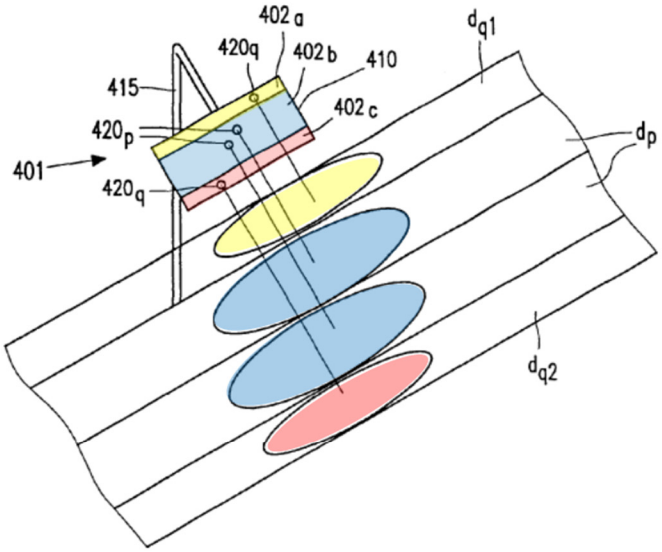

FIG. 11

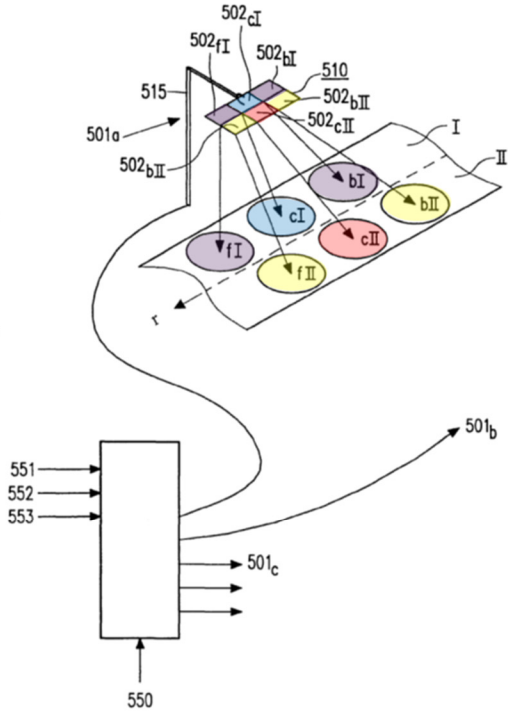

FIG. 12

EX1006, FIGs. 11, 12 (annotated).

E. Lee

Lee "automatically control[s] systems and devices in a local environment, such as a home." EX1026, Abstract, 2:37-3:12, FIGs. 1-3. Lee's control unit receives images of regions of the local environment, "processes the images to identify … known persons located in … the regions." *Id*. Then, the control unit automatically generates a control signal for the servicing components (e.g., lighting), the control signal reflecting a preference of the known persons located in the respective region. *Id*.; EX1003, ¶71.

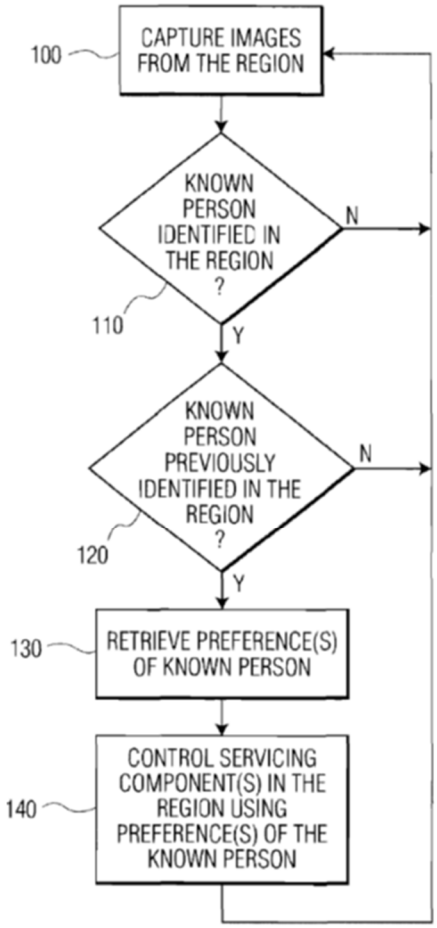

FIG. 3

EX1026, FIG. 3.

F. Pederson

Pederson discloses a warning signal light having a single row, single source, or an array of LED light sources. EX1011, ¶37, FIG. 3. Pederson uses a controller to regulate the illumination of LEDs to a desired pattern, sequence, and/or combination of simultaneous and/or individual light signals. *Id.*, Abstract. While producing rotating and oscillating light signals by sequentially illuminating the LEDs on a

stationary support, Pederson also provides mechanical means (e.g., gyrator) to rotate or oscillate the warning signal light. *Id.*, ¶37, FIG. 3; EX1003, ¶72.

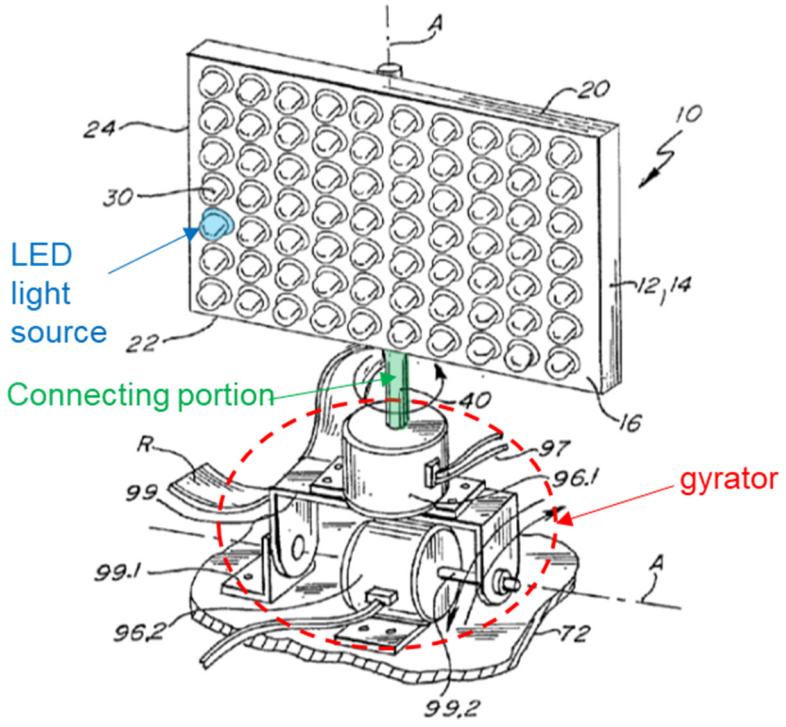

EX1011, FIG. 3 (annotated).

VI. GROUND 1: BRAUN RENDERS CLAIMS 1-3 OBVIOUS

A. Braun renders independent claim 1 obvious

1. [1.P]

Braun's system discloses the claimed "*light fixture*." EX1005, FIGs. 1-3, 5, 8; §IV.E.1. Braun's light bulb may be "mounted in a chandelier" on a ceiling. EX1005, 6:29-32. Braun's illumination system includes a plurality of independently controllable light providing regions 26, each of which "provides light that

illuminates a **different region** of the scene."[4] *Id.*, Abstract, 2:7-13, 2:19-22, 5:21-26, 5:31-6:1, 7:1-7, 9:6-9, 10:20-24, 12:26-33, 13:9-17, FIGs. 1-2, 5-6, 8. Controller "controls the plurality of light providing regions to provide light for illuminating the scene responsive to distances determined by the range finder" (3D range-camera). *Id*. Braun's illumination systems "**automatically** adapt[] the illumination to characteristics and features of the scene." *Id.*, 1:3-5, 6:4-7.

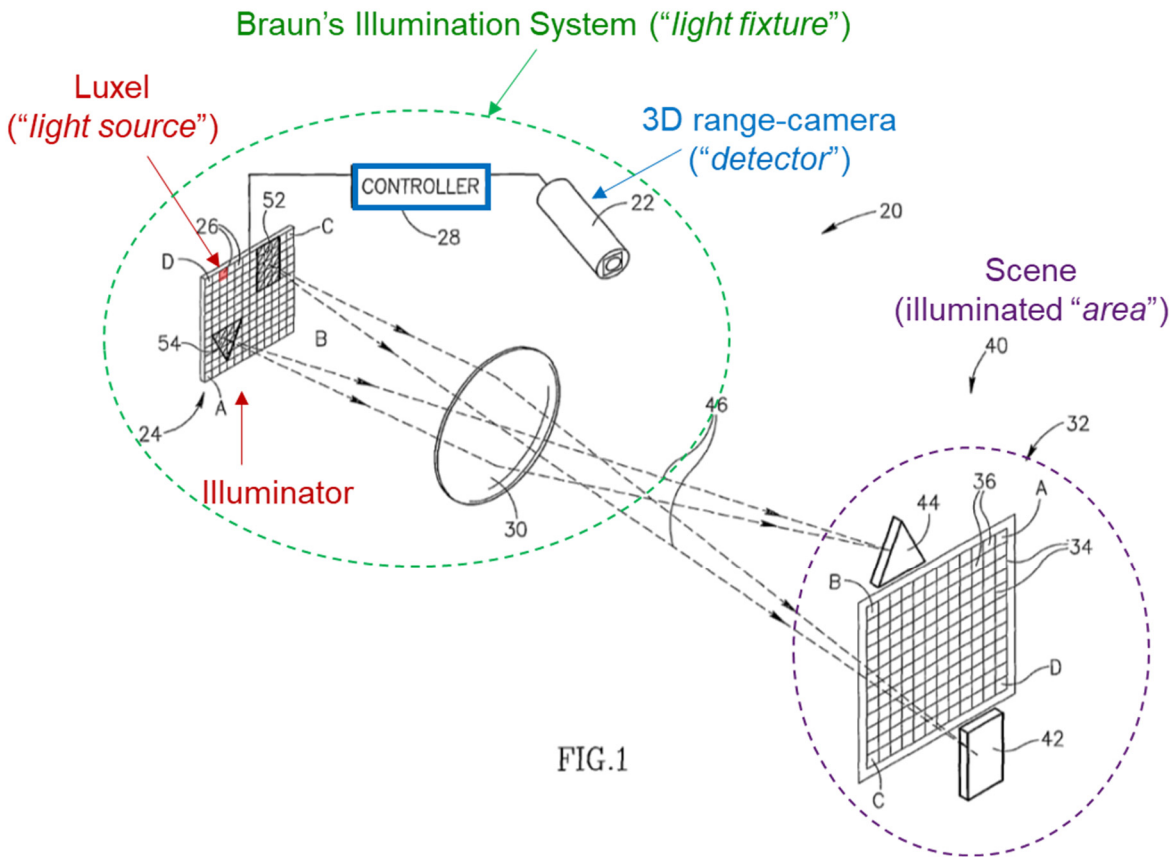

EX1005, FIG. 1 (annotated).

Therefore, Braun discloses an illumination system ("*light fixture*") illuminating

[4] Emphasis added unless noted otherwise.

a scene ("*area to be lit*") and capable of automatically meeting specific illumination requirements of different regions ("*sub-areas*") within the scene.

Braun discloses [1.P]. EX1003, ¶¶74-76.

2. [1.A]

Braun's illuminator includes a plurality of "**independently controllable** light providing regions" (luxels, "*light sources*"), "**each of which** provides light that illuminates a different region of the scene" and the luxels "comprise one or a combination of **light sources**." EX1005, Abstract, 2:7-13, 3:4-8, 7:1-7, 9:6-9, 9:19-10:4, 12:26-33, 13:9-17, 14:16-20, 15:3-7, 15:30-33, FIGs. 1-3; EX1003, ¶78. Braun's luxels may be **LEDs**. EX1005, 19:19-21, 20:9-14; *see also* §IV.E.2.

The light output from Braun's luxels is "**directed** by optics," e.g., lens 30, to an illumination plane 32. EX1005, 2:14-15, 14:31-33. "Dashed lines 46 in Fig. 1 represent selected light rays from luxels 26 in regions 52 and 54 that illuminate rectangular and triangular objects 42 and 44 respectively." *Id.*, 16:6-14, 17:23-25, FIG. 1. Therefore, the light output from Braun's luxels ("*light sources*") are "*directional*." EX1003, ¶79.

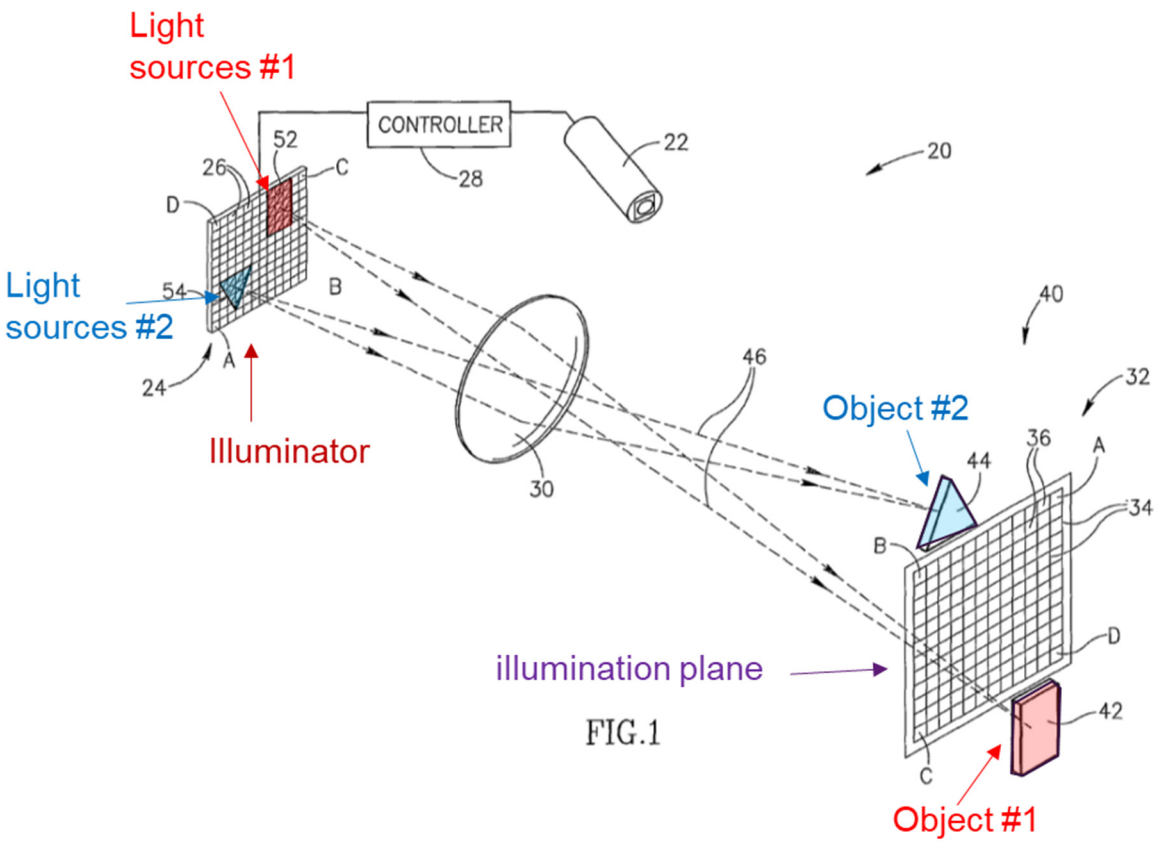

EX1005, FIG. 1 (annotated).

Braun discloses [1.A]. EX1003, ¶¶77-80.

3. [1.B]

Within Braun's scene ("*area to be lit*"), "[e]ach luxel 26 provides light that illuminates a **different region** of illumination plane." EX1005, Abstract, 2:7-13, 7:1-7, 15:3-9, FIGs. 1-2. "[T]he different regions of the illumination plane towards which light from different luxels is focused are **substantially** [] **non-overlapping**." *Id.*, 2:18-22, Abstract, FIGs. 1-2. **Each** mesh square 36 of the illumination plane "is illuminated by light from a **different, substantially only one**, luxel." *Id.*, 15:3-9, 16:6-14. FIGs. 1-2. Thus, each of Braun's luxels ("*each said source*") substantially

illuminates a different mesh square, object or region (collectively discloses the claimed "*sub-area*") within the scene ("*area to be lit*"). EX1003, ¶82.

For example, Braun's automotive headlight "provides intelligent adaptive illumination of a **roadway** and **neighboring** regions of the roadway" ("*different sub-area(s)*") within the roadway scene ("*area to be lit*"). EX1005, 5:19-26, 10:20-24, 13:9-17, 23:8-16, 23:28-29:12, FIGs. 5-6; EX1003, ¶83.

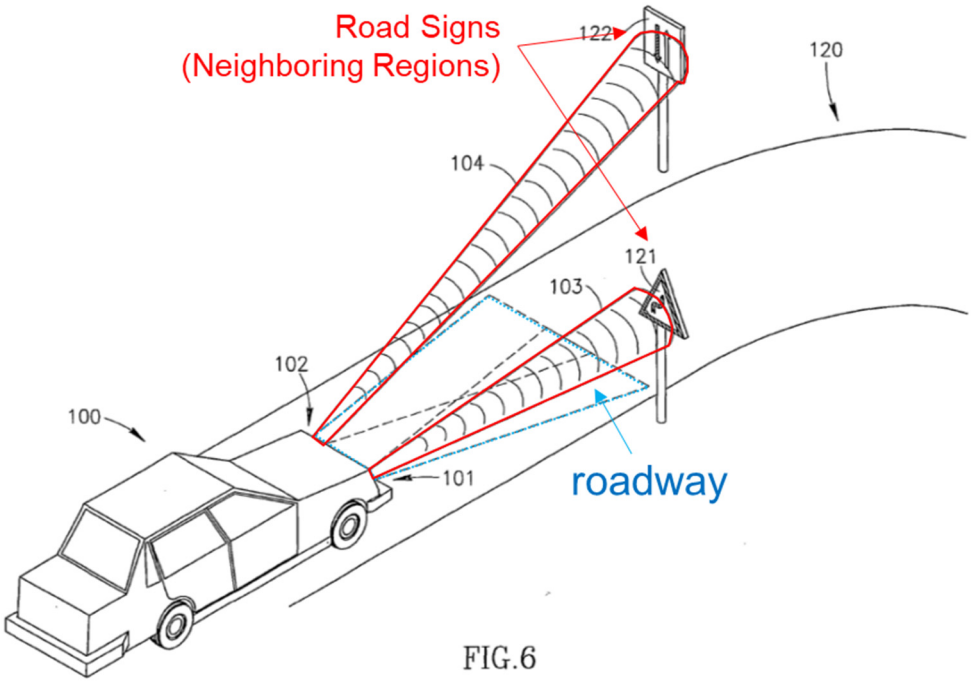

EX1005, FIG. 6 (annotated).

Braun's light bulb illuminates different pictures ("*different sub-area(s)*" with adjustable intensity and color. EX1005, 5:6-20, 27:27-32, 28:6-11, FIG. 8; EX1003, ¶83.

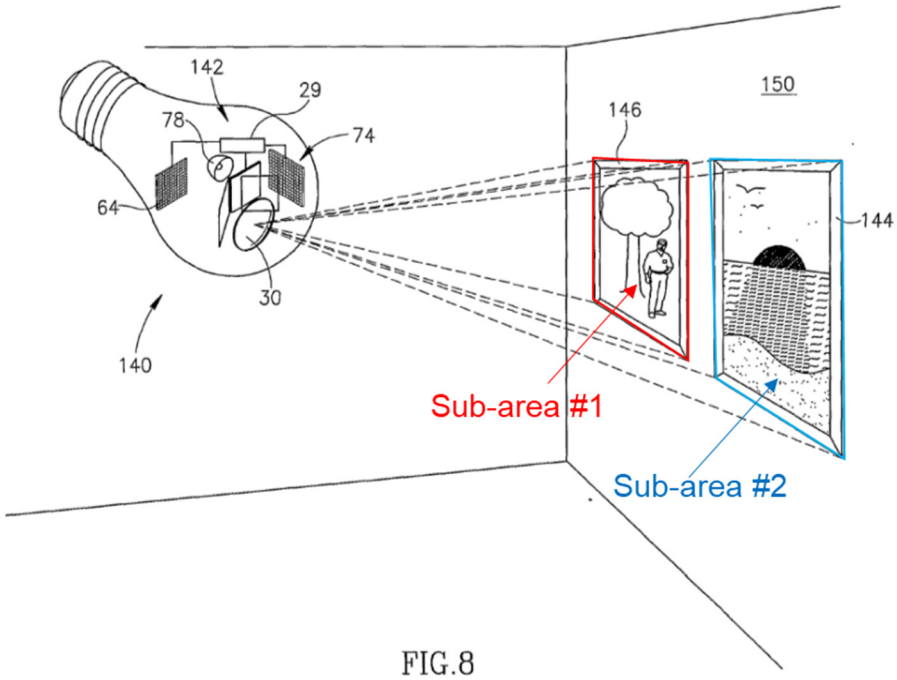

EX1005, FIG. 8 (annotated).

Braun discloses [1.B]. EX1003, ¶¶81-84.

4. [1.C]

Braun controls the luxels ("*light sources*") so that "**intensity**…is substantially proportional to the square of a distance from the array of luxels to a region of the scene illuminated." EX1005, 2:32-3:1, 5:11-15, 5:29-6:1, 9:4-9, 11:9-13, 15:30-33, 16:15-20, 17:1-4. The luxels "are controllable to provide visible light at different **wavelengths**." *Id.*, 11:26-30, 3:4-8, 9:19-28. The "**spectrum and intensity** of light provided by the luxels can be controlled to provide different color light." *Id.*, 9:29-10:4, 14:21-30. The luxels can be controlled "to provide different combinations of R, G and B light so as to control hue, saturation and intensity of light illuminating a scene." *Id.*

Braun discloses [1.C]. EX1003, ¶¶85-87.

5. [1.D]

Braun's system includes a **controller**. EX1005, 14:12-15, Abstract, FIGs, 1-5, 8.

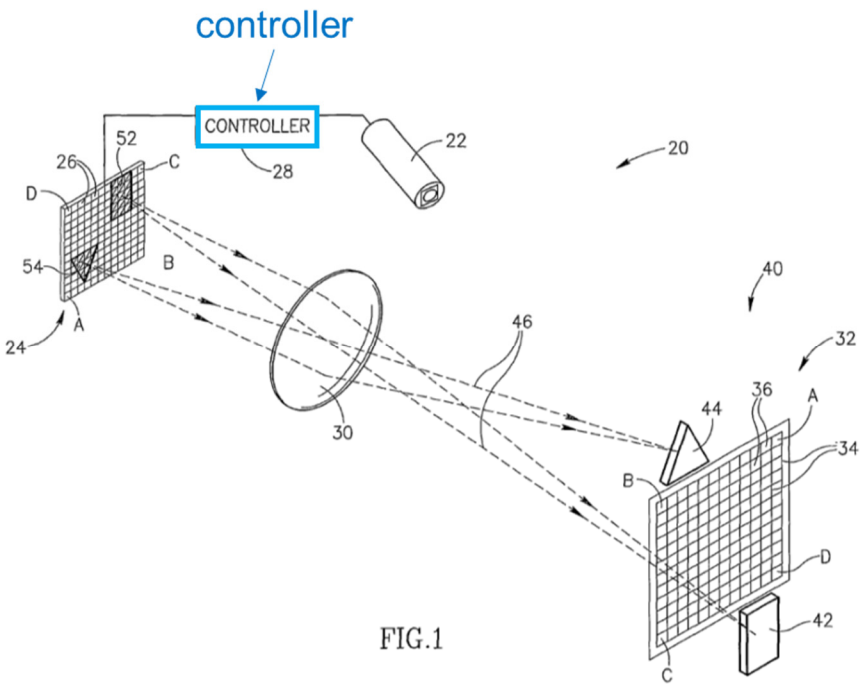

EX1005, FIG. 1 (annotated).

Braun's controller provides "different desired lighting effects." EX1005, 5:2-5, 7:1-7, 15:17-25, 16:21-24, 17:5-6. The controller "controls **intensity** of light provided by light providing regions [(luxels—"*light sources*")] responsive to distances determined by the range finder." *Id.*, 2:32-3:3, 9:4-9, 11:9-13, 15:30-16:5, 16:15-20, 24:5-12. The controller "controls intensity of R, G or B light provided by each light providing region so as to control **hue, saturation or intensity** of light illuminating a region of the scene," along with wavelength, to maximize visibility.

Id., 34:12-16, 3:4-8, 5:27-6:1, 9:29-10:4, 11:14-17, 24:13-18, 27:29-32, 11:26-30.

Braun discloses [1.D]. EX1003, ¶¶88-91.

6. [1.E]

Braun's illumination systems include range finders, e.g., 3D range-cameras ("*one or more detectors*"). EX1005, 2:7-18, 3:9-14, 3:28-4:20, 7:8-10, 14:12-15, 15:26-30, 17:7-25, 30:3-15, 34:26-28, Abstract, FIGs. 1-5, 8.

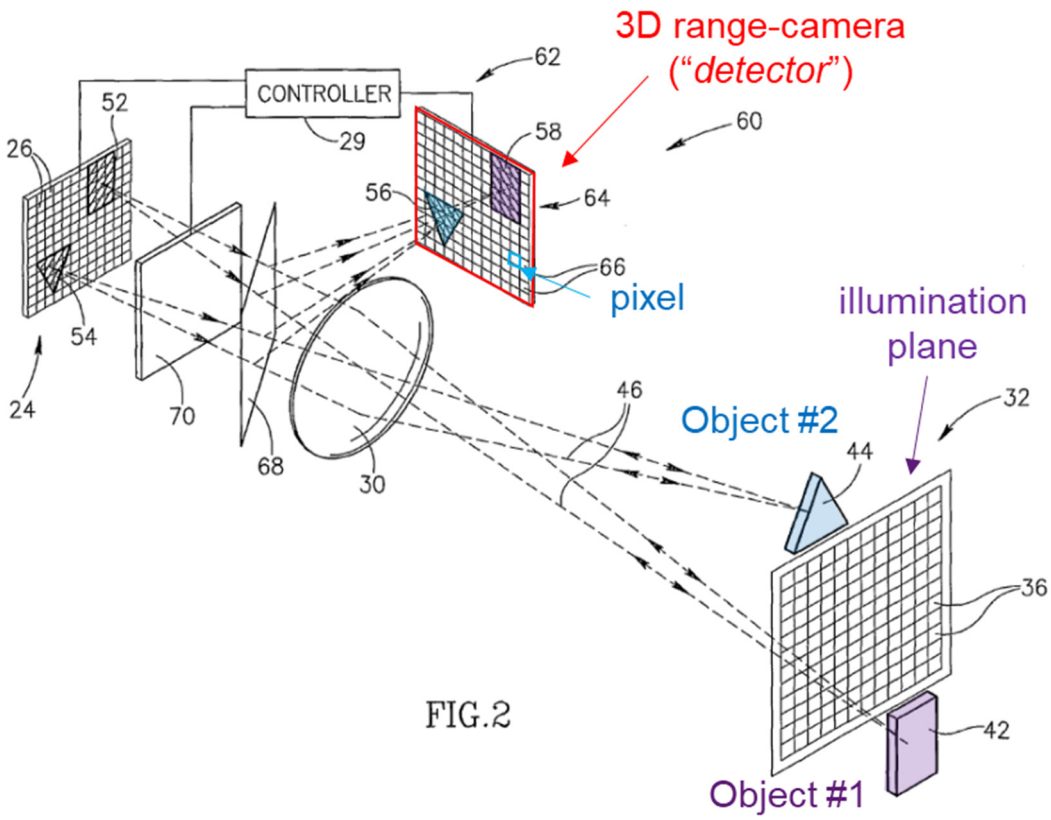

FIG.2

EX1005, FIG. 2 (annotated).

Braun's 3D range-camera senses the objects, surfaces or beings within the scene. EX1005, 4:6-9, 4:17-20, 18:24-19:8, 21:31-22:7, FIGs. 1-4. For example, "**objects** 42 and 44 are imaged on pixels 66 shown in shaded areas 56 and 58

respectively of photosurface 64" of the 3D range-camera. *Id.*, 18:24-19:8, FIG. 2. "Pixels 66 in shaded areas 56 and 58 of photosurface 64 **correspond to** luxels 26 in shaded regions 52 and 54 of illuminator 24 that illuminated **objects 42 and 44 respectively**." *Id*. Braun's camera also senses road signs, people, animals, and obstacles in the roadway. *Id.*, 4:6-9, 5:27-6:3, 7:11-14, 13:1-17, 16:15-20, 18:24-19:8, 21:31-22:16, 22:24-30, 23:8-16, 24:2-12, 26:31-27:4. Therefore, Braun's range finder (3D range-camera) provides "*specific sub-area location information*" of the objects in order to determine the distances to the objects. EX1003, ¶95.

Braun's 3D range-camera passes "*the sensed information*" to the controller. EX1003, ¶96. For example, the controller "controls the plurality of light providing regions to provide light for illuminating the scene **responsive to** distances determined by the range finder." EX1005, Abstract, 2:10-15, 7:1-7, 9:4-5, 12:3-10, 18:24-19:8, 32:5-8, 32:20-25, 33:1-3; 37:20-22; 39:18-20. The controller "identif[ies] features and/or objects **in images** of the scene formed on the photosurface" of the 3D range-camera and determines transverse or radial components of velocity of the feature that has different locations in the images acquired by the 3D range-camera. *Id.*, 8:11-31, 12:17-20, 12:26-33, 22:17-23.

Braun discloses [1.E]. EX1003, ¶¶92-97.

7. [1.F]

Although Braun does not use the word "*processor*," a POSA would have

understood that Braun's intelligent controller includes a processor. EX1003, ¶99. Braun's controller "**processes** images" to identify features and objects in the scene, e.g., road signs, oncoming vehicles, people, obstacles, pictures and colors. EX1005, 4:17-20, 9:33-10:1, 11:5-8, 11:14-17, 13:4-8, 22:17-23:7, 26:31-27:4. Braun's controller runs a pattern recognition application "using **algorithms**" to process images. *Id.*, 22:17-23, 4:17-20, 5:27-29, 6:4-7, 24:4-5. Braun's controller "comprises a **memory**" and "is **programmable**." *Id.*, 5:2-20, 5:31-6:1, 10:18-19, 17:5-6, 28:2-4, 28:16-18, 2:32-3:3, 9:6-9, 15:30-16:5, 16:15-20, 24:7-12. Braun's controller "**calculate[s]** how to adjust illumination to track objects and features of a roadway scene" based on the vehicle speed, the azimuth angle of the object with respect to the vehicle, and the distance from the object to the vehicle, etc. *Id.*, 24:28-25:19. Therefore, Braun's intelligent controller, which processes images, runs algorithms and application programs, and performs mathematical computation, includes a processor. EX1003, ¶99.

The '551 patent also explains that a processor can function as a controller and a controller may be "a processor which executes instructions from a memory medium." EX1001, 18:23-29, 7:8-32, 7:50-60. Therefore, it would have been obvious that Braun's illumination system includes the claimed "*processor*." EX1003, ¶100.

Braun's processor, included in its controller, "*process[es] the sensed*

information and determin[es] illumination requirements of the at least one of objects, surfaces and beings." For example, Braun's processor in the controller determines "intensity of light provided by a luxel [to be] substantially proportional to the square of a distance from the array of luxels to a region of the scene illuminated by the luxel." EX1005, 2:32-3:3, 16:15-20. Braun's processor "processes an image of the scene to determine color components of the scene" to "control hue, saturation or intensity of light illuminating the scene responsive to the determined color components." *Id.*, 5:11-20, 5:27-6:1, 9:33-10:4, 11:14-17, 24:13-21, 17:5-6, 28:6-11.

Braun renders [1.F] obvious. EX1003, ¶¶98-102; §VI.A.5.

8. [1.G]

Braun's controller/processor uses "a pattern recognition application that processes images…to identify features of the scene and objects in the scene." EX1005, 4:17-20, 5:27-6:7, 22:17-23:16, 24:4-5, 27:27-28, 31:31-33.

Braun discloses [1.G]. EX1003, ¶¶103-105.

9. [1.H]

Braun's processor in the controller determines illumination requirements of the objects and Braun's controller adjusts the light intensity and/or light spectrum of the light sources. §§VI.A.5, VI.A.7. Braun further describes that the controller is directed to "*adjust the light source* ***for that sub-area*** *to meet the specific illumination requirement*."

Braun independently controls the luxels ("*light sources*"), "each of which provides light that illuminates a different region of the scene," where the controller adjusts the "intensity of **light provided by a luxel** [to be] substantially proportional to the square of a distance from the array of luxels to **a region of the scene illuminated by the luxel**" (i.e., "*for that sub-area*"). EX1005, 2:32-3:1, Abstract; §§VI.A.1-VI.A.3. Each of Braun's luxels "*for that sub-area*" is adjustable by the controller to meet its specific illumination requirement because "a region of the illumination plane of the illumination system that is illuminated by a luxel [("*that sub-area*")] is imaged on **a single pixel** of the photosurface" of the 3D range-camera. EX1005, 4:6-8, 7:11-14, 18:30-19:11, 5:9-20, 27:27-32, FIGs. 2-3; EX1003, ¶108.

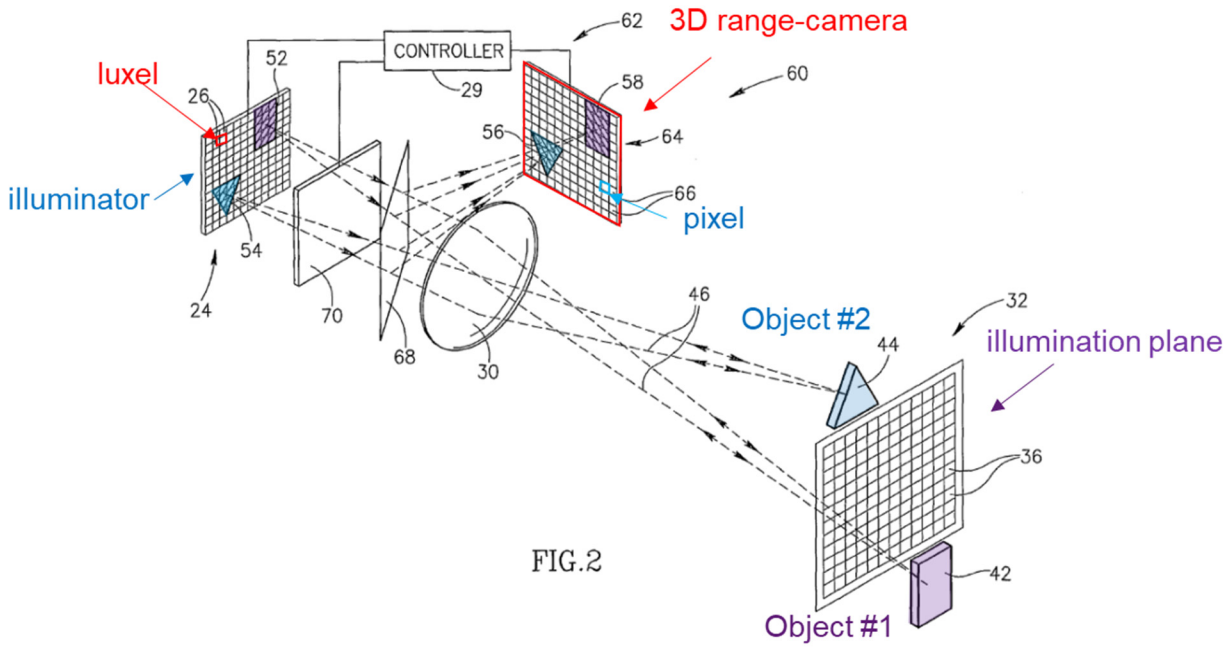

EX1005, FIG. 2 (annotated).

As an example, Braun's headlight "provides intelligent **adaptive** illumination of a roadway and neighboring regions of the roadway," such that the controller adjust the luxels for the identified road sign ("*that sub-area*") to meet the specific illumination requirement, by adjusting "hue, saturation and intensity of light" to "'spotlight' the [identified] road sign and improve its readability." EX1005, 5:21-6:3, 24:2-21; EX1003, ¶109.

Braun discloses [1.H]. EX1003, ¶¶106-110.

Thus, Braun renders claim 1 obvious. EX1003, ¶¶73-111.

B. Claim 2

Braun's 3D range-camera has "a gated photosurface having pixels and collecting optics that collects light from the scene and images the collected light on the photosurface." EX1005, 7:8-10, 3:15-21, FIGs. 1-5, 8. The photosurface of the 3D range-camera is "a CCD or CMOS light sensitive surface." *Id.*, 17:11-13. Therefore, Braun's 3D range-camera is "*a photo sensor array coupled with an optical lens*," and is also a photo sensor "sensitive to color." *Id.*, 11:14-17.

Braun renders claim 2 obvious. EX1003, ¶¶112-114.

C. Claim 3

Braun's illumination system "for general illumination of a **room**" can be programmed to "identify a particular object and/or **feature of its environment** and **selectively** illuminate the object or feature accordingly" with "different illumination effects." EX1005, 5:9-10, 28:6-9. Braun's light bulb adjusts illumination "so that

intensity of light illuminating each of the pictures is **substantially the same**." *Id.*, 5:11-15, 27:27-30, FIG. 8. It would have obvious that Braun's controller adjusts the light intensity when ambient light changes, e.g., when one of the pictures is illuminated by daylight and/or sunlight near a window and the other picture is not. EX1003, ¶116.

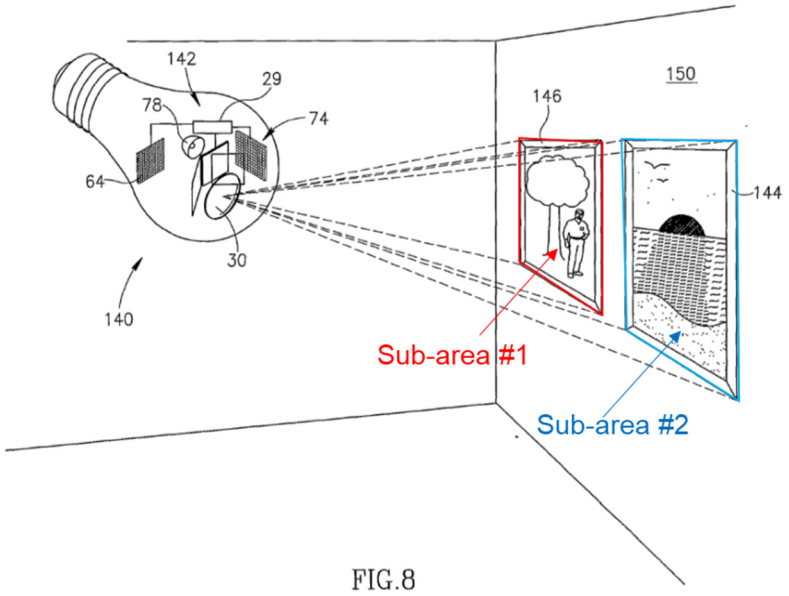

EX1005, FIG. 8 (annotated).

Although Braun does not explicitly describe detecting "*daylight and/or sunlight*," Braun's 3D range-camera has a "light sensitive surface," which detects "atmospheric effects," e.g., fog. EX1005, 25:20-25, 17:11-13. It would have been obvious that Braun's 3D range-camera detects daylight and/or sunlight, such that the intensity variations over the illumination area can be sensed by the pixels of the camera and Braun's controller can adjust the light intensity of each luxel ("*light source*") corresponding to the camera's pixel by "*taking into consideration the*

intensity variations over the area now illuminated by the daylight and/or sunlight."

EX1003, ¶117.

Braun renders claim 3 obvious. EX1003, ¶¶115-118.

VII. GROUND 2: BRAUN, ALONE OR IN VIEW OF DOWLING, RENDERS CLAIMS 4 AND 7 OBVIOUS

A. Motivation to combine Braun and Dowling

Braun "automatically adapt[s] the illumination to characteristics and features of the scene." EX1005, 1:3-5. Braun identifies features and objects of the scene (e.g., people) and controls its luxels in response. *Id.*, 4:17-20, 13:1-8, 16:27-32, 21:31-22:16, 26:29-27:1, 27:19-20. Braun also tracks the positions of the features and objects and adjusts the illumination accordingly. *Id.*, 10:8-11. While Braun's system can receive wireless signals, Braun does not explicitly describe details of such communication. *Id.*, 28:16-20. Thus, a POSA would have been motivated to look to prior art, e.g., Dowling, for such details. EX1003, ¶119.

Dowling provides techniques for receiving and transmitting data. EX1027, 6:14-16, 7:1-13. Dowling "integrat[es] illumination with data manipulation and transmission functions." *Id.*, 1:17-20, 4:9-22, FIGs. 2, 6. Dowling builds smart lighting networks from smart lighting devices "for communication purposes, building automation, systems monitoring, and a variety of other functions." *Id.*, Abstract, 8:18-21, FIGs. 9, 10.

A POSA would have been motivated to modify Braun's illumination system

to incorporate Dowling's transmitter 136, receiver 138 and input/output circuitry 160 (shown in Figure 5) to communicate with a network, such that the illumination system may send and receive data over any physical medium, wireless link, mobile devices, or computers. EX1003, ¶¶120-121; EX1027, 38:1-19, 14:1-16:15, FIG. 5. Braun and Dowling are both in the same field of illumination systems using LEDs, and address the same problem—providing smart or adaptive lighting for specific characteristics and features of the scene. EX1005, 1:3-5, 19:19-21; EX1027, 4:9-22, Abstract. Furthermore, a POSA would have combined the system of Braun with the teachings of Dowling by known methods (e.g., adding electronic components, e.g., transmitter/receiver, input/output circuitry), and the results of the combination would have been predictable to a POSA (e.g., Braun's illumination system having both lighting and specific communication capability). EX1003, ¶122. Finally, the proposed combination of Braun and Dowling would involve nothing more than incorporating a well-known concept (Dowling's transmitter, receiver, and input/output circuitry for communication) into a known system (Braun's illumination system). *Id.*; *KSR Int'l Co. v. Teleflex Inc.*, 550 U.S. 398, 419-421 (2007).

B. Claim 4

1. [4.A]

Braun's 3D range-camera provides images of the illuminated area for the pattern recognition application to identify features and/or objects that are of interest.

EX1005, 8:11-13, 22:17-23; §VI.A. Braun uses pattern recognition to "determine presence of a person**,**" "detect[] motion of the person" and "distinguish between types of behavior of a person" (e.g., walking vs. running). EX1005, 13:4-6, 22:24-30, 26:29-31:2, 21:31-22:16. Therefore, Braun's 3D range-camera "*detects information regarding one or more individuals within the illuminated area*." EX1003, ¶125.

As the '551 patent admits, pattern/image/facial recognition, neural networks and artificial intelligence were "**known in the art**" before the effective filing date of the '551 patent. EX1001, 41:8-11, 44:37-40, 44:63-45:22, 48:30-32, 63:9-12, 63:31-39, 63:41-46, 63:48-52, 64:5-9, 64:46-49, 69:25-29, 83:1-5; EX1002, 333-337; EX1014; §§IV.A, IV.B. During prosecution, Applicant clarified that the term "*age*" is not "the real age in terms of exact years," but only needs "a probabilistic guess that the image recognized person is belonging to group of people whose age is a factor in correct lighting practice." EX1002, 333. Applicant cited Schalkoff to show that "techniques for face recognition and training, learning and classification into common attribute sets such as age are known in the art." *Id.*, 335; EX1014, FIG. 2. Therefore, it would been obvious for a POSA to use Braun's pattern recognition to classify "*at least one of (i) age, (ii) sex, and (iii) recognition of an individual*" when the presence of the person is detected. EX1003, ¶126. For example, individuals can be classified into different age groups based on the "types of behavior" as described

in Braun, e.g., a younger group often walks or runs faster than an older group. *Id.*, ¶126.

Braun's controller "comprises a **memory**," which "is programmable to remember" the recognized objects. EX1005, 28:2-4. Braun's light bulb is "**preprogrammed** with **desired** functions and a menu of lighting effects." *Id.*, 28:12-13. Therefore, Braun stores data of the specific illumination requirement for "*that individual's needs*" in the memory such that the illumination condition for the person can be matched with the stored data. EX1003, ¶127. Braun's detected information is "*for matching with stored data about that individual's needs*."

Additionally, Dowling's camera "enables more complex, interactive functions" with individuals, "based on **identity** or a **general classification** scheme" determined by, e.g., "**face recognition**," such that the smart lighting system "moderate[s] access," "**matches the predetermined preference**," and "monitor[s] activity and locations of a building's occupants." EX1027, 22:20-23:6, 5:20-6:5.

2. [4.B]

In Braun, individuals "**choos[e]** a particular lighting effect or [desired] function from the menu … by transmission of wireless **signals** to the light bulb." EX1005, 28:12-20. Thus, Braun's controller adjusts the illumination based on wireless signals ("*commands*") received by the controller from a remote controller ("*input device*"). EX1003, ¶131. Braun's controller also adjusts the illumination

based on "*personal preferences input to the controller and stored in memory*." EX1003, ¶131; EX1005, 13:6-8, 22:2-16, 26:31-27:1, 27:19-20.

Braun, alone or in view of Dowling, renders claim 4 obvious. EX1003, ¶¶123-133; §VI.A.

C. Claim 7

Claim 7 depends on claim 6 which has been cancelled after the '815 reexamination in view of Stam PCT. EX1008, '815 Reexamination Certificate, 1:15; EX1012, 928-940, 958-968; EX1017, Stam PCT. Claim 7 was not reexamined. EX1008, 1:18; EX1012, 929.

Claim 6 recites similar features as claim 1. EX1001, 95:30-51, 96:17-31. In addition to Stam PCT, Braun, alone or in view of Dowling, renders claims 6 and 7 obvious.

1. [6.P]

Braun discloses [6.P]. §VI.A.

2. [6.A]

Braun's illumination system have a "monolithically integrated" structure. EX1005, 6:24-32, 28:24-32, FIGs. 5, 8. For example, Braun's light bulb can be "mounted in a chandelier." *Id.*, 6:29-32.

Braun discloses [6.A]. EX1003, ¶¶137-140.

3. [6.B]

Braun's luxels ("*light sources*") are incorporated in the structure of an

illuminator. EX1005, Abstract, FIGs. 1, 8. And it would have been obvious that Braun's luxels are "*in* communication *with a power source*" to "provide and control light by emission," with adjustable intensity, to be turned on/off to produce light pulse, etc. EX1003, ¶142; EX1005, 2:32-3:3, 3:23-24, 8:1-3, 9:4-9, 14:16-17, 14:27-28, 19:20-21. IESNA Handbook explains that LEDs "produce light by electroluminescence when low-voltage direct **current** is applied to a suitably doped crystal containing a p-n junction (Figure 1-18)." EX1013, 26, 265-267, FIG. 1-18 (schematics showing a battery); EX1022, 9:56-57, 10:48, FIGs. 1, 3, 6, 9, 22.

Furthermore, Dowling's smart lighting device includes lighting elements "coupled to an electrical connection, for emitting light," where the electrical connections 40 are "coupled to a power adapter [42]." EX1027, 5:12-17, 10:15-22, 12:9-18, FIG. 1.

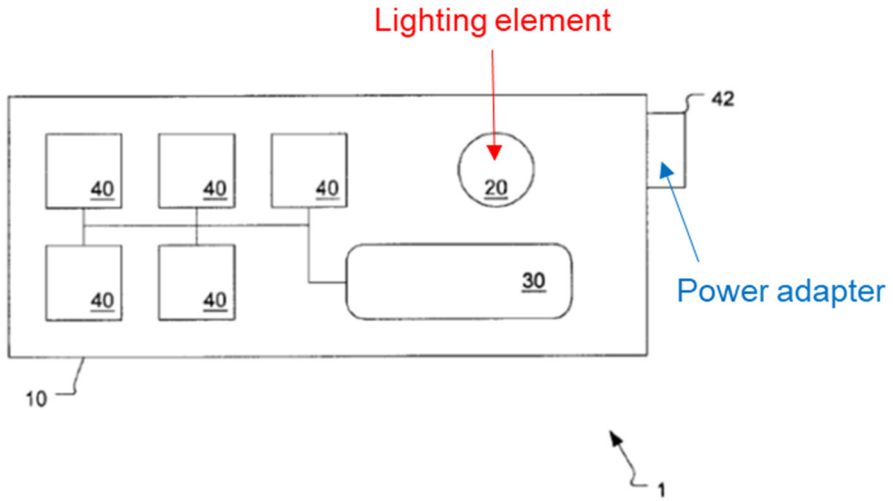

EX1027, FIG. 1 (annotated).

Braun, alone or in view of Dowling, renders [6.B] obvious. §VI.A; EX1003,

¶¶141-145.

4. [6.C]

A POSA would have understood that Braun's illumination system includes an "*electronic circuitry apparatus*" to provide current to the LEDs for light emitting and for adjusting the light intensity.[5] EX1003, ¶147; §VII.C.3; EX1005, 2:32-3:3, 3:23-24, 8:1-3, 9:4-9, 14:16-17, 14:27-28, 19:20-21.

Additionally, Dowling's smart lighting system includes "a light source 132 responsive to an illumination signal 134," and an input/output circuitry 160 "for transforming signals from the processor 140 into signals for the light source 132." EX1027, 38:1-19, 34:18-35:4, FIGs. 3, 5. The input/output circuitry 160 includes an LED driver "used to activate the LED." *Id.*, 36:16-17, 38:18-19, FIG. 3.

[5] During reexamination, the Office interpreted this term as a means-plus-function element, and identified an exemplary corresponding structure as "logic control electronics unit 7." EX1012, 929-939; EX1001, 25:34-52, FIG. 1. If this means-plus-function interpretation is adopted, the prior art still renders it obvious. EX1003, ¶¶146-149.

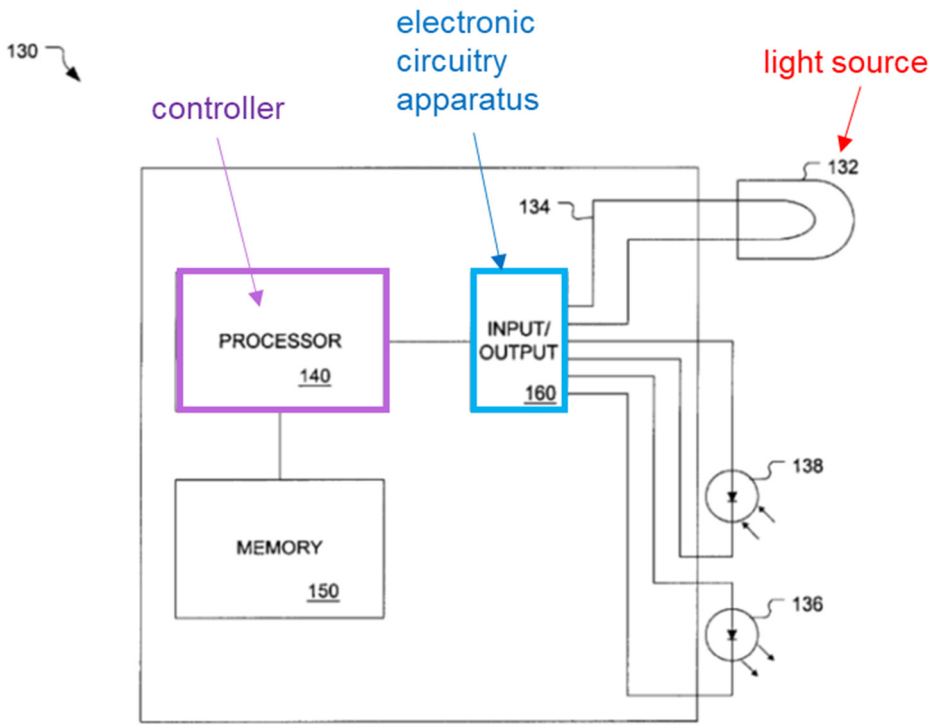

EX1027, FIG. 5 (annotated).

Braun, alone or in view of Dowling renders [6.C] obvious. EX1003, ¶¶146-149.

5. [6.D]

When Braun's illumination system (e.g., light bulb) is "mounted in a chandelier," its camera is also mounted in the chandelier structure. EX1005, 6:24-32.

Braun's camera "has a **circuit** controllable to turn on and turn off the pixel." EX1005, 4:10-16, 17:12-13; EX1039, Iddan, FIGs. 1A, 2-4. Thus, Braun's camera is "*in communication with power*." EX1003, ¶152; EX1047, 14-34.

Braun's controller controls camera to "acquire an image of the scene."

EX1005, 10:5-7, 8:15-18. Therefore, Braun's camera is also in communication with "*control device elements*." EX1003, ¶153; §VI.A.

Braun's illumination plane ("*illuminated area*") is represented by coordinates, "shown with a grid of mesh lines [] that divides the area of illumination plane 32 into square mesh regions 36." EX1005, 15:3-9, FIG. 2. Each pixel 66 "images substantially only and all of a different **single mesh region** 36 of illumination plane 32." *Id.*, 19:4-5. Therefore, Braun's camera detects "*coordinate-specific information about the illuminated area*." EX1003, ¶154.

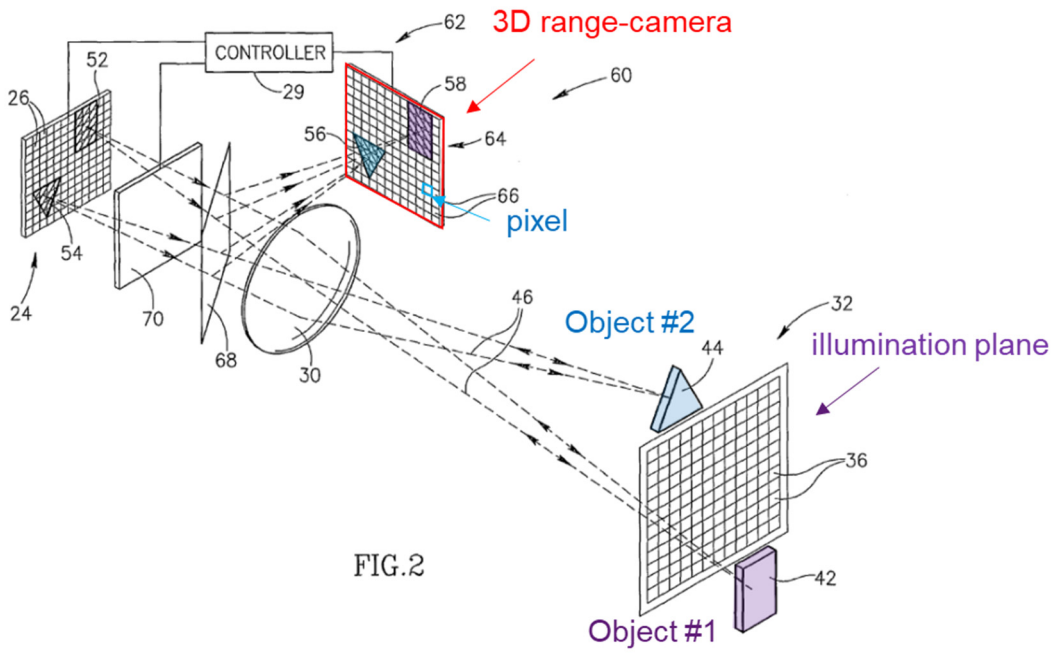

EX1005, FIG. 2 (annotated).

Braun discloses [6.D]. EX1003, ¶¶150-155.

6. [6.E]

Braun's illumination system can have "monolithically integrated structures."

EX1005, 6:24-26. Thus, Braun's controller is "*integrated with the structure*."

Braun's controller "*processes the information communicated from the camera and automatically control the light provided to the illuminated area*." §VI.A.

Braun's controller "controls the plurality of light providing regions to provide light for illuminating the scene responsive to distances determined by the range finder." EX1005, Abstract, 7:1-7. Because Braun's illumination system includes an "*electronic circuitry apparatus for the controlled powering of the light source*," it would have obvious that Braun's controller is "*in communication with the light source controlling power circuitry*" to adjust the intensity of the illuminator. EX1003, ¶159; §VII.C.4.

Braun renders [6.E] obvious.

Braun, alone or in view of Dowling, renders claim 6 obvious. EX1003, ¶¶136-161.

7. Claim 7

Braun's "*light sources are directional*." §VI.A.

Braun's controller "automatically adjusts illumination provided by the luxels to **prevent glare** … from blinding a driver of the oncoming vehicle." EX1005, 6:4-7, 12:17-20. It would have been obvious that Braun's 3D range-camera senses or derives "*a presence of glare on a person's eyes*" by measuring the amount of light reflected by the objects in the scene (e.g., driver's head), such that Braun's

controller adjusts the intensity of the luxels to reduce the glare. EX1003, ¶164; EX1005, 17:12-23, 3:15-21, 11:18-25, 18:9-23.

Braun, alone or in view of Dowling, renders claim 7 obvious. EX1003, ¶¶134-165.

VIII. GROUND 3: THE COMBINATION OF BRAUN, DOWLING, AND BAILEY RENDERS CLAIMS 8, 10-13 AND 15-18 OBVIOUS

A. Motivation to combine Braun, Dowling, and Bailey

Braun adapts illumination for identified objects by adjusting the intensity and color of the luxels ("*light sources*"). EX1005, 1:3-5, 2:32-3:1, 5:11-20, 5:29-6:1, 9:4-9, 9:29-10:4. Braun also adjusts the light sources to "match changes in the positions" of the objects. *Id.*, 10:8-11. However, Braun and Dowling do not explicitly describe how to mechanically adjust the light direction to track moving the object. Thus, a POSA would have been motivated to look to prior art, such as Bailey, for such details. EX1003, ¶166.

Bailey's array of LEDs are "supported on a flexible base or support structure which may be **selectively deflected** to effect focusing of a light beam." EX1035, 1:5-9, 1:26-32, 1:53-56, 1:63-2:10, 2:60-3:16, FIG. 2. Bailey connects an actuator to the flexible support base "to change the **directional** characteristics of light beams." *Id*. Bailey uses a "controller [] for varying the color and intensity of light," and "for varying the focus of the array of LEDs 22 by movement of the actuator 28 to deflect the flexible base 20." *Id.*, 3:66-4:8, 2:64-66, 3:1-5, FIG. 3.

Based on the teachings of Bailey and to the extent that a mechanical adjustment of the light emission direction would be needed (e.g., selectively focus the light beams), a POSA would have been motivated to modify Braun's illumination system by i) mounting at least a portion of Braun's luxels (LEDs) on one or more movable structures like Bailey's flexible base and ii) coupling an actuator to a respective movable structure to automatically control the direction of the light beams. EX1003, ¶¶167-168. The combined system is also compatible with modifications from Dowling by adding Dowling's transmitter 136, receiver 138, and input/output circuitry 160 to provide communication capability. *Id.*, ¶168.

A POSA would have been further motivated to combine Braun/Dowling and Bailey because all are in the same general field of illumination systems using LEDs, and address the same problem—providing smart or adaptive lighting. EX1005, 1:3-5, 19:19-21; EX1035, 1:53-2:10, 5:9-16, Abstract; §VII.A. Furthermore, a POSA would have combined Braun/Dowling's system with Bailey by known methods (e.g., mounting LEDs on flexible bases and connecting with actuators), and the results of the combination would have been predictable to a POSA (e.g., Braun's light beams can be selectively focused according to the bending of the flexible base that each luxel is mounted on). EX1003, ¶169. Finally, the proposed combination of Braun/Dowling and Bailey would involve nothing more than incorporating a well-known concept (Bailey's flexible base and actuator) into a well-known system

(Braun/Dowling's illumination system). *Id.*, ¶169; *KSR Int'l Co. v. Teleflex Inc.*, 550 U.S. 398 at 419-421.

B. Claim 8

1. [8.P]

Braun explains that objects "illuminated so that they **contrast strongly** with their local background tend to capture our attention." EX1005, 1:8-9. Braun "control[s] hue, saturation or intensity of light illuminating **a region of the scene** which is illuminated by light from the light providing region **independently** of hue saturation and intensity of light illuminating **other regions of the scene**." *Id.*, 34:12-16, 5:15-20. Therefore, Braun discloses different sub-areas of the illuminated area need to be illuminated differently. §VI.A.

Braun's illumination system provides lights for "*visual activities*" (e.g., viewing pictures and roadway scene). EX1005, 5:11-20, 5:21-26, FIGs. 6, 8. Braun's controller maximizes visibility. *Id.*, 11:26-30.

Braun discloses [8.P]. EX1003, ¶¶171-174; §VI.A.

2. [8.A]

Braun discloses [8.A]. §VI.A.

3. [8.B]

Bailey's LED array is "supported on a **flexible** base member." EX1035, Abstract, 1:6-10, 1:67-2:4, 2:58-63, FIGs. 1-5. "The flexible support base is operably connected to an actuator which may be controlled to deflect the base to

change the **directional** characteristics of light beams being projected by each LED so that the resultant or collective light beam generated by the apparatus may be focused or concentrated on a target distant from the apparatus." *Id.*, 2:4-10, 1:63-67, FIG. 2.

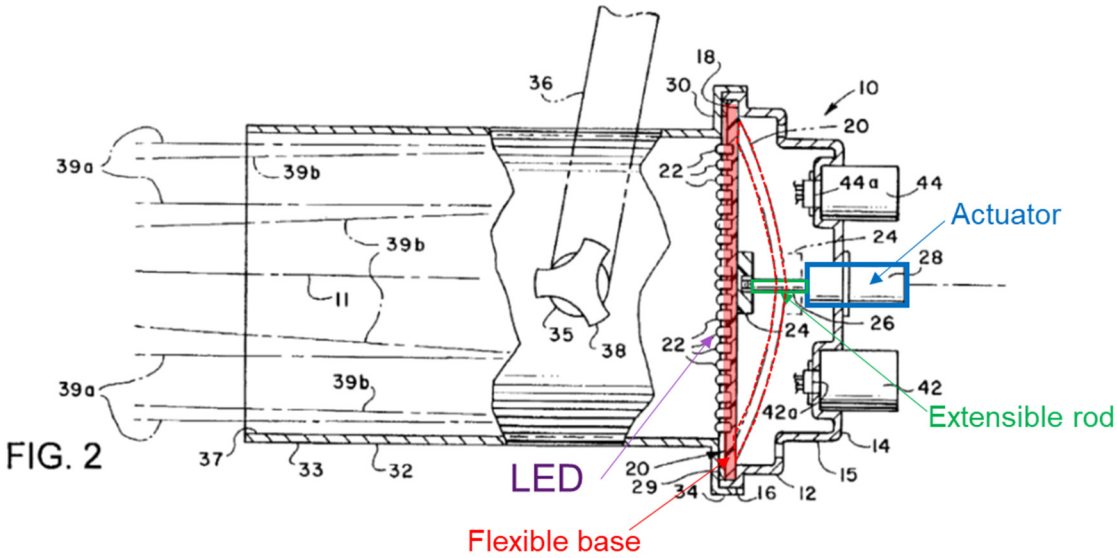

EX1035, FIG. 2 (annotated).

"[W]hen the support base 20 is in the position shown by the solid lines in FIG. 2," light beams generated by the LEDs 22 "project[] substantially parallel light beams 39a." EX1035, 3:39-49, FIG. 2. "[W]hen the base 20 is deflected to the position shown by the alternate position lines in FIG. 2…the axes of the light beams being projected by the LED array may be altered to generally follow the beam path lines 39b." *Id.*

In the combined system of Braun and Bailey ("Braun-Bailey") or Braun, Dowling and Bailey ("Braun-Dowling-Bailey"), i) at least a portion of Braun's

luxels are mounted on one or more Bailey's flexible bases 20 for "*aiming the directional light sources mounted thereon in a defined direction*," and ii) Braun's controller controls one or more Bailey's actuators 28 connected to the one or more flexible bases. EX1003, ¶179; §VIII.A.

Braun-Bailey renders [8.B] obvious. EX1003, ¶¶176-183.

4. [8.C]

Braun discloses [8.C]. §§VI.A, VI.B.

5. [8.D]

Braun's controller, "adjusts light provided by the light providing regions to **match changes in the positions** of one or both of features and objects in the scene relative to their positions…." EX1005, 10:8-11, 12:7-10. Indeed, Braun "**tracks** objects and features" to provide desired illumination patterns. *Id.*, 24:32-25:2, 25:16-18, 1:22-30. A POSA would have understood that Braun's controller adjusts the direction of illumination according to the position of the object. EX1003, ¶186.

Also, in Braun-Bailey, Braun's luxels (LEDs) are mounted on one or more movable structures (Bailey's flexible bases 20), where Braun's controller adjusts the position of the one or more movable structures through one or more actuators and thereby adjusts "*a direction of each of the directional light sources*" mounted on the respective movable structures. EX1003, ¶187.

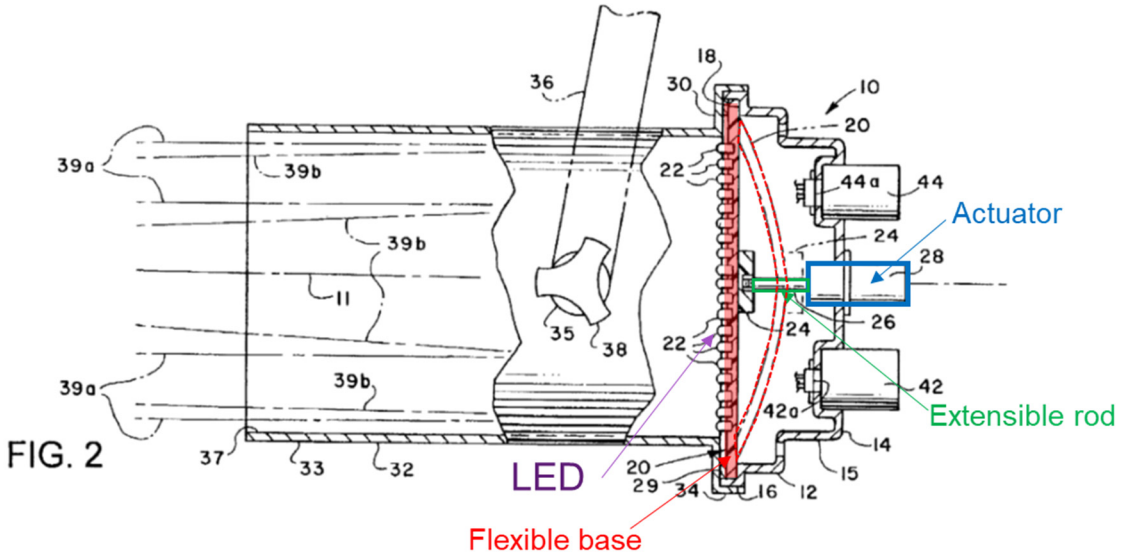

EX1035, FIG. 2 (annotated).

Braun or Braun-Bailey renders [8.D] obvious. EX1003, ¶¶185-188; §VI.A.

6. [8.E]

Braun's controller/processor uses "a pattern recognition application that processes images…to identify features of the scene and objects in the scene." EX1005, 4:17-20, 5:27-6:3, 6:4-7, 22:17-23:16, 24:4-5, 27:27-28, 31:31-33, 13:1-8, 21:31-22:16, 26:29-27:4, 3:15-21, 7:8-10, 17:7-9, FIG. 2. Braun's controller "identifies **position** of an image of the object in an image of the scene at different times," for example, "identifies a feature of the scene that has a **location** in the second image different from its location in the first image." *Id.*, 4:29-31, 8:15-18, 22:31-23:3. "[F]ollowing the acquisition of each image, the controller adjusts light provided by the light providing regions to **match changes in the positions** of one or both of features and objects in the scene relative to their positions in an immediately

preceding image of the scene." *Id.*, 10:8-11, 12:7-10.

Dowling's processor executes a predetermined program to monitor the flow of people and vehicles such that traffic flow and traffic patterns can be determined. EX1027, 10:19-22, 13:17-22, 20:3-15; EX1003, ¶191.

Braun, alone or in view of Dowling, renders [8.E] obvious. §§VI.A, VII.B; EX1003, ¶¶189-192.

7. [8.F]

Although Braun and Bailey do not explicitly describe the processor calculating the required illumination parameters "*according to best practice standards*," the '551 patent admits that "best lighting practices [is] recommended by lighting engineers and published in handbooks such as the Illuminating Engineering Society of North America IESNA and standards such as ANSI or CIE." EX1001, 61:67-62:9. IESNA Handbook "has numerous recommendations and best practice standards specifically related to LED lighting." *Id*. Indeed, IESNA Handbook provides general lighting design guide for various applications, for example, for theater, residential, exterior, roadway, and emergency lightings. EX1013, 441-479, 485-644. IESNA Handbook points out that "the International Electrotechnical Commission (IEC) and European Committee for Electrotechnical Standardization (CENELEC) have developed standards to minimize risks of eye injury from use of products containing LEDs," which "include maximum permissible exposure (MPE)

levels and required testing methods for products using LEDs, as well as eye safety labeling recommendations based on the amount and type of emission produced by these products." *Id.*, 174. IESNA Handbook also includes various lighting calculations. *Id.*, 351-422. Thus, it would have been obvious to a POSA to calculate the required illumination parameters "*according to best practice standards*" available, e.g., in the IESNA Handbooks. EX1003, ¶194.

Braun renders [8.F] obvious. EX1003, ¶¶193-195; §VI.A.

Braun-Dowling-Bailey renders claim 8 obvious. EX1003, ¶¶170-196.

C. Claim 10

Braun's controller "adjusts light provided by the light providing regions to match **changes in the positions** of one or both of features and objects in the scene relative to their positions in an immediately preceding image of the scene." EX1005, 10:8-11. "[A] **time lapse** between acquisition of the image and a time at which the illuminator provides light adjusted responsive to the image is **sufficiently short** so that during the time lapse the positions of features and/or objects of the scene do not change sufficiently to generate a substantial mismatch between the illumination and the scene." *Id.*, 10:12-17. Thus, Braun's controller receives "*real time information*" from the camera. EX1003, ¶199.

Braun-Dowling-Bailey renders claim 10 obvious. §§VI.A, VIII.B; EX1003, ¶¶197-200.

D. Claim 11

Braun-Dowling-Bailey renders claim 11 obvious. §VIII.B; EX1003, ¶¶201-202.

E. Claim 12

Braun's controller uses the pattern recognition application to identify and track the position of an object from images acquired at different times. EX1005, 22:31-23:3, 24:32-25:2, 25:16-18. The controller adjusts light "to **match changes in the positions"** of features and objects in the scene. *Id.*, 10:8-11, 12:7-10. Braun's illumination system "control[s] illumination of the scene **responsive to moving** regions of the scene and/or to components of their velocity of motion." *Id.*, 21:17-20.

Specifically, Braun "detects motion of the person," and the controller "control[s] illumination of the area to **illuminate the person**." EX1005, 21:31-22:16. Braun's illumination system also "distinguish[es] between types of behavior of a person," e.g., walking or running, and "illuminate[s] the person **responsive to his or her behavior**." *Id*. Indeed, the "illumination device is controllable to **follow** the actor as he or she moves on the stage and illuminate the actor accordingly." *Id.*, 1:22-30; EX1036, Abstract, FIG. 5.

In Braun-Dowling-Bailey, Braun's controller tracks people and adjusts the direction of the light sources "*such that they provide the required illumination in a sub-area proximate to the individuals as they move around in the illuminated area*."

EX1003, ¶205; EX1027, 17:16-18:11, 21:10-16, 25:11-26:4, 26:16-19.

Braun-Dowling-Bailey renders claim 12 obvious. EX1003, ¶¶203-206;§§VI.A, VIII.B.

F. Claim 13

Braun's headlight illuminates "a roadway and neighboring regions of the roadway." EX1005, 5:21-26. Braun's system also spotlights road signs, improving readability. *Id.*, 5:29-6:3.

Braun-Dowling-Bailey renders claim 13 obvious. EX1003, ¶¶207-209.

G. Claim 15

Braun programs light bulb with a menu of functions and lighting effects "by **transmitting signals** to the light bulb," via wires or wirelessly. EX1005, 28:12-20. Also, "choosing a particular lighting effect or function from the menu is accomplished by transmission of **wireless signals** to the light bulb." *Id*. When a person or obstacle is detected by the 3D range-camera, the controllers of Braun's headlights generate signals "to a **visual or audio display** inside the vehicle to cue the driver to road conditions." *Id.*, 26:29-27:4, 27:5-20. Each headlight has its own controller, where "a slave controller [is] subordinate to… a master controller," which "**coordinates** light provided by illuminators 116 of headlights." *Id.*, 23:17-24:1, FIGs. 5-7. Therefore, Braun's controller has "*communication capability to other devices*" (e.g., a remote controller, visual/audio display, another headlight). EX1003, ¶211.

Dowling couples smart lighting devices "together to form networks," where "[d]ata may be transmitted **between smart lighting devices**." EX1027, 14:1-17, 8:18-21, 21:10-16, Abstract, FIGs. 2, 6.

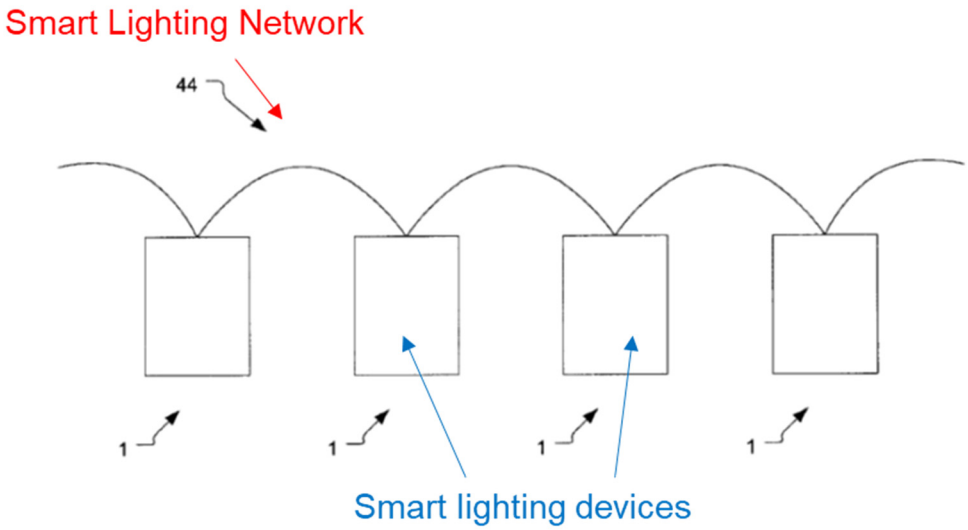

EX1027, FIG. 2 (annotated).

Each smart lighting device "permit[s] communication between the components [40] and the microprocessor [30], e.g., to permit control of the lighting element [20] based on input from **sensor** components, or facilitate electronic **communication** by mediating the transmission of signals **to or from other devices**." EX1027, 4:17-22, 10:15-22, 12:19-13:22, 16:17-18, 40:1-13, FIGs. 1, 5; EX1003, ¶¶212-214. Dowling's smart lighting elements "operate as a platform to support the collection, **exchange**, and interpretation of **sensor information** available throughout a network." EX1027, 23:22-24:4, 40:20-41:2, 48:6-18, FIGs. 6, 10.

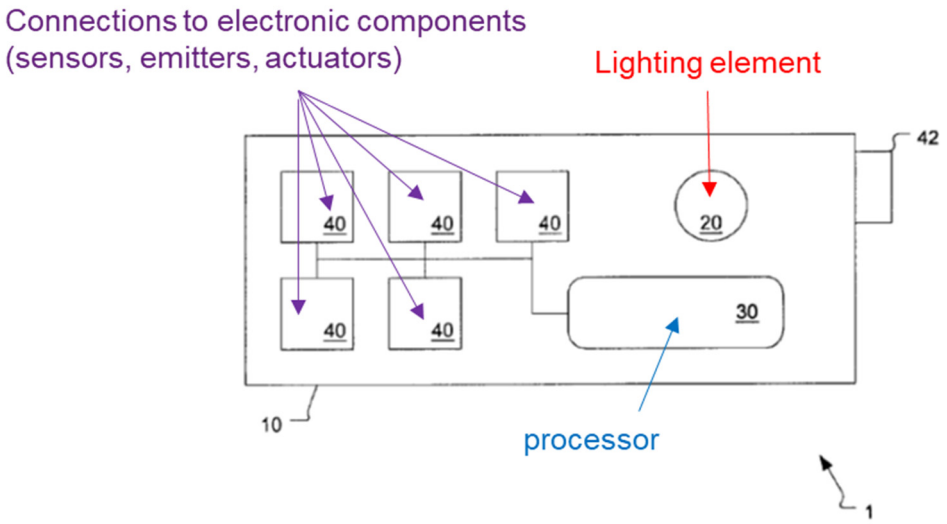

EX1027, FIG. 1 (annotated).

In Braun-Dowling-Bailey, multiple illumination systems of Braun and Bailey can be coupled together to form a network similar to Dowling's network in Figures 2 and 6. EX1003, ¶215. As such, the smart lighting network based on Braun-Dowling-Bailey can be used for various communications, e.g., traffic monitoring in public streets. *Id.*

Braun-Dowling-Bailey renders claim 15 obvious. EX1003, ¶¶210-216.

H. Claim 16

Braun's headlights illuminate "roadway scene," and are coordinated through the master controller. EX1005, 10:20-24, 23:17-24:1; §VIII.G. Dowling's smart lighting elements may be placed in "public streets." EX1027, 20:3-6. The "*second device*" of Dowling's smart lighting network is "*a lighting fixture*." §VIII.G.

Braun-Dowling-Bailey render claim 16 obvious. EX1003, ¶¶217-220.

I. Claim 17

Through coordination of master/slave controllers, Braun's headlights identify oncoming vehicles and adjust illumination to **prevent glare**, or alert drivers with "intense flashing red light" when vehicles closing too quickly. EX1005, 6:4-15, 12:17-20, 23:28-24:1, 26:18-28, FIGs. 5-7; EX1003, ¶¶222-223.

Dowling's smart lighting elements placed in public streets "**monitor the flow of people, vehicles**." EX1027, 20:3-15; EX1003, ¶224. The smart lighting elements "determine the number of people or objects which pass by the unit, the speed at which the people or objects pass the unit," and "[t]he collected data may then be analyzed, e.g., using a processor connected to the smart lighting network … to determine **traffic flow**, **traffic patterns**, points of congestion," and to "help redirect traffic flow or ease passage and congestion." *Id*. The smart lighting network "may continuously monitor" the public space and the resulting information "can be used to reveal traffic flow, provide feedback … **assess the effects of … lighting**." EX1027, 24:5-15.

Braun-Dowling-Bailey renders claim 17 obvious. EX1003, ¶¶221-225.

J. Claim 18

Braun adjusts illumination to prevent glare on approaching vehicle. EX1005, 6:4-7. Adjusting cut-off angle/level to reduce glare is well-known. EX1003, ¶228; EX1013, 311; EX1030, Westermann, 9, 14-18; EX1032, NHTSA Survey, 41, 85, 87.

Braun-Dowling-Bailey renders claim 18 obvious. EX1003, ¶¶226-229.

IX. GROUND 4: BEGEMANN AND LEE RENDER CLAIMS 1-4 OBVIOUS

A. Rationale for combining Begemann and Lee

Begemann's luminaire includes lighting modules, each with a set of lighting units that "illuminate respective portions of an object." EX1006, Abstract. Begemann's luminaire can be used "for street lighting, [or] for lighting a portion of a street." *Id.*, 1:9-12. Begemann's lighting modules "are connected to a control system" to adjust their settings according to weather/road conditions (e.g., rain, snow, fog), traffic density, and approaching vehicles. *Id.*, 8:58-9:29. Begemann leaves to a POSA how its system identifies weather/road conditions, traffic density, and approaching vehicles, and how "the lighting situation…can be automatically adapted to the circumstances" when used in an interior environment. *Id.*, 1:30-32, 4:47-5:3. Thus, a POSA would have been motivated to look to prior art, e.g., Lee, for such details. EX1003, ¶230.

Lee "provide[s] automatic setting of conditions or ambiance [e.g., lighting] in a local environment, such as a home." EX1026, 1:10-12, 2:37-46. The processor of Lee's control unit includes "known image recognition software loaded therein that analyzes the image data received from camera." *Id.*, 5:56-6:37, 4:48-5:6, FIGs. 2-3. Lee's control unit "processes the images to identify…persons located in one or more of the regions," and "automatically generates a control signal for at least one of the

servicing components associated with the region" according to the preference of the identified persons. *Id.*, Abstract, 2:55-58, 13:32-42.

Based on the teachings of Lee, a POSA would have been motivated to modify Begemann's lighting system to i) incorporate Lee's digital camera for obtaining the images of the illumination area such that Begemann's control system receives signals from the camera just like receiving signals 551, 552 from other sensors as shown in Figure 12, and ii) incorporate Lee's image recognition software into Begemann's control system for processing the images such that objects (people, rain, snow, fog, traffic density, approaching vehicles) can be identified. EX1003, ¶¶231-232; EX1006, 8:38-9:29, FIG. 12.

Begemann and Lee are in the same field of lighting systems, and address the same problem—automation of lighting. EX1006, 4:48-5:3; EX1026, 1:10-12, 2:37-46. Furthermore, a POSA would have combined the system of Begemann with the teachings of Lee by known methods (e.g., installing Lee's camera and image recognition software in Begemann's lighting system), and the results of the combination would have been predictable to a POSA (e.g., Begemann's lighting system capable of identifying objects such as people, vehicles, etc.). EX1003, ¶233. Finally, the proposed combination of Begemann and Lee would involve nothing more than incorporating a well-known concept (image recognition) into a well-known system (Begemann's lighting system). *Id.*; *KSR Int'l Co. v. Teleflex Inc.*, 550

U.S. 398, 419-421 (2007).

B. Begemann, alone or in view of Lee, renders independent claim 1 obvious.

1. [1.P]

Begemann's luminaire (1) has "at least one lighting module (2)," where each lighting module "comprises a set of lighting units (20) which each comprise at least an LED chip (30)." EX1006, Abstract, 1:33-40, 5:36-57, FIGs. 1A-1B, 2-3. Begemann's luminaire can be used for "interior lighting," or mounted "on posts 515 along a street." *Id.*, 5:40-42, 4:66-5:3, 8:42-45, FIGs. 11, 12.

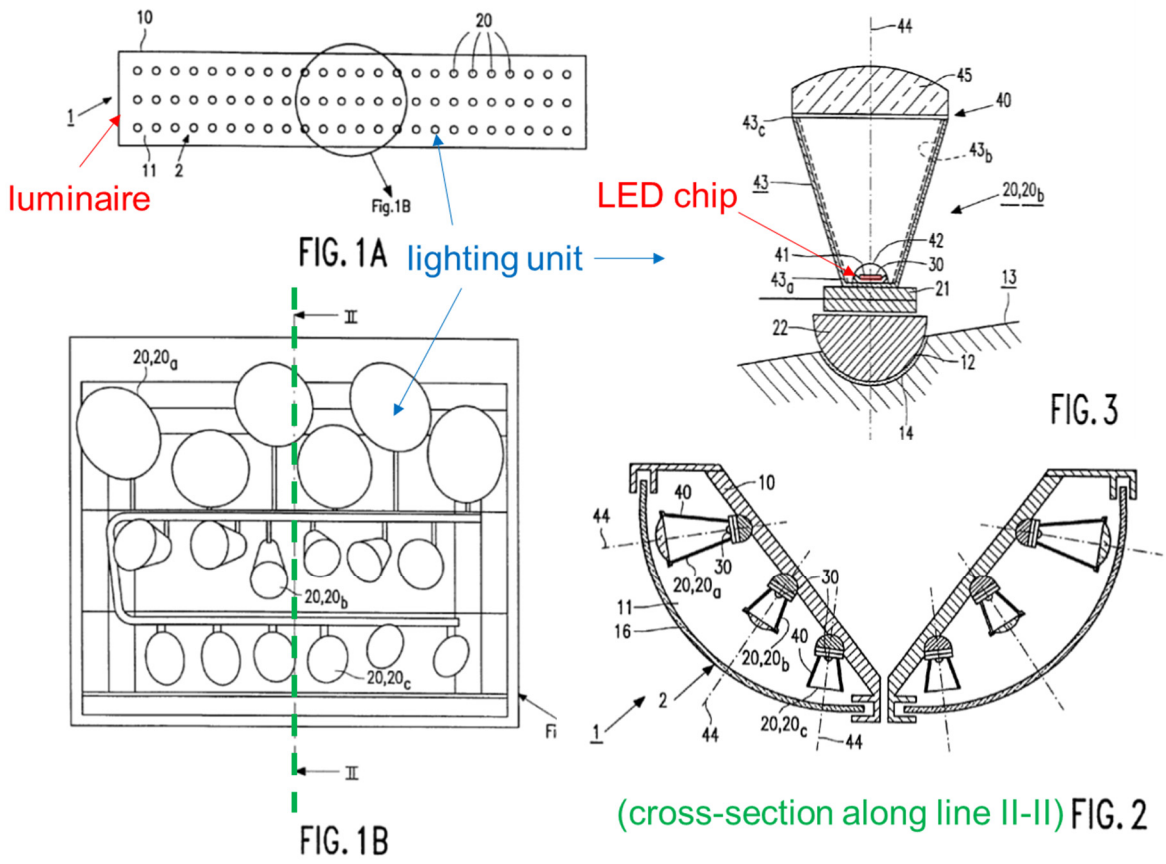

EX1006, FIGs. 1A-1B, 2, 3 (annotated).

Begemann's lighting units "illuminate **respective portions** of an object."

EX1006, Abstract, 1:49-56. Begemann's "lighting situation, for example the light distribution, illuminance, or colour temperature, can be **automatically adapted** to the circumstances." *Id.*, 1:62-65, 4:53-57. Therefore, Begemann's luminaire ("*light fixture*") illuminates an object ("*an area to be lit*") and is "*capable of automatically meeting specific illumination requirements of different sub-areas within the area to be lit*."

Begemann discloses [1.P]. EX1003, ¶¶235-238; *see also* §IV.E.1.

2. [1.A]

Begemann's LED chip "suppl[ies] a luminous flux of at least 5 lm during operation." EX1006, 1:33-40, Abstract, FIGs. 1A-1B, 2-3. Begemann's lighting units, each of which includes one or more LED chips, are "*light sources*." EX1003, ¶240; §IV.E.2.

LEDs are point source approximations—light generated can be "easily and accurately **concentrated** into a beam," which "may be **narrow**, so that they can be **aimed** with high accuracy." EX1006, 1:49-56, FIG. 2, 6:21-37, 2:8-12; EX1003, ¶241. Therefore, Begemann's lighting unit outputs "*directional*" light.

"[L]ight sources of the luminaire can be controlled independently of one another so as to illuminate a road section optimally both in wet and in dry weather." EX1006, 1:19-22. Begemann adjusts light distribution "through a **control** of the luminous fluxes of lighting modules or of **separate lighting units** of a lighting

module." *Id.*, 1:62-65, 8:38-9:29, 4:48-5:3, 10:58-62. Begemann's lighting units "comprises **two or more varieties of lighting units** for illuminating portions of the object with mutually differing spectra," which are "**adapted** to the optical properties, for example the reflectivity, of the individual portions of the object, so that an optimum visibility of these portions is realized." *Id.*, 2:54-62, 3:5-16. Therefore, Begemann's lighting units are "*independently controllable*."

Begemann discloses [1.A]. EX1003, ¶¶239-243.

3. [1.B]

Begemann's "lighting units illuminate respective portions of an object," particularly, "illuminate **portions of the object remote from one another**." EX1006, 1:33-40, 2:12-15, 5:55-56, Abstract. Each LED chip of Begemann's lighting unit provides an "individual beam **only hitting a portion of the object**." *Id.*, 1:49-56. For example, portions of the road section d illuminated by the luminaire (mounted at position x=0, y=0) are "marked with a triangle (Δ), a circle (o), and a dot (•)" corresponding to three different types of lighting units. *Id.*, 6:45-54, 5:40-50, 3:5-24, 8:9-32, FIGs. 4, 11.

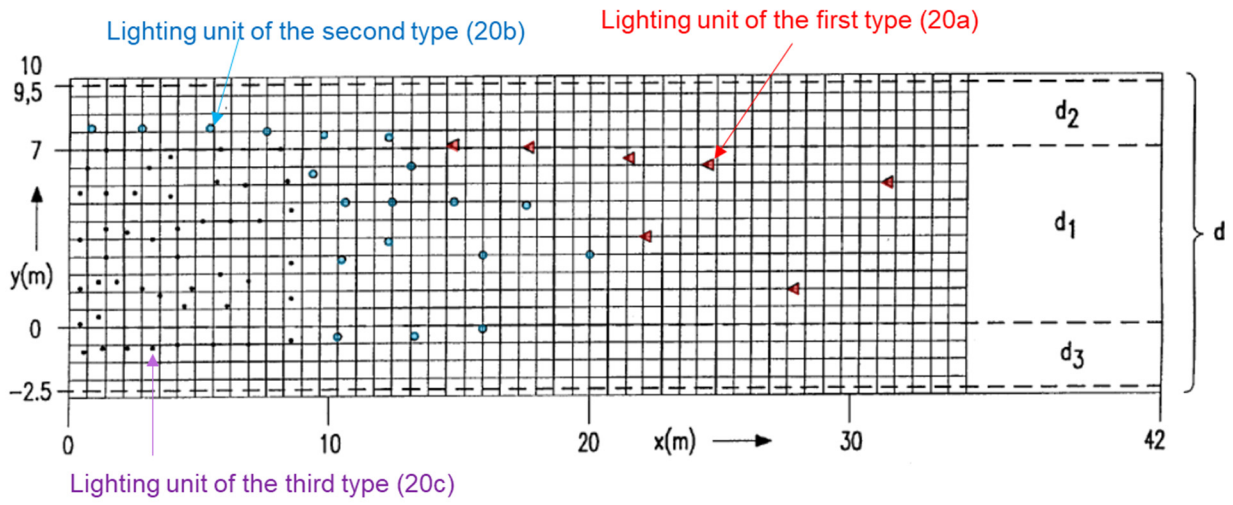

FIG. 4

EX1006, FIG. 4 (annotated).

Begemann's luminaire 501_a having "six lighting modules 502_{fI}, 502_{fII}, 502_{cI}, 502_{cII}, 502_{bI}, and 502_{bII}, each fitted with 24 lighting units," and "are designed for illuminating road sections" f_I, f_{II}, c_I, c_{II}, b_I, b_{II}, respectively, where the lighting modules "are connected to a control system 550 and are controllable independently of one another." EX1006, 8:45-60, 8:9-35, FIGs. 11, 12.

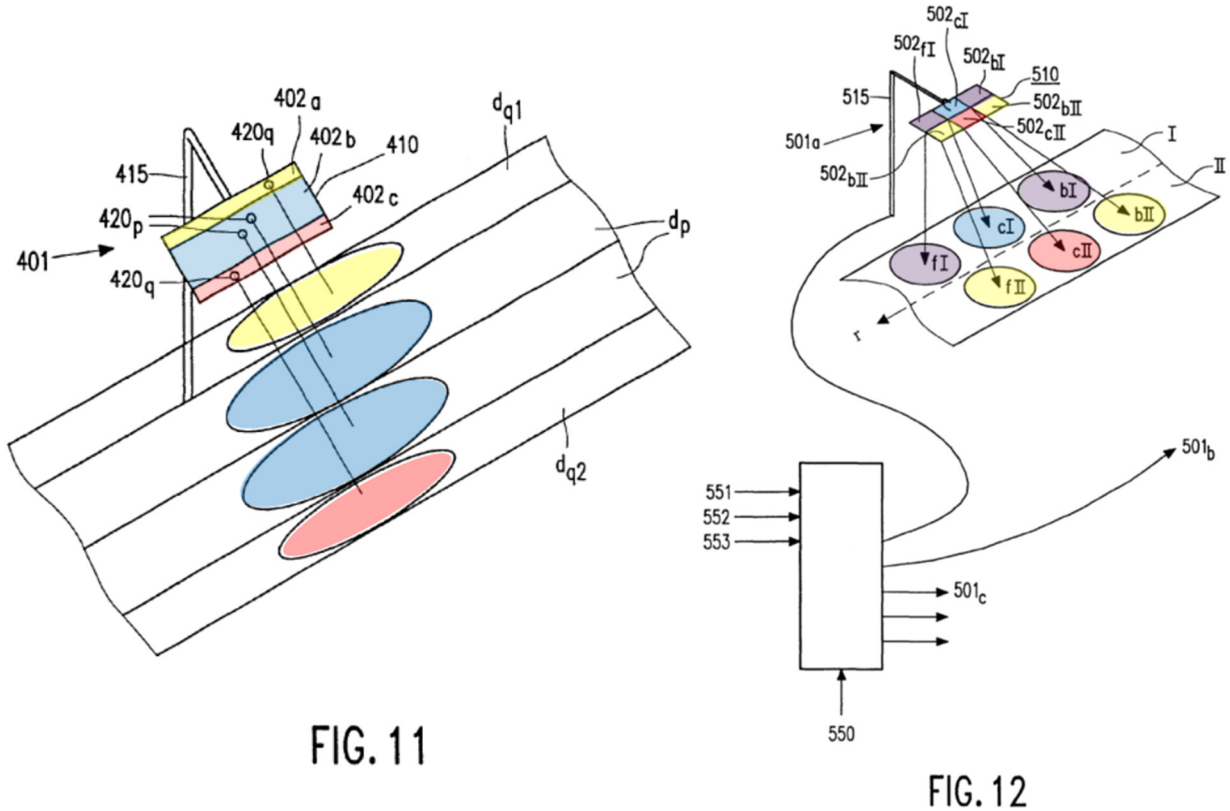

FIG. 11

FIG. 12

EX1006, FIGs. 11 and 12 (annotated).

Begemann discloses [1.B]. EX1003, ¶¶244-248.

4. [1.C]

Begemann's lighting units can have "mutually differing **spectra**," which may "be **adapted** to the optical properties, for example the reflectivity, of the individual portions of the object." EX1006, 2:54-62, 3:5-26, 8:9-35. Light distribution may also be adjusted "through a control of the **luminous fluxes** of lighting modules or of separate lighting units of a lighting module." *Id.*, 1:62-65. Luminous flux (light intensity) of an LED chip "is controllable over a wide range." *Id.*, 4:57-60.

Begemann discloses [1.C]. EX1003, ¶¶249-252.

5. [1.D]

Begemann's control system ("*controller*") receives "signals from sensors and other sources, so that the lighting situation, for example the light distribution, **illuminance**, or **colour** temperature, can be automatically adapted to the circumstances." EX1006, 4:47-5:3, 1:62-65.

For example, Begemann's controller controls intensity of each lighting module of luminaire 501_a "independently of one another" according to weather conditions, for example, as follows:

Weather conditions	Lighting system setting
—	on: 502_{fI}, 502_{fII}, 502_{cI}, 502_{cII}, 502_{bI}, 502_{bII}
rain	on: 502_{fII}, 502_{cI}, 502_{cII}, 502_{bI}, 502_{bII} off: 502_{fI}
snow	dimmed: 502_{fI}, 502_{fII}, 502_{cI}, 502_{cII}, 502_{bI}, 502_{bII}
fog	on: 502_{cI}, 502_{cII}; dimmed: 502_{fI}, 502_{fII}, 502_{bI}, 502_{bII}

Id., 8:57-9:10, FIG. 12. Begemann's controller also adjusts the lighting modules according to traffic density such that "only one out of every six lighting modules in each luminaire is operating." *Id.*, 9:11-9:29, FIG. 12. Begemann's controller switches on the lighting modules "temporarily when they are about to be passed by a vehicle." *Id*.

Although Begemann illustrates a common control system shared between multiple luminaires in the example of street lighting, a POSA would have understood that Begemann's controller can also be included in each luminaire because controllers (e.g., microcontrollers) had been embedded in electronic devices

including electric lights long before the effective filing date of the '551 patent. EX1018, Vaglica, 106; EX1019, Khan, 36; EX1003, ¶256; EX1006, 4:61-63, FIG. 12.

Begemann discloses [1.D]. EX1003, ¶¶253-257.

6. [1.E]

Begemann's controller "receive[s] signals from **sensors** and other sources." EX1006, 4:53-57, 8:58-9:29. Begemann's controller "receive[s] signals inter alia from a fog **detector** and from means which measure the reflection properties of the road **surface**." *Id.*, 4:63-5:3, 8:56-65. Begemann's "proximity **detector** [] detects the presence of **persons** in the room to be illuminated." *Id.*, 4:63-5:3. Therefore, Begemann's detectors "*sens[e] at least one of objects, surfaces and beings within the area to be lit*" and "*pass[] the sensed information to the controller*."

Begemann's sensors sense "the optical properties, for example the reflectivity, of the individual portions of the object" ("*the specific sub-area location information*") such that "[t]he spectra of the lighting units may then be adapted to" accordingly. EX1006, 2:54-62; EX1003, ¶260. "If water is present on the road surface [in road section f_l], lighting module 502_{fl} is dimmed or switched off entirely, so that disturbing reflections on the water surface are avoided." EX1006, 9:11-13, 8:38-58, FIG. 12. Here, Begemann's sensors provide the road surface condition (water) in the specific road section (f_l) for adjusting the specific lighting module

(502_{fI}). EX1003, ¶260. Begemann also adjusts the lighting module settings according to traffic density and approaching vehicles, where information about the driving direction, driving lane, and specific road section is sensed and passed to Begemann's controller. EX1003, ¶260; EX1006, 9:11-29.

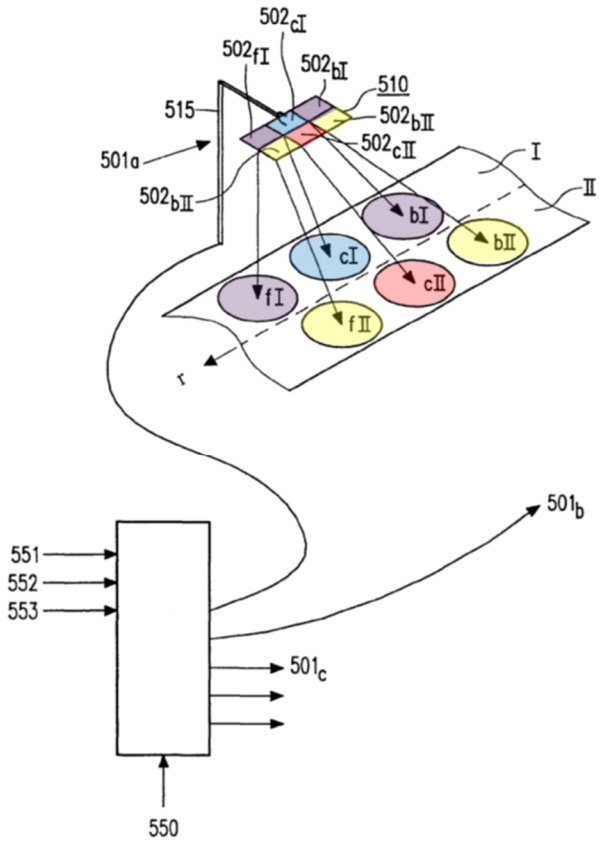

FIG. 12

EX1006, FIG. 12 (annotated).

Lee's digital camera of "CCD array" "captures images of room R1 and transmits the image data to control unit 20. The images are typically comprised of **pixel data**," which are processed by the image recognition software in the control unit to identify and track a person. EX1026, 5:65-6:37. In the combined system of

Begemann and Lee, Lee's camera provides pixel data ("*the specific sub-area location information*") to Begemann's controller to identify and track person, rain, snow, traffic density, approaching vehicles, etc, in the specific location. EX1003, ¶261.

Begemann, alone or in view of Lee, renders [1.E] obvious. EX1003, ¶¶258-262.

7. [1.F]

Begemann's intelligent controller includes "*a processor*" because Begemann's controller processes the signals from sensors and determines "the lighting situation, for example the light distribution, illuminance, or colour temperature, [to] be automatically adapted to the circumstances." EX1006, 4:53-57. For example, Begemann's controller "*process[es] the sensed information and determin[es] illumination requirements*" according to: i) weather conditions, e.g., fog, rain or snow, to avoid glare or disturbing reflections; ii) traffic density and approaching vehicle to save energy; and iii) presence of persons in a room. *Id.*, 4:63-5:3, 8:61-9:29. As discussed above, controllers (e.g., microcontrollers) that includes a processor had been widely used for control and processing information. §§IV.A, VI.A.7; EX1003, ¶264.

Lee's control unit includes "digital controller, processor, microprocessor, computer, server or the like, and any needed ancillary components (such as a

memory, database, etc.) which can carry out the control processing and signal generation." EX1026, 4:51-55. Lee's processor/control unit "run[s] software for determining and outputting appropriate control signals" for controlling the intensity of respective lights. *Id.*, 4:48-5:6, FIGs. 2, 2a. Therefore, in view of Lee, a POSA would have understood that Begemann's controller includes a processor, or it would have been obvious for a POSA to incorporate Lee's processor into Begemann's controller. EX1003, ¶265; §IX.A.

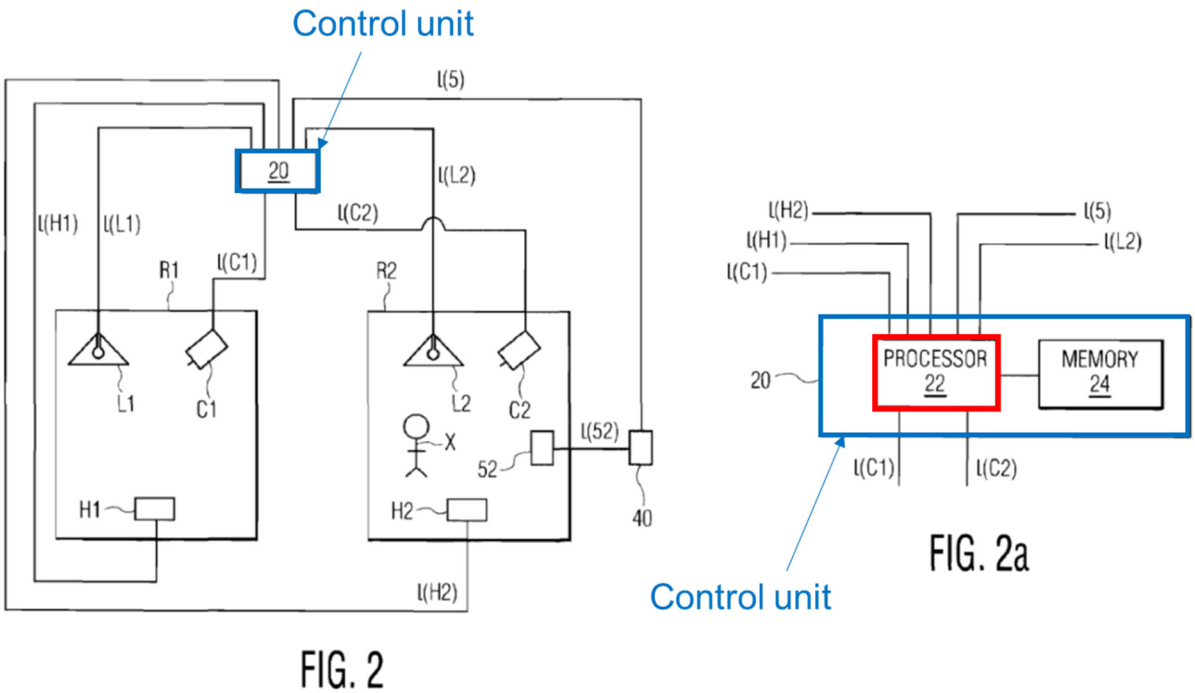

EX1026, FIGs. 2, 2a (annotated).

Begemann, alone or in view of Lee, renders [1.F] obvious. EX1003, ¶¶263-266.

8. [1.G]

Begemann's processor/controller determines illumination requirement for

lighting modules using the following "*look-up table*":

Weather conditions	Lighting system setting
—	on: 502_{fI}, 502_{fII}, 502_{cI}, 502_{cII}, 502_{bI}, 502_{bII}
rain	on: 502_{fII}, 502_{cI}, 502_{cII}, 502_{bI}, 502_{bII} off: 502_{fI}
snow	dimmed: 502_{fI}, 502_{fII}, 502_{cI}, 502_{cII}, 502_{bI}, 502_{bII}
fog	on: 502_{cI}, 502_{cII}; dimmed: 502_{fI}, 502_{fII}, 502_{bI}, 502_{bII}

EX1006, 8:58-9:20. Also, as repeatedly admitted by Patent Owner, it would have been obvious for a POSA to use "*artificial intelligence, pattern recognition, video analytics*" to determine road conditions (e.g., rain, snow, fog), traffic density, approaching vehicle, etc. §§IV.A-IV.B, VII.B; EX1003, ¶269; EX1006, 8:60-9:29.

Furthermore, Lee's control unit receives and processes images to identify persons "using image recognition." EX1026, Abstract, 2:39-46, 5:56-60, 6:15-36, 7:28-37, 7:53-8:24; *see also* EX1038. In the combined system of Begemann and Lee, Lee's image recognition software is incorporated into Begemann's controller. §IX.A. By using Lee's image recognition processing ("*pattern recognition*" or "*video analytics*"), specific objects (e.g., water, snow, fog, traffic density, approaching vehicles, persons) are recognized, and coordinates of the specific objects are provided to Begemann's controller to determine the illumination requirements for the respective lighting module and/or lighting unit. EX1003, ¶270.

Begemann, alone or in view of Lee, renders [1.G] obvious. EX1003, ¶¶267-272.

9. [1.H]

Begemann adapts spectra of the lighting units to the optical properties "of the **individual portions of the object**, so that an optimum visibility of these portions is realized." EX1006, 2:54-62. Begemann's lighting modules are controlled according to the specific illumination requirement of respective road sections:

Weather conditions	Lighting system setting
—	on: 502_{fI}, 502_{fII}, 502_{cI}, 502_{cII}, 502_{bI}, 502_{bII}
rain	on: 502_{fII}, 502_{cI}, 502_{cII}, 502_{bI}, 502_{bII} off: 502_{fI}
snow	dimmed: 502_{fI}, 502_{fII}, 502_{cI}, 502_{cII}, 502_{bI}, 502_{bII}
fog	on: 502_{cI}, 502_{cII}; dimmed: 502_{fI}, 502_{fII}, 502_{bI}, 502_{bII}

Id., 8:38-9:20, FIG. 12. "If water is present on the road surface [in road section f_I], **lighting module 502_{fI}** [for illuminating road section f_I] is dimmed or switched off entirely, so that disturbing reflections on the water surface are avoided." *Id*. In case of fog, Begemann's controller adjusts the setting of lighting modules 502_{cI}, 502_{cII}. *Id.*, 9:18-20. Therefore, Begemann's controller/processor adjusts the lighting modules/units for the specific road section ("*for that sub-area*") to meet the specific illumination requirement. EX1003, ¶274.

Begemann discloses [1.H]. EX1003, ¶¶273-275.

Begemann, alone or in view of Lee, renders claim 1 obvious. EX1003, ¶¶234-276.

C. Claim 2

Begemann's lighting system includes "a sensor for detecting fog and possibly

for ascertaining the degree of light scattering caused thereby," "a sensor for measuring the degree of wetness of the road surface," "a daylight sensor which measures the luminous flux of incident daylight," "a proximity detector which detects the presence of persons in the room to be illuminated," and a sensor for detecting snow, traffic density, approaching vehicle, etc. EX1006, 4:63-5:3, 8:60-9:29. Therefore, Begemann's detectors include at least a "*photo sensor*".

Lee's camera "captures images within the room," particularly "images of persons." EX1026, 3:53-56, FIGs. 1-2. Lee's digital camera has "a CCD array." *Id.*, 5:65-6:1.

Begemann, alone or in view of Lee, renders claim 2 obvious. EX1003, ¶¶277-280.

D. Claim 3

Begemann's lighting system "for interior lighting receives signals…from a **daylight sensor** which measures the luminous flux of incident daylight." EX1006, 4:66-5:3. Begemann's controller "receive[s] signals from sensors," and adapts "light distribution, illuminance, or colour temperature" to the circumstances by, e.g., "*taking into consideration the intensity variations over the area now illuminated by the daylight*." *Id.*, 4:53-57.

Lee also discloses using a "daylight sensor" to "prevent the light from turning on when there is ambient daylight." EX1026, 1:21-24.

Begemann, alone or in view of Lee, renders claim 3 obvious. EX1003, ¶¶281-284.

E. Claim 4

1. [4.A]

Begemann's proximity detector "detects the presence of **persons** in the room to be illuminated." EX1006, 4:66-5:3.

Lee's camera "captures…images of persons in the room" for the control unit to "**identify**…known persons located in one or more of the regions." EX1026, Abstract, 2:37-3:12, 3:53-56, 4:2-11, 5:56-8:39, 8:61-9:12. "Each family member's set of preferences **stored** in memory 24 is correlated to the identity of the family member," which is used "to access the preferences for the identified family member from memory 24." *Id.*, 8:52-56.

2. [4.B]

Begemann's controller receives "*commands*" (central signal 553, sensor signals 551/552) from "*input device[s]*" (remote control, sensors) to activate the lighting system or adjust the light intensity of the illumination provided to the individuals (e.g., drivers) based on illumination requirements. EX1006, 4:53-57, 8:61-9:29, FIG. 12; EX1003, ¶292. Begemann's controller of interior lighting adjusts the illumination conditions according to "*commands*" received "from a proximity detector" when "the presence of persons in the room to be illuminated" is detected. *Id.*; EX1006, 4:66-5:3.

When a known person is identified, Lee's processor "executes control software so that the servicing components [e.g., lighting] of the room in which the person is located are automatically adjusted by the control unit 20 **according to the individual preference** of the identified person." EX1026, Abstract, 2:37-3:12, 4:2-11, 5:56-64, 6:18-7:27, 7:28-9:29.

Begemann and Lee render claim 4 obvious. EX1003, ¶¶285-295.

X. GROUND 5: THE COMBINATION OF BEGEMANN, LEE, AND PEDERSON RENDERS CLAIMS 8 AND 10-18 OBVIOUS

A. The motivation to combine Begemann, Lee, and Pederson

In Begemann, "a predetermined beam direction" can be adjusted for the lighting unit such that light distribution of the luminaire may be adapted during manufacture based on usage. EX1006, 4:7-13. However after "luminaire is being assembled," the mounting member 22 of Begemann's lighting units is fixed in the recess 12 by the adhesive agent 14. *Id.*, 6:1-9, FIG. 3. Begemann does not describe how to automatically adapt the direction of the lighting unit 20 according to the changing environment and application. Thus, a POSA would have been motivated to look to prior art, such as Pederson, for the details. EX1003, ¶296.

Pederson uses gyrators to "impart motion to" light having LED light sources 30. EX1011, ¶¶144-146, FIG. 3. Pederson's gyrator "comprises electric motors 96" connected to "an external controller 55 or controller 50." *Id.*, ¶¶183-185, FIGs. 3, 15. Pederson's gyrator is attached to the light through the connection portion 40

such that light rotates or oscillates about a vertical axis by motor 96.1 and oscillates about a horizontal axis by motor 96.2. *Id*.

Based on the teachings of Pederson, a POSA would have been motivated to modify Begemann by i) replacing the mounting member 22 and recess 12 of Begemann's lighting unit with Pederson's connecting portion 40 and the attached gyrator. EX1003, ¶297-298; EX1006, FIG. 3; EX1011, FIGs. 3, 15. As such, the combined lighting system of Begemann and Pederson can selectively vary the directions of the lighting units. Additionally, a POSA would have been motivated to ii) connect Pederson's gyrator to Begemann's controller such that the directions of the lighting units can be adjusted automatically. EX1003, ¶298. These modifications are compatible with the combinations with Lee, where Lee's camera and image recognition software are incorporated in Begemann's system. §IX.A

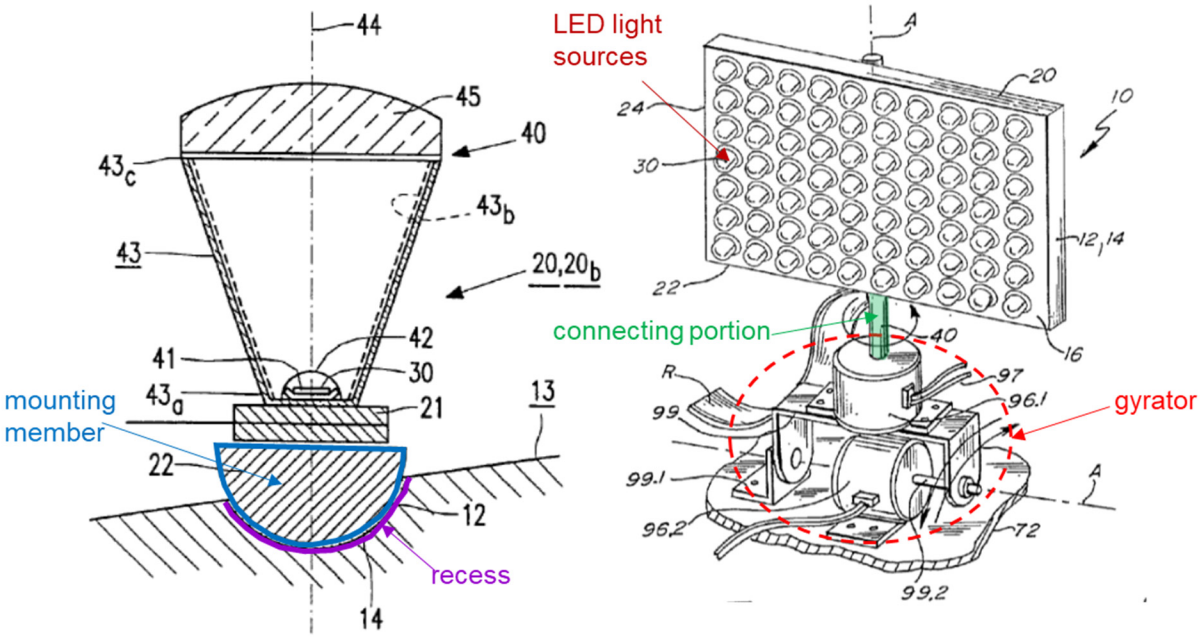

EX1006, FIG. 3 (annotated); EX1011, FIG. 3 (annotated).

A POSA would have been further motivated to combine Begemann, Lee, and Pederson because all of them are in the same general field of lighting systems, and address the same problem—improve efficiency (e.g., by subdividing illumination area, adding communication capability or providing spatial and electrical efficiency). EX1006; 1:24-27, 1:30-32; EX1026, 1:65-2:23; EX1011, ¶17. Furthermore, a POSA would have combined the system of Begemann and Lee with the teachings of Pederson by known methods (e.g., mounting LED chips, installing connecting portions and motors) and the results of the combination would have been predictable to a POSA (e.g., adjustable directions of Begemann's lighting units). EX1003, ¶299. Finally, the proposed combination of Begemann, Lee, and Pederson would involve nothing more than incorporating a well-known concept (gyrators)

into a well-known system (Begemann's lighting system). *Id.*; *KSR Int'l Co. v. Teleflex Inc.*, 550 U.S. 398, 419-421 (2007).

B. Claim 8

1. [8.P]

Begemann's luminaire can be used "for street lighting, spotlighting, or floodlighting," "for lighting a portion of a street … for lighting objects in shop windows," and "for interior lighting" in the mesopic range. EX1006, 1:9-12, 1:57-62, 4:66-5:3, 2:63-66. Therefore, Begemann's luminaire provides light to an illuminated area "*in which visual activities are performed*."

In Begemann, portions of the object ("*different sub-areas*") need to be illuminated "with mutually **differing spectra**," "so that an optimum visibility of these portions is realized" *Id.*, 2:54-62. For road lighting, "the first portion… [can be] a driving lane, and the second portion [can be] a lane lying alongside the former lane," such that "[a] higher visibility of the surroundings, and a resulting shorter reaction time of drivers present in the driving lane are obtained thereby." *Id.*, 3:5-40, 8:5-9:29.

Begemann discloses [8.P]. EX1003, ¶¶301-304; *see also* §IX.B.

2. [8.A]

Begemann discloses [8.A]. §IX.B; EX1003, ¶305.

3. [8.B]

Pederson's light includes LED light sources and a connecting portion for

attaching the light to a gyrator that "impart motion to" the light. EX1011, ¶¶144-145, FIGs. 3, 15. Pederson's gyrator "comprises electric motors 96," which is connected to a controller. *Id.*, ¶183, FIG. 3. The gyrator rotates or oscillates the light about a vertical and horizontal axis by motor 96.1 and motor 96.2, respectively. *Id.*, ¶¶183-184, FIG. 3.

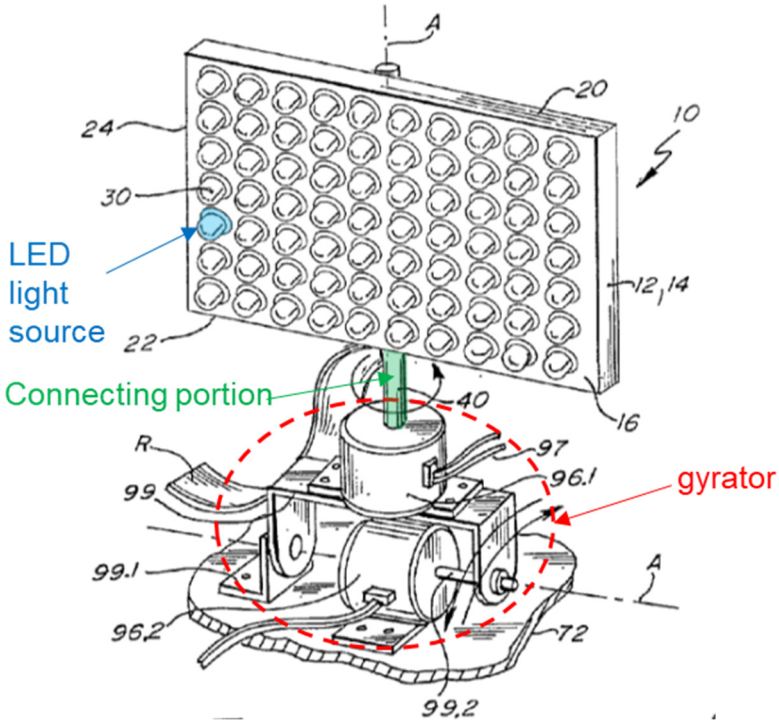

EX1011, FIG. 3 (annotated).

Begemann's lighting unit ("*light source*") "comprise[s] at least an LED chip." EX1006, Abstract, 5:51-57, FIG. 3. In the combined system of Begemann, Lee and Pederson ("Begemann-Lee-Pederson"), Begemann's lighting unit is mounted on a "*movable structure*" similar to Pederson's gyrator "*for aiming the directional light sources mounted thereon in a defined direction*." §X.A.

Begemann-Lee-Pederson renders [8.B] obvious. EX1003, ¶¶306-309.

4. [8.C]

Begemann-Lee-Pederson renders [8.C] obvious. §§IX.A-IX.C; EX1003, ¶310.

5. [8.D]

Pederson's light includes a controller. EX1011, ¶¶145, 149, FIG. 3. Pederson's controller is connected to the gyrator through cables 97, which controls the light sources direction. EX1011, ¶¶183-184, FIG. 3.

In Begemann-Lee-Pederson, Begemann's lighting unit is mounted on a movable structure similar to Pederson's gyrator, which is controllable through Begemann's controller, to adjust the direction of the lighting unit. EX1003, ¶314; §§X.A, X.B.3.

Begemann-Lee-Pederson renders [8.D] obvious. *See also* §IX.B; EX1003, ¶¶311-315.

6. [8.E]

Begemann's "**proximity** detector [] detects the presence of **persons** in the room to be illuminated," where Begemann's controller/processor "receives signals" from the proximity detector for identifying the "*location of people*." EX1006, 4:63-5:3. Begemann's controller/processor also identifies "reflection properties of the road surface," "traffic density," water, snow, fog, and approaching vehicle. *Id.*, 4:63-5:3, 8:60-9:29.

Furthermore, Lee's camera detects "the **location of a particular person**" such that light settings are adjusted "based on the preferences of the particular person." EX1026, 2:37-46, 3:53-58, Abstract, FIGs, 1, 2. Lee's processor runs the "image recognition software that is **stored in memory**" and "processes the incoming images" from the camera. EX1026, 5:56-60, FIG. 2a. Lee uses image recognition software "to locate the person's face in the received image and to **identify the person**." *Id.*, 6:15-24. Lee's control unit detects and tracks a person, particularly, "the approximate **location** of the person's head." *Id.*, 6:25-36.

Begemann-Lee-Pederson renders [8.E] obvious. EX1003, ¶¶316-321; §§X.A, IX.B.

7. [8.F]

Begemann-Lee-Pederson renders claim [8.F] obvious. EX1003, ¶322; §§VIII.B.7, IX.B.

Begemann-Lee-Pederson renders claim 8 obvious. EX1003, ¶¶300-323.

C. Claim 10

Begemann's controller sets the lighting modules "depend[ing] on the traffic density," and switches on the lighting modules "temporarily when they are about to be passed by a vehicle." EX1006, 9:21-29. Begemann's controller receive signals to "adapt the lighting conditions to the weather conditions." *Id.*, 4:63-66, 8:61-9:20. Begemann's "interior lighting receives signals, for example, from a daylight sensor which measures the luminous flux of incident daylight and from a proximity

detector which detects the presence of persons in the room to be illuminated." *Id.*, 4:66-5:3. Daylight, presence of person, weather, and road conditions (rain, snow, fog, traffic density, approaching vehicle, etc.) are "*real time information*." EX1003, ¶325.

Lee's camera also provides images of the "*real time information*." EX1003, ¶326; EX1026, 3:53-56; §§IX.A-IX.C.

Begemann-Lee-Pederson renders claim 10 obvious. §§IX.B, X.B; EX1003, ¶¶324-327.

D. Claim 11

Begemann-Lee-Pederson renders claim 11 obvious. §X.B; EX1003, ¶328.

E. Claim 12

Begemann's luminaire provides different illumination for a road section ("*sub-area*") according to weather and road conditions. EX1006, 8:38-9:29, FIG. 12; §§IX.B, X.B.

Begemann's luminaire provides illumination "*proximate to the individuals*" (persons/drivers) when "a **proximity** detector [] detects the presence of persons" or "about to be passed by a vehicle." EX1003, ¶331; EX1006, 4:66-5:3, 9:26-29, 1:52-56, 6:54-58. Lee's control unit receives images from the camera, and "detect[s] and **track[s] a person**," e.g., "track[s] the approximate location of the person's head." EX1026, 6:25-29. Lee's control unit then automatically adjusts lighting "according to the individual **preference** of the identified person." *Id.*, 8:40-60. In Begemann-

Lee-Pederson, Begemann's controller controls Pederson's gyrator to change the direction of Begemann's lighting units "*such that they provide the required illumination in a sub-area proximate to the individuals as they move around in the illuminated area*." EX1003, ¶¶332-334; §§X.A-X.B.

Begemann-Lee-Pederson renders claim 12 obvious. EX1003, ¶¶329-335.

F. Claim 13

Begemann's luminaire is applicable to "lighting of roads," "street lighting," and the illuminated area includes "road surface," "road section." EX1006, 2:30-34, 3:13-16, 4:63-66, 5:41-49, 6:45-51. The objects of street lighting include "*road signs*."

Begemann-Lee-Pederson renders claim 13 obvious. EX1003, ¶¶336-338.

G. Claim 14

Begemann's luminaire is used "for street lighting, **spotlighting**, or **floodlighting**." EX1006, 1:9-11, 1:57-65, 7:29-30. Begemann's "lighting units comprises two or more types of lighting units for generating beams which **widen more and less strongly**." *Id.*, 3:28-31. Begemann uses reliefs to split, deflect, or widen light beams. *Id.*, 7:13-30, FIGs. 6-7. Therefore, some of Begemann's lighting units provide spotlighting with limited beam angle while other lighting units provide general illumination with wider beam angle. EX1003, ¶340.

Pederson's gyrator includes a swivel arm 99 controlled by motors 96. EX1011, ¶184, FIG. 3; §§X.A-X.B. Also, "*automatic swivel joint*" had been widely

used, e.g., in headlamps. EX1032, 3-4, 23-25; EX1003, ¶342.

Begemann-Lee-Pederson renders claim 14 obvious. EX1003, ¶¶339-343.

H. Claim 15

While Begemann's luminaire includes a controller, "luminaires for street lighting may be connected to a common control system." EX1006, 4:61-63, 8:40-42, FIG. 12. Control system 550 controls "a group of identical luminaires 501_a, 501_b…along a street to be illuminated." *Id.*, 8:42-45, FIG. 12. Begemann's control system provides communications between luminaires 501_a/501_b/501_c such that "the lighting system is used as a guiding lighting…to save energy at a low traffic density." *Id.*, 9:21-29. When a particular luminaire is "about to be passed by a vehicle," Begemann's control system "switched on temporarily" the lighting modules of the particular luminaire. *Id*.

In Begemann-Lee-Pederson, each of Begemann's luminaires 501_a/501_b/501_c includes a camera for obtaining images of the road sections around respective post 515, and Begemann's control system processes the images, using Lee's image recognition, to determine the weather and road conditions (e.g., rain, snow, fog, traffic density and approaching vehicles) around each post 515. EX1003, ¶346. It would have been obvious that Begemann's control system communicates the information obtained from the camera of one luminaire (e.g., 501_a) to another luminaire (e.g., 501_b) ("*a second device*") such that information (e.g., about

approaching vehicle) can be passed from one luminaire to the others. *Id.*

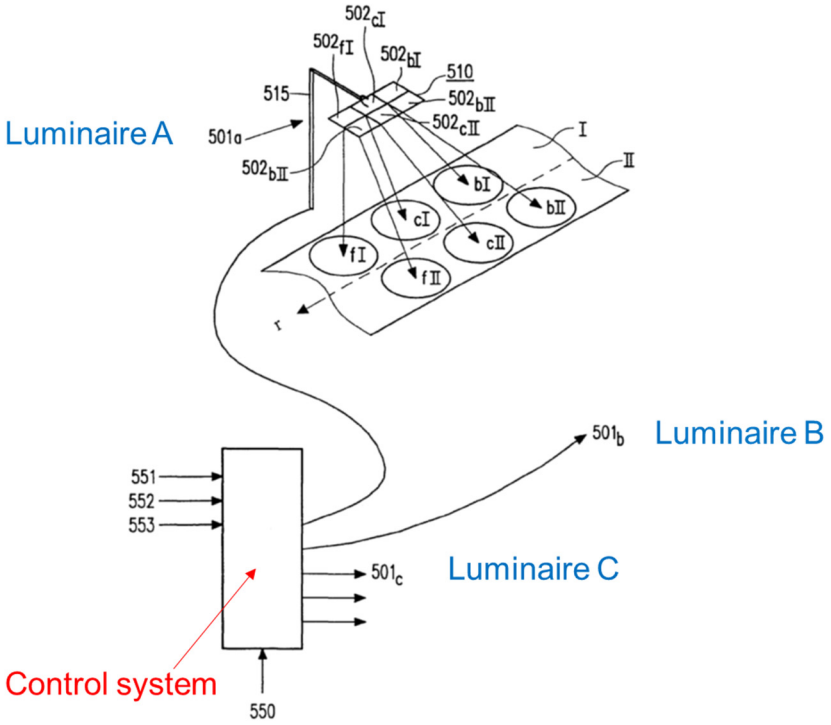

FIG. 12

EX1006, FIG. 12 (annotated).

Begemann-Lee-Pederson renders claim 15 obvious. EX1003, ¶¶344-347.

I. Claim 16

Begemann-Lee-Pederson renders claim 16 obvious. §X.H; EX1003, ¶348.

J. Claim 17

In Begemann-Lee-Pederson, the information exchanged between Begemann's luminaires $501_a/501_b/501_c$ is used for "*identifying traffic requirements*" (e.g., traffic density and approaching vehicles), and "*from the vehicles locations and geometry*" the illumination requirements of the illumination area is determined (e.g., temporarily switching on a luminaire according to the location of an approaching

vehicle and the geometry of the road sections and distances between posts). EX1003, ¶350; §X.H; EX1006, 9:21-29.

Begemann-Lee-Pederson renders claim 17 obvious. EX1003, ¶¶349-351.

K. Claim 18

Begemann's luminaires are "switched on temporarily when they are about to be passed by a vehicle." EX1006, 9:26-29. Begemann's controller/control system "*increase[s] illumination with an approach of a vehicle*."

Begemann-Lee-Pederson renders claim 18 obvious. EX1003, ¶¶352-354.

XI. SECONDARY CONSIDERATIONS DO NOT SUPPORT NONOBVIOUSNESS

Petitioner is not aware of any evidence of alleged secondary considerations of non-obviousness having nexus to the challenged claims. EX1003, ¶¶355-359. Patent Owner submitted alleged secondary considerations evidence in the '815 reexamination. EX1012, 66-83. The alleged praise and long felt need are directed to the original claim 6 and new claims 24-87 of the reexamination. *Id*. The Central Reexamination Unit did not address this evidence. *Id*., 930-943. Regardless, the challenged claims in this proceeding are different claims, for which that evidence is inapplicable. Petitioner reserves the right to address any evidence Patent Owner presents.

XII. DISCRETIONARY CONSIDERATIONS UNDER SECTIONS 314(A), 325(D), AND 315(D) STRONGLY FAVOR INSTITUTION

A. The *Fintiv* factors strongly favor institution

The *Fintiv* factors strongly favor institution. *Apple Inc. v. Fintiv, Inc.*, IPR2020-00019, Paper 11 (P.T.A.B. Mar. 20, 2020) (precedential); *see also* June 21, 2022 Memorandum: Interim Procedure for Discretionary Denials in AIA Post Grant Proceedings with Parallel District Court Litigation ("June 2022 Memo").

Factor 1 is neutral or favors institution. No motion for stay has been filed and the court has not indicated whether it would grant any such motion. Because the Board typically "will not attempt to predict how the district court in the related district court litigation will proceed," *Sand Revolution II, LLC v. Continental Intermodal Group – Trucking LLC*, IPR2019-01393, Paper 24, 7 (P.T.A.B. June 16, 2020) (informative), factor 1 carries little weight here.

Factor 2 favors institution. The co-pending litigation in the DDE is in its early stages, where trial date is scheduled on November 18, 2024. EX1051, Scheduling Order, 15; *see* June 2022 Memo, 3. Thus, trial would likely occur (if at all) in late 2024 —over five months after the projected final decision here. *See Mylan Pharm. Inc. v. Bayer Pharma Aktiengesellschaft*, IPR2022-00517, Paper 15 at 8-9 (P.T.A.B. Aug. 9, 2022) (evaluating median time to trial for factor 2).

Factor 3 strongly favors institution. By institution, neither the parties nor the DDE court will have invested significant resources in the litigation. The court has

not issued any substantive rulings (e.g., claim construction, dispositive motion). Petitioner's diligence filing this Petition less than 7 months after the complaint, and before Patent Owner's infringement contentions, confirms that factor 3 strongly favors institution.

Factors 4 and 5 strongly favor institution. Petitioner stipulates that, if the Board institutes this Petition, Petitioner will not raise at trial in parallel litigation any Ground raised here. Petitioner's stipulation mitigates concerns for duplicating efforts and inconsistent conclusions.

Factor 6 strongly favors institution. The Petition's merits are strong. *See* June 2022 Memo, 3-5. Additionally, under factor 6: (1) the Board is best suited to address the technical issues raised here; (2) a decision on the merits at institution may aid the parties in resolving their dispute; and (3) determining patentability will benefit the public, providing a complete record and rationale absent from a jury verdict form. Patent Owner has already sued at least 8 defendants and could potentially sue others in view of the accused technology.

Holistically, the *Fintiv* factors strongly favor institution.

B. *General Plastic* and *Valve Corp.* strongly favor institution

Serial petitioning concerns addressed in *General Plastic Indus. Co., Ltd. v. Canon Kabushiki Kaisha*, IPR2016-01357, Paper 19 (P.T.A.B. Sept. 6, 2017) (§ II.B.4.i precedential), and *Valve Corp. v. Electronics Scripting Products, Inc.*,

IPR2019-00062, Paper 11 (P.T.A.B. Apr. 2, 2019) (precedential), are not at play here. Petitioner's previous IPRs are directed to different claims of the '551 patent. §XIII. The fundamental fairness concerns undergirding *General Plastic* and *Valve Corp.* confirm institution is warranted here.

C. *Advanced Bionics* strongly favors institution

The two-part framework from *Advanced Bionics, LLC v. MED-EL Elektromedizinische Geräte GmbH*, IPR2019-01469, Paper 6, 8-9 (P.T.A.B. Feb. 13, 2020) (precedential), demonstrates that denial under § 325(d) is not appropriate. Under Part 1, the same or substantially the same art or arguments were not previously presented to the Office, ending the inquiry in favor of institution. No references forming a Ground were applied or cited during the '551 patent's prosecution or reexamination. The "new, noncumulative prior art" asserted here strongly favors institution. *Oticon Medical AB v. Cochlear Ltd.*, IPR2019-00975, Paper 15, 20 (P.T.A.B. Oct. 16, 2019) (§§ II.B, II.C precedential).

D. Early examination stage of the reissue application strongly favors institution

Reissue Application No. 16/858,342 ("the '342 reissue application") was filed on April 24, 2020, where 21 new claims were added with no amendment to the original 23 claims of the '551 patent. EX1048, '342 Reissue History. Prosecution of the reissue application was suspended on May 16, 2022 due to the '815 Reexamination. Accordingly to the public transaction history, the Office re-

docketed the ’342 reissue application for examination on December 8, 2022. The ’342 reissue application has not been examined and no office action has been issued. *Id*.

IPR filing is subject to one-year statutory bar under 35 U.S.C. §315(b). Considering the early stage and time needed for examination of the ’342 reissue application, institution of the instant IPR proceeding is warranted because final determination may be issued within one-year after institution. *Hewlett-Packard Co. v. MCM Portfolio LLC*, Case IPR2013-00217, Paper 8, 2-3 (PTAB May 10, 2013) (order to stay concurrent examination of reissue application); *CBS Interactive Inc.* v. *Helferich Patent Licensing, LLC.,* Case IPR2013-00033, Paper 15 (PTAB Nov. 6, 2012) (order to stay the concurrent reexamination); *Stride Rite Children's Group, LLC* v. *Shoes By Firebug LLC,* Case IPR2017-01810, Paper 23 (PTAB Jul. 12, 2018) (order to stay of reissue application).

Petitioner stipulates that if the Board institutes this Petition, Petitioner will immediately seek leave to file a motion to stay the examination of the ’342 reissue application. Petitioner’s stipulation mitigates concerns for duplicating efforts in parallel Office proceedings.

XIII. MANDATORY NOTICES (37 C.F.R. § 42.8(A)(1))

REAL PARTY IN INTEREST: The real party-in-interest is Petitioner Volkswagen Group of America, Inc., which is a subsidiary of Volkswagen AG.

RELATED MATTERS: The ’551 patent is the subject of the following pending civil actions: *Torchlight Techs. LLC v. Daimler AG et al.*, Case No. 1:22-cv-00751 (D. Del.), and *Torchlight Techs. LLC v. General Motors LLC et al.*, Case No. 1:22-cv-00752 (D. Del.), both filed June 7, 2022. Petitioner, VWGoA, was voluntarily dismissed without prejudice from the civil action 1:22-cv-00751 on September 23, 2022.

The ’551 patent claims the benefit of U.S. Patent No. 8,100,552. U.S. Patent Nos. 11,208,029 (“the ’029 patent”) and 10,894,503 (“the ’503 patent”) claim the benefit of the ’551 patent. Petitioner filed the IPR petition (IPR2022-01586) for the ’029 patent on October 3, 2022, and IPR petitions (IPR2023-00197 and IPR2023-00328) for the ’503 patent on November 30, 2022 and December 16, 2022. Unified Patents, LLC filed the IPR petition (IPR2022-01500) for the ’029 patent on September 22, 2022.

The ’551 patent was the subject of *Ex Parte* Reexamination No. 90/014,815 (“the ’815 reexamination”) and a certificate was issued on August 19, 2022. EX1008. Petitioner filed the IPR petition (IPR2023-00315) on December 9, 2022, and is concurrently filing IPR Petition (IPR2023-00318), challenging new claims 24-55 and 56-87 of the ’551 patent, respectively. The ’551 patent is also the subject of reissue application No. 16/858,342.

LEAD AND BACKUP COUNSEL: Under 37 C.F.R. §§ 42.8(b)(3) and 42.10(a),

Petitioner appoints **Michael D. Specht** (Reg. No. 54,463) as lead counsel, **Jason A. Fitzsimmons** (Reg. No. 65,367) as first back-up counsel, and **Danny E. Yonan** (Reg. No. 53,812), **Min Yang** (Reg. No. 78,149), and **Ian Soule** (Reg. No. 74,290) as additional back-up counsel, all at the address: STERNE, KESSLER, GOLDSTEIN & FOX P.L.L.C., 1100 New York Avenue, N.W., Washington, D.C., 20005, phone (202) 371-2600, and facsimile (202) 371-2540.

SERVICE INFORMATION: Petitioner consents to electronic service by email at: **mspecht-PTAB@sternekessler.com**, **jfitzsimmons-PTAB@sternekessler.com**, **dyonan-PTAB@sternekessler.com**, **myang-PTAB@sternekessler.com**, **isoule-PTAB@sterenekessler.com**, and **PTAB@sternekessler.com**.

XIV. CONCLUSION

For the reasons above, *inter partes* review of claims 1-4, 7-8 and 10-18 of U.S. Patent No. 9,955,551 is requested.

Respectfully submitted,

STERNE, KESSLER, GOLDSTEIN & FOX P.L.L.C.

/Michael D. Specht/

Michael D. Specht (Reg. No. 54,463)
Attorney for Petitioner
Volkswagen Group of America, Inc.

Date: December 22, 2022

1100 New York Avenue, N.W.
Washington, D.C. 20005-3934
(202) 371-2600

XV. APPENDIX A: THE CHALLENGED CLAIMS

1. **[1.P]** A light fixture for illuminating an area to be lit capable of automatically meeting specific illumination requirements of different sub-areas within the area to be lit, comprising:

[1.A] a. a multiplicity of independently controllable light sources, including at least two light sources of directional light output, **[1.B]** such that each said source substantially illuminates a different sub-area within the area to be lit, **[1.C]** the light sources having at least one of controllable light intensity and spectral light distribution;

[1.D] b. a controller for adjusting at least one of a light intensity and light spectrum of the light sources;

[1.E] c. one or more detectors for sensing at least one of objects, surfaces and beings within the area to be lit including the specific sub-area location information and of passing the sensed information to the controller and;

[1.F] d. a processor for processing the sensed information and determining illumination requirements of the at least one of objects, surfaces and beings **[1.G]** using at least one of artificial intelligence, pattern recognition, video analytics, and look-up tables and **[1.H]** for directing the controller to adjust the light source for that sub-area to meet the specific illumination requirement.

2. The illuminating device of claim 1 where the detector is comprising at least

one of (i) a camera being a photo sensor array coupled with an optical lens, (ii) a photo sensor, (iii) an ultrasound transducer and sensor, (iv) microwave transducer and sensor, and (v) pyroelectric detectors.

3. The illumination device of claim 1, wherein the illuminated area is indoors and further comprising a detector for detecting variable illumination from daylight and/or sunlight entering indoors, wherein the controller taking into consideration the intensity variations over the area now illuminated by the daylight and/or sunlight adjusts the light intensity of the directional light sources to meet the varied illumination requirement.

4. The illuminating device of claim 1, **[4.A]** wherein the one or more detectors detects information regarding one or more individuals within the illuminated area, said information is at least one of (i) age, (ii) sex, and (iii) recognition of an individual for matching with stored data about that individual's needs and **[4.B]** wherein the controller adjusts the light intensity and/or spectrum of the illumination provided to the one or more individuals based on illumination requirements from at least one of (i) best practices looked up and calculated from stored data, (ii) age and/or sex of the individual, (iii) personal preferences input to the controller and stored in memory, and (iv) commands received by the controller from an input device.

6. (Cancelled) **[6.P]** An illuminating device having automatic control of the

light provided to an illuminated area comprising: **[6.A]** a structure for incorporating illuminating device elements; **[6.B]** one or more light sources incorporated in the structure and in communication with a power source; **[6.C]** electronic circuitry apparatus for the controlled powering of the light source and other illuminating device elements; **[6.D]** one or more cameras placed on the structure for detecting coordinate-specific information about the illuminated area, said camera in communication with power and control device elements; **[6.E]** a controller integrated with the structure, in communication with the light source controlling power circuitry, said controller arranged to processes the information communicated from the camera and automatically control the light provided to the illuminated area.

7. The illumination device of claim 6, where one or more light sources are directional wherein the one or more detectors are configured to sense a presence of glare on a person's eyes in the illuminated area, and wherein the controller is programmed to adjust an intensity of the directional light sources to reduce the glare.

8. **[8.P]** An illuminating device which provides light to meet an illumination requirement of an illuminated area in which visual activities are performed, where different sub-areas of the illuminated area need to be illuminated at a different intensity and/or at a different spectrum than another sub-area of the illuminated area, comprising: **[8.A]** a light fixture including a multiplicity of directional light sources

including at least two directional light sources pointing in different directions thereby illuminating different sub-areas of the illuminated area, **[8.B]** the light fixture having movable structure for aiming the directional light sources mounted thereon in a defined direction; **[8.C]** a camera for obtaining images of the illuminated area functioning as a detector for at least one of (i) a light detector (ii) a spectrum detector, (iii) a motion detector, (iv) a measuring detector for sensing a geometry of the illuminated area, and (v) a detector for sensing at least one of work surfaces and road objects and at least one of vehicles and people; **[8.D]** a controller for adjusting a light intensity and a direction of each of the directional light sources; **[8.E]** a processor with stored algorithms and data for identifying at least one of (i) tasks being carried out by people, (ii) location of people, (iii) frequency of area usage by people, (iv) traffic density in the illuminated area from the sensed geometry, (v) work surfaces, (vi) road objects, people and/or vehicles, and (vii) roadway surface luminance any of which is used by said processor for determining illumination within the illuminated area using at least one of artificial intelligence, pattern recognition, video analytics, and look-up tables **[8.F]** wherein said processer[6], upon calculating the required illumination parameters according to best practice standards, directs the controller to adjust the directional light sources that

[6] Assume to be the "*processor*" recited in [8.E].

illuminates the specific sub-areas to meet the illumination requirements of the visual activities.

10. The illumination device of claim 8, wherein the controller receives real time information from the camera and wherein the processor, using image recognition capability, directs the controller to adjust at least one of (i) the intensity, (ii) the spectral light distribution and, (iii) the direction of the light sources based on at least one of (i) where people requiring illumination are located, (ii) what object the person is viewing and (iii) what visual task the person needs to perform.

11. The illumination device of claim 8, further comprising at least one of the directional light sources mounted on the movable structure where the movement of the light source direction is automatically controlled by the controller.

12. The illumination device of claim 11, providing a different illumination to a sub-area based on usage wherein the controller interpreting images from the camera adjusts the moveable light sources such that they provide the required illumination in a sub-area proximate to the individuals as they move around in the illuminated area.

13. The illumination device of claim 8, wherein the illuminated area is a road and the objects include road signs.

14. The illumination device of claim 8, further comprising at least one of the directional light sources on an automatic swivel joint and providing spot lights of

limited beam angle for task lighting while other light source provide general illumination to the illuminated area.

15. The illumination device of claim 8, further comprising a controller with communication capability to other devices, where the camera in one location obtains information and the controller process the information and communicates the camera obtained information to a second device.

16. The illumination device of claim 15, where the illuminated area is a road and the second device to where the camera obtained information is communicated to is a lighting fixture.

17. The illumination device of claim 16, where the processor uses information obtained from the cameras and exchanged between fixtures for identifying traffic requirements in the illuminated area and from the vehicles locations and geometry determining the illumination requirements of the illumination area thereby directing the controller to adjust the directional light sources to meet the illumination requirements.

18. The illumination device of claim 17, wherein the controller is programmed to adjust at least one of (i) increase illumination with an approach of a vehicle, and (ii) change beam cut-off levels as the vehicle advances toward the lighting fixture to eliminate glare.

CERTIFICATE OF COMPLIANCE WITH TYPE-VOLUME LIMITATION, TYPEFACE REQUIREMENTS, AND TYPE STYLE REQUIREMENTS

1. This Petition complies with the type-volume limitation of 14,000 words, comprising 13,929 words, excluding the parts exempted by 37 C.F.R. § 42.24(a).

2. This Petition complies with the general format requirements of 37 C.F.R. § 42.6(a) and has been prepared using Microsoft® Word 2010 in 14 point Times New Roman.

Respectfully submitted,

STERNE, KESSLER, GOLDSTEIN & FOX P.L.L.C.

/Michael D. Specht/

Michael D. Specht (Reg. No. 54,463)
Attorney for Petitioner
Volkswagen Group of America, Inc.

Date: December 22, 2022

1100 New York Avenue, N.W.
Washington, D.C. 20005-3934
(202) 371-2600

CERTIFICATION OF SERVICE (37 C.F.R. §§ 42.6(e), 42.105(a))

The undersigned hereby certifies that on December 22, 2022, true and correct copies of the foregoing **PETITION FOR *INTER PARTES* REVIEW OF U.S. PATENT NO. 9,955,551** and all associated exhibits were served in their entireties on the following parties via FedEx Express®:

Brooks Kushman
1000 Town Center
22nd Floor
Southfield, MI 48075
PAIR Correspondence Address for
U.S.P.N. 9,955,551

Respectfully Submitted,

STERNE, KESSLER, GOLDSTEIN & FOX P.L.L.C.

/Michael D. Specht/

Michael D. Specht (Reg. No. 54,463)
Attorney for Petitioner
Volkswagen Group of America, Inc.

Date: December 22, 2022

1100 New York Avenue, N.W.
Washington, D.C. 20005-3934
(202) 371-2600