US008221294B2

(12) **United States Patent**
Publicover

(10) **Patent No.: US 8,221,294 B2**
(45) **Date of Patent: *Jul. 17, 2012**

(54) **TRAMPOLINE SYSTEM**

(75) Inventor: **Mark W. Publicover**, Saratoga, CA (US)

(73) Assignee: **Jumpsport, Inc.**, Saratoga, CA (US)

(*) Notice: Subject to any disclaimer, the term of this patent is extended or adjusted under 35 U.S.C. 154(b) by 0 days.

This patent is subject to a terminal disclaimer.

(21) Appl. No.: **12/834,847**

(22) Filed: **Jul. 12, 2010**

(65) **Prior Publication Data**

US 2011/0039660 A1 Feb. 17, 2011

Related U.S. Application Data

(63) Continuation of application No. 12/389,138, filed on Feb. 19, 2009, now Pat. No. 7,766,795, which is a continuation of application No. 10/639,601, filed on Aug. 11, 2003, now Pat. No. 7,611,443.

(60) Provisional application No. 60/402,338, filed on Aug. 9, 2002, provisional application No. 60/402,429, filed on Aug. 9, 2002.

(51) **Int. Cl.**
A63B 21/00 (2006.01)

(52) **U.S. Cl.** **482/27**; 482/28; 482/29

(58) **Field of Classification Search** 482/27, 482/28, 29

See application file for complete search history.

(56) **References Cited**

U.S. PATENT DOCUMENTS

3,201,126	A	8/1965	Nissen	
5,399,132	A	3/1995	Bailey	
6,053,845	A	4/2000	Publicover	
6,261,207	B1	7/2001	Publicover	
6,319,174	B1	11/2001	Alexander	
6,336,893	B1	1/2002	Chen	
6,679,811	B2	1/2004	Chen	
D570,947	S	6/2008	Horne	
7,611,443	B2 *	11/2009	Publicover	482/27
7,766,795	B2 *	8/2010	Publicover	482/27
2006/0194674	A1	8/2006	Hickey	
2006/0270525	A1	11/2006	Colling	
2008/0269019	A1	10/2008	Lovley, II	
2009/0005221	A1	1/2009	Alexander	
2009/0023558	A1	1/2009	VanElverdinghe	

FOREIGN PATENT DOCUMENTS

FR	2623719	11/1987

OTHER PUBLICATIONS

U.S. Appl. No. 60/050,323, filed Jun. 20, 1997, Publicover.
U.S. Appl. No. 60/052,052, filed Jul. 9, 1997, Publicover.
U.S. Appl. No. 60/087,835, filed Jun. 3, 1998, Publicover.

* cited by examiner

Primary Examiner — Jerome W Donnelly
(74) *Attorney, Agent, or Firm* — Klarquist Sparkman, LLP

(57) **ABSTRACT**

A fence surrounds a trampoline and extends above the rebounding surface, reducing the risk of injury. Shock absorption is aided by a support system of independent poles. Variable placement net fasteners also are detailed.

2 Claims, 8 Drawing Sheets

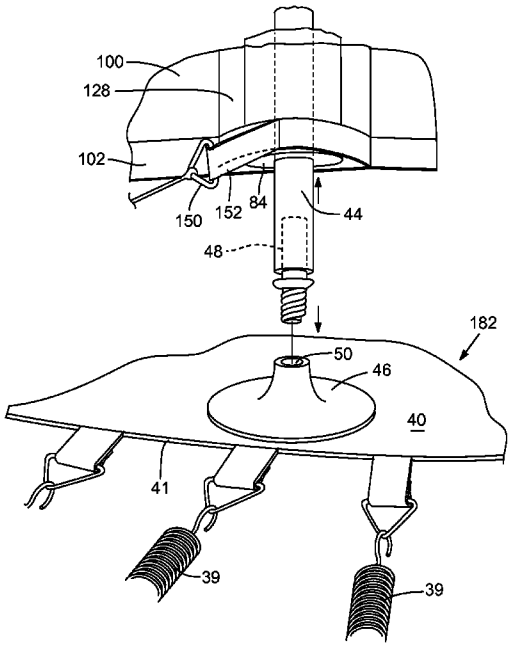

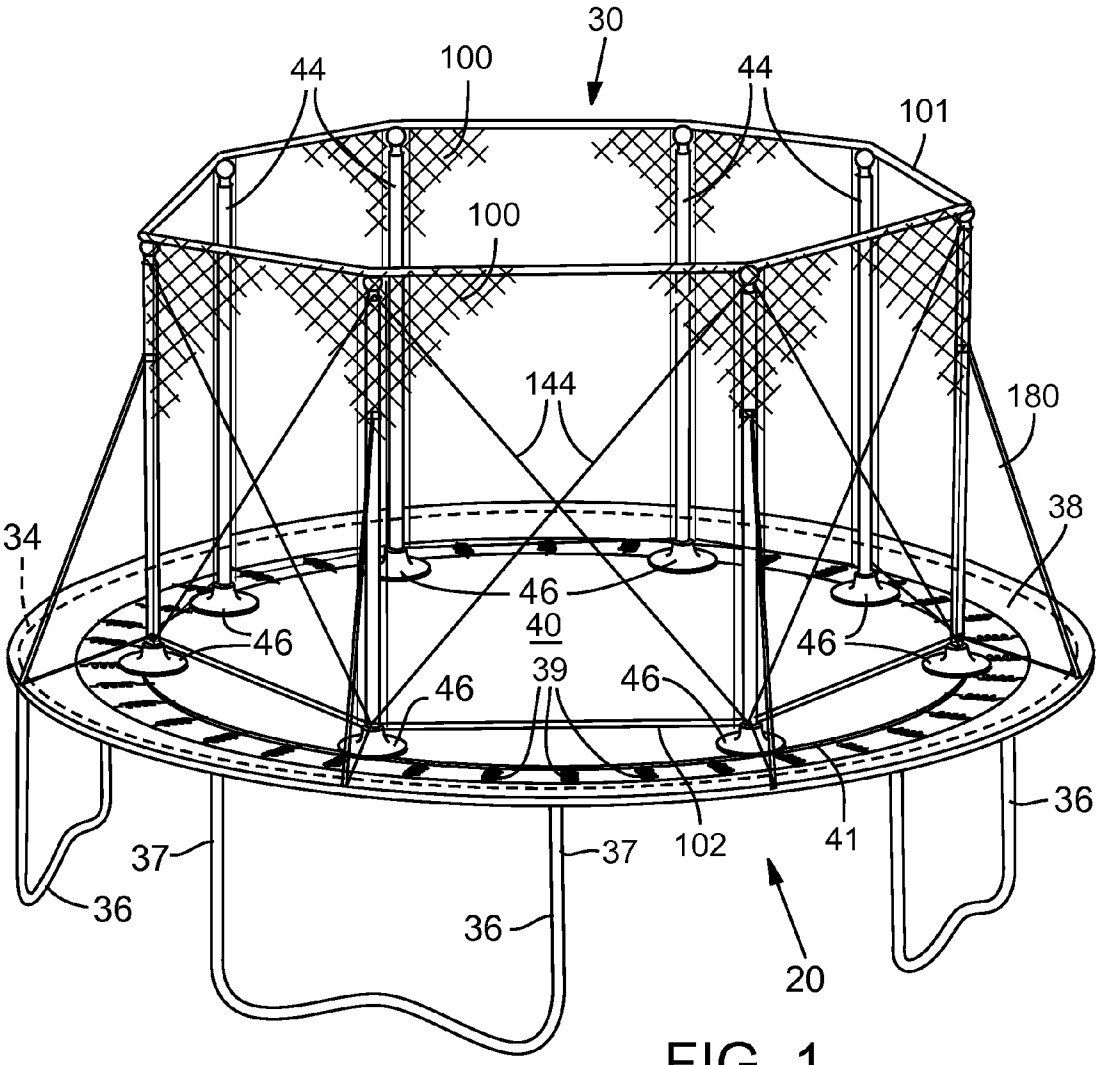
30
44
100
44
101
100
144
180
38
34
46
40
46
46
39
46
46
36
37
37
102
41
36
36
20

FIG. 1

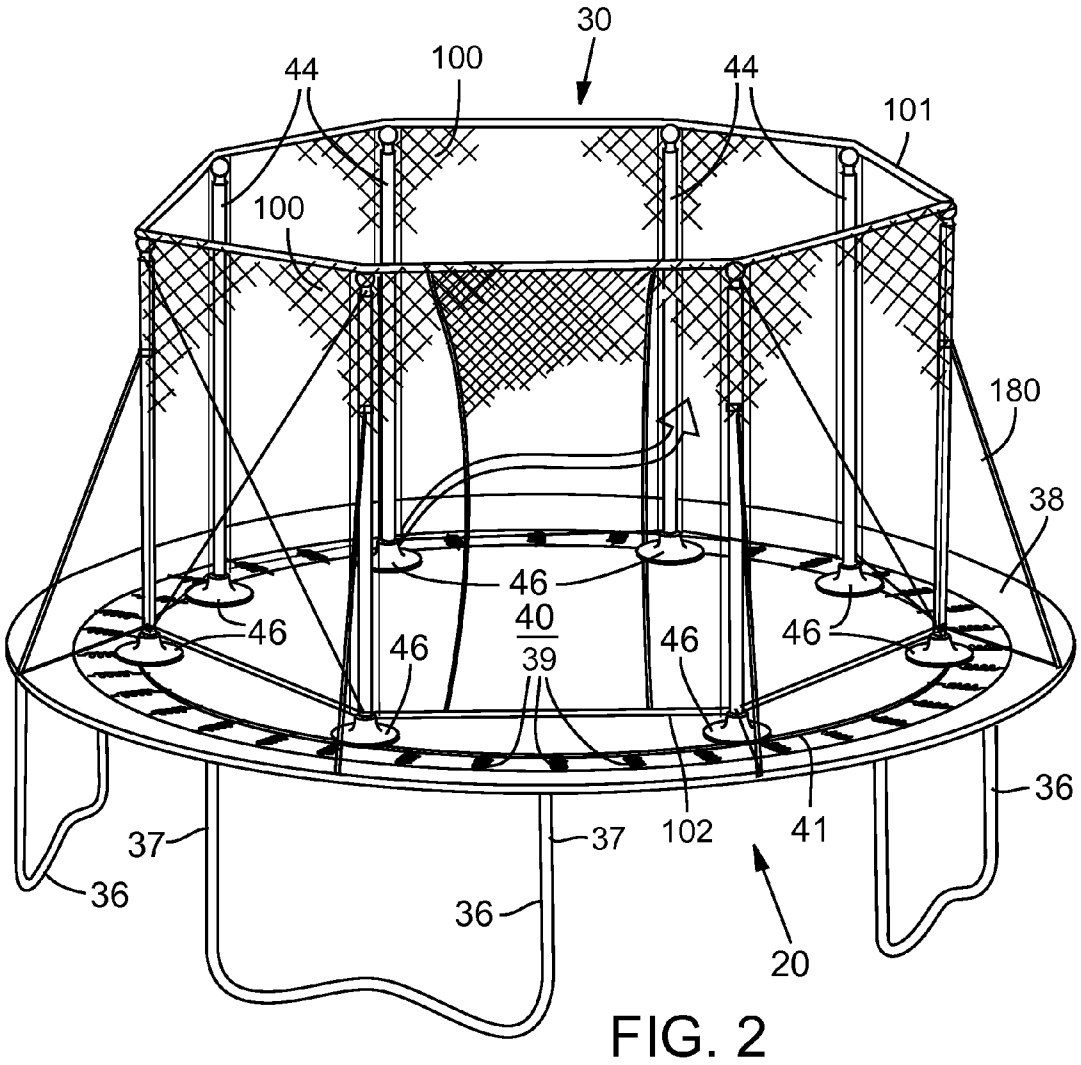
30
44
100
44
101
100
180
38
46
46
40
39
46
46
46
36
37
37
102
41
36
36
20

FIG. 2

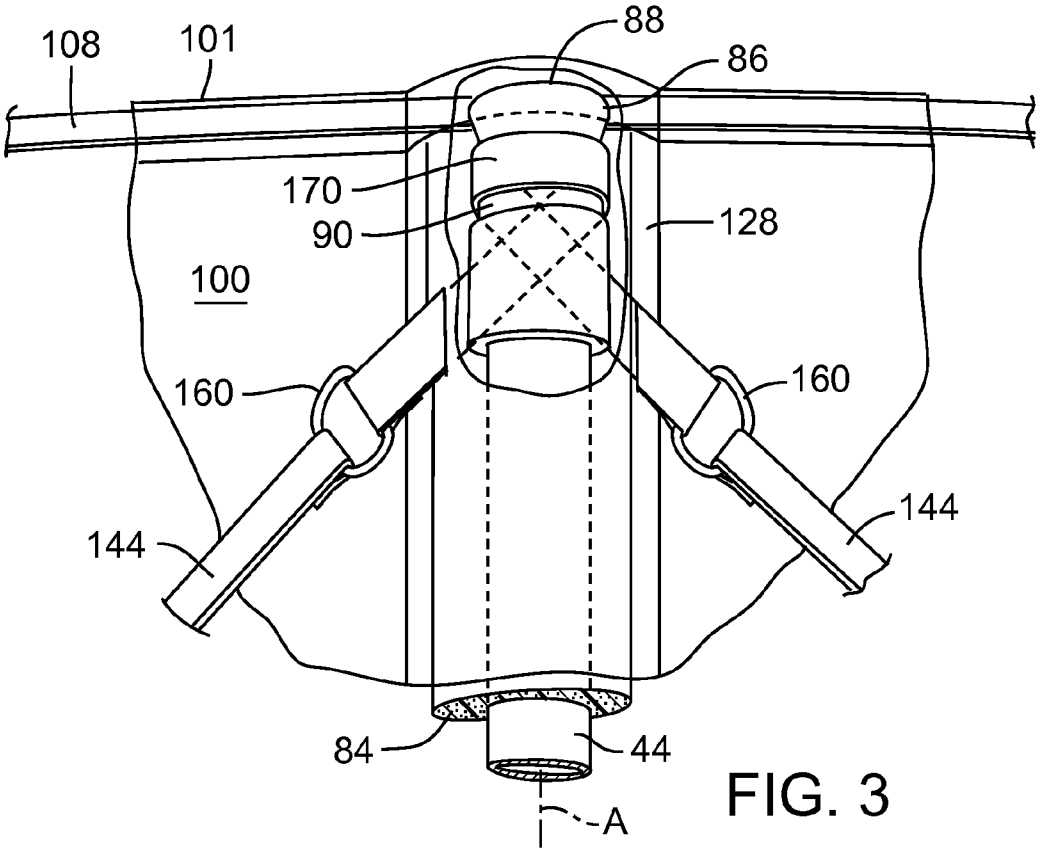
108
101
88
86
170
90
128
100
160
160
144
144
84
44
A

FIG. 3

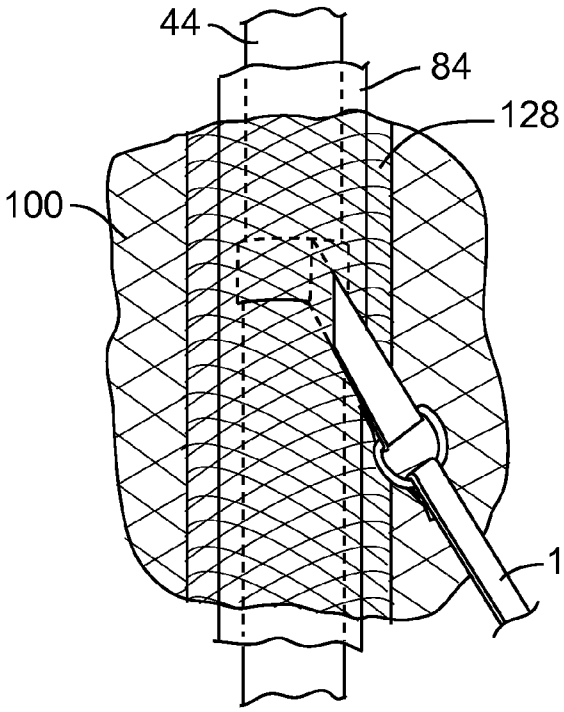
44
84
128
100
180

FIG. 4

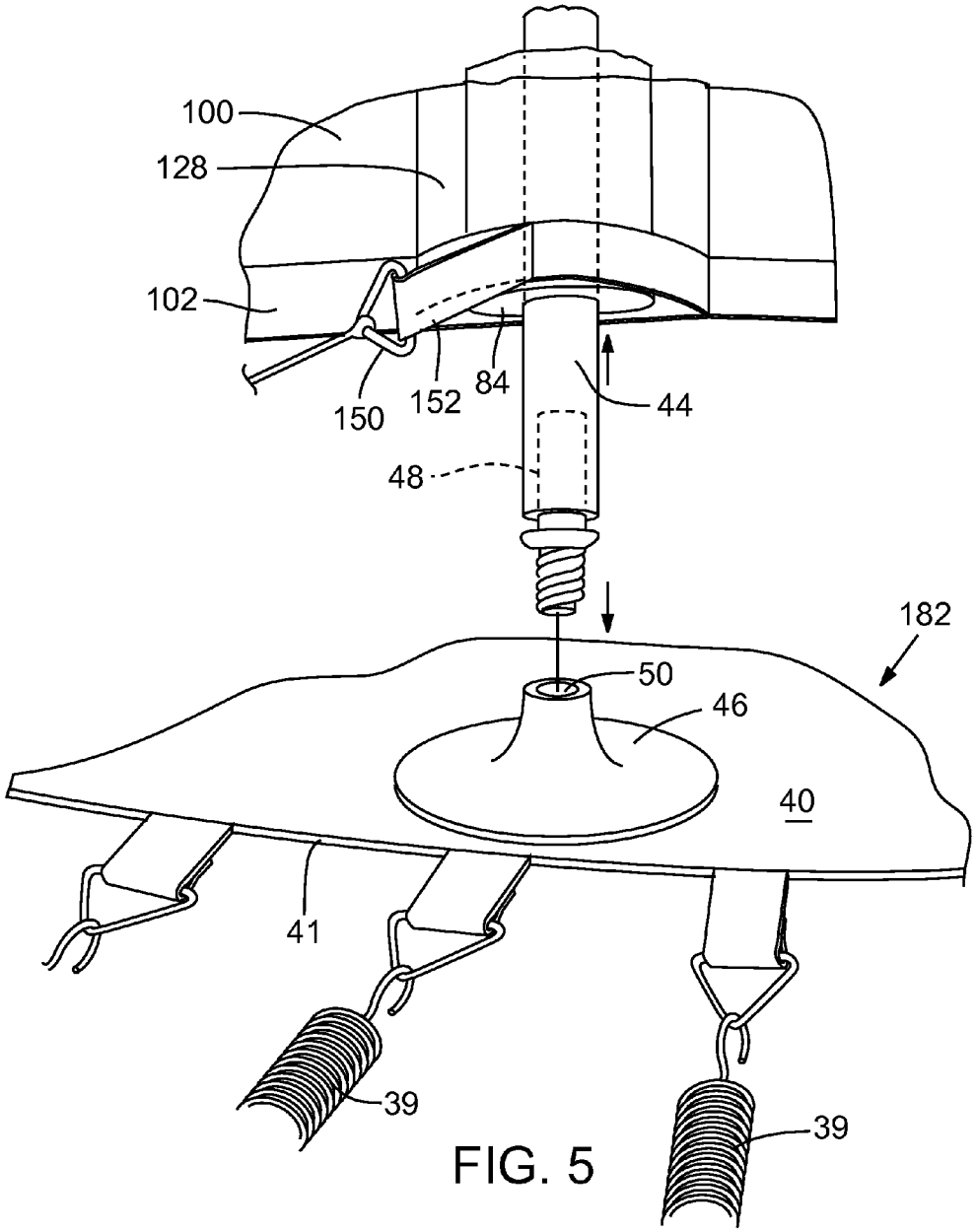

FIG. 5

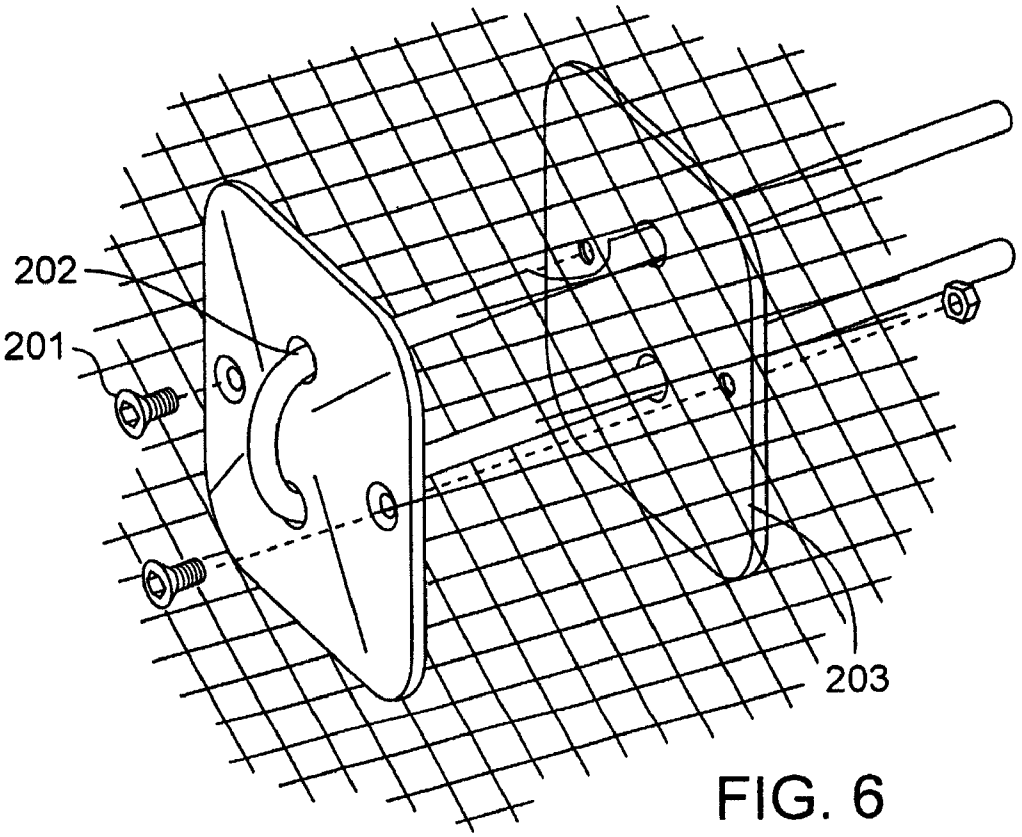

FIG. 6

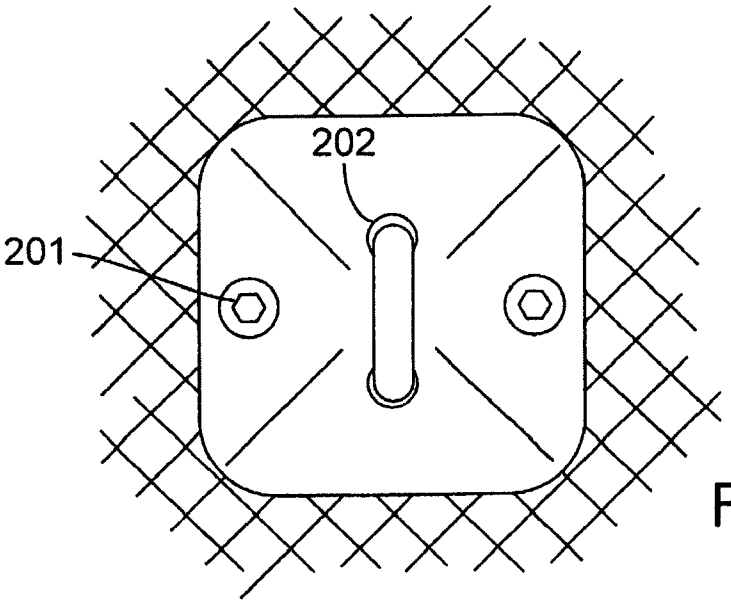

FIG. 7

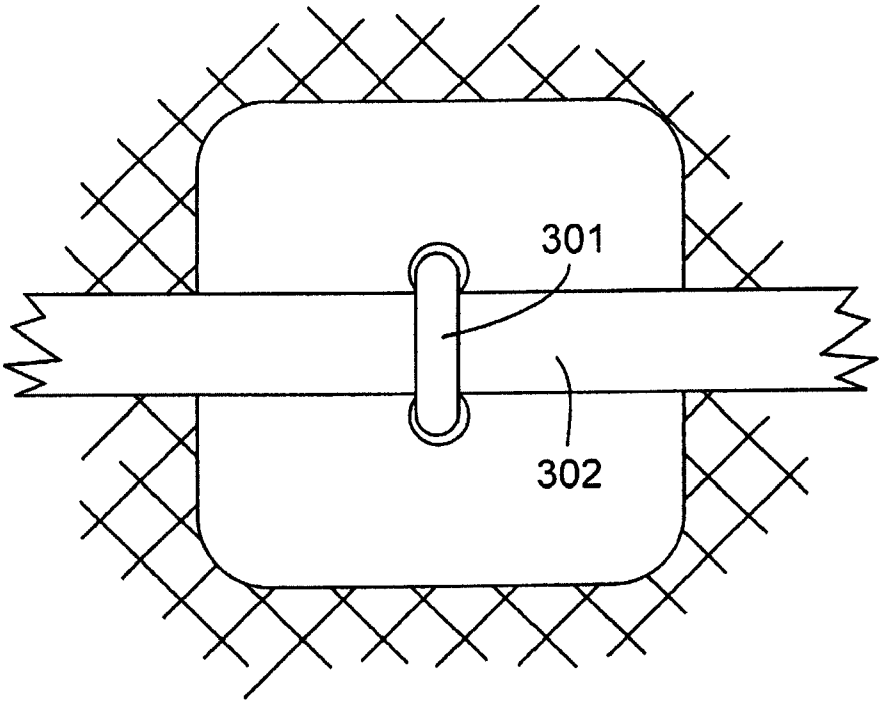

FIG. 8

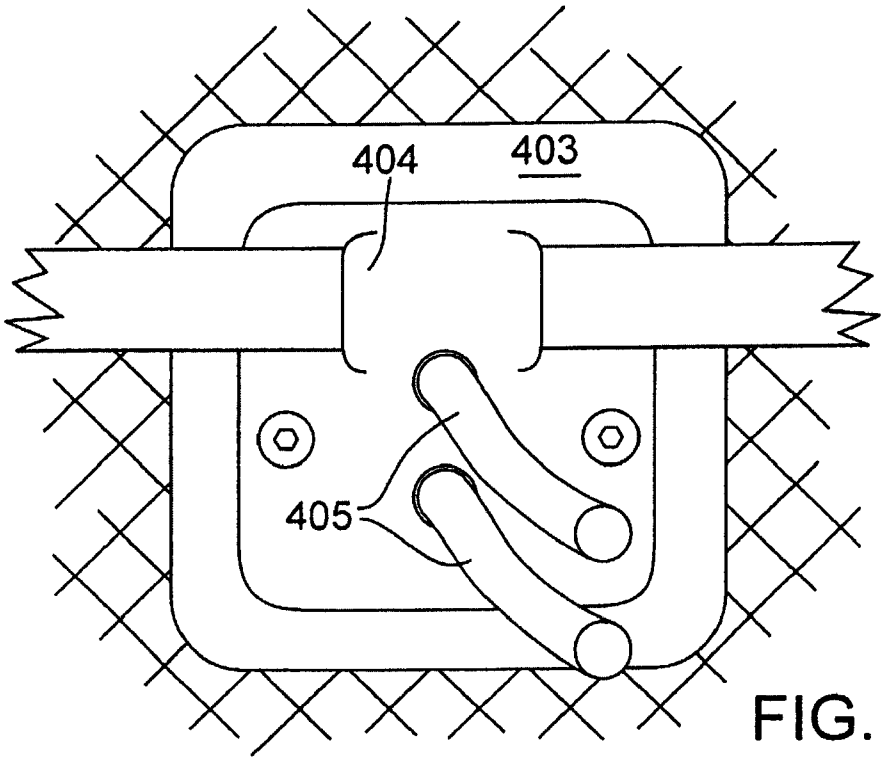

FIG. 9

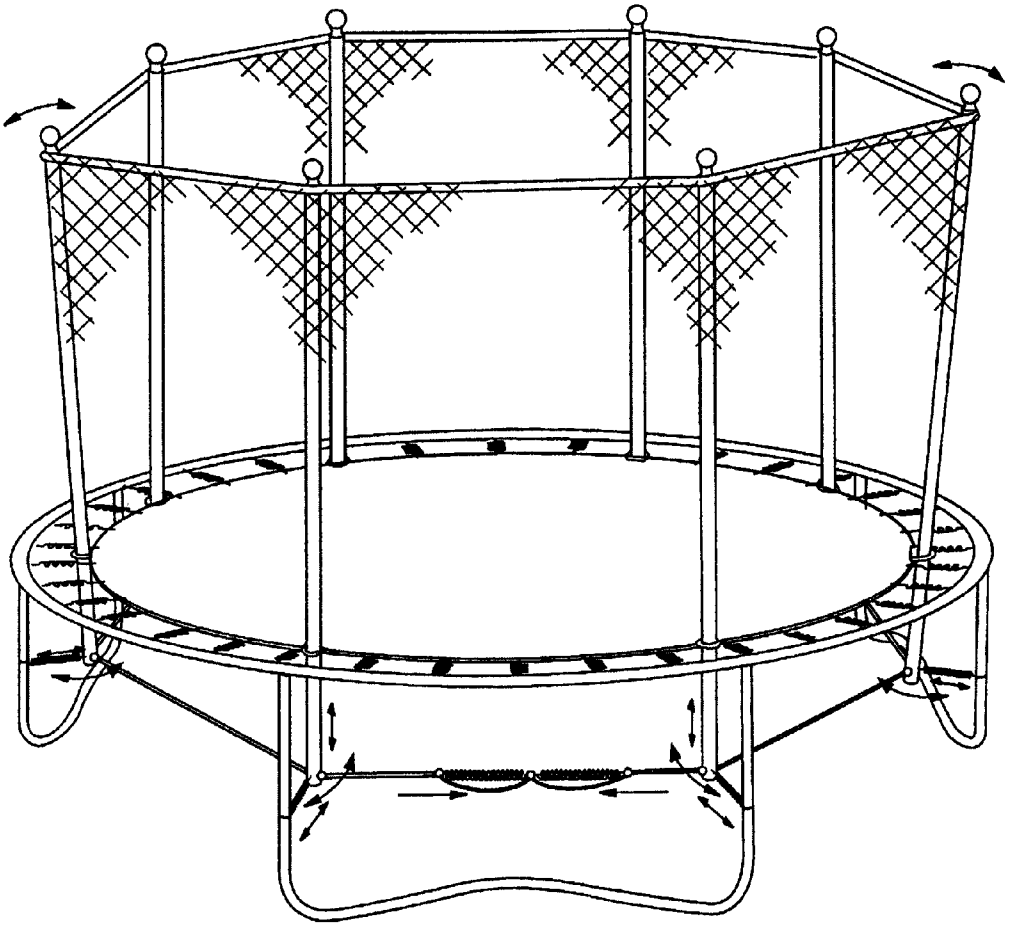

FIG. 10

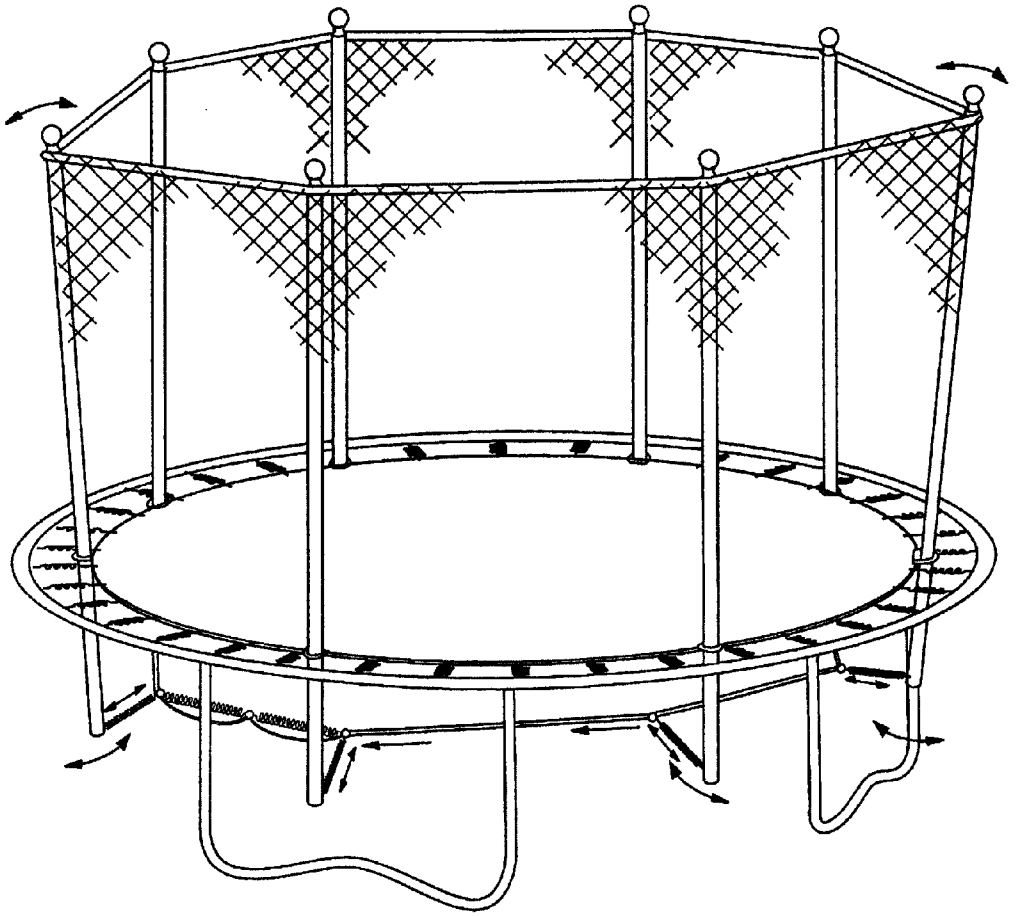

FIG. 11

TRAMPOLINE SYSTEM

CROSS REFERENCE TO RELATED APPLICATIONS

This is a continuation of application Ser. No. 12/389,138, filed Feb. 19, 2009, now U.S. Pat. No. 7,766,795, which is a continuation of application Ser. No. 10/639,601, filed Aug. 11, 2003, now U.S. Pat. No. 7,611,443, which claims the benefit of U.S. Provisional Application No. 60/402,338, filed Aug. 9, 2002, and U.S. Provisional Application No. 60/402,429, filed Aug. 9, 2002, all of which prior applications are incorporated herein by reference in their entireties.

BACKGROUND AND SUMMARY

The present invention concerns wall structures used with trampolines to protect trampoline users.

The entire content of the following patent applications and patents is incorporated herein by reference: U.S. Provisional Application No. 60/050,323, filed Jun. 20, 1997; U.S. Provisional Application No. 60/052,052, filed Jul. 9, 1997; U.S. Provisional Application No. 60/087,835, filed Jun. 3, 1998; U.S. application Ser. No. 09/100,586, filed Jun. 19, 1998, now U.S. Pat. No. 6,053,845, issued Apr. 25, 2000; and U.S. application Ser. No. 09/432,998, filed Nov. 2, 1999, now U.S. Pat. No. 6,261,207, issued Jul. 17, 2001.

BRIEF DESCRIPTION OF THE DRAWINGS

FIG. **1** is an oblique view showing a trampoline apparatus including an enclosure system.

FIG. **2** is an enlarged partial oblique view of a wall portion of the apparatus shown in FIG. **1**.

FIG. **3** is an enlarged partial side view of the apparatus shown in FIG. **1**.

FIG. **4** is an enlarged partial side view of the apparatus shown in FIG. **1**.

FIG. **5** is an enlarged, exploded partial side view of the apparatus shown in FIG. **1**.

FIG. **6** is an exploded view of a variable placement net fastener.

FIG. **7** is a front elevational view of the apparatus shown in FIG. **6**.

FIG. **8** is a front elevational view of the apparatus shown in FIG. **6**, securing a length of webbing.

FIG. **9** is a rear elevational view of a variable placement net fastener securing a length of webbing.

FIG. **10** is an oblique view showing a trampoline apparatus including an enclosure system.

FIG. **11** is an oblique view showing a trampoline apparatus including an enclosure system.

DETAILED DESCRIPTION

Trampolines come in a variety of configurations and sizes. A popular trampoline **20** is shown in FIGS. **1** and **5**. The illustrated trampoline has a circular frame **34** supported by multiple U-shaped tubular legs **36**. The U-shaped legs have two vertically extending sections **37** connected by a horizontal section that rests on the ground. The upper ends of the vertical leg sections **37** are secured to the frame by welds or other forms of attachment. For ease in storage, it is convenient for the legs to be removable. This is made possible by providing a swage joint in each vertical leg section **37**. (In some systems, the legs **36** are not removable but are fixedly secured to the frame. In such systems, it is sometimes desirable to

secure the legs to the ground, as by coupling to screw-in ground anchors. The coupling can be inelastic or elastic.)

In a preferred system, at least the top of frame is covered with a pad **38** that is made of or contains a resilient foam material to help cushion any impact against the frame.

A plurality of spring members **39** tautly attach a sheet of sturdy fabric to the frame so that the fabric provides a bed or mat **41**, the top of which acts as rebounding surface **40**.

Other types of trampolines, having variations in structure such as individual legs secured by bolts or the like, will equally benefit from the present system.

The illustrated trampoline is augmented by a safety enclosure system **30** that provides a protective and interactive environment for a trampoline user. In the illustrated system, plural poles **44** extend vertically with at least the lower half of each pole extending upwardly at more than a 60 degree angle from horizontal. The illustrated system **30** includes poles **44** that are located above the mat **41** and that extend only above the mat, with each pole extending upwardly at an angle of about 90 degrees to the surface of the mat, which extends substantially horizontally. At least some of the poles are supported by base plates **46** that in turn are supported by the surface **40** of the rebounding mat **41**. In the illustrated system, all the poles **44** are supported by base plates **46** and are located inwardly of the perimeter of the rebounding mat **41** and inwardly of the perimeter of the trampoline frame.

In the illustrated system, each pole **44** has a plug **48** that is received in a socket **50** defined in one of the base plates **46**. The illustrated plug and socket have mating threads, but unthreaded plugs and sockets also can be used.

The base plates **46** conveniently may be made of molded rubber or plastic, but also can be made of other materials. For example, a base plate might be made of fabric having an upwardly opening pocket formed to receive the bottom of a pole **44** or a plug **48** at the bottom of a pole. The material and construction should be selected to minimize abrasion between the base plate and the surface **40**.

The illustrated base plates **46** are not fixedly attached to the rebounding surface **40**. One or more straps (not shown) may be provided to connect the base plate to the frame so that the base plate is held in a desired location and cannot move more than a predetermined distance toward the center of the rebounding surface **40**. A single strap might extend inwardly to a pole from one location on the frame and then back from the pole to another location on the frame so that the strap forms a generally V-shape. A portion of such a strap could extend around the base plate or supported pole, or could extend through an opening, ring or loop provided on the base plate. In some instances, a base plate could be affixed to the surface **40**, in which instances a strap would not be required.

Each pole **44** may be covered or partially covered with a layer of padding **84** made from a resilient foam material, with or without a fabric cover. The illustrated padding **84** is a rectangular strip of ¼" inch foam that extends along the pole **44** and that faces the interior of the chamber. Alternatively, the padding may be a rectangular sheet wrapped entirely around the pole **44** and secured by fasteners or a surrounding sleeve. Or the padding may be tubular so that there is no seam. A variety of weather-resistant foam materials can be used. Such foam material serves as cushioning for a person who impacts one of the poles **44**.

In the illustrated system, an end cap **86** is provided as an upper extension of each pole **44**. The end cap has a rounded upper portion **88** and a centrally located neck portion **90**, both of which are concentric to the axis A of the pole **44**. The illustrated cap **86** is made of rubber or a shatter-resistant plastic material.

A generally cylindrical wall **100** of a flexible material is suspended between the poles **44** to define a chamber above the rebounding surface. The illustrated chamber is open at the top as shown in FIG. **1** (although in other systems this may not be the case). The wall **100** has top and bottom edges **101**, **102** and is made of a lightweight plastic sheet material. Particularly suitable is the polypropylene fabric that is commonly used for trampoline beds. This fabric and the other nonmetal elements described herein are best made of materials that are both abrasion-resistant and are resistant to weathering, e.g. by exposure to UV light. Suitable materials generally are made of polypropylene, nylon, high-density polyethylene, or Dacron polyester.

Preferably a hem or other finishing reinforces the top and bottom edges **101**, **102**. Generally, the wall material will be a rectangular piece having a width that is the same as the height of the wall, and a length that is somewhat longer than the circumference of the enclosure.

A support system is provided to hold the wall **100** in place. At the top, a flexible line **108** extends pole-to-pole near the top of the chamber. A reach of the line **108** couples each pair of adjacent poles **44**. In the illustrated system, the line **108** although flexible, is generally inelastic. The line **108** thus allows the tops of the poles to move relative to one another, but the tops of two adjacent poles can not move away from each other to any great extent. The line **108** is made of a sturdy, weather-resistant material such as 1" nylon webbing. Nylon webbing has little elasticity and thus will not sag after it is installed. Webbing is better than rope for line **108** since rope has a relatively low surface area and thus would tend to cut into and abrade the body of a person who bounced into contact with the line **108**. Webbing has a relatively high surface area and automatically rotates so that a flat face of the webbing contacts any impacting body. The flat webbing face distributes resistive force over a greater portion of a person's body and is relatively nonabrasive. The illustrated top line **108** is a single continuous piece that is sewn to the wall **100** along the top edge **101**.

The wall **100** is secured to the upper line **108** along portions thereof extending between the poles **44**. This can be accomplished in a variety of ways. For example, the top line **108** can be sewn to the wall **100** along the top edge **101**. Or the line **108** could extend through a series of horizontally extending sleeves formed along the top edge **101** of the wall.

A similar arrangement can be used to secure the bottom edge **102** of the wall **100** at the periphery of the rebounding surface. For example, a strap of one-inch polypropylene webbing can extend pole-to-pole at an elevation near that of the frame. A reach of the webbing thus extends between each pair of adjacent poles **44**.

The webbing additionally can be secured to the frame **34** at intervals between the poles **44**, by cable ties (not shown) or other fasteners. Also a strip of hook and loop fastening tape, such as VELCRO® tape, can be secured along the bottom edge **102** of the wall **100** and a mating strip of the hook and loop fastening system can be secured to the frame, or to the pad **38** that covers the frame, or to the rebounding surface **40**, so bottom of the wall **100** can be secured by mating both strips of the hook and loop fastening tape system. And other arrangements can be used to secure the bottom edge **102**.

By arrangements such as the foregoing, the fence is constrained in size so as not to encompass any part of the frame within chamber. Desirably, the fence does not extend much—if any—beyond the rebounding surface itself. In some such systems, the annular pad **38** can be omitted except in a gangway region, since the fence will prevent user impacts against the springs **39**.

Desirably, wall **100** is secured to each pole **44** along its vertical length by an arrangement that includes a length of fabric sewn to the wall **100** to form a vertically extending sleeve or tubular pocket **128** that snugly receives a pole **44** and the padding material **84**.

Because the wall material **100** is longer than the circumference of the enclosure, end portions of the wall fabric overlap as shown in FIG. **2** to provide a passageway to permit access to the chamber. Desirably, the overlapping portions are secured so as to prevent a jumper from falling off of the trampoline through the passageway.

If desired, a locking device, such as a padlock, can be used to hold the overlapping end portions together, thereby impeding access to the trampoline surface.

The illustrated enclosure system has walls that are strong but highly resilient. When a person jumps from the trampoline surface **40** and hits the wall **100** of the enclosure, the wall moves a short distance in the direction of the force applied by the user and thereby absorbs energy and cushions the shock. The tops of all the poles **44** in the illustrated system—because they are linked together at the top by the top line **108**—flex toward the impacted portion of the wall panel.

In systems in which the bottom of the netting is attached to the periphery of the flexible rebounding surface **40**, the system can be conceptualized as an arrangement of upright long tubular springs attached to a diaphragm that helps disperse, absorb, and re-cycle impact forces directed at the poles and the net. The diaphragm also transfers these forces to the support system that maintains the diaphragm's elevation. In order to provide the above-described spring effect, the poles **44** should not be rigid. The poles should be sufficiently strong that impacts by trampoline users will not permanently bend the poles. But, the poles **44** should be able to flex to some extent when a trampoline user impacts the wall **100**.

For ease of construction and low cost, the illustrated poles **44** are made of PVC, for example, one-inch Schedule 40 PVC pipe. Other materials, such as ½ inch tubular steel, plastic, fiberglass, graphite, carbon fiber, Kevlar, etc., can be used if they have appropriate strength and flexibility characteristics. The particular material(s) can be selected to tailor the flexibility, elasticity, and strength of the resultant system as desired.

As most clearly seen in FIG. **1**, cross-bracing straps **144** are provided to limit the movement of adjacent poles **44** toward or away from one another. A preferred cross-bracing material is substantially inelastic nylon webbing; plastic or metal cable could also be used. The cross-bracing extends, in pairs of crossing reaches, from positions near the upper end portions of two adjacent poles **44** to positions that are near the elevation of the frame, so that an X-shaped pair of straps extend between each pair of adjacent poles **44**.

In the illustrated system, V-rings **150** are provided at the base of each sleeve **128** and are held by fabric loops **152**. The v-rings serve as attachments for the bottom ends of the cross-bracing straps and/or a bottom strap that extends along the edge **102**. Or a second ring (not shown) may be held by each cloth loop at the bottom, so that one ring attaches to the cross-bracing strap **144** and the other ring attaches to a strap that extends along the bottom edge **120**. At the top of each pole, D-rings **160** are held by fabric loops and provide attachments for the top ends of the cross-bracing straps. The fabric loops may be at the ends of a band **170** of fabric that chokingly encircles the cap **86** as shown. Or a band of fabric, with a ring at each end, could extend across and be supported by the top of a cap with the band in a generally inverted V-shape (not shown). Portions of the illustrated band **170** extend through buttonhole openings on opposite sides of the sleeve **128**, with

the D-rings located outside the sleeves. Other types of attachments for the cross-bracing straps could be provided at the tops and the bottoms of the poles.

Additional bracing may be provided for a pole **44** by a strap **180** that extends from the pole **44** to the frame. The straps **180** extend outwardly and downwardly from the poles **44**, preferably from locations nearer the tops of the poles than the bottoms. A spring (not shown) is provided between the top and bottom attachment points of a strap **180** to provide elasticity. Most conveniently the spring is located at the top, between the top end of a guy strap **180** and the pole **44** to which that strap is attached.

The trampoline and enclosure are configured in such a way that an impact to the enclosure causes at least one entire pole to move downwardly. Due to the way in which the poles are coupled to the trampoline, the downwardly moved pole or poles force the rebounding mat **41** to move downwardly. And one or more of the spring members **39** may be moved downwardly as well. For example, in the embodiment of FIG. **1**, a resilient mechanism **182** is provided by one or more spring members **39** and the mat **41** which are connected between at least one of the poles and the frame with the poles supported by the mat and connected to the spring members via the mat. The resilient mechanism stores energy upon an impact to the enclosure which causes at least one entire pole to move downwardly and releases energy to return the at least one entire pole upwardly once the impact force is removed.

The fence can serve as more than a passive safety restraint, but rather can form another rebounding surface. That is, the fence serves to store, and subsequently return, a substantial percentage of any impact energy, thereby propelling a jumper back onto the horizontal trampoline surface. Although there are no standardized metrics in the industry, one useful measurement is the percentage of energy returned to a substantially inelastic 100 pound object that horizontally impacts the fence netting at a location midway between the upright support poles, and midway up the height of the fence ("horizontal rebound factor"). Desirably, the horizontal rebound factor is at least 10%. By suitable selection of netting and support materials, and tensioning of the various members, significantly lower or higher horizontal rebound factors can be achieved, such as 1%, 5%, 20%, 30%, or 40%, or more.

The tops of the poles may be constructed to flex downwardly towards each other and towards the area of impact (just like loading a bow for shooting arrows, as noted earlier), so it is possible for the fence system to conserve more of the impact force energy in the poles, enabling the system more efficiently to recycle this energy back into the impacting body. Top line **108** serves as a mechanism for transferring such loads between the poles. The freedom of motion afforded by line **108** enables the net to more completely conform to the surface of an impacting body, distributing the forces of impact over a larger surface area on the body, thereby reducing the likelihood of injury.

As will be recognized by the artisan, numerous modifications and additions (and deletions) can readily be made to the above-detailed systems while maintaining the same general structures.

For example, there are alternative methods for securing the top line **108** to the poles **44**. And the attachment of the wall to the poles can be different. Although not preferred, the wall fabric can be attached to the poles with cable ties or the like. In still other systems, the tubular vertical pocket **128** can be formed a distance away from the cylindrical wall, with the intervening space reinforced by vertical nylon webbing.

In still other systems, the net can be positioned outside the poles **44**, rather than inside. For example, the strips of fabric that form the sleeves **128** can be sewn to the inwardly facing surface of the wall **100** instead of to the outwardly facing surface.

Still further, the net can be suspended inside one pole and outside the adjacent poles, or in other in/out configurations, depending on the particular impact absorption requirements desired.

The protective caps **86** on the ends of the fence poles can have various forms. For example, a domed cap can be used, manufactured of a somewhat soft material to dampen impacts, while still providing protection from the top end of the support pole. The cap can be filled with foam or caulk for increased shock absorbency. The cap can also be provided with an accordion-type wall configuration, to enhance its shock absorbing ability. Combinations of the above-described end caps are similarly advantageous. While the illustrated cap is a sleeve that fits over a pole **44**, the cap could just as easily be a plug that is received in the top opening of a tubular pole **44**.

Variable Placement Net Fasteners

Due to the fact that there are a wide variety of sizes and configurations of trampolines on the market, a sound objective is to have a safety enclosure system that is compatible with most or all of them. Wide range compatibility is intrinsic to our (current) woven, open-mesh net system, but is not obvious when using a more finely woven fabric-like net. Typical with such a material, the fastening points (locations on the net where it can be connected to the structural members) are fixed in place at specific locations. (As a quick review, these fixed points on the net are determined by the locations of the vertical support poles. The pole locations are determined by the locations of the legs of the trampoline, which vary from one manufacturer to the next.) If employing the fixed-point configuration, the dimensions of various size trampolines need to be obtained, averaged, and the fasteners would be sewn at fixed points based on the calculations. All this would equate to extra costs associated with manufacturing, and possible confusion to the customer. Equally problematic, fabric-like nets for use in a fall prevention system are only as strong as the weakest "link." Because of their loosely woven nature, the weakest part of the net system occurs at the sewn fastening locations, and usually begins to separate at the extremities (i.e., the outmost stitched points).

In order to make a woven, fabric-like safety net readily compatible with trampolines of various sizes and shapes, and to address the fail-factor associated with sewing, we can employ the use of variable placement net fasteners. One such fastener, illustrated in FIGS. **6-7**, would "sandwich" the net fabric between two rigid pieces of plastic (or other). The inner side of each fastener piece can have corresponding male/female connection points that would snap together through the net, be ribbed/grooved to generate friction (the grooves potentially matching the fabric pattern), be concave/convex, or utilize a frictional/cushion membrane as shown in FIG. **9**. The pieces may be clamped together with one or more screws, so that any force exerted on the fastener would be distributed equally over the entire area of net "sandwiched" by the fastener. Two holes near the center of each fastener piece allow an elastic/inelastic cord/strap to be inserted and looped through the fastener, and then attached to a support pole. This configuration enables force to be distributed over the entire fastener assembly, instead of over only one piece of the fastener, and additionally distributes the force over a large surface area of the netting.

The walls of the fastener may be tapered, so that the edges are more pliable, allowing for some of the impact forces to be absorbed in the action of the fastener itself—or an inner friction/cushion membrane may extend out of the fastener with similar results.

Webbing, incorporated with variable placement fasteners, can increase the amount of force a system can withstand. Webbing, running the circumference of the net, can either be fed through an eyelet on the fastener, or through the loop of elastic/inelastic cord formed at each fastener as illustrated in FIG. **8** and FIG. **9**. When included, the webbing further helps to disburse forces to the other structural members of the system, thereby reducing forces placed directly on the net at each fastener.

Twisted Bungee Cords

When two ends of a bungee are fastened together, the resulting loop formed can be installed over a vertical pole (or end cap), twisted, and then attached to the net. Twisting the bungee is a unique feature when applied to a safety enclosure because it 1) creates a choke-hold to the pole, making the bungee less prone to slide down the pole, and 2) may distribute the forces of an impact more equally between the two strands (twists) of cord.

Multipurpose Protector Cap

Foam pads (covering support poles) not only protect users from coming into direct contact with support poles, they also help to absorb and distribute forces applied to the safety enclosure system. Likewise, the covers for the ends of the foam pieces not only protect the ends of the foam from deterioration, they can also aid in securing straps/cords that hold the net in place, allowing for the absorption property of the foam to be utilized.

Foam under protective caps also enables the foam to absorb some impact force when a protective cap is struck.

In view of the many embodiments in which the principles detailed above can be employed, it should be recognized that the disclosed systems are illustrative only and should not be taken as limiting the scope of the invention. For example, in some arrangements plugs may extend upwardly from the mat to be received in openings at the bottom ends of the poles to position the poles above the mat. Or upwardly opening cups or pockets could be provided in the mat or at the perimeter of the mat to receive the bottoms of the poles. The bottoms of the poles also could be attached to the mat by VELCRO® fasteners.

In other arrangements, poles may extend partially below the level of the mat as shown in FIGS. **10-11**, and may be connected to the springs such that downward motion of a pole causes one or more springs to move downwardly, which in turn may cause a portion of the mat to move downwardly. And in some arrangements, lengths of PVC pipe or the like can be substituted for the top line.

The invention claimed is:

1. A trampoline system having an enclosure, comprising:

a trampoline comprising a frame and a rebounding mat coupled to the frame via plural spring members; and

an enclosure comprising plural upright poles that extend above the level of the mat and an expanse of flexible material coupled to the poles to define the enclosure, with at least some of the poles being mounted to pivot relative to the mat and having a lower portion that extends below the level of the mat to a bottom end, with at least some of the lower portions being connected to one another by at least one member adapted to urge the bottom ends toward the vertical centerline of the trampoline.

2. A trampoline system having an enclosure, comprising:

a trampoline comprising a frame and a rebounding mat coupled to the frame via plural spring members; and

an enclosure comprising plural upright poles that extend above the level of the mat and an expanse of flexible material coupled to the poles to define the enclosure, with at least some of the poles being mounted to pivot relative to the mat, having an upper portion that extends above the level of the mat, and having a lower portion that extends below the level of the mat to a bottom end, with at least some of the lower portions being connected to one another by at least one member adapted to urge the bottom ends toward positions wherein the upper portions of the poles extend generally vertically.

* * * * *