US006053845A

United States Patent [19]

Publicover et al.

[11] **Patent Number: 6,053,845**

[45] **Date of Patent: Apr. 25, 2000**

[54] **TRAMPOLINE OR THE LIKE WITH ENCLOSURE**

[75] Inventors: **Mark W. Publicover**, Saratoga; **Jon H. Greiner**, Palo Alto, both of Calif.; **J. Scott Publicover**, Boise, Id.; **Byron L. Bertsch**, San Jose, Calif.

[73] Assignee: **Jumpsport, LLC**, Saratoga, Calif.

[21] Appl. No.: **09/100,586**

[22] Filed: **Jun. 19, 1998**

Related U.S. Application Data

[60] Provisional application No. 60/050,323, Jun. 20, 1997, provisional application No. 60/052,052, Jul. 9, 1997, and provisional application No. 60/087,835, Jun. 3, 1998.

[51] **Int. Cl.**[7] **A63B 5/11**

[52] **U.S. Cl.** **482/35**; 482/27; 482/28

[58] **Field of Search** 52/239; 5/99.1; 160/135; 256/73, 5, 1, 11; 482/27, 28

[56] **References Cited**

U.S. PATENT DOCUMENTS

D. 382,618	8/1997	Gift .	
3,201,126	8/1965	Nissen .	
3,339,925	9/1967	Nissen .	
3,837,643	9/1974	Lee .	
4,284,271	8/1981	Pettit et al. .	
4,413,361	11/1983	Wolf et al. .	
4,433,838	2/1984	Gordon .	
4,478,420	10/1984	Sowards .	
4,569,515	2/1986	Gordon .	
4,598,905	7/1986	Vrana .	
4,644,892	2/1987	Fisher .	
4,776,581	10/1988	Shepherdson .	
4,836,530	6/1989	Stanley, Jr. .	
4,900,011	2/1990	Nolet .	
5,010,603	4/1991	Hertzog .	
5,390,913	2/1995	Kepler .	
5,399,132	3/1995	Bailey .	
5,545,110	8/1996	Hsiang .	
5,575,738	11/1996	Millington et al. .	
5,664,769	9/1997	Sadinsky et al.	256/73
5,711,743	1/1998	Nichols, Jr. et al. .	

FOREIGN PATENT DOCUMENTS

256293	2/1964	Australia .
2623719	6/1989	France .

Primary Examiner—Jerome W. Donnelly
Attorney, Agent, or Firm—Klarquist Sparkman Campbell Leigh & Whinston, LLP

[57] **ABSTRACT**

A fence surrounds a trampoline and extends above the rebounding surface, reducing the risk of injury. Shock absorption is aided in the preferred embodiment by a support system of independent poles, linked at their tops by a flexible strap or line. An impact anywhere on the fence causes the posts to flex inwardly, absorbing the force. Much of this impact injury is stored in system components and is subsequently returned, helping propel an errant jumper back onto to the rebounding surface. Numerous other embodiments and accessories are also detailed. Similar arrangements are suitable for use with above ground pools.

17 Claims, 10 Drawing Sheets

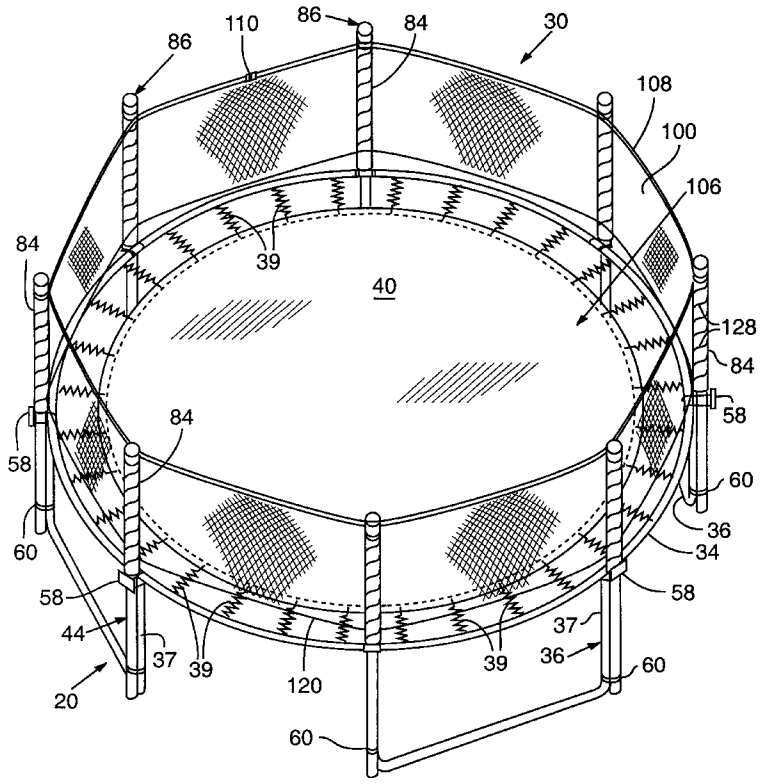

FIG. 1

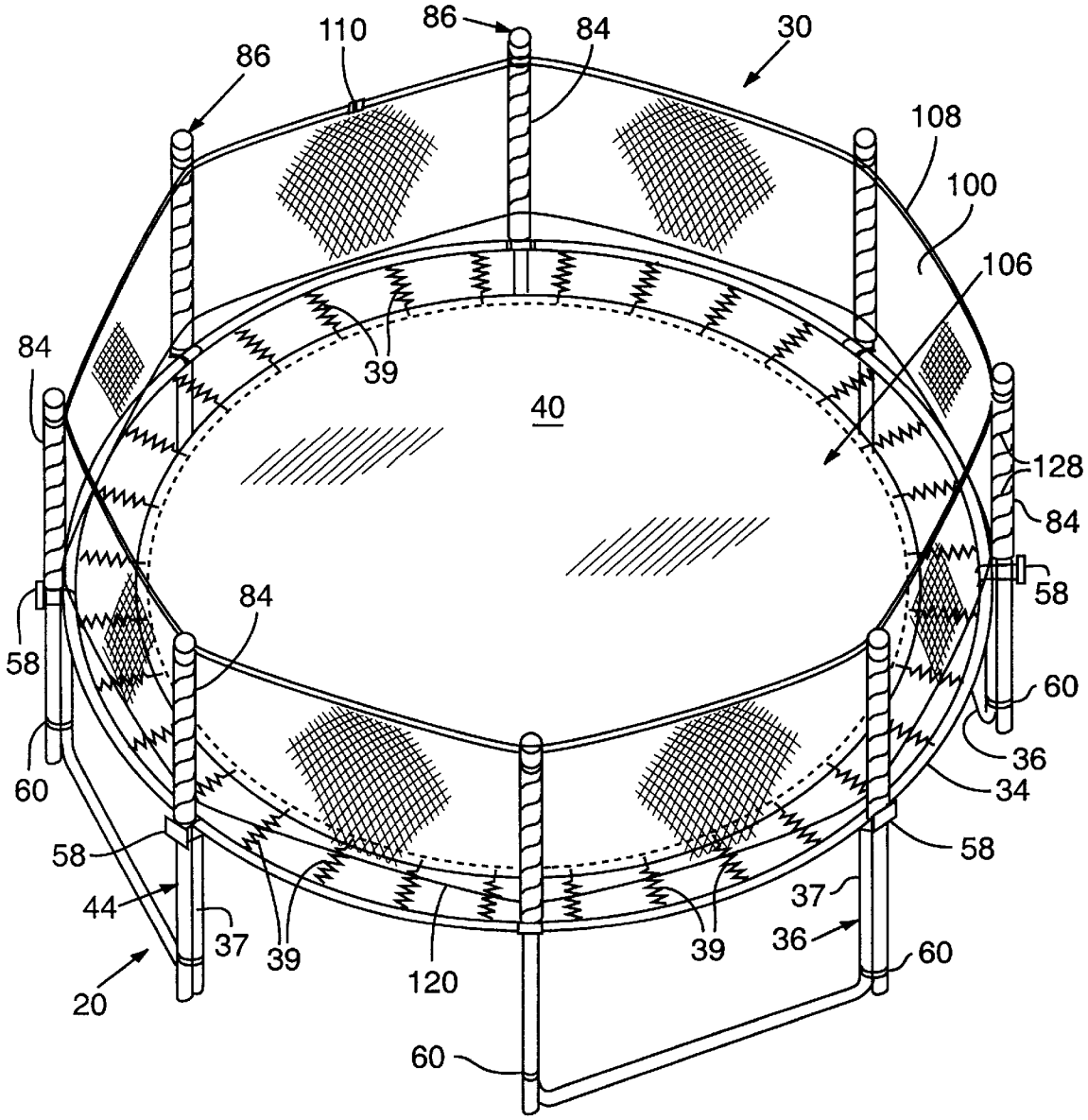
86
110
86
84
30
108
100
106
84
39
40
128
84
58
84
58
60
60
36
34
58
58
44
37
39
120
39
37
36
60
20
60

FIG. 2

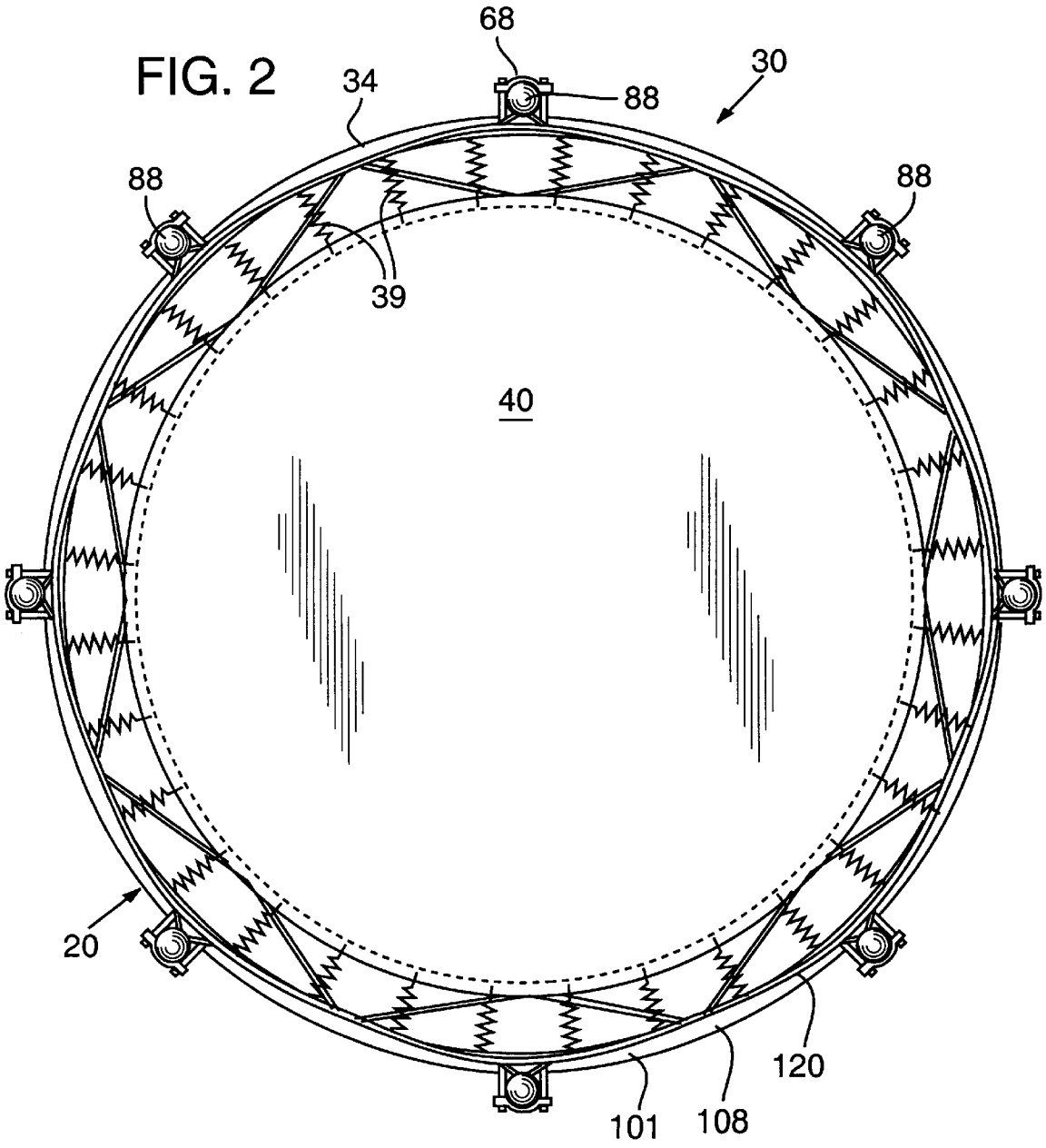

FIG. 3

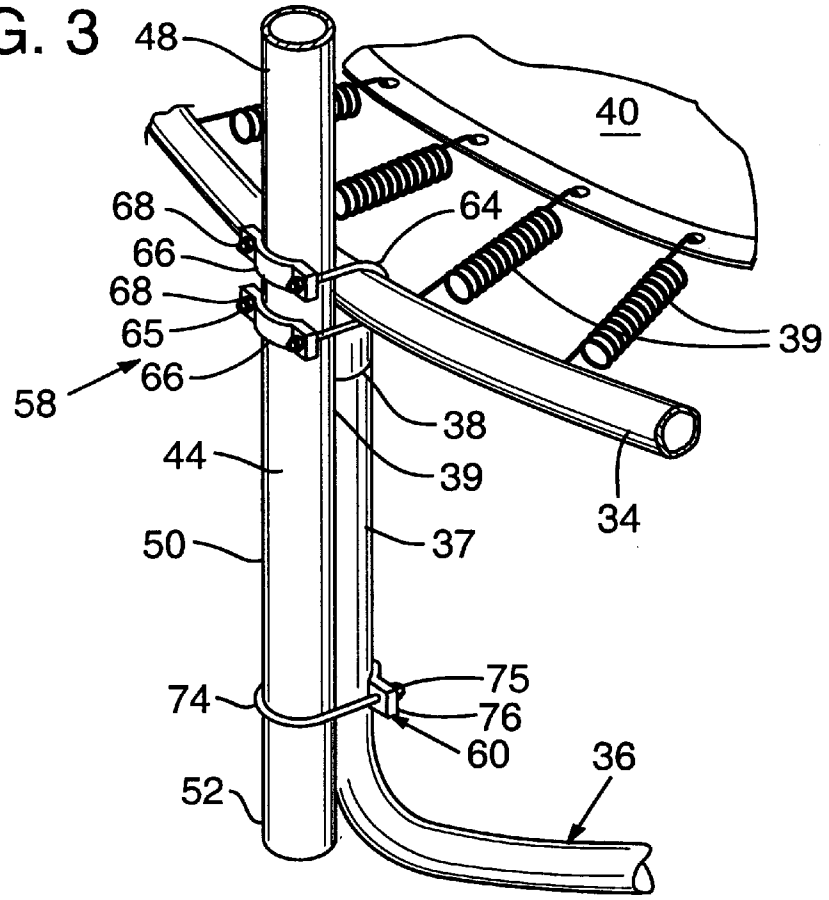
48
40
68
64
66
68
65
39
58
66
38
44
39
34
50
37
75
74
76
60
36
52

FIG. 7

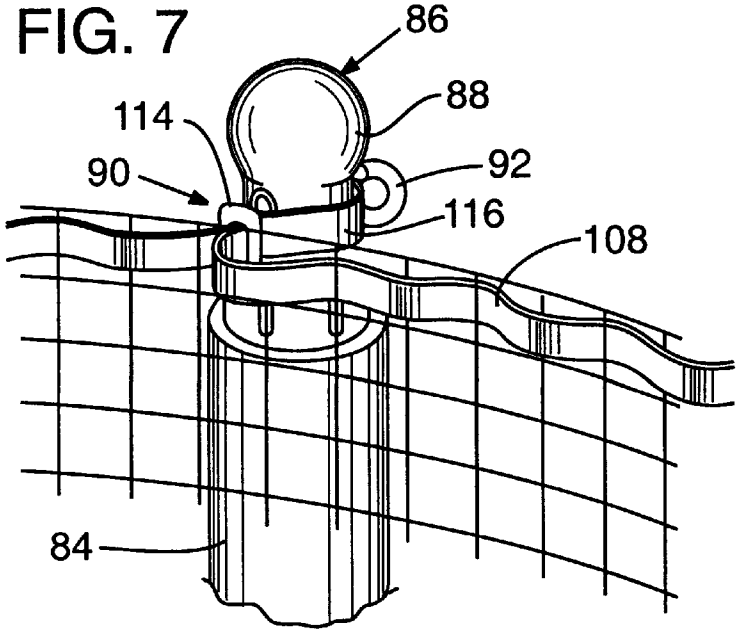
86
88
114
92
90
116
108
84

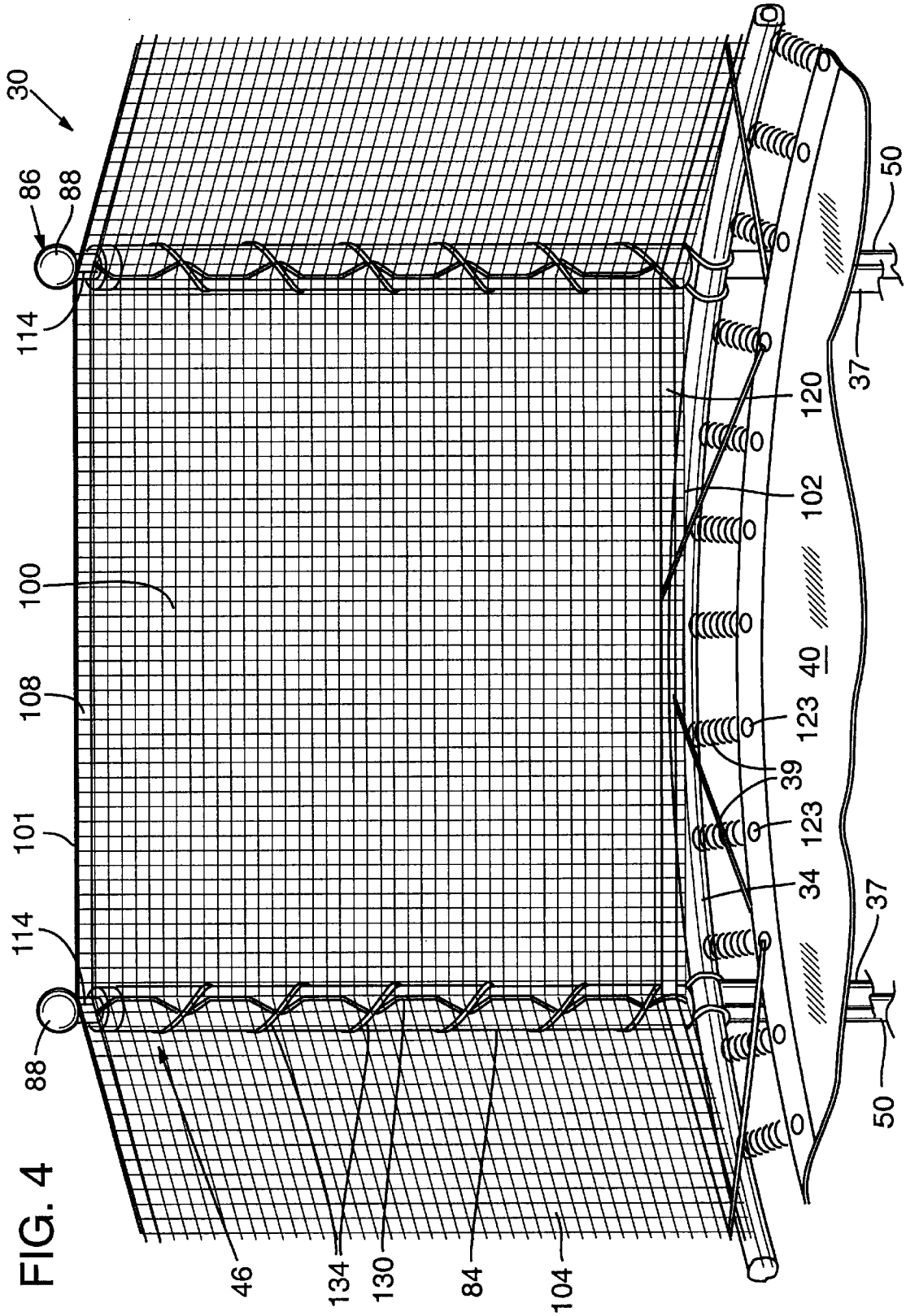
30
86
88
114
100
108
101
114
88
46
134
130
84
104
50
37
120
102
40
123
39
123
34
37
50

FIG. 4

FIG. 5

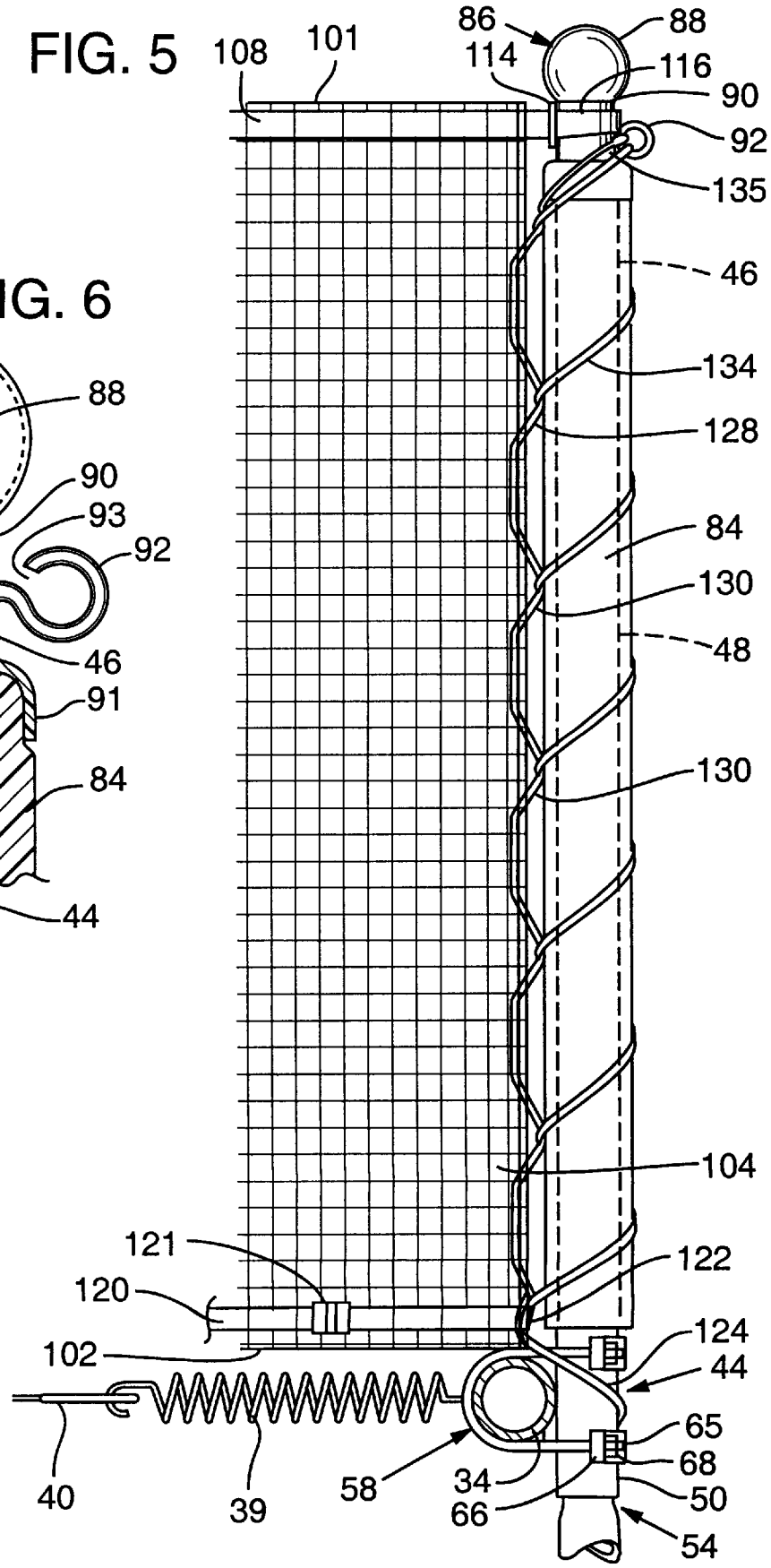
108
101
86
114
88
116
90
92
135
46
134
128
84
130
48
130
104
121
122
120
124
102
44
65
68
40
39
58
34
66
50
54

FIG. 6

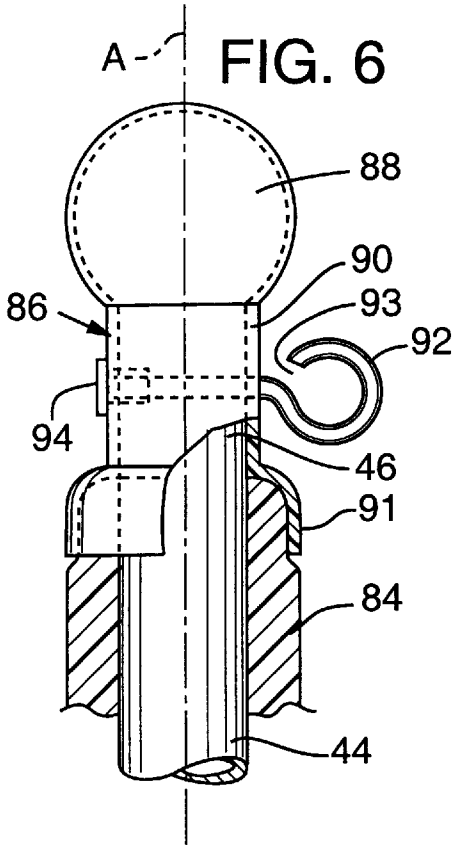
A
88
90
86
93
92
94
46
91
84
44

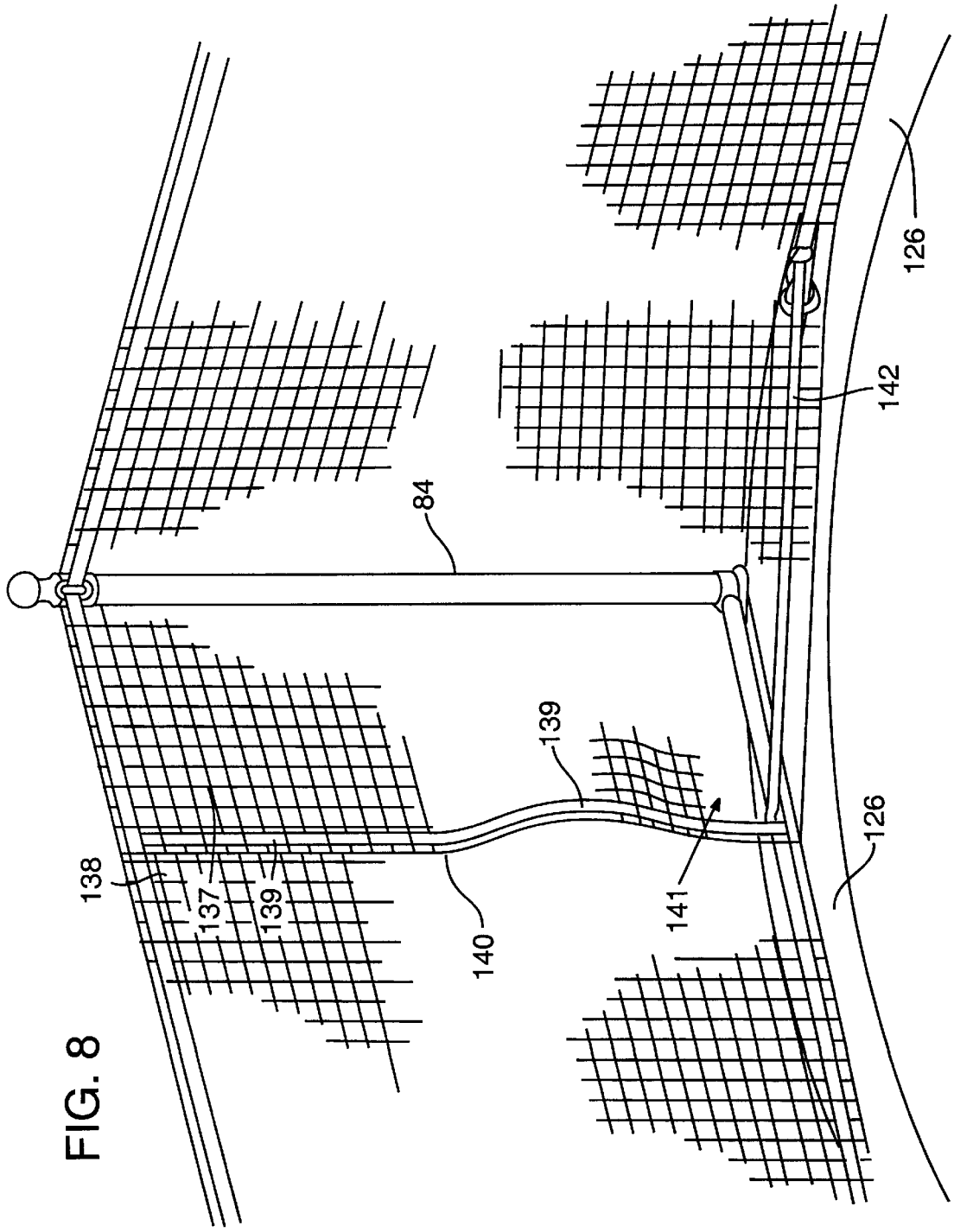

FIG. 8

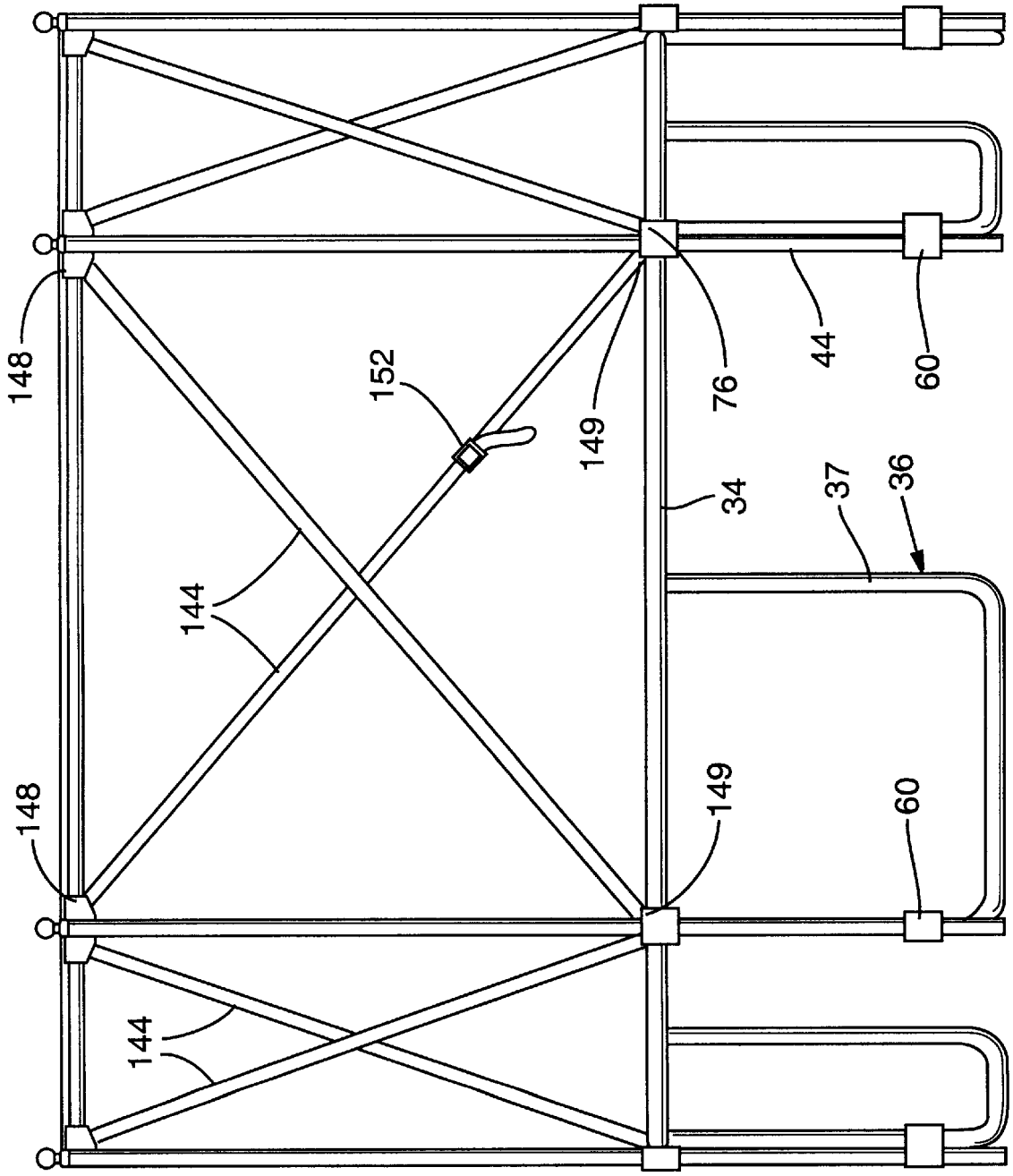

FIG. 9

FIG. 10

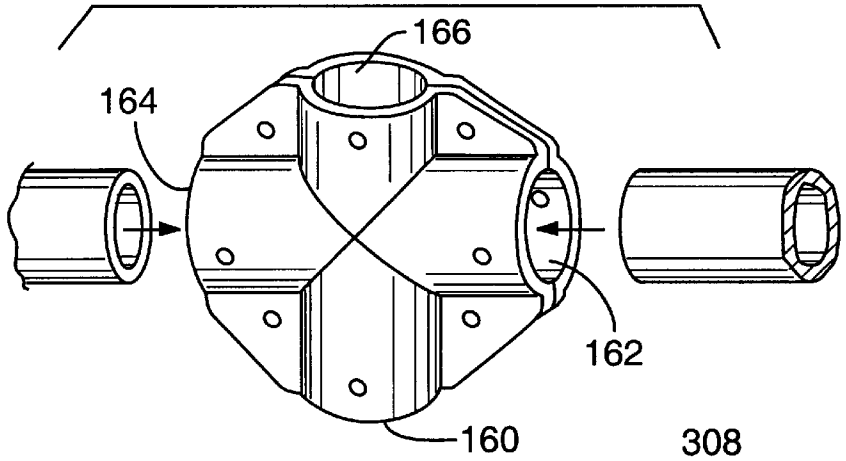

FIG. 14

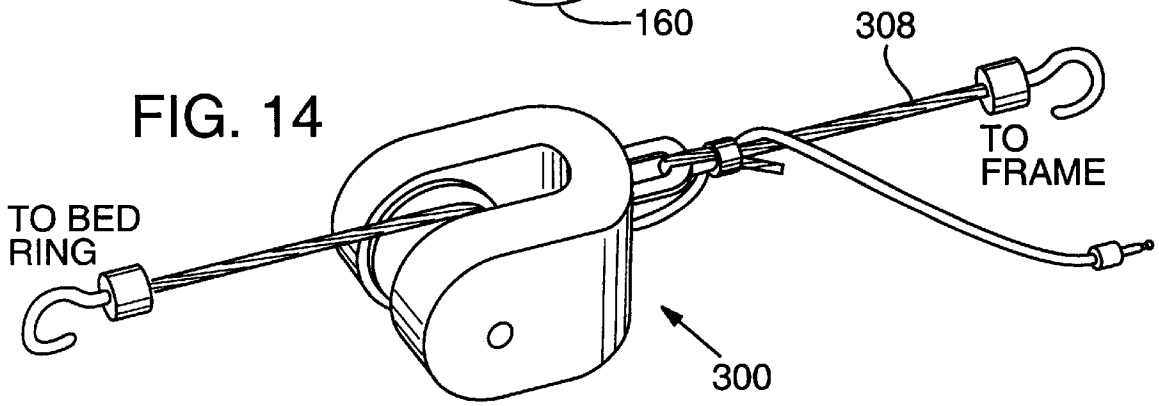

FIG. 15

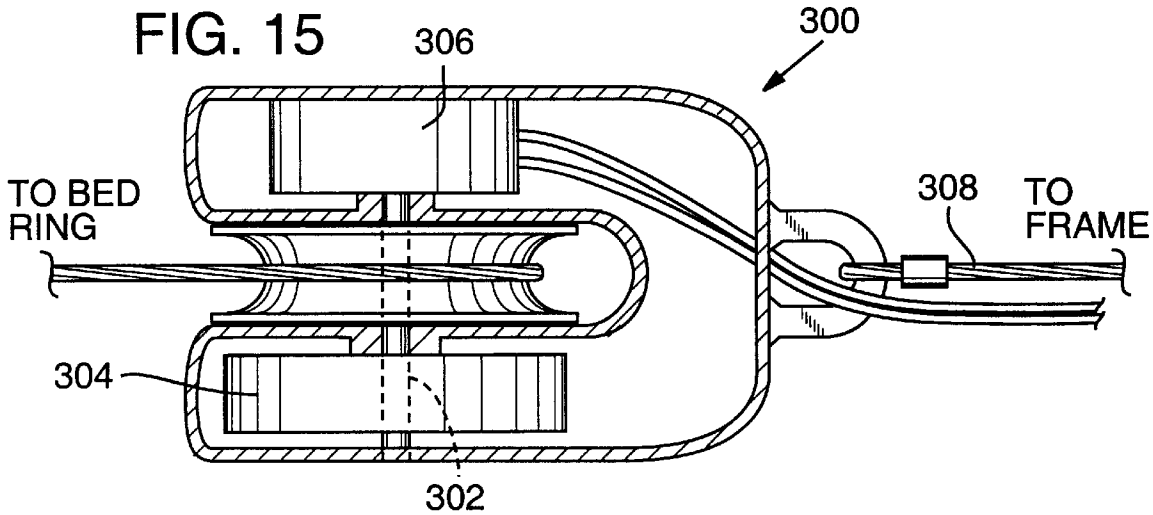

FIG. 11

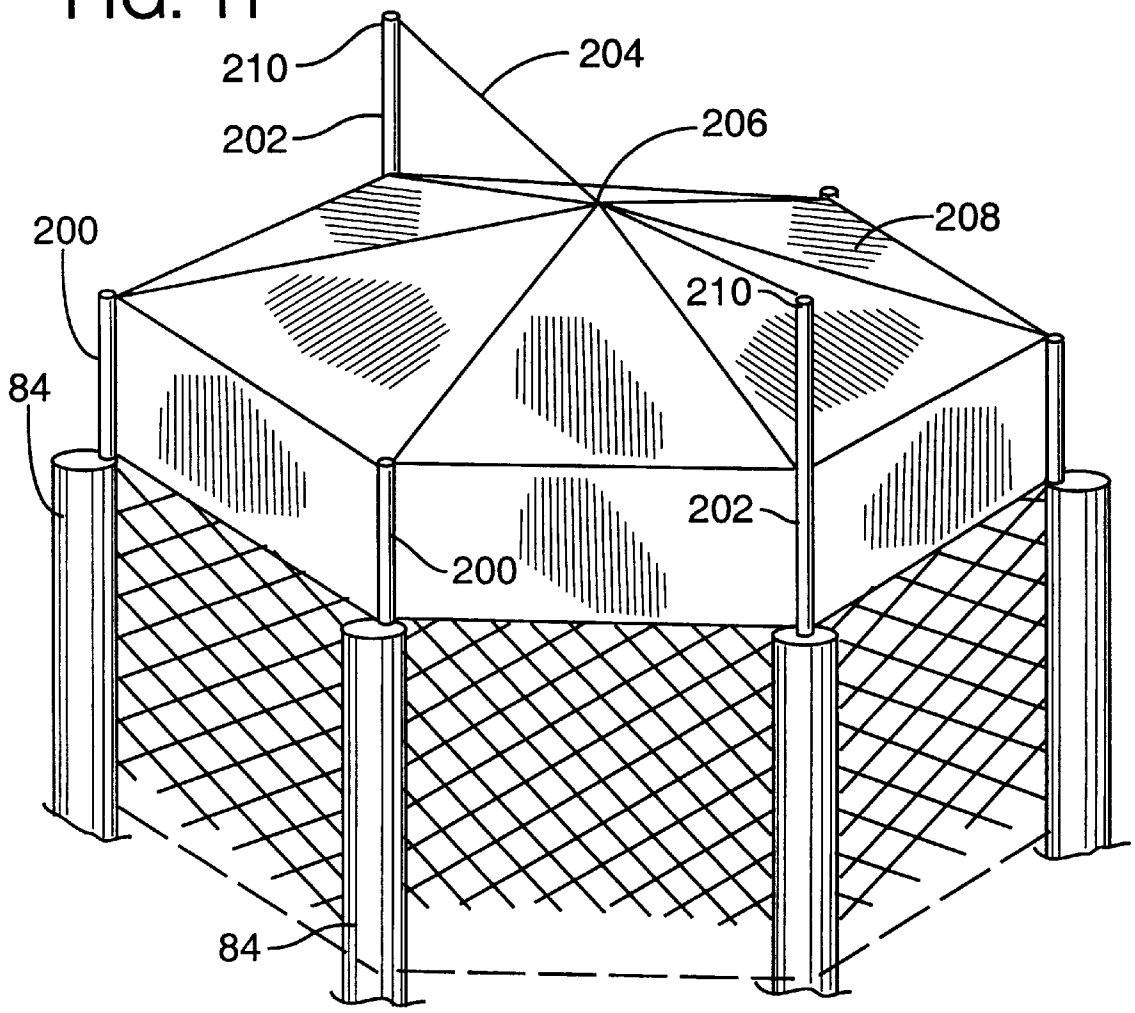

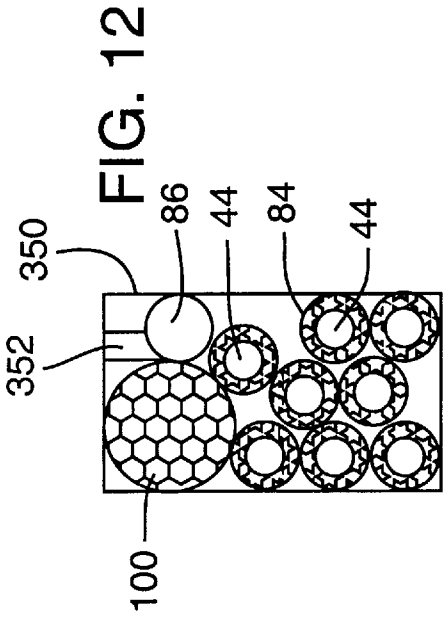

FIG. 12

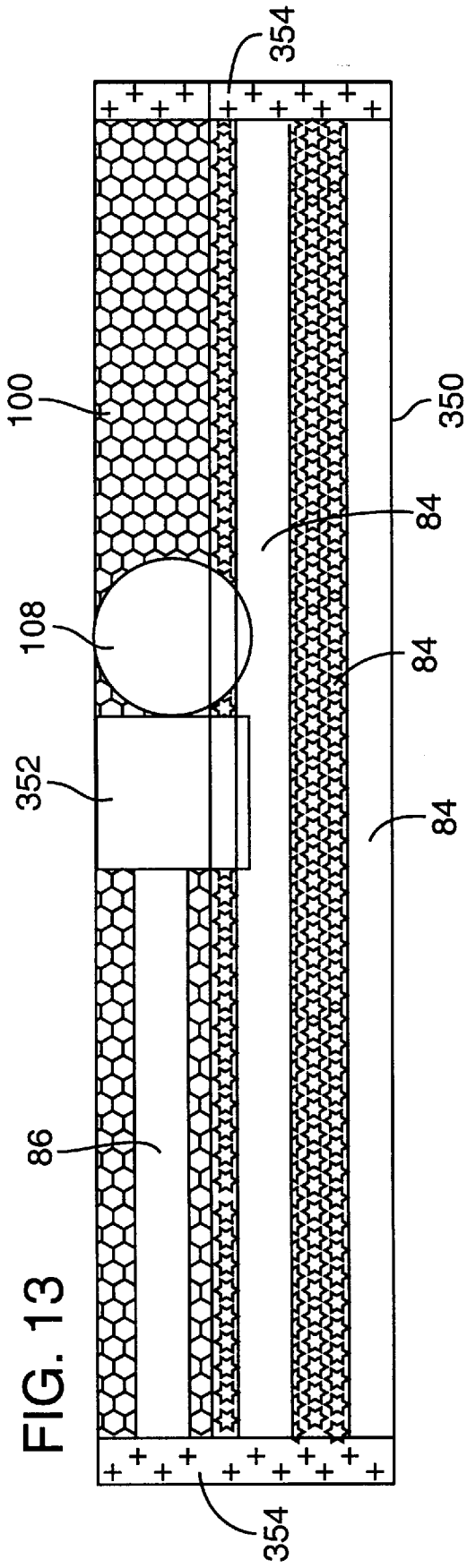

FIG. 13

TRAMPOLINE OR THE LIKE WITH ENCLOSURE

RELATED APPLICATION DATA

This application claims the benefit of U.S. Provisional Application Ser. No. 60/050,323, filed Jun. 20, 1997, U.S. Provisional Application Ser. No. 60/052,052, filed Jul. 9, 1997, and U.S. Provisional Application Ser. No. 60/087,835, filed Jun. 3, 1998. The provisional applications are incorporated herein by reference.

BACKGROUND AND SUMMARY OF THE INVENTION

The present invention concerns wall structures used with trampolines to protect trampoline users, and to provide new uses for trampolines. (The same principles can similarly be adapted to provide fencing around above-ground pools, thereby keeping pool toys within the pool, and providing structural support for recreational accessories.)

In the past, trampolines have been used for a variety of athletic and recreational purposes. However, injuries have sometimes resulted when a person jumping on a trampoline would land too near the boundary of the rebounding surface and strike the trampoline frame or fall from the trampoline to the ground. An article in the Mar. 3, 1998, New York Times reports that trampoline-related emergency room hospitalizations of children doubled between 1990 and 1995 (to nearly 60,000), and that the rate of injuries shows no sign of abating. Some in the medical community have called for a ban on the sale of home trampolines. While stopping short of a ban, the U.S. Consumer Products Safety Commission has called for safety improvements to home trampolines.

One approach to reducing such injuries has been to form a wall around the perimeter of a trampoline bed so that when a jumper lands too near the edge, the wall prevents the jumper from falling off. Examples are shown in U.S. Pat. Nos. 5,399,132 and 3,501,141. However, these devices suffer from various drawbacks, in some cases introducing their own safety concerns. For example, the '132 patent employs a rigid framework around the trampoline to support net fencing. If a jumper collides with one of the rigid uprights, the support frame provides little resilience and thus poses its own risk of injury.

In accordance with a preferred embodiment of the present invention, his and other drawbacks of the prior art are overcome, and new features are provided.

One novel aspect of the preferred embodiment is the provision of a safety fence support employing poles whose tops are linked by a resilient, rather than a rigid, member. Such an arrangement permits constrained movement of each pole, better absorbing impact to or near the pole. Moreover, the resilient linking of poles allows a neighborhood of plural poles (commonly all of the poles) to absorb energy from a jumper's impact anywhere against the safety fence. The subsequent release of this energy from the flexed poles helps propel the jumper back onto the trampoline surface. (A cushioning foam sheath can be provided around each of the uprights to enhance the foregoing effects.)

Another novel aspect of the preferred embodiment is the use of a controllable tensioning member on the member(s) linking the pole tops. One embodiment employs nylon webbing for the resilient linking member. A buckle joins two ends of the webbing and permits the webbing's length—and thus tension—to be varied. By varying this tension, the dynamic characteristics of the safety fence can be tailored as desired.

Another novel aspect of the preferred embodiment is the fastening of fence netting material to the support structure by continuous lengths of elastic cording. This arrangement is simple and inexpensive to implement, while enhancing the flexible response of the fence. In a particular embodiment, the elastic cording is threaded in and out of openings in fence netting. This embodiment further includes a flexible member (e.g. nylon webbing) helically wrapped around an adjacent upright support member to couple the cord thereto at plural intermediate points therealong.

Another novel aspect of the preferred embodiment is various game accessories that are used in conjunction with the trampoline and are mounted using some part of the safety fence for support.

The foregoing aspects, and others described below, are equally applicable to embodiments in which the safety fence is provided as an integral component of the trampoline, and also when it is provided as an add-on accessory. By providing the safety fence as an integral part of the trampoline structure, the cost, complexity, and weight of the combined structure can be reduced

Another novel aspect of the preferred embodiment is a mounting arrangement that permits a fence readily to be attached to trampolines of different designs.

Like fences for trampolines, fences for above-ground pools are also known, as illustrated by U.S. Pat. No. 4,623,126. But these, too, suffer from various drawbacks, including complexity, difficulty of installation, and expense. Embodiments of the present invention overcome these drawbacks as well.

The foregoing features and advantages will be more readily apparent from the following detailed description, which proceeds with reference to the accompanying drawings.

DESCRIPTION OF THE DRAWINGS

FIG. **1** is an oblique view showing a trampoline apparatus including an enclosure system according to one embodiment of the present invention.

FIG. **2** is top plan view of the apparatus shown in FIG. **1**.

FIG. **3** is an enlarged oblique view of a leg portion of the apparatus shown in FIG. **1**.

FIG. **4** is an enlarged partial oblique view of a wall portion of the apparatus shown in FIG. **1**.

FIG. **5** is an enlarged partial side view of the apparatus shown in FIG. **1**.

FIGS. **6** and **7** are enlarged views of an end cap used in the FIG. **1** embodiment.

FIG. **8** illustrates a door structure used in the FIG. **1** embodiment.

FIG. **9** shows cross-bracing that can be used in the FIG. **1** embodiment,

FIG. **10** shows one of several alternative arrangements for fastening upright fence support posts **44** to the trampoline frame **34**.

FIG. **11** shows one embodiment of a sun/rain covering that can be used with the embodiment of FIG. **1**.

FIGS. **12** and **13** show packing arrangements that can be used in connection with the FIG. **1** embodiment.

FIGS. **14** and **15** are views of an electronic sensor that can be used with the FIG. **1** embodiment.

DETAILED DESCRIPTION

Trampoline Fence

Trampolines come in a variety of configurations and sizes. A popular trampoline **20** is shown in FIGS. **1–2**. The illustrated trampoline has a circular frame. **34** supported by multiple U-shaped tubular legs **36**. The U-shaped legs have two vertically-extending sections **37** connected by a horizontal section that rests on the ground. The upper ends of the vertical leg sections **37** are secured to the frame **34** by welds. For ease in storage, it is convenient for the legs to be removable. This is made possible by providing a swage joint **38** in each vertical leg section **37**. (In some embodiments, the legs **36** are not removable but are fixedly secured to the frame **34**. In such embodiments, it is sometimes desirable to secure the legs to the ground, as by coupling to screw-in ground anchors. The coupling can be ineleastic or elastic.)

In the preferred embodiment, at least the top of frame **34** is covered with a resilient foam material to help cushion any impact against the frame. Many commercially available trampolines use 1.92" O.D. frame tubing. This can be covered by splitting 3.0" I.D. extruded foam tubing, and securing a split half on top of the frame by tape or the like.

A plurality of spring members **39** tautly attach a sheet of sturdy fabric **40** to the frame **34** so that the fabric provides a rebounding surface or bed.

Other types of trampolines, having variations in structure such as individual legs secured by bolts or the like, will equally benefit from the present invention.

The foregoing trampoline is augmented by an enclosure system **30** that provides a protective and interactive environment for a trampoline user. The illustrated system **30** includes a plurality of posts **44** which extend vertically. Each post **44** is secured to a vertical section **37** of one of the legs **36**. For the purpose of this disclosure, each post **44** is referred to as having an upper end portion **46**, a wall supported portion **48** located above the level of the rebounding surface **40**, a lower portion **50** located below the surface **40**, and a lower end portion **52** which extends to ground level. These designations refer to locations on a post **44**, not to separable sections. In the illustrated embodiment, each post **44** is made in two sections and connected at a swage joint **54**, with the two pieces secured together by a set screw. A single-piece post can also be used, or a post comprised of more than two pieces secured end-to-end with swage fittings and set screws can be used.

A post comprised of plural telescopically-fit poles can also be used. Telescopic fitting of poles facilitates adaptation of a single fence kit to differently sized trampolines (or pools). For example, 10 foot diameter trampolines are typically 20–24 inches high, whereas 14 foot diameter trampolines are typically 33–36 inches high. End user customization of the safety fence system is required, if a single model of fence is to be employed with both sizes of trampolines. A fixed length tube (whether of constant diameter, or tapered as by swage joints) requires the customer to cut off an end of the pole to adjust the height. A telescopic (slip fit) joint permits the customer to customize the pole height by simply by coupling the tubes (whether by a screw, bolt, compression straps, etc.) to achieve the desired length. Excess length is not discarded, but rather fortifies the overlap and the strength of the resulting structure.

Each post is connected to a leg by two leg fasteners **58**, **60**. As best seen in FIG. **3**, the upper fastener **58** is an assembly having two U-bolts **64**. The U-bolts have threaded ends **65**. In use, the U-bolts are positioned to encompass the frame **34** on opposite sides of the vertically extending portion **37** of a leg **36**. Two saddle clamps **66** are respectively positioned above and below the frame **34**. Each clamp **66** has two openings that respectively receive one threaded end **65** of each of the two U-bolts. Nuts **68** are tightened onto the threaded ends **65** of the U-bolts **64** in order to secure the post **44** to the frame **34**. A clamp cover cap can fit over the U-bolts to hide same.

To provide a degree of flexibility in the fasteners **58**, stiff compression springs (not shown) can be provided between the saddle clamps **66** and nuts **68**. In such an arrangement, locking nuts are used, and the nuts are not tightened to the extent that the springs are completely crushed. With such springs in place, a post **44** can move a short distance away from the frame **34** when a person bounces against the post from inside the trampoline court of chamber **106**, and the post is urged outwardly. The additional movement of the pole helps cushion the impact on the person, and helps store energy that is subsequently released to propel the person away from the fence/pole. A similar spring-coupling arrangement can be used at the lower clamp **60**, there arranged to permit the top of the pole to deflect inwardly (i.e. the bottoms of the pole deflects outwardly, away from the leg) when a remote part of the fence is impacted.

A rigid, smooth-surfaced cap (not shown) is provided on the outside of each upper fastener **58** to cover all the threaded ends **65** of the U-bolts These caps protect persons from coming into contact with the threaded ends **65** of the U-bolts **64**, which ends are somewhat sharp. Each cap has rounded corners and is secured in place over the ends **65** by a cable tie (not shown) which encompasses the cap and a diameter of the frame **34** and/or leg segment **37**. Other covering arrangements can of course be used.

The lower fastener **60** has a single U-bolt **74** with threaded ends **75**. A saddle clamp **76** is positioned over the threaded ends and held in place by nuts (not shown). For greatest stability, the lower fastener **60** should be near the bottom of the vertical section **37** of the leg **36** so that the lower fastener **60** is well below the upper fastener **58**. (Alternatively, fastener **60** can attach anywhere along the horizontal portion of legs **36**.) For safety, the lower fasteners should be positioned so that the threaded ends of the U-bolts **74** extend inwardly, toward the center of the trampoline bed **40**. The cantilevered mounting of poles **44** allows deflection of the tops to help absorb shock impact

It is particularly helpful for the fasteners **58**, **60** to be positioned so that any swage joints **38** are located between the upper and lower fasteners **58**, **60**. This arrangement prevents the swage fittings from coming apart unintentionally, as is possible during energetic use of a trampoline for game playing. It is also an advantage of this system that it reinforces the legs of the trampoline and reduces the stresses on the welds between the frame **34** and legs sections **37**.

The wall support portion **48** of each post **44** is covered with a layer of padding **84** made from a resilient foam material, with or without a fabric cover. The padding may be a rectangular sheet wrapped around the post **44** and secured by fasteners or may be tubular so that there is no seam. The illustrated foam is extruded closed cell polyethylene foam tubing, with a wall thickness of 0.625 inch. Other resilient, weather-resistant foam materials can also be used. As explained below, the foam material serves not only as cushioning for a person who impacts one of the posts **44**, but also serves as a part of a system for momentarily storing energy from remote impacts, so that the foam contributes to rebounding a person toward the center of the trampoline, even when the foam is not directly impacted by the person.

In the illustrated embodiment, an end cap **86** is provided as an upper extension of each post **44**. The end cap has a

rounded upper portion **88**, a centrally-located neck portion **90** defining a circumferential channel extending around the axis A of the post **44**, and a downwardly-opening collar or sleeve portion **91** which is located at the base of the cap and which is of greater inside and outside diameter than the neck portion **90**. The upper portion **88** is substantially spherical for strength. The neck portion **90** is hollow and shaped to snugly fit over the upper end portion **46** of a post **44**. The collar portion **91** can be of sufficient inside diameter to receive, protect, and aid in securing the top of the padding layer **84**. The cap **86** is made of a shatter-proof plastic material which is somewhat flexible at typical ambient temperatures so that the cap is capable of cushioning some impact energy.

A hook **92** is provided by an eye bolt having a passageway **93** giving access to the center of the eye. In the illustrated embodiment, the hook is located on the end cap **86**, but can be located elsewhere at or near the upper end portion **46** of the post **44**. The eye bolt has a shank that extends through two vertically-aligned, registered holes through the post **44** and cap **86** at one side of the post **44**. The threaded end of the shank is secured by a tee nut **94** which has a neck received in suitably-sized, registered holes through the post **44** and cap **86** at the opposite side of the post **44**. Other forms of hook can be used at this location, and a hook can be secured differently, for example by one or more clevis pins extending both through a portion of the hook and through the post. A closed eye could also be used, but this would be less convenient because certain lines are threaded through eyes during installation of a wall. The hook has several uses explained below.

A generally cylindrical wall **100** of a flexible material is suspended between the posts **44** to define a chamber **106** above the rebounding surface **40**. The illustrated chamber is open at the top as shown in FIG. **1** (although in other embodiments this may not be he case). The wall **100** has top and bottom edges **101**, **102** and is made of a light-weight plastic sheet material, such as extruded plastic safety fencing, having a unitary structure with numerous mesh-like openings **104**. Woven netting, strong fabric, or other forms of plastic mesh may also be used, preferably with the top and bottom edges **101**, **102** being reinforced by a hem or other finishing. Generally, the wall material will be a rectangular piece having a width which is the same as the height of the wall, and a length which is somewhat longer than the circumference of the enclosure. The openings should be no more than 2 inches across, in their largest dimensions, to prevent small children from getting their hands stuck in the openings and so that there is a sufficiently uniform surface against which balls of most any size can be thrown during game play. Preferably the openings are at least 1½ inches across and spaced sufficiently close that there is good visibility through the wall **100**. The fencing may take many forms; the most common have patterns of openings that are diamond-shaped or rectangular. The most preferred fabric for the wall **100** is an extruded monofilament polypropylene netting in which the nodes and strands are rounded/oval, with smooth transitions in order to reduce the chance of cuts/abrasions to the users (and to structures to which the fabric is secured). This fabric and the other nonmetal elements described herein are best made of materials that are both abrasion-resistant and are resistant to weathering, e.g. by exposure to UV light. Suitable materials generally include polypropylene, nylon, high density polyethylene, and Dacron polyester.

A support system is provided to hold the wall **100** in place. At the top, a flexible line **108** extends post-to-post near the top of the chamber **106**. Each pair of adjacent posts **44** is coupled by a reach of the line **108**. In the illustrated embodiment the line **108**, although flexible, is only somewhat elastic. The line **108** thus allows the tops of the poles to move relative to one another, but the tops of two adjacent poles can not move away from each other to any great extent. The line **108** is made of a sturdy, weather-resistant material such as 1" nylon webbing. Nylon webbing has little elasticity and thus will not sag after it is installed. Webbing is better than rope for line **108** since rope has a relatively low surface area which would tend to cut into and abrade the body of a person who bounced into contact with the line **108**. Webbing has a relatively high surface area and automatically rotates so that a flat face of the webbing contacts any impacting body. The flat webbing face distributes resistive force over a greater portion of a person's body and is relatively nonabrasive.

The illustrated top line **109** is a single continuous piece. The ends of the top line **108** are secured together by a buckle **110** so that the top line forms a continuous loop. This is a strong construction since the buckle **110** is the only fitting corrected to the line. Tension in the line **108** can be adjusted by using the buckle **110** to vary the circumference of the loop. The line **108** is mounted to chokingly surround the neck portion **90** of each end cap **86**. In one embodiment (FIG. **7**), this is accomplished by slipping a loop **116** of the line **108** through a metal ring **114**, and then lowering the loop **116** over the top **88** of the end cap **86** to a position where the loop **116** seats in the trough of the hook **92** and extends through the neck portion **90**. After the line **108** is thus installed on all the end caps and pulled to a desired tension, each ring **114** maintains its loop **116** at a small diameter so that the loop **116** can not slide up out of the neck portion **90**. The ring **114** is a welded steel chain link having inside dimensions of 1"×⅜" and having rounded edges to minimize wear of the line **108** and to protect trampoline users from injury.

The wall **100** is secured to the upper line **108** along portions thereof extending between the posts **44**. This can be accomplished in a variety of ways. When using mesh-like plastic safety fence having numerous openings **104**, it is most convenient to weave the upper line **108** through a series of openings **104** near the top edge **101** of the wall **100**. This arrangement is shown in FIG. **5** The weaving can skip a few openings **104** opposite each of the end caps **88** to reduce stresses at points where the top line **108** extends from the fencing to a post **44**.

A similar arrangement is used to secure the bottom edge **102** of the wall **100**. A strap of one inch polypropylene webbing **120** extends post-to-post at an elevation near that of the frame **34**. A reach of the webbing **120** thus extends between each pair of adjacent posts **44**. The webbing additionally can be secured to the frame **34** at intervals between the posts **44**, by cable ties (not shown) or other fasteners, to prevent the wall from stretching to a position outwardly of the frame **34**.

The ends of the webbing **120** are secured together by a buckle **121** so that the webbing **120** is a continuous loop Tension in the webbing **120** can be adjusted by using the buckle **121** to vary the circumference of the loop. With a wall of inelastic netting, the webbing **120** can be woven through a series of openings **104** near the bottom edge **102** of the wall material (If the webbing were fixedly attached, as by sewing or the like, the differences in elasticity between the plastic netting and the webbing would lead to premature failure of one component or the other. The illustrated free-weaving arrangement allows the two components to move

somewhat independently, yet conform to the forces that each places on the other during an impact.)

At each post **44**, a loop **122** of the webbing **120** extends out from the wall **100** and is held to the post **44** by a fastener **124** such as a cable tie, or by passing through a link of a short chain secured to one of the U-bolts **64**. The fastening should be arranged so that the loop **122** cannot move a substantial distance upwardly along the post **44**. A loop **122** should not extend from two immediately adjacent openings in fencing material, since this would stress the fabric near the post. Instead, some space should be allowed between the two points where the loop **122** extends from the wall **100**, so that tensioned webbing **120** does not cut into the wall **100** at those points. As an alternative, the bottom edge of the fencing **100** can be secured directly to the frame **34** by a series of cable ties (not shown), without use of webbing **120**. Connections between the fence **100** and the frame **34** can be threaded through openings pierced through perimeter padding **126**.

The just-described arrangement places the fence **100** beyond the extent of the rebounding surface. That is, the bottom diameter of the chamber **106** is larger than the diameter of the rebounding surface **40**. In an alternative arrangement, the fence is arranged to encompass a smaller area. In such an embodiment, the netting can be secured to the edge of the rebounding surface, as by weaving the webbing **120** through eyes or loops **123** along the margin of the rebounding surface (to which the springs **39** attach), or to the inner ends of springs. In some embodiments, the netting is not be affixed to the support posts **44** except at their tops. Instead, the netting extends down from the top line **108**, and is secured only to the periphery of the rebounding surface **40** In such embodiments, impacts to the netting are quickly transferred to the elastic rebounding surface.

Alternatively, instead of coupling the netting to the margin of the rebounding surface **40**, or to the inner ends of the springs **39**, it can be coupled to an inner portion of the annular pad **126** that is commonly used to cover the springs (e.g. to holes formed therein, optionally reinforced with grommets).

Instead of using webbing **120** as the coupling member at the bottom of the netting, cable ties, elastic cording, other webbing, etc., can alternatively be used. In still other arrangements, no discrete coupling member is employed, but the fencing is directly coupled to an element of the trampoline (e.g. springs **39** can be passed through openings **104** near the bottom margin of the fence.) In some such embodiments, the bottom margin of the netting may be positioned below the plane of the rebounding surface.

By arrangements such as the foregoing, the fence is constrained in size so as not to encompass any part of the frame within chamber **106**. Desirably, the fence does not extend much—if any—beyond the rebounding surface itself. In some such embodiments, the annular pad **126** can be omitted except in a gangway region, since the fence will prevent user impacts against the springs **39**.

Desirably, wall **100** is secured to each post **44** along its vertical length by an arrangement that includes one or more elastic components. As best seen in FIG. **5**, an elastic cord **128**—of the type sometimes referred to as a bungee cord or shock cord—is secured at each end so that it extends vertically along the wall support portion **48** of a post **44**. In the illustrated embodiment, cord **128** has loops at each end. The cord is wrapped once around the trampoline frame **34** near the post **44**, and one end of the cord is drawn through the loop at the other end, securing the cord to the frame. At the upper end, the loop of cord **128** is passed over the top of the end cap and rests in neck portion **90** and in the opening **92** of the eyebolt. (Various other terminal attachments for cord **128** can of course be provided.)

Between its ends, cord **128** extends in serpentine fashion through openings **104** in the wall material so that loops of the cord **128** are alternately provided on the inside and the outside of the wall **100**. Outside loops **130** of each cord extend towards the post **44**. Also extending along the wall support portion **48** of each post **44** is a helical wrap of webbing **134**. In the illustrated embodiment, this webbing is a length of one half inch polypropylene webbing fixedly secured at each end. At the Top end, webbing **134** is secured to the post (e.g. to eye bolt **92**). At the lower end, the webbing **134** can be attached to various fixtures, such as the post **44**, an eye-bolt therethrough, the frame **34**, the clamp **58**, the trampoline leg **37**, etc. Webbing **134** extends helically around the outside of the padding **84** and through loops **130** in the elastic cord **128** to hold the cord against the padding **84**. The strap **134** is wrapped sufficiently tightly to hold the cord **128** against the padding **84**, but not so tightly that the padding is substantially deformed. Elasticity of the loops **130** helps to prevent the wall fabric from ripping under impact loads.

Because the wall material **100** is longer than the circumference of the enclosure, ends portions **137**, **138** of the wall fabric overlap as shown in FIG. **8**. At the top, the end portions **137**, **138** are secured by weaving of the line **108** through openings **104** at the top edge of the end portions. A horizontal row of openings at the tops of the two end portions **13 7**, **138** are held with the openings in registry, and the line **108** is threaded through adjacent openings in the rows, in serpentine fashion, so that the top edges of the end portions **137**, **138** are in effect sewn together by the top line **108**. At the bottom, the outer end portion **138** is secured by weaving of the line **120** through openings **104** at the bottom edge of the end portion. The bottom of the inner end portion **137** is not secured. A piece of ½" nylon webbing **139** is woven in serpentine fashion downwardly from the top line **108** through both the end portions **137**, **138** to a location **140** between the top and bottom lines **108**, **120**. This webbing **139** thus sews upper regions of the end portions together. The nylon webbing continues down from the location **140** secured only to the inner end portion **137**. Thus the end portions **137**, **138** are not sewn together below the location **140**, thereby providing a flap door **141** which can be bent inwardly to permit access to the chamber **106**. A free extension **142** of the webbing **139** can extend from the bottom of the inner end portion **137** to be used for tying down the bottom of the door. In the illustrated embodiment, the extension is secured by wrapping it around the bottom line **120** at the base of the door and then tying it to a removed area of the bottom line **120**. Desirably, the overlap and securing arrangements are such that—even if left unsecured—the flap will not permit a jumper to fall off of the trampoline If

If desired, the flap door **141** can be secured by a locking device, such as padlock, holding the flap immovably to another part of the structure (which may be the overlapping netting), thereby impeding access to the trampoline surface. In one embodiment, an elongated metal cable with eyelets at the end (as is commonly used for locking bicycles) is threaded along the length of the open flap and is used in conjunction with a padlock, so the flap is secured at more than a single point.

The illustrated enclosure system has walls that are strong but highly resilient. As noted, the fabric of the wall **100** is extruded plastic safety fencing that is flexible, but only

somewhat elastic. In the illustrated embodiment, elasticity is provided by other elements. In particular, the cord **128** is elastic, the padding **84** is comprised of a plastic foam material which compressible and elastic, and the posts **44** are somewhat flexible. In other embodiments, the wall fabric itself can be elastic.

When a person jumps from the trampoline surface **40** and bits the wall **100** of the enclosure, the wall moves a short distance in the direction of the force applied by the user and thereby absorbs energy and cushions the shock. The tops of all the posts **44** in the illustrated embodiment—because they are linked together at the top by the top line **108**—flex toward the impacted portion of the wall panel. Cord loops **130** are stretched on those posts **44** that are near the region of impact. And, those loops **130** pull and tension the associated strapping **134** into the padding **84** so the padding compresses. These actions allow the fence **100** to flex and conform to the body of the person who impacted the fence. The conformance of the fence distributes the resistive force on the person's body to provide enhanced cushioning. Also, because of this arrangement of elements, a portion of the impact energy is stored in the flexed posts **44**, in the elongated cords **130**, in straps **108** and **120**, and in the padding **84**. (Impact energy may additionally be stored in the rebounding surface, if the netting is connected thereto.) This stored energy is promptly released as a reaction force that urges the impacted portion of the wall back towards the center of the chamber **106**, pushing the trampoline user with it.

In embodiments in which the bottom of the netting is attached to the periphery of the flexible rebounding surface **40**, the system can be conceptualized as an arrangement of upright long tubular springs attached to a diaphragm that helps disperse, absorb, and re-cycle impact forces directed at the poles and the net. The diaphragm also transfers these forces to the support system that maintains the diaphragm's elevation. The tubular springs (posts) can be loaded by tightening line **108**, pulling the tops of the tubular springs downwardly and inwardly. Such arrangement makes the system tighter/less flexible, so that impact forces from a focused strike point transfer more quickly to the entire system than would be the case if the top line were loosened. If the line is loosened, the tubular springs are unloaded and are provided more space to flex, thus delaying transfer time and making any impact with the net feel softer—an arrangement generally preferable for light individuals. Loading the tubular springs (posts) in this way works on the same principle as loading a bow for the purpose of shooting arrows. If the posts begin to fatigue over time, the top line **108** can be tightened to compensate for this increased flexibility (and the net adjusted or trimmed as necessary).

In order to provide the above-described spring effect, the posts **44** should not be rigid. The posts should be sufficiently strong that impacts by trampoline users will not permanently bend the poles. But, the posts **44** should be able to flex to some extent when a trampoline user impacts the wall **100**. For ease of construction and low cost, the illustrated posts **44** are made of tubular steel. Other materials, such as PVC, plastic, fiberglass, graphite, carbon fiber, Kevlar, etc., can be used if they have appropriate strength and flexibility characteristics. The particular material(s) can be selected to tailor the flexibility, elasticity, and strength of the resultant system as desired. One alternative embodiment employs a fiberglass second (upper) pole with a steel first (lower) pole. Another alternative embodiment employs a heavier gauge stronger steel first (lower) pole, in conjunction with a lighter, more elastic steep second (upper) pole.

In systems employing telescoping poles, varying the overlap between poles—as well as varying heights of the pole and/or overlap off the ground—allows the posts' flexibility to be tailored as desired. For example, enlarging the overlap region, or extending it further above the trampoline, stiffens and strengthen the system for heavier or taller individuals, whereas mounting the overlapping region below the trampoline frame adds flexibility for lighter individuals.

As most clearly seen in FIG. **9**, cross-bracing straps **144** can be provided to limit the movement of adjacent posts **44** toward or away from another. A preferred cross-bracing material is substantially inelastic nylon webbing; plastic or metal cable could also be used. The cross-bracing extends, in pairs of crossing reaches, from positions near the upper end portions **46** of two adjacent posts **44** to positions which are near the elevation of the frame **34**, so that an X-shaped pair of straps extend between each pair of adjacent posts **44**. The cross-bracing for a pair of adjacent posts **44** can be provided by a single length of strapping which extends in a partial figure is eight pattern among four rings including a top ring **148** and a bottom **149** on each post. The two ends of the strap **144** are secured by a buckle **152**.

It is possible to tune the flexibility of various elements of the enclosure system. This can be done in various ways. For example, tension springs, such as shock cord segments, can be added to (or wholly substituted for) the line **108**, the strap **120**, the strapping **134**, and/or the cross bracing **144**. The addition of a short section of flexible cord imparts a small amount of elasticity to such members. For greatest adjustability, such a member can be constructed from a series of short runs of inelastic webbing, instead of from one continuous run. Tuning can also be accomplished by changing the width of the helically wrapping strap **134** that passes shock to the padding **84** on posts **44**, and by changing the diameter of the elastic cord **128**. The netting configuration (e.g. diamond versus square openings) also affects the rebound characteristics, as does the choice of net material (e.g. nylon netting is relatively more elastic than plastic). As noted earlier, choices associated with fence support posts **44** also provide many opportunities to tune the fence's rebounding characteristics.

In the preferred embodiment, the fence serves as more than a passive safety restraint, but rather forms another rebounding surface. That is, the fence serves to store, and subsequently return, a substantial percentage of any impact energy, thereby propelling a jumper back onto the horizontal trampoline surface. Although there are no standardized metrics in the industry, one useful measurement is the percentage of energy returned to a substantially inelastic 100 pound object that horizontally impacts the fence netting at a location midway between the upright support poles, and midway up the height of the fence ("horizontal rebound factor"). Desirably, the horizontal rebound factor is at least 10%. By suitable selection of netting and support materials, and tensioning of the adjustable members, significantly higher horizontal rebound factors can be achieved, such as 20%, 30%, or 40%, or more.

(It will be recognized that the illustrated fence responds to such mid-span horizontal impacts in a manner different than prior art safety fences. In particular, the tops of the posts flex downwardly towards each other and towards the area of impact (just like loading a bow for shooting arrows, as noted earlier). This effect makes it possible for the fence system to conserve more of the impact force energy in the posts, enabling the system more efficiently to recycle this energy back into the impacting body for the purpose of returning it to the trampoline surface. Top line **108** serves as the primary

mechanism for transferring such loads between the posts. The freedom of motion afforded by line **108** enables the net to more completely conform to the surface of an impacting body, distributing the forces of impact over a larger surface area on the body, thereby reducing the likelihood of injury.)

While the foregoing embodiment employs a post **44** extending upwardly from each trampoline leg **37**, this need not be the case. In one alternative embodiment posts **44** extend up above every other trampoline leg. Thus, the number of posts **44**, and where they are mounted, will depend on the size of the trampoline and the number of its legs, and the preferences of the trampoline owner. But, using the same basic set of parts, an enclosure kit can be assembled for trampolines of almost every size and shape.

The foregoing discussion contemplates that the safety fence is provided as a retrofit accessory for a trampoline (or pool), and includes hardware for securing the fence and trampoline together. Naturally, the fence can alternatively be included as an integral part of the trampoline assembly. Such an arrangement has certain advantages, including reduced cost and complexity. For example, the twin tubes **50**, **37** extending to the ground (FIG. **3**) can be replaced by a single leg, and the coupling hardware used to couple the tubes together can be replaced with other (typically simpler) hardware—or dispensed with entirely.

In one such embodiment, the legs that position the rebounding 'surface above the ground also extend above the trampoline surface to provide support for the safety fence components. In another embodiment, arched fence supports extend up from between adjoining trampoline legs, and are linked to the other arched fence supports. (Due to shipping concerns, all such elongated structures are typically provided in several parts and assembled in the field by the customer.)

As will be recognized by the artisan, numerous modifications and additions (and deletions) can readily be made to the above-detailed embodiments while is maintaining the same general structures.

For example, there are many alternative methods for securing the top line **108** to the posts **44**. One is to wrap the line **108** once completely around the next **90** of the end cap **86**, so as to slidably engage the line with the post without use of a ring **114**.

The attachment of the wall to the posts can be different. Although not preferred, the wall fabric can be attached to the posts with cable ties. Or the wall can be secured directly to the support with a helical wrap (e.g. elastic bungee cord or inelastic nylon webbing), without an intermediate cord (e.g. bungee cord **128**). In still other embodiments, the fence can be sewn to provide tubular vertical pockets into, which the posts **44** are simply received. The vertical pockets can be formed a distance away from the cylindrical wall, with the intervening space reinforced by vertical nylon webbing.

In still other embodiments, the net can be positioned outside the posts **44**, rather than inside. The helical webbing **134** and bungee cord **128** can be omitted in such embodiments, with less effect than in the earlier-detailed embodiment. An impact to the fence at one spot tensions the fence around its entire circumference, compressing the foam padding **84** on all the posts.

Still fisher, the net can be suspended inside one pole and outside the adjacent poles, or in other in/out configurations, depending on the particularly impact absorption requirements desired.

Suitable wall-support posts can be mounted so that they extend upwardly from a trampoline frame, and do not extend to the ground. A bracket for this purpose is shown in FIG. **10**. With this system, a trampoline support leg is received in the downwardly-facing opening **160**, the trampoline frame is received in the horizontally-facing openings **162**, **164**, and the wall support post is received in the upwardly-facing opening **166**. The bracket can be designed to receive free ends of four separate tubing members as illustrated. Or, a passage way can be provided through the bracket, horizontally and/or vertically, so that the bracket can be secured at a location between the free ends of a tube. For example, if the bracket has a vertical passageway, a single tube can extend through the passageway and, if the tube is sufficiently long, be used for both the trampoline leg and the wall support post (e.g. in an integrated trampoline/fence arrangement). Likewise, if there is a horizontal passageway, the bracket can be secured to a frame segment at a location between the ends of the segment. The bracket shown in FIG. **10** is made of two sheet metal members that bolt together to sandwich tube members therebetween. Other suitable brackets are metal cross connectors of the type used in plumbing joints. Myriad other such variations will be apparent to the artisan,

In still other embodiments, the fence poles can be coupled to the frame or leg of the trampoline by one or more lengths of elastic cording, e.g. with a "FIG. **8**" wrap (particularly suited for coupling a pole to the frame). A loop in one end of the cord, and a ball at the other, can be engaged to secure the cord in place. Stout rubber "O" rings can alternatively be employed. Non-elastic cable or zip ties, or hose clamps, can be provided as coupling elements, with elasticity provided (if desired) by cushioning inserts (e.g. resilient foam or rubber) inserted between the cable ties and the associated pole/frame/leg.

In yet other embodiments, a post can be coupled to the frame of the trampoline by an elongated metal or plastic member having an opening at each end sized to receive the post. The member is bent around the trampoline frame so the two openings are in alignment, and the post is passed therethrough. Slippage of the member (and thus the frame) down the post can be prevented by various securing arrangements, including a bolt, a swage joint to a larger tube, etc.

In still other embodiments, the post can be passed through two eye bolts, one positioned above, and one below, the trampoline frame. On the inside of the frame, the threaded ends of the eye bolts can pass through a rigid (e.g. metal) or resilient clamp saddle, and be secured by nuts.

In yet other embodiments, it is possible to position the posts **44** inside the frame **34** of the trampoline using variants of the above-described arrangements.

In some embodiments, it may be impossible or undesirable to connect the fence support posts to the trampoline legs. In such embodiments, the posts can be secured in place by the ground (as in a hole), or in a can or the like mounted to the ground and sized to receive the post. (The can or hole may be positioned as necessary to achieve an inclined support post, if desired.) Excess space in the cat/hole may be filled by various media, either resilient (e.g. rubber), fixed (e.g. concrete), or intermediate materials (e.g. rock, sand). Such arrangements permit myriad variations in pole placement and orientation.

The protective caps **86** on the ends of the fence poles can have various forms. For example, a domed cap can be used, manufactured of a somewhat soft material to dampen impacts, while still providing protection from the top end of the support pole. The cap can be filled with foam or caulk for increased shock absorbency. The cap can also be provided with an accordion-type wall configuration, to enhance its

shock absorbing ability. The size of the cap can be increased, to enlarge the surface area that an impacting body hits, and the cap can be bent (typically outwardly) to provide more ready deformability. Combinations of the above-described end caps are similarly advantageous.

The top strap **108** can be attached to the fence post tops by arrangements different than that described above. For example, two vertically-spaced bolts (or a U-bolt) can be used at the top of each pole to position a plastic or metal keeper strip, mounted on stand-off bushings. The strap can freely slide under the spaced-apart strip. (Or, the stand-off bushings can be eliminated, and the bolts can be tightened to pinch the strap under the strip, holding it fixedly in place.) Similarly, a bracket can fit, or be bolted, onto the top of a pole and define one or more slits through which the strap can be passed. Various cam arrangements can be used to permit the strap to slide through a slitted fixture on the top of each post, until a cammed lever is pressed down, locking the strap in place.

Games

Various new games have been developed to make use of the features of the enclosure system of the present invention. These games in some instances employ accessories to the basic enclosure system, as described below.

Tramp Chase. Players start in diagonal quadrants. At least two elastic cords are stretched across a court, and hoops or other obstacles may be attached to them. (Cords—although generally utilitarian—are herein considered to be game accessories.) Someone says go, and the players race around in the same direction, either over or under each of the cords, as the players have determined. A player wins by catching to and tagging the opponent.

Tramp Ball. Players are on either side of the net stretched across the court. The net is placed higher for more challenge. The ball is soft Nerf-type about the same size as a soccer ball. Players throw or hit the ball over the net. If an opponent misses the ball and hits the back-most panel of the court, a point is scored. The opponent has one bounce of his ball on the trampoline or less to catch ball and throw or hit it back to the other side.

Tramp Shot. Two bungee cords are stretched across the court, one high and one low, and suspend a target. The target consists of three disks that may rotate. A small, soft, bouncy Nerf-type ball about 4 inches minimum is used. Players may move anywhere in the court. A player serves by hitting the ball at the target. If it misses, the opponent gets a point and the serve.

Tramp Back. Players start anywhere in the court. The target is a large (3' diameter) plastic disk mounted securely against one pole. The ball is small, soft, and bouncy but lightweight, pneumatic-type plastic ball, about 4 inches in diameter. Players may move around in the court. One player serves by hitting or throwing the ball against the target. The opponent has one bounce of the ball against the trampoline to catch the ball, and may only take one step before throwing the ball back at the target.

Tramp Scotch. Many cords are crisscrossed across the court at the same or varying heights. Players must jump over one square to another in a player-determined sequence. For more challenge, players may not touch any of the cords when making the jumps.

Tramp Pass. Two circular targets (3' in diameter) are securely attached to opposing poles in the court. Each is covered with the hook side of Velcro fastening material. A small, soft, medium-weight ball is covered with Velcro loop fastener. A cord along the surface of the tramp separates the two players. Players throw the ball at the opponent's target. The opponent tries to block or catch the ball. A point is scored if the ball sticks-to the target. Once the opponent has the ball, he can throw the ball at the other target. For more challenge use more balls.

Tramp Tag. Three to eight balls of varying or equal size and bounciness are used. Players bounce about the court in any direction. They stan with 10 balls losing one each time a ball touches them. The last player left with a ball wins. Once a player is out he leaves the court. For more challenges use elastic cords stretched across the court obstacles.

Tramp Basket. A cord is stretched across the court at below waist height. A small basket with a net is securely attached to a support pole. A soft, bouncy Nerf-type ball that can easily pass through the net is used. Players either take turns a predetermined number of times and the one with the most baskets wins or a halfcourt game can be played. In the half-court game, the player on offense shoots behind the cord. The player on defense may not goal tend. In some embodiments, the rim of the basketball basket is spring-loaded, permitting it to defect if hit.

In some embodiments, a traditional basketball hoop/backboard assembly can be mounted between the tops of two adjacent posts **44**. However, rigid coupling of adjoining posts reduces the advantageous effects associated with independent mobility of aft the posts **44**.

Tether Tramp I. A ball is suspended from above the court by a bungee cord. A cord also extends from the top cord down to a cord across the bottom The ball is a medium-sized, bouncy, light-weight, plastic ball. Each player is in one-half of the court as marked by the lower cord, and remains there the entire game. A player wins by hitting the ball until it wraps tightly and completely around the vertical cord suspended in the center of the court.

Tramp Duel. Two nets are securely attached to poles located across from one another. One cord runs across the court at below waist-height, dividing the court into two halves, with the nets at the back of each. The ball is medium-sized and soft. Each player remains in his half during the entire game. Points are scored when a player makes a basket. The defender may block a shot, but may not goal-tend.

High Tramp. A cord is stretched across the net, starting out at waist height Just like the High Jump, each player attempts to jump over the cord from one side to the other, without touching the cord. Each player gets three attempts to jump each height. If both succeed, the cord is raised. The player to make the greatest height wins.

Tether Tramp II. Similarly to Tether Tramp I, the ball is attached to a cord which is suspended from an overhead cord. The object is to throw the ball around the horizontal cord. Each player tries to wrap up the ball in opposite directions.

Tramp Touch. A cord is stretched across the court. From it, balls are hung at graduated heights. This allows small children the challenge of jumping up and hitting them at progressively greater heights. They can see if they really did touch or not because the ball will be swinging. (For younger children, the balls can be marked with ABCs, numbers, animal shapes, words, etc.)

Tramp Throw. Cords are stretched in a grid across the top of the court. The game is played by jumping up through a certain square and throwing the ball down through another specific square.

Tramp Slide. Each player attempts to slide one of two soft "buoys" across to the other side of the net. If it hits the other side without the opponent blocking it, the player scores a point. For additional challenge, a cord separating the two

buoys for both players can be added. This requires the players to jump over the cord to get between the two buoys.

Tramp Hook. Each player has a different colored set of "hooks." A grid at the top of the court is divided into different sections, and they score by putting their hooks in their color-coded spot for each section. Each player is in a separate section, and they rotate when one completes his section.

Tramp Jump. An ordinary garden hose is attached to a water-pressure driven motor suspended in the center of the court. Attached to the motor is a soft rubber foam rod with a soft weight at one end. The motor turns the foam rod around the court, and the exiting water splashes around the court. Players avoid the foam rod by jumping or ducking. Its height may be varied.

WaterPlay. A garden hose is routed up a post **44**, and secured near the top. One or more loose lengths of hose extend from the secured hose termination out over the rebounding surface, These lengths flap around under water pressure, spraying the rebounding surface in an unpredictable manner. Players run and jump to avoid being sprayed By changing the length of the loose hose lengths, the randomness of the spray can be tailored. (In other embodiments rather than dousing the players from above, a hose can be positioned beneath the plane of the rebounding surface, and can wet players from below.)

Castle Siege. One or more buckets of water are mounted to posts **44** around the court. The buckets are mounted in a manner permitting them to be capsized, to spill their contents (e.g. the bucket can include two holes on opposite sides of its upper wall, through which the bucket is pivotally suspended, as by a Y-bracket). A player in the trampoline court tries to spill the water on attackers outside the trampoline court (either by directly tipping the bucket, or by pulling on a tipping rope secured to one side of the bucket). The attackers try to knock flags off the support poles (attached by hook/loop fasteners, such as Velcro) by throwing beanbags, balls, or the like. Some beanbags fall inside the court, and are out of play. Others fall outside the court, requiring a close approach by an attacker (within range of a water bucket) if the beanbag is to be recovered and thrown again. The player inside the trampoline wins if all of the beanbags are captured from the attackers. Any attacker who is doused with water is out of play. The attackers win if all flags are knocked down.

TrampScreen. A vertical screen of flexible material is connected to opposing posts **44**, or opposite sides of the fence **100**, dividing the court into two halves. (The screen can be of various materials including netting, fabric, clear plastic, opaque plastic, etc.) The screen has one or more openings defined therein. Various games can be played involving the passing of one or more balls or other objects from one half of the court to the other.

Speed Ball. Two players have two different colored sets of balls, and a matching colored baskets They race to grab balls of Their color (only one may be carried at a time) out of the center basket and put it into their own. Variations can be played with no center basket, or with players stealing or blocking each other's balls.

Jam Ball (one or two players). The enclosure is equipped with two opposed basketball goals. A center line is provided on the trampoline surface at a distance half way between the goals. A lightweight pneumatic ball is used. Each player defends one goal and shoots for the other. A player with the ball may dribble as in basketball. To shoot, a player must bounce the ball off the trampoline surface, jump up and catch the bounced ball in midair, and then shoot the ball at the goal before either the player or the ball lands on the surface. To score a point, the player must start the jump from the side of the centerline that is opposite the target goal. For a higher scoring game, it can be established that a player gets an additional bounce, before shooting, after gaining possession of the ball. Goal tending is not permitted. Rebounding determines control of the ball as in basketball.

Hip Hoop. Each player wears one or more hoops (e.g. extending from a belt) and tries to bounce one or more loose balls up from the rebounding surface and through the hoop.

PostGames. A rigid post can be secured in the center of the chamber, secured at its top to a strap of nylon webbing extended between opposed posts **44**. At its bottom the post can be secured to nylon webbing or an elastic cord that extends across the rebounding surface (either on, or spaced above, the surface). The post itself (typically plastic) is desirably covered with foam padding (e.g. extruded foam). Various games can make use of such a structure, e.g. tetherball.

The accessories used in the foregoing can be attached to the fencing or support posts by any known fastener. Desirably, the fasteners are removable (e.g. hooks or Velcro hook/loop fastener), permitting ready removal of the accessories. To reduce risk of injury, it is also desirable that cords stretched across the chamber **106** be elastic, and sufficiently elastic that they can stretch down to the rebounding surface (and below, down to the point of the rebounding surface's maximum deflection) when loaded by a predetermined weight (e.g. the weight of a lightest contemplated user—typically 30–60 pounds).

Many of the foregoing games can likewise be played in a pool, with the associated structures coupled to fence structure around the pool.

It will be recognized that the foregoing games, and the structures associated therewith, are not limited to the particular safety fence of the detailed embodiment, but are equally applicable for use with other trairtnpoline or pool enclosures.

Tent/Awning

It is often desirable to provide a cover or awning over the rebounding surface, e.g.; to protect the surface from sun or rain. The above-described embodiments are well adapted,to support various such covers.

FIG. **11** shows one such embodiment. Short extension poles **200** (e.g. three feet in length) are mounted to the tops of all posts **44** save two. From these two posts extend longer poles **202** (e.g. five feet). These poles can be any of the pole materials noted above, but are typically lighter weight than posts **44**. A line **204** (elastic or inelastic) extends between top points **210** of the longer poles, and serves to support an apex **206** of a domed covering **208**. The illustrated covering **20S** is a waterproofed nylon but other materials (e.g. canvas, plastic, etc.) can of course be used. Inside the covering, attachment points can be provided to suspend game accessories. Only the attachment point at the apex, however, is capable of suspending much weight.

Cable ties, web loops; elastic cord, or other fasteners can couple the covering **208** to the tops of the short extension poles **200**, and to intermediate portions of the longer poles **202**. Desirably, the cover **208** is not so taut as to significantly interfere withal the advantageous independent mobility of the poles **44**. The cover **208** is preferably disposed well above the rebounding surface so it does not restrict or interfere with use of the trampoline.

If desired, side walls can extend down from the covering **208**—either inside or outside the netting material—to provide additional sun- or rair-protection, or privacy.

The FIG. **11** embodiment can be positioned lower in the chamber **106** by securing line **204** and fabric **208** to lower positions on the posts **44**. So doing forms a recreational tent. In such embodiments, mesh windows with zippered rain flap fabric closures are desirably provided in the covering, so the occupants can see out. A doorway is similarly provided, and can be secured by a zipper or Velcro fastener. The line **204** in such embodiment should be elastic, and should be stretchable down to the level of the rebounding surface in order to reduce the possibility of injury.

In a particular hexagonal (or octagonal) "Big Top" tent embodiment, the peripheral margin of the fabric **208** is not attached directly to the posts **44**, but is rather coupled to the posts by lengths of elastic cord. Side walls extend down from the peripheral fabric margin and are secured at their bottom edges to the frame **34** (or to the edge of the rebounding surface **40**, to the inner periphery of the mat **126**, etc.) by short elastic cords. These side walls can be vertical, but in the preferred embodiment slope slightly outwardly as they extend downwardly.

In another embodiment, only the longer poles **202** are used, and line **204** defines a ridgeline over which a rectangular covering fabric is suspended, forming an A-frame-like shelter. The corners of the fabric are secured to the ground by lines extending out beyond the trampoline. By this arrangement, the independent mobility of most of the support posts **44** is not compromised, and the cover can extend over a larger area (e.g. protecting trampoline users from oblique sun and rain).

(Again, the foregoing embodiment can be constructed within the chamber **106** rather than above it. The lines from the corners of the fabric can be elastic and extend to points around the periphery of the fence.)

In yet another embodiment, an arched framework is formed by curved tubes (PVC, aluminum, fiberglass, etc.), each coupling the tops of opposing pairs of posts **44**. A fabric covering is then disposed over the framework. (A variant embodiment has an extension tube from each support post **44** terminating at a common apex, and there mating with a multi-input spider fitting. Such an arrangement, however, tends to interfere more with the independent mobility of the support posts **44** than the other embodiments. However, it provides a stronger attachment structure for suspended game accessories.)

Electronic Accessories

In certain embodiments of the invention, a trampoline court can be provided with at least one electronic device physically coupled to a component of the court, and electrically coupled to an associated electronic apparatus. The component can be a sensor that produces an electrical signal corresponding to a sensed physical parameter. Many such sensors are known, and include position sensors, strain sensors, accelerometers, proximity sensors, etc. Many of these (but not all) include piezo-electric elements for converting physical stresses into electrical signals. Others include potentiometers and other variable resistance devices whose resistance changes with a movable element. Such sensors are well known in the physical test and measurement art, so are not belabored here. Such sensors can be mechanically coupled to the rebounding surface, to the elastic members coupling the rebounding surface to the trampoline frame, to any element of the safety fence, etc.

FIGS. **14** and **15** show a sensor that can be hooked between the horizontal frame of the trampoline and the rebounding surface to produce deflection data, The sensor is integrated on a pulley **300**, the axle **302** of which is spring biased. When a jumper lands on the rebounding surface, the surface deflects and pulls the axle of the pulley against the force of the spring **304**. Movement of this axle causes the tap of a potentiometer **306** to move, changing the resistance across two terminals output from the sensor and coupled to an associated electrical apparatus by a cable **308**.

Data from such sensors can be used for various purposes. These include measuring time intervals between actions (e.g. between rebounds), numbers of actions, deflections of the rebounding surface or of an element of the safety fence, positions of impacts on the rebounding surface, force of impact, etc. This data, in turn, can be processed by an associated CPU-based device to calculate fisher information, such as calories expended, histograms of usage, etc. The CPU-based device, in turn, can include an LCD or other visual display for outputting raw and processed data to the user. A simple embodiment simply tallies bounces on the trampoline. Two counts can be maintained—a lifetime count; and a session count. The latter can be reset with a reset button (much like a car's odometer and trip odometer).

The sensor can be used as input for more than simply display devices. Other embodiments produce sounds in response to each bounce. The sounds can be amplified and played through speakers, either mounted to the poles or near the bottoms of the support legs. If the trampoline system is equipped with one or more speakers, it is desirable to provide an input to which a radio, CD player, or the like can be connected, so that it can play through the system's speakers.

The electrical device need not be a sensor. For example, it can include a momentarily operable switch. It may comprise a keypad. Such a switch or keypad can be used in conjunction with an associated electronic apparatus to keep a game score, or to maintain a log of exercise activity. (Such an electronic apparatus may be simple enough not to require a CPU. For example, it may comprise simple counting circuitry with associated display driver circuitry.)

Above-Ground Pools

As indicated earlier, the same fencing concepts detailed above can be employed with above-ground pools, For example, the upright support poles can be secured to first and second straps positioned around top and bottom edges, respectively, of an above-ground pool. These straps may be robust nylon or polypropylene straps, metal straps, etc. A third strap (e.g. one inch nylon) can link the top of the poles (e.g. six feet above the top edge of the pool). Fence structures like those detailed above can be supported from the vertical poles. Such a fence can serve diverse purposes, including preventing balls and other pool toys from leaving the pool area, and serving as a mounting structure for game related accessories, as described above. The fence can also be used to impede access to the pool by use of a padlock or the like However, as noted, such arrangements are not foolproof Accordingly they should not be relied upon to prevent unauthorized pool use (and possible accidental drowning).

As used herein (including in the concluding claims, unless other elements of a claim preclude such a construction), the term "trampoline" should be read to encompass above-ground pools, and the term "rebounding surface" should similarly be read to correspond to the top water surface of the pool.

Landscaping

A trampoline safety fence can be used as a trellis for growing different plants, particularly vines (e.g. ivy). Trellising plants on the fence serves many purposes, including helping to hide the trampoline and making it better blend into the landscape, shading the court and trampoline

(increasing user comfort and protecting the trampoline system components from UV damage), providing a wind break, and providing privacy to trampoline users.

Packaging

Prior art packaging includes certain drawbacks addressed by embodiments of the present invention.

The poles forming the above-detailed support structures are relatively long. If they ale single piece, the shipping package is necessarily quite large—perhaps eight feet long. If the poles are multiple-piece, the package girth is increased, to accommodate the plural pieces needed for each support framework. Costs of shipping are related to carton size, making both options relatively disadvantageous.

In the presently-preferred shipping technique, such drawbacks are overcome and additional advantages are provided. The support poles of the preferred embodiment are formed of plural nesting poles. For example, a first (lower) pole is two or three feet long, and has an outer diameter of 1.75 inches. A second (upper) pole is six feet long, and has an outer diameter of 1.5 inches. (Both are 16 gauge.) For shipping, the first pole is coaxially positioned over the second pole, resulting in a net length of just six feet. Moreover, the first pole has a dimple on its end (an artifact of the tube cutting process) that reduces its inside diameter to less than the 1.5 inch outer diameter of the second pole. This prevents the first pole from sliding along the second. instead, it is constrained to a position at the end of the second pole. This arrested movement overcomes a drawback in some other nested-tube arrangements, in which sliding of shorter tubes is possible, with the possible consequence of inertial damage to the shipping carton (e.g. blowing out an end of the carton).

This nested pole arrangement is desirably slid into a surrounding foam tube, having an opening of about 1.75 inches in diameter. This further constrains any movement of the first pole (due to the close fit within the foam tube). It also protects painted finishes on the poles. The foam tube helps fill air space in the carton, improving the carton's crush-resistance (e.g. when stacked). The foam also protects other contents of the carton (e.g. an instructional videotape) from damage due to encounters with the poles. (The videotape instructs the user in assembly of the safety fence, thereby saving telephone support costs.)

FIGS. **12** and **13** show the packing arrangement of an illustrative shipping carton **350**, depicting plural nested poles **44**, foam tubes **84**, fence netting **100**, webbing **108**, caps **86**, video **352**, Styrofoam inserts **354**, etc.

The end caps **86** can also be nested. That is, the sleeve portion **91** of one end cap can have an opening large enough to receive the rounded top portion **88** of another end cap. All of the end caps can be serially nested in this fashion.

Packaging arrangements similar to those described above can advantageously be employed for shipment of tubes for other recreational equipment, such as outdoor play structures (swingsets, etc.).

Concluding Remarks

The disclosures of the patents cited herein are incorporated by reference.

From the foregoing disclosure, it will be recognized that the preferred embodiments of the above-detailed enclosure overcomes several drawbacks of the prior art, and provides numerous features not heretofore available.

It will be fuither recognized that the invention can be practiced in many diverse forms, some quite different from those particularly described above. Many embodiments will not employ the detailed structures, and/or will not overcome the same drawbacks of the prior art, and/or will not provide the same advantages. Some embodiments of the invention may employ structural elements expressly avoided in the preferred embodiment (e.g. fence supports that are rigidly coupled together at their tops), but nonetheless employ other of the novel features disclosed above to provide an advantageous arrangement.

Of course, the principles disclosed above are similarly applicable to trampoline (and pool) shapes other than the round shape illustrated (e.g. rectangular).

Regarding alternative structures, we mean to teach by this disclosure that other structures—reasonably recognized by those of skill in the art to be interchangeable with those disclosed—can alternatively be employed. Thus, there should be no need to particularly detail, e.g., that inclined or arched supports can generally be substituted for vertical supports; that springs can be substituted for elastic cords; that tumbuckles and the like can be substituted for slidable buckles, etc., etc.

In view of the many embodiments in which the principles detailed above can be employed, it should be recognized that the disclosed embodiments are illustrative only and should not be taken as limiting the scope of the invention. Rather, we claim as our invention all such embodiments as may fall within the scope of the following claims, and equivalents thereto.

We claim:

1. A trampoline having a safety enclosure therearound, comprising:

a frame;

a rebounding mat coupled to the frame by plural spring members;

plural independent poles, each extending above the rebounding mat;

the safety enclosure comprising a flexible material coupled to said independent poles and to the rebounding mat;

wherein the coupling of the safety enclosure to both the independent poles and to the rebounding mat helps in absorption of impact forces to the safety enclosure.

2. The trampoline of claim **1** further comprising:

a flexible top line that extends between upper end portions of adjacent poles; and

a plurality of brackets, each bracket defining at least one opening to receive the top line and being secured on one of the poles.

3. The trampoline of claim **1** further comprising:

a flexible top line that extends between upper end portions of adjacent poles; and

a flexible bottom line that is attached to the enclosure and that extends between adjacent poles at a level below the top line.

4. The trampoline of claim **1** wherein:

the enclosure comprises plastic safety fencing having a plurality of openings; and

the trampoline further comprises a flexible top line that extends between upper end portions of adjacent poles and is interlaced through openings in the fencing.

5. The trampoline of claim **1** further comprising a plurality of vertically extending legs that support the frame, each pole being secured to both a horizontally extending portion of the frame and one of the legs.

6. The trampoline of claim **1** further comprising a plurality of cross braces, each cross brace having an upper end and a lower end located at an elevation below the upper end, the upper and lower end of each cross-brace being connected respectively to two adjacent poles.

7. The trampoline of claim 1 further comprising an end cap at the top of each pole, the end cap having a shock absorbing element positioned so that the cap absorbs energy when force is applied to the cap.

8. The trampoline of claim 1 further comprising:

a plurality of vertically extending legs that support the frame;

a plurality of fasteners that couple the poles to the legs, each such fastener including at least one U-bolt; and

a plurality of fasteners that couple the poles to the frame, each such fastener including at least one U-bolt.

9. The trampoline of claim 1 further comprising:

an elongated resilient member coupling plural of the poles at upper portions thereof; and

a tensioning device for changing the length of the resilient member, and thus the tension provided thereby.

10. The trampoline of claim 1 further comprising an elongated resilient member coupling plural of the poles, the elongated resilient member having at least one flat face, providing sufficient surface area to inhibit cutting injuries, and tending to automatically rotate To present a flat face towards any impacting body.

11. The trampoline of claim 1 wherein the flexible material is fence netting, two overlapping portions of the fence netting defining a passageway that permits access to the enclosure.

12. The trampoline of claim 1 wherein the trampoline further comprises resilient sheaths around the poles.

13. The trampoline of claim 12 wherein:

the flexible material is fence netting; and

the netting is coupled to each pole through its resilient sheath at plural points therealong, wherein an impact by a jumper against the netting nearest to a first pole is absorbed, in part, by resilient sheaths on plural poles remote from the first.

14. The trampoline of claim 13 wherein the netting is coupled to each sheath through an elongated strap member helically wrapped therearound, the strap distributing force over a larger area of the resilient sheath than a cord, thereby cutting less into the resilient sheath, and providing area of the sheath to absorb the impact.

15. The trampoline of claim 1 further comprising:

a resilient sheath around each pole; and

an end cap on the top of each sheath, the end cap including a sleeve that extends downwardly over at least a top portion of the sheath.

16. The trampoline of claim 1 in which each pole includes an eye-bolt near the top thereof, the eye-bolt serving as a support for the enclosure.

17. The trampoline of claim 1 wherein the flexible material is coupled to the rebounding mat through an inelastic securing member.

* * * * *

UNITED STATES PATENT AND TRADEMARK OFFICE

CERTIFICATE OF CORRECTION

PATENT NO. : 6,053,845
APPLICATION NO. : 09/100586
DATED : April 25, 2000
INVENTOR(S) : Mark W. Publicover et al.

It is certified that error appears in the above-identified patent and that said Letters Patent is hereby corrected as shown below:

On the Title Page, item [75] (names of inventors) should appear as follows:

--[75] Inventors: Mark W. Publicover, Saratoga, California;
Jon H. Greiner, San Jose, California;
J. Scott Publicover, Boise, Idaho;
Donald W. Strasser, Los Gatos, California--

Signed and Sealed this
Seventh Day of August, 2012

David J. Kappos

David J. Kappos
Director of the United States Patent and Trademark Office