PROVISIONAL APPLIATION FOR PATENT COVER SHEET

A/Prov

This is a request for filing a PROVISIONAL APPLICATION FOR PATENT under 37 CFR 1.53(b)(2).

Express Mail No.: EL282685906US Mailing Date: October 15, 1999

Docket No. 12541US01		Type a plus (+) inside this box	+

INVENTOR(s)/APPLICANT(s)

LAST NAME	FIRST NAME	MIDDLE INITIAL	RESIDENCE (CITY AND EITHER STATE OR FOREIGN COUNTRY)
Welch	Alan	B.	2828 West 34th Avenue, Vancouver BC V6N 2J6
Rahardja	Irawan	B.	401-1945 Barclay St., Vancouver BC V6G 1L2
Hebbes	Mike		600 Drake St., Apt. 415, Vancouver BC V6B 5W7

TITLE OF THE INVENTION (280 CHARACTERS MAX)

DIRECTLY ACTUATED INJECTOR

CORRESPONDENCE ADDRESS

Kirk A. Vander Leest
McAndrews, Held & Malloy, Ltd.
500 W. Madison Street, Suite 3400, Chicago

STATE	Illinois	ZIP CODE	60661	COUNTRY	USA

ENCLOSED APPLICATION PARTS (check all that apply)

X	Specification	Number of Pages	17	Small Entity Statement
X	Drawings	Number of Sheets	3	(Other (Specify)

METHOD OF PAYMENT OF FILING FEES FOR THIS PROVISIONAL APPLICATION FOR PATENT (check one)

		FILING FEE AMOUNT ($)
X	A check or money order is enclosed to cover the filing fees.	$150.00
	The Commissioner is hereby authorized to charge filing fees and credit Deposit Account Number 13-0017.	

The invention was made by an agency of the United States Government or under a contract with an agency of the United States Government.

X No.

Yes, the name of the U.S. Government agency and the Government contract number are:_____

Respectfully submitted,

SIGNATURE _____ DATE October 15, 1999

TYPED or PRINTED NAME Kirk A. Vander Leest REGISTRATION 34,036

Additional inventors are being named on separately numbered sheets attached hereto.

USE ONLY FOR A PROVISIONAL APPLICATION FOR PATENT

TITLE OF THE INVENTION

Directly Actuated Injector

CROSS-REFERENCE TO RELATED APPLICATIONS

Not applicable

STATEMENT REGARDING FEDERALLY SPONSORED RESEARCH OR DEVELOPMENT

Not Applicable.

BACKGROUND OF THE INVENTION

The present invention relates generally to high pressure fuel injectors for internal combustion engines, and, more specifically, to an injection valve that is directly controllable by a position activating material (piezoelectric or magnetostrictive) and which includes a passive hydraulic link.

Direct injection of a gaseous fuel into the combustion chamber of an internal combustion engine is desirable for several reasons. For example, the direct injection allows charge stratification, reducing throttling losses. Additionally, with late injection, high-compression ratio can be maintained, maintaining efficiency.

Further, by direct injection as natural gas, the emissions of NOx and PM are significantly reduced. The directly injected gaseous fuel can be ignited with a glow plug, with a spark plug or with pilot diesel fuel. The gas needs to be injected at high pressure to overcome the combustion chamber pressure which is high at the end of the compression. The injection pressure must be high enough that good mixing occurs between the injected fuel and the chamber air.

Direct injection at high pressures presents several challenges. The use of high pressure fuels for direct injection results in high pressures existing within the injection valve or injector. As a result, the injection valve must typically be strongly seated to avoid leakage of the fuel into the combustion chamber. Moreover, higher forces are needed to open the injection valve than in low pressure systems. When open, the injection valve may be subjected to high forces from the fuel. Additionally, there is only a small window of time during which the fuel can be injected. For example, at 4500 RPM, at full load, all the fuel must be injected in under 1.5 millisecond.

Nearly all prior direct fuel injection systems in internal combustion engines have been hydraulically-actuated. These systems rely on the rapid pressure build-up in a hydraulic liquid that forces an injection valve to open. The injection is terminated by causing a pressure drop in the hydraulic liquid, such that the forces on the injection valve are reduced and the valve closes. In the context of a gaseous injector, hydraulic operation present several drawbacks, including:

- the need for additional hydraulic hardware such as pump, valves, and reservoir;

- the need for a seal to be established between the hydraulic fluid and the gaseous fuel; and
- increased bulkiness of the injection valve assembly.
- slower response of the system due to time delay of the hydraulic fluid between the electrical valve hardware and the needle which controls gas flow from the injector.

Moreover, the degree of controllability of the movement of the injection valve is low when the motive force is provided by a pressurized fluid rather than by a directly controllable source. In this respect, it is difficult to do lift control, with some limited capabilities when using double-spring configuration. Therefore, it is desirable to avoid the use of hydraulics to operate gas injectors – particularly for high speed engines.

In response to the drawbacks with hydraulic activation, Krepec, Hong of Concordia University in Montreal have used a solenoid actuator to actuate the injection valve because of its simplicity and reliability. Similarly, U.S. Patent No. 5,035,360 to Green et al. also discloses a directly actuated gas only injector using solenoid actuator. However, solenoid actuators have a relatively lower force per unit area and injectors end up being bulky when a high force associated with high pressure gas metering is present. The bulkiness of such systems also reduces the frequency response of the needle valve. Solenoids also do not work well for delivering a small amount of fuel, such as needed at low loads, particularly at high-speed. This is because the minimum opening time of the needle tends to be long. Additionally, Solenoid actuators are capable of substantial lift, of the order of 20

thousands of an inch (500 micron), but they do not permit control of the lift. Specifically, solenoid technology is only known to be able to offer duration control (how long the valve is open for) and not position control (how high the valve is lifted).

It is also known to use piezoelectric or magnetostrictive actuation (devices which can change their dimensions under the effect of an electric or magnetic field) for directly actuated injection valves. For example, U.S. Patent 5,031,841 to Schäfer describes metering valve using an actuating member, which according to the patent could be a piezoelectric stack or a magnetostrictive actuator, and the addition of a diaphragm which has the dual purpose of acting as a spring biasing the valve in its closed position and of providing a seal between the metered fluid and the actuator.

Piezoelectric or magnetostrictive actuation devices have also been used in injection valves to actuate an internal hydraulic control valve. For example, U.S. Patent No. 5,819,710 to Huber describes an injection valve within which a servo valve is used, which servo-valves is actuated by an actuating member, which could be a piezoelectric stack or a magnetostrictive material, which actuator can be controlled to close slowly to improve life, and which servo valve actuator can be matched to a special part to compensate for differences in thermal expansion. (See column 2, lines 50-42).

U.S. Patent No. 5,845,852 to Waldman et al. describes an injector for directly moving a three-way valve to allow the main injection valve to open. The patent describes a piezo-electric actuator acting through the intermediate of a self-

locking preload assembly. This self-locking preload assembly has 3 functions: i) compensate for dimensional changes and/or imperfections, ii) offsets some of the upward force due to fuel pressure, iii) preloads the piezoelectric stack for better performance.

Similarly, U.S. Patent No. 5,779,149 to Hayes Jr. describes an injector using a piezoelectric actuator acting on a control valve through the intermediate of a hydraulic amplifier which acts as a movement amplification. The control valve allows the main injection valve to open and close to meter the fuel injection.

In the above examples, actual injection valve was not directly actuated by piezoelectric or magnetostrictive actuator. Rather, the piezoelectric or magnetostrictive actuation was applied to a control valve, which in turn controlled the injection valve. Such a design requires the intermediate action of a hydraulic fluid, which is acceptable when a hydraulic fluid such as diesel is injected. However, when a gaseous fuel is used, this approach requires an added feed system for the hydraulic fluid.

SUMMARY OF THE INVENTION

An objective of the invention is to provide an injection valve that allows late-cycle high pressure direct injection of gaseous fuels in engines.

Another objective of the present invention is to provide an injection valve that is directly controllable by a position activating material such as a piezoelectric or magnetostrictive material.

Mercedes EX1007, Page 6 of 21
Mercedes v. Westport
IPR2023-00351

Still another objective of the present invention is to provide an injection valve that eliminates the use of hydraulic fluid to actuate the injection valve.

Another objective of the present invention is to provide an injection valve that accounts for differential thermal expansion.

A further objective of the present invention is to provide an injection valve that includes a passive, permanent hydraulic link to account for differential thermal expansion.

Yet another objective of the present invention is to provide a directly actuated injector that provides for partial lifting of the injection valve in a repeatable manner.

A further objective of the present invention is a method of controlling an injection valve that compensates for the delay time between commencement of excitation of the electromagnetic coil and the actual movement of the valve body.

A still further objective of the present invention is a method of controlling an injection valve that compensates for the delay time between commencement of excitation of the electromagnetic coil and the actual movement of the valve body by preloading a magnetostrictive or piezoelectric material through the application of a shaped voltage control pulse.

Another objective of the present invention is to provide a directly actuated injector that is simple and economical to manufacture.

Another objective of the present invention is to provide a directly actuated injector that is durable.

These and other objects and advantages are provided by a directly actuated injector as described below.

BRIEF DESCRIPTION OF THE SEVERAL VIEWS OF THE DRAWING

Figure 1 is a cross-sectional view of a directly actuated fuel injection valve in accordance with the present invention.

Figure 2 is an enlarged view of an upper portion of the fuel injection valve of Figure 1.

Figure 3 is an enlarged view of a lower portion of the fuel injection valve.

Figure 4 is a timing diagram for the control voltage supplied to the fuel injection valve of Figure 1.

Figure 5 is an alternative timing diagram for control voltage applied to the fuel injection valve of Figure 1.

DETAILED DESCRIPTION OF THE INVENTION

General Injector

Referring to the drawings, a directly actuated fuel injection valve 10 for internal combustion engines includes a valve housing 12 fitted with a needle valve 14 biased by a spring 16 on a seat 18 (Identify in Fig. 1), an actuator assembly 20 of the piezoelectric or magnetostrictive type, and a hydraulic link 22 between the needle valve 14 and the actuator 20. The valve housing 12 is substantially hollow, having a lower chamber 24 at the end proximate to the engine combustion chamber in which houses the actuator assembly 20. The valve housing 12 also has a larger

diameter upper chamber 26 that houses a hydraulic chamber 28 and the spring loaders. There is an aperture 32 at the end of the valve housing 12 proximate to the engine combustion chamber that is sized to receive a valve tip 34. The opposite end of the valve housing 12 is fitted with a valve cap 36 to seal the valve housing 12. When the actuator assembly 20 is energized, it acts to open the needle valve 14 through the hydraulic link 22. This moves the needle 14 off its seat 18, allowing fuel to flow into the engine combustion chamber.

Actuator Assembly

The actuator assembly 20 is made of advanced materials, such as a piezoelectric stack or magnetostrictive material, that change shape under the application of an electric or magnetic field. The actuator assembly 20 is located in a cylindrical cavity within the valve housing 12. In the preferred embodiment, the actuator assembly 20 is a magnetostrictive actuator assembly consisting of an annular magnetostrictive actuator 40, an electric coil 42 around the outer diameter actuator 40, a flux tube 44 around the electric coil and electric leads (not shown) for delivering a control voltage to the coil 42. The flux tube 44 is formed from common carbon steel, with lengthwise slit to break eddy currents. A port for the electric leads is shown generally at 43. In order to provide an upward moving needle valve 14, the actuator assembly 20 is located concentrically around the needle valve 14.

The actuator assembly is supported at the bottom by a lower pole 46, and at the top by an inner pole 48 and top outer pole 50. The poles 46-50 are formed by a

suitable material such as steel CS1018 or low hysteresis steel and also serve as flux paths. The coil 42 and flux tube 44 are held in place by a locking nut 51 which threads into the inner wall of the housing 12 above the outer pole 50.

When a voltage is applied in the electric coil 42, the magnetostrictive annular piece 40 expands in the direction of the magnetic field, (i.e., in the lengthwise direction). The displacement can be as much as 0.1% of the length of the actuating material, but is usually 0.065% of the length of the material at higher engine temperatures.

A rod of 100 mm was initially chosen to provide a lift of at least 50 μm. Additionally, the thickness of the magnetostrictive material 40 was chosen to provide sufficient force to overcome all of the opposing forces which hold the injector closed. If the area is not sufficient, the opposing forces can hold the actuator at zero travel even when it is fully energized. This mode is termed the "blocked force" mode.

To increase the displacement per unit magnetic field (for magnetostrictive actuators) or electric field (for piezoelectric actuators), the actuating material 40 is pre-compressed (to approximately 1000 psi) by a hydraulic chamber spring 52 (which shown as a Belleville spring, but could be a coil spring) acting on the hydraulic chamber 28, which is in communication with the actuating material through the inner pole

When a piezoelectric actuator is used, the assembly (magnetostrictive material, coil and flux tube) is replaced by a piezoelectric stack. When a voltage is

Mercedes EX1007, Page 10 of 21
Mercedes v. Westport
IPR2023-00351

applied through a connector, the piezoelectric stack expands and develops a motive force.

NeedleValve, Valve Seat

The needle valve 14 includes a long cylindrical member 54 mounted concentrically within the valve housing (in the lower chamber 24). The needle valve spring 16 biases the needle valve 14 seated against a sealing surface 56 on the inner part of the valve tip 34 (see Figure 3). Within the tip 34, there is an annular cavity 60 around the lower portion of the needle valve 14, where the high pressure gas resides between injections. The needle valve 14 is positioned within the actuator assembly 20, guided at the bottom by a lower guide 62, and at the top by an upper needle guide 64 located within the inner pole 48. There is an annular space 66 (see Fig. 3) between the needle valve 14 and the actuator assembly 20 to allow the gas to circulate through the housing 12 from the inlet port 70 at the top to the annular cavity 60 at the bottom.

The needle valve 14 also includes a larger diameter portion 72 near its end opposite to the engine cylinder which acts as a hydraulic piston. Displacement of the actuating member 40 is transmitted to the needle valve 14 through this hydraulic piston 72 and through the hydraulic fluid as discussed below.

As was indicated above, the needle valve 14 is biased into place by a needle valve spring 16. The needle valve spring 16 acts on the needle through a needle spring guide 74. The needle valve spring 16 is housed in a hydraulic chamber

spring adjuster 76, and is pre-loaded through the needle valve spring adjuster 78 and locking nut 80.

Since the valve lift is small, the radius of the valve is designed to be large to ensure sufficient flow of fuel passes the valve opening and into the combustion chamber. (The flow area is equal to 2π x radius x Lift, where the radius is that of the valve. Hence, a small lift can be compensated by a larger radius).

Also, in the embodiment shown, the seat of the needle valve has a large included angle which is chosen to maximize flow following the sealing area. As well the differential angle between the needle and seat is chosen so that the flow area does not decrease as gas moves inward to the central throat 100 of the nozzle.

Hydraulic Link

The hydraulic link 22 is provided to accommodate the differing thermal expansions of the actuating material and the injection valve. Specifically, even though the valve is designed to reasonably match the thermal expansion rates of the other components, the temperature may not always be distributed evenly through the injector body due to factors including (1) heat from the coils; (2) hysteresis in the actuator mechanism; and (3) heat transfer from the cylinder head or the combustion chamber via the injector tip. Furthermore, the whole assembly could be at temperatures ranging from –40 to 125 °F. The relative elongation of the needle valve and of the actuating assembly parts under such temperature variation would be greater than the targeted lift.

Dimensions can also change due to friction and wear from the opening and closing action of the injection valve. The hydraulic link 22 removes the need for highly accurate manufacturing tolerances on the actuating material, the needle valve, the pole pieces, and the valve housing.

The hydraulic link 22 consists of a hydraulic cavity 84 formed by a hydraulic chamber 28 and a hydraulic chamber cap 86. The cavity 84 is filled with a viscous fluid. Within the chamber 28 is located the hydraulic piston part 72 of the needle valve 14. The chamber 28 is fitted around the hydraulic piston 72. O-ring seals 90 are located in the hydraulic chamber cap 86 and in the bottom of the hydraulic chamber 28 to prevent the fluid from leaking out of the cavity 84. The diametrical clearance between the outside diameter of the hydraulic piston 72 and the inside diameter of the hydraulic chamber 28 is extremely small (on the order of 50 to 250 microns). The exact clearance is dependent on the viscosity of the chosen fluid. The hydraulic flow in this clearance is governed by the Hagen-Poiseuille Flow and is very small. The hydraulic fluid, which should be chosen to be quite viscous, acts as a solid during fast motions, because there is little flow going around the needle piston. The fluid also needs to be an extremely stable fluid and compatible with a wide range of temperatures. A suitable hydraulic fluid is DuPont "Krytox" which is available in a range of viscosities for application to different size pistons and gaps. This fluid also provides excellent lubricating characteristics for the o-rings 90. The spring 52 biases the hydraulic chamber 28 against the actuating material 40, through the inner pole 48. The pre-load on the hydraulic chamber 28 spring 52 can be adjusted through the hydraulic chamber 28 spring adjuster 76, which is threaded in

Mercedes EX1007, Page 13 of 21
Mercedes v. Westport
IPR2023-00351

the upper chamber of the valve housing 12. The spring 16 provides a force which assures that the needle is always biased toward the sealed position. In this way, the hydraulic assembly will auto-adjust itself for differences in part lengths and wear.

Operation:

When voltage is applied in the coil 42, a magnetic flux develops that flows through the magnetostrictive material 40, the poles 46-48 and the flux tube 44. The magnetostrictive material 40 expands or lengthens and pushes the hydraulic chamber 28 upward against the hydraulic link spring 52. Because the actuation occurs suddenly (on the order of 200 μs), the hydraulic fluid between the hydraulic chamber 28 and the needle valve piston 72 does not have the time to flow around the piston 72. Instead, the trapped fluid acts as a solid and transmits the movement of the magnetostrictive material 40 to the needle valve 14, causing it to lift against the needle spring 16. Because the injector stays open for such a brief period (a few milliseconds) it does not have time to allow the chamber 28 to move significantly relative to the valve 14.

When the needle valve 14 is open, gas flows through the orifice 100 or orifices located in the tip. As was explained above, the gas actually circulates from the top of the injector 10 to the bottom of the injector, through the actuator assembly. As this occurs, the gas cools the actuator assembly. The flow path is arranged to primarily cool the ID of the coil and the OD of the actuator. But a small percentage, perhaps 20%, can also flow on the ID of the actuator material. Thermal modeling predicts a temperature rise of less than 10°C.

When the coil 42 is de-energized, the actuator material 40 will shorten in length. The hydraulic chamber 28 then follows the actuator motion and moves downward or towards the closed position. Spring 52 provides the motive force to return the assembly to the closed position by pushing against the upper hydraulic chamber 22. The hydraulic fluid, again does not have time to move around the piston quickly, so pressure builds up on the upper side of the piston 72. The force produced by the hydraulic pressure on the piston 72 allows the needle to return to the closed position. After being seated, a small amount of self-adjustment of the needle 14 relative to the hydraulic body chamber 22 will occur to correct the relative small motion of the needle while in the open state.

To accommodate thermal elongation, the fluid inside the hydraulic chamber 28 leaks from one side to the other, while the hydraulic chamber spring 52 ensures that the hydraulic chamber 28 and the needle valve 14 are in direct contact at all time.

During the injection event, a small amount of hydraulic fluid may leak from one side of the hydraulic piston to the other. Calculations indicate that the relative motion of the piston with respect to the hydraulic chamber 28 during a long injection event will be about 2 microns, much less than the total displacement of the needle valve (50 microns). Also, the bulk modulus of the chosen fluid must be high such that there is little displacement due to the compressibility of the chosen hydraulic fluid.

Since the injector is closed for most of the time (typically over 90%) there is enough time for the chamber to move to "re-zero" itself. The zero-position is the

position of the hydraulic piston within the hydraulic chamber 28 after assembly of the injection valve. The zero position is not the same for all injectors due to variation in the length of components within manufacturing tolerances. Also the zero-position may vary depending on the actual temperature of the components of the injection valve.

Control Strategy

Waveforms for controlling the injection valve are shown in Figures 4 and 5. Several features are used to control the actuating member.

As is illustrated in Figure 4, first, to promote fast opening, the voltage is spiked a first level V_1 to ramp the current faster in the coil. The voltage V_2 during the main injection event, once the material is energized, should be maintained in the range of 20 to 30 V. The initial or overshoot voltage V_2 is much higher and could be on the order of 10 times higher than the voltage V_1, i.e., on the order of 200 to 300 V. If necessary, the voltage can be temporarily reversed (as is shown by the voltage V_3) to lower the average current to a level which allows quick attainment of partial lift for better flow control than that which can be obtained purely through pulsewidth modulation.

Second, the valve closure can be smoothed by controlling the voltage to the shape shown in Figure 4, which shows an initial reversal to negative voltage value V_4 to accelerate the closure and then a positive voltage V_5 to slow-down the valve before going to zero voltage.

Third, lift control could be used as shown in Figure 5, where the voltage V_6 may be brought to a value lower that V_1, limiting the elongation of the magnetostrictive voltage.

The above described injection valve and control strategy provides several benefits.

- Direct actuation of the needle means there is no need for hydraulic fluid supply system.
- The passive hydraulic system compensates for thermal expansions differences between the materials, for wear due to prolongated operation and for small differences due to manufacturing.
- Concentric needle-valve/actuating member construction ensures compactness of an inward opening injector despite need for relatively long material piece.
- Direct actuation of the needle permits to throttle the gas flow, and reduced main valve seat wear.
- Direct actuation simplifies the injector construction.
- The use of axisymmetric cylindrical parts and few tight tolerances on the stack, makes injector should be relatively straightforward to machine and assemble.
- For a gas injector, it may be more critical to slow down the main injection valve, because there is no liquid fuel to damp the needle closing. By shaping the voltage applied to the coil, it is possible to

achieve slow closing of the injection valve to reduce impact on the seat.

- The magnetostrictive (or piezoelectric) actuator provides a sharp actuating pulse to displace an inward opening injection valve with low lift and a relatively large sealing diameter
- Pre-loading the actuator which increases the displacement per unit energy input.
- Position control permits reduced injection at lower loads and reduced premixed burning.
- Position control permits soft seating which reduces wear on seat.
- Passive hydraulic link accommodates relative increases and decreases of valve length by correcting for (1) thermal changes which occur over several minutes, and (2) wear changes which occur very slowly over the service life of the components.

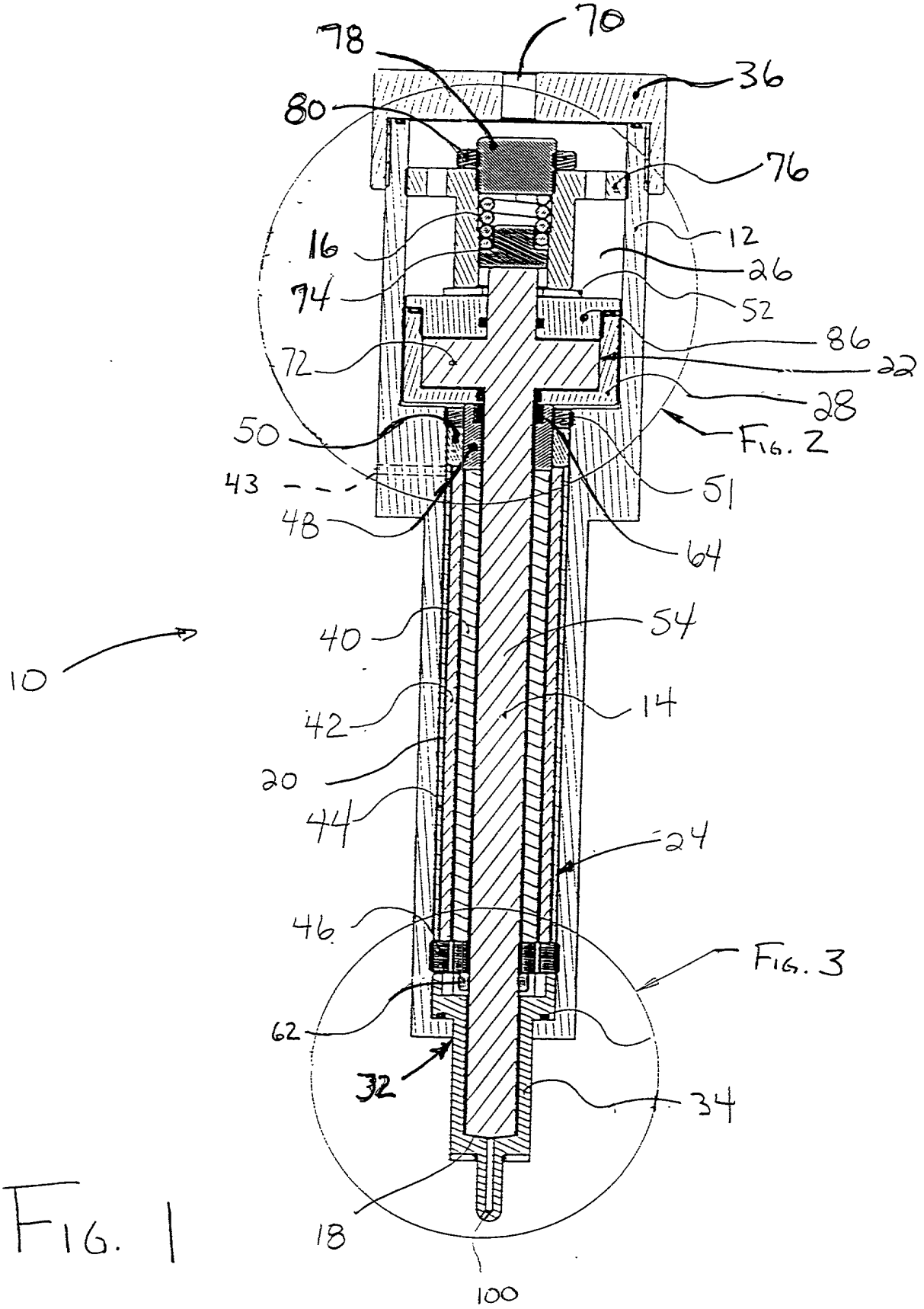
70
78
36
80
76
16
12
26
74
52
86
72
22
28
50
Fig. 2
43
51
48
64
40
54
10
42
14
20
44
24
46
Fig. 3
62
32
34
18
100

Fig. 1

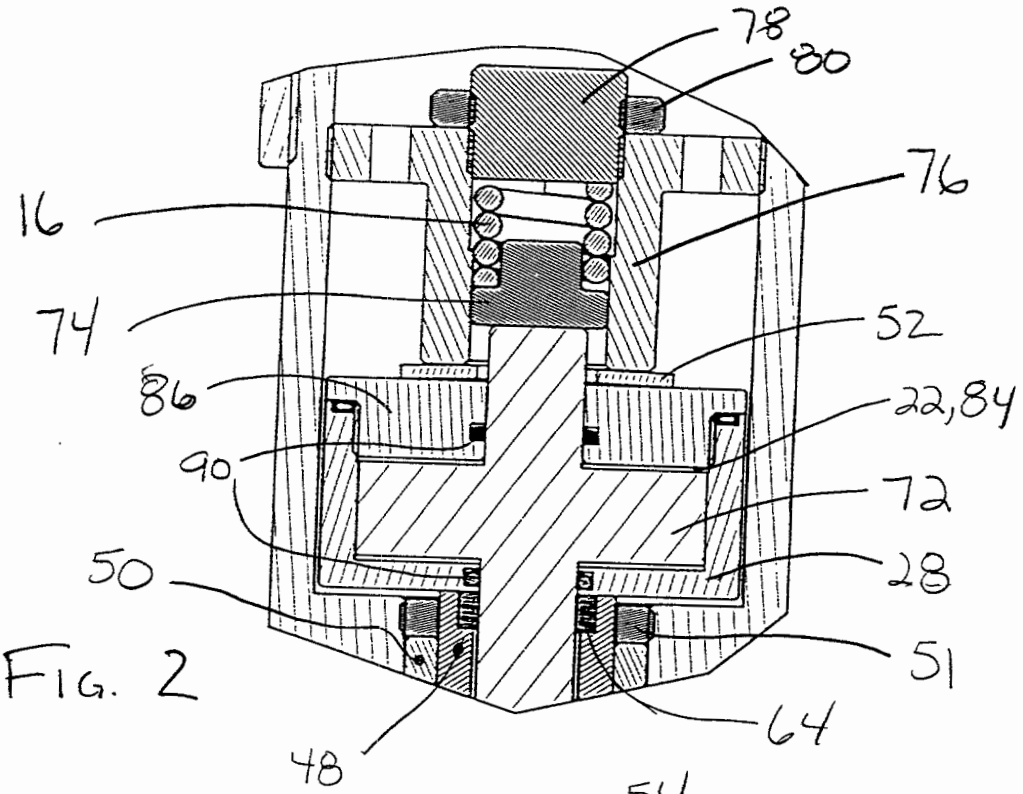
78
80
76
16
74
52
86
22,84
90
72
50
28
51
48
64

FIG. 2

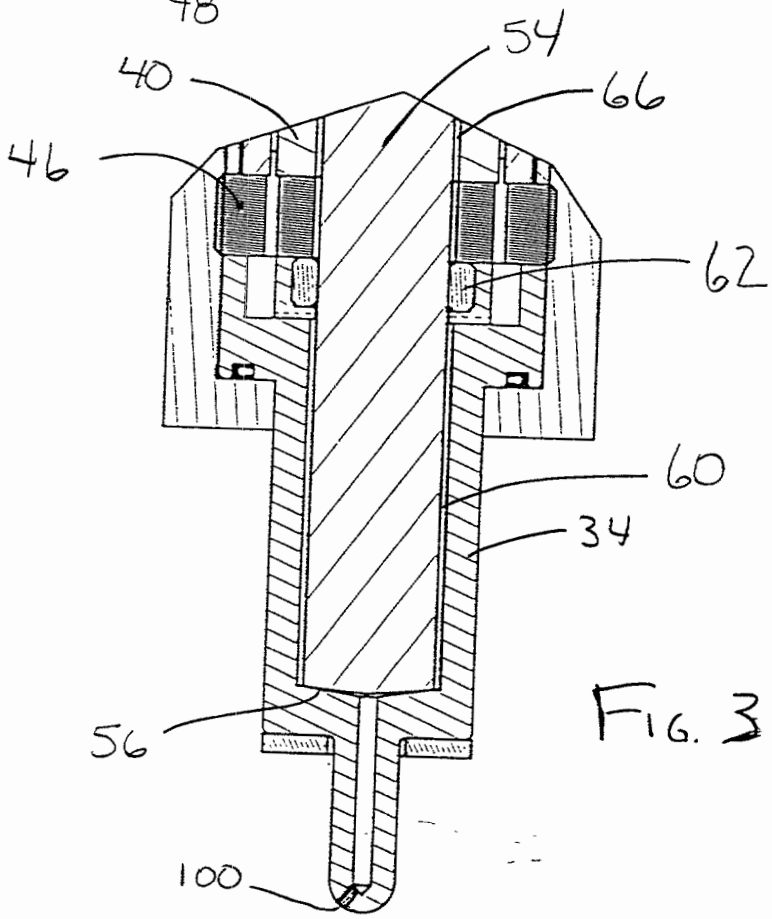
54
40
66
46
62
60
34
56
100

FIG. 3

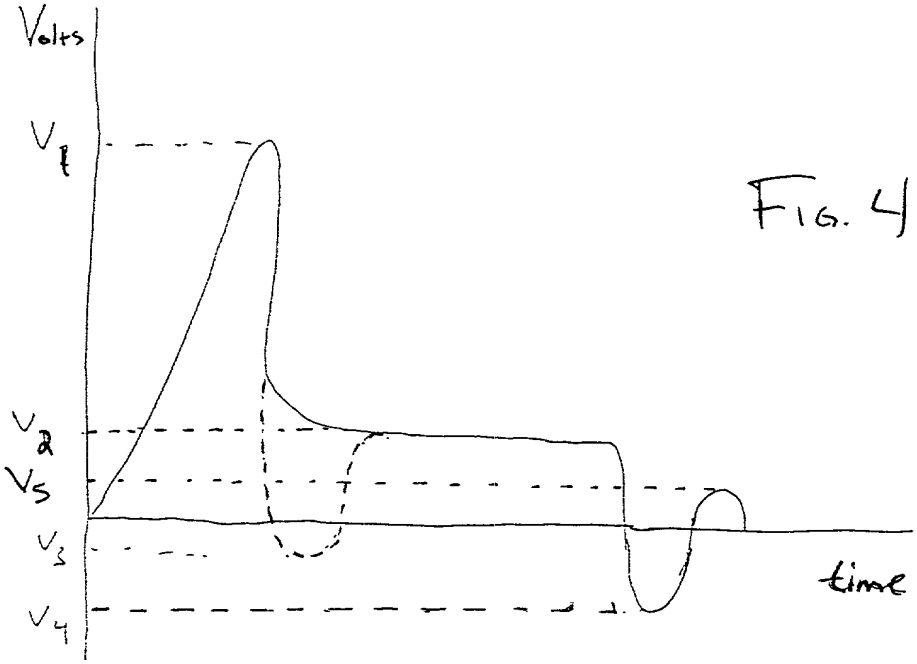

FIG. 4

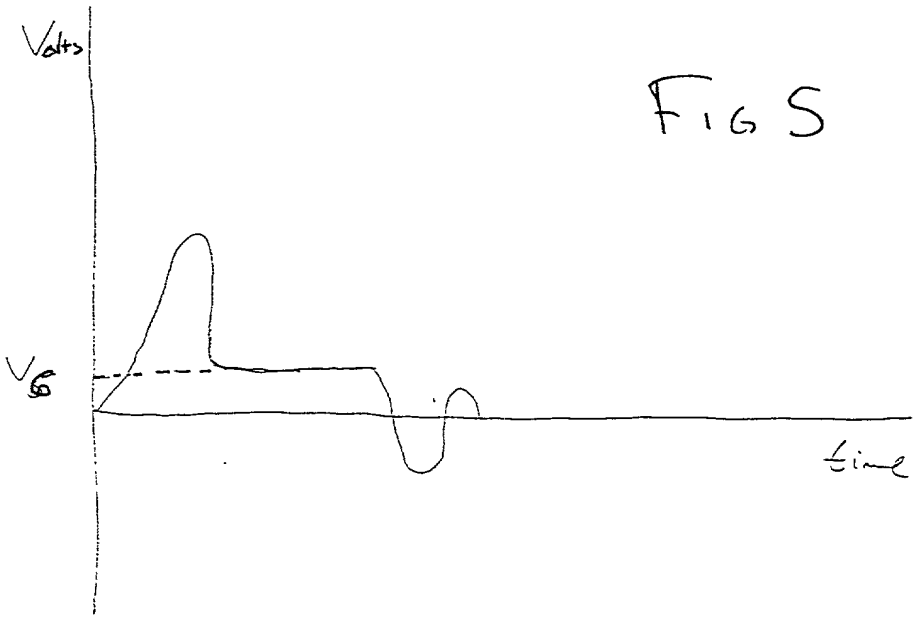

FIG 5