US005630550A

United States Patent [19]

Kurishige et al.

[11] Patent Number: 5,630,550

[45] Date of Patent: May 20, 1997

[54] **FUEL INJECTION SYSTEM**

[75] Inventors: **Masahiko Kurishige**; **Koji Hasunaka**; **Masaaki Kawamoto**; **Michio Fujiwara**; **Shinji Nakadeguchi**, all of Amagasaki, Japan

[73] Assignee: **Mitsubishi Denki Kabushiki Kaisha**, Tokyo, Japan

[21] Appl. No.: **427,830**

[22] Filed: **Apr. 26, 1995**

[30] **Foreign Application Priority Data**

Aug. 25, 1994 [JP] Japan 6-201085

[51] **Int. Cl.**[6] **F02M 51/06**

[52] **U.S. Cl.** **239/533.8**; 239/584

[58] **Field of Search** 239/533.2, 533.4, 239/533.8, 533.9, 584

[56] **References Cited**

U.S. PATENT DOCUMENTS

4,687,136	8/1987	Ozu	239/533.8
4,909,440	3/1990	Mitsuyasu	239/533.8
4,986,472	1/1991	Warlick	239/533.8
5,271,565	12/1993	Cerny	239/533.8
5,335,861	8/1994	Matusaki	239/533.8
5,452,858	9/1995	Tsuzuki	239/533.8

FOREIGN PATENT DOCUMENTS

187363 7/1989 Japan .

Primary Examiner—Robert J. Oberleitner
Assistant Examiner—C. T. Bartz
Attorney, Agent, or Firm—Sughrue, Mion, Zinn, Macpeak & Seas

[57] **ABSTRACT**

A fuel injection system permits the use of hydraulic control oil as a pressure transmitting medium and enables reliable valve opening and closing performance regardless of operating environment. The housing of the fuel injection system is constituted by a valve main body and a cylinder main body, the flowing channel of fuel being airtightly separated from a pressure control chamber. The cylinder main body incorporates a piezoelectric element, which changes the fluid pressure of the pressure transmitting medium in the pressure control chamber, a piston, and a cylinder having an inflow/outflow hole. A needle valve is installed, penetrating the cylinder main body so that the distal end thereof is located in a needle guide cavity of the valve main body and the other end thereof is located in the cylinder.

7 Claims, 10 Drawing Sheets

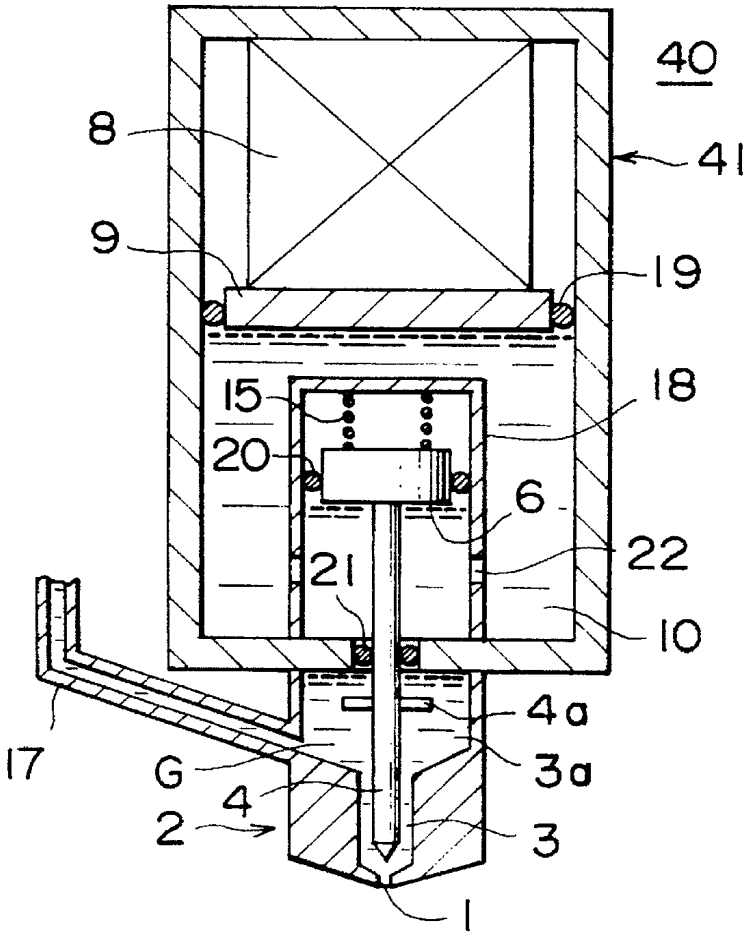

FIG. 1

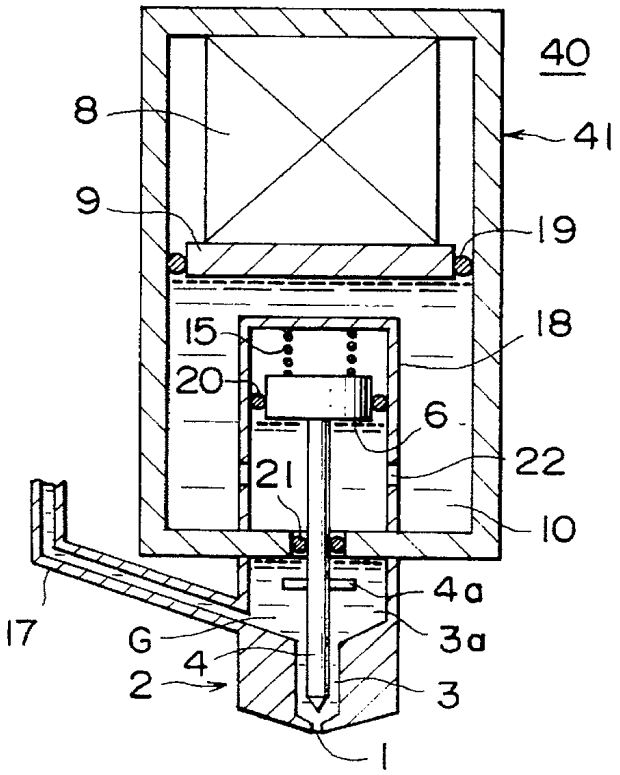

FIG. 2

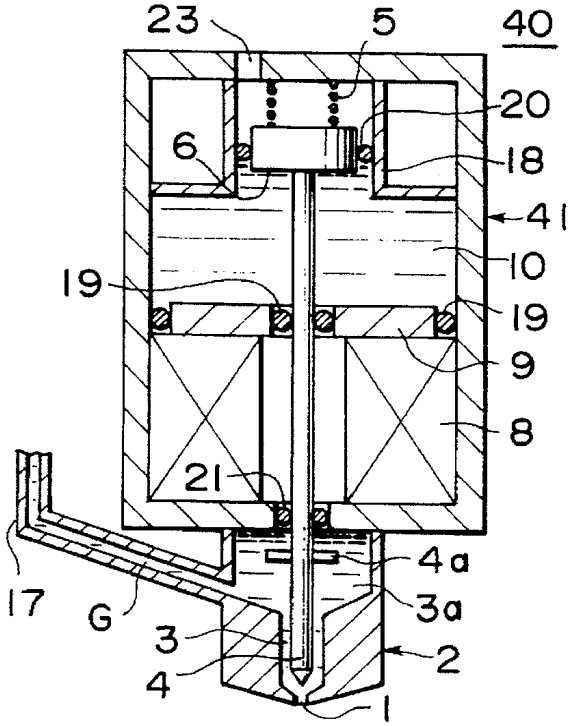

FIG. 3

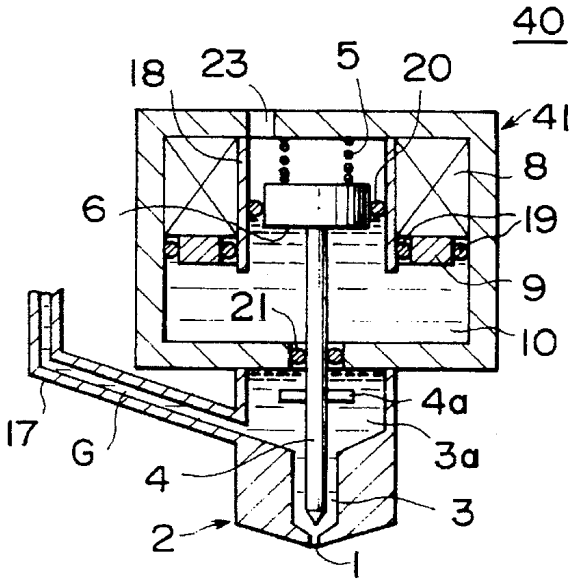

FIG. 4

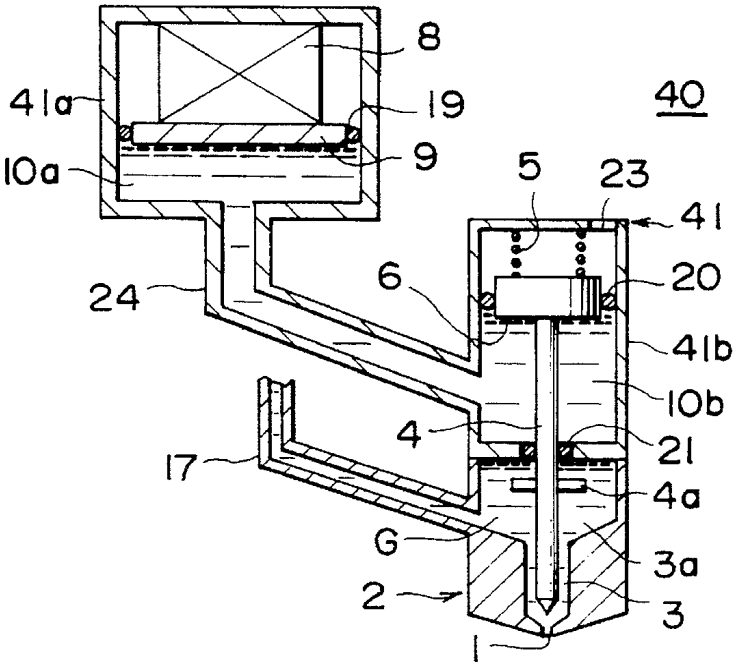
8
41a
19
40
10a
9
5
23
41
6
20
24
41b
10b
4
21
17
4a
G
3a
2
3
1

FIG. 5

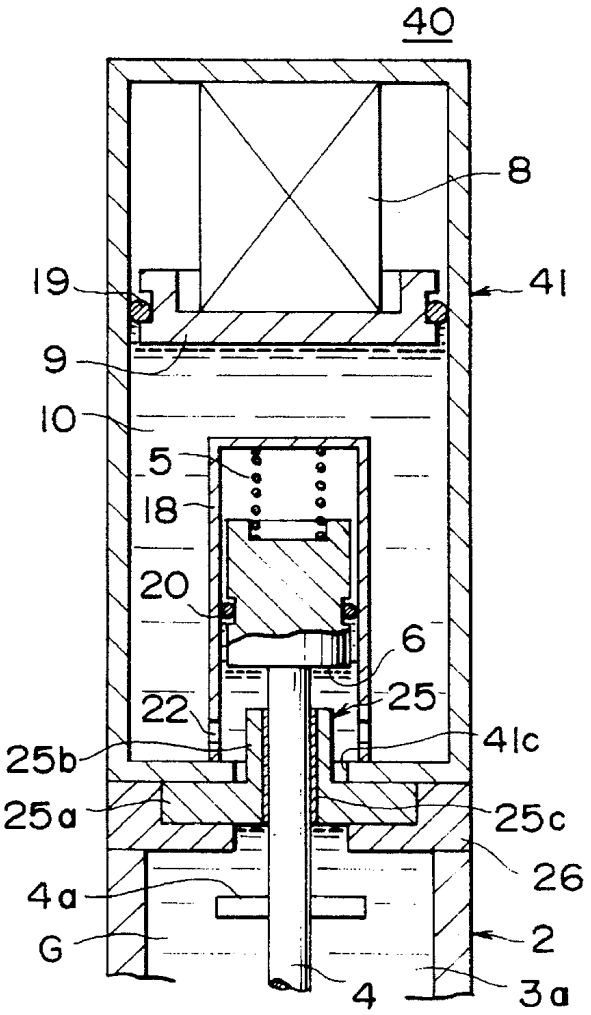
40
8
19
41
9
10
5
18
20
6
25
22
41c
25b
25a
25c
26
4a
G
2
4
3a

FIG. 6

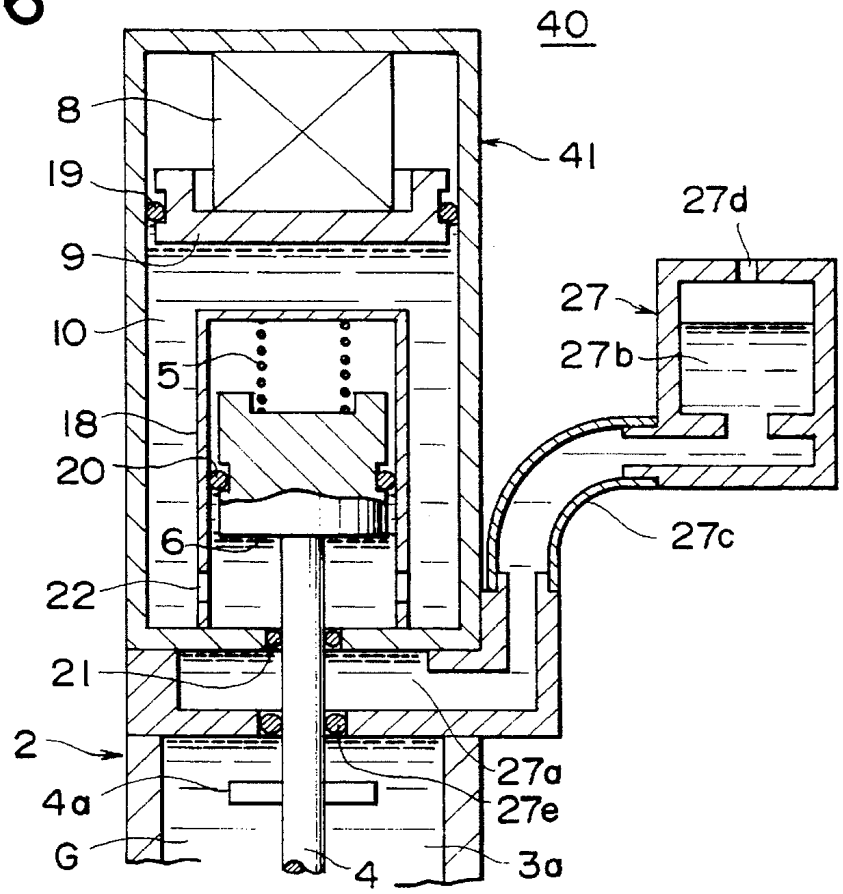
40
8
41
19
27d
9
27
10
27b
5
18
20
27c
6
22
21
2
27a
4a
27e
G
4
3a

FIG. 7

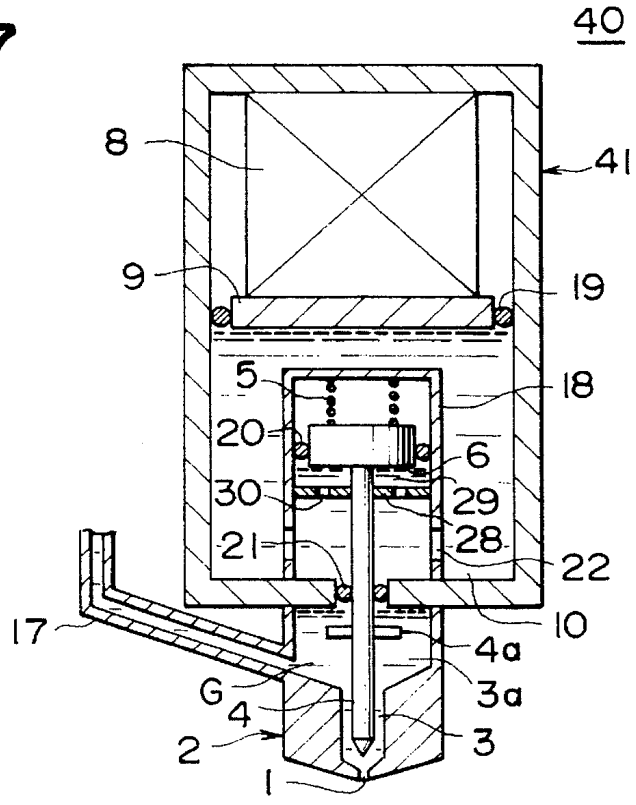
40
8
41
9
19
5
18
20
6
30
29
21
28
22
17
10
4a
G
3a
4
2
3
1

FIG. 8A

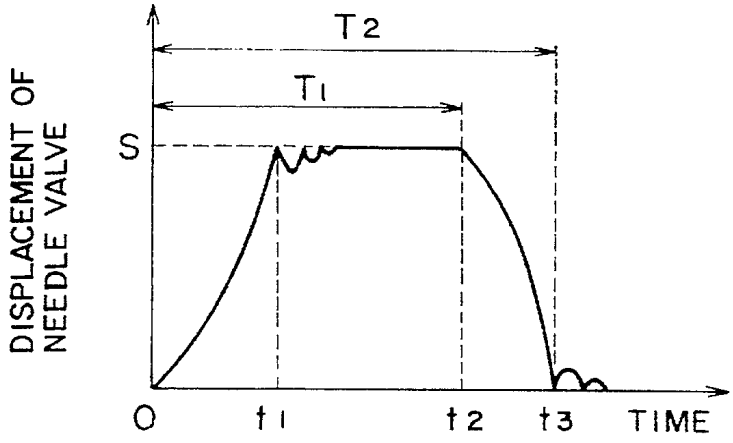

FIG. 8B

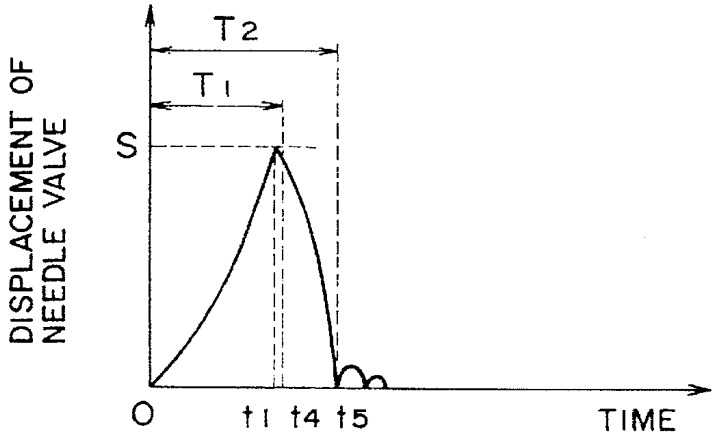

FIG. 8C

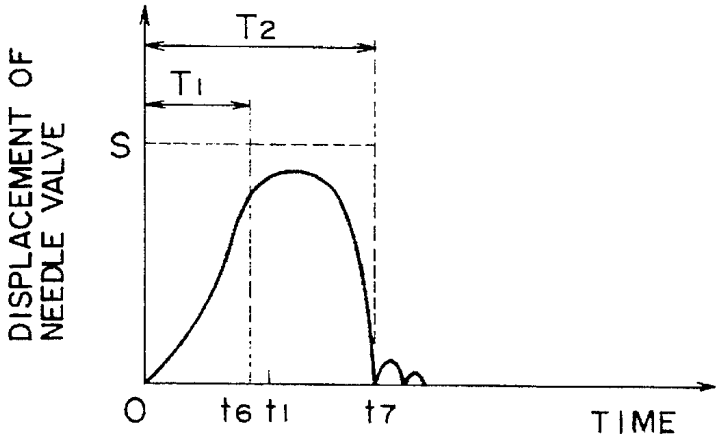

FIG. 9

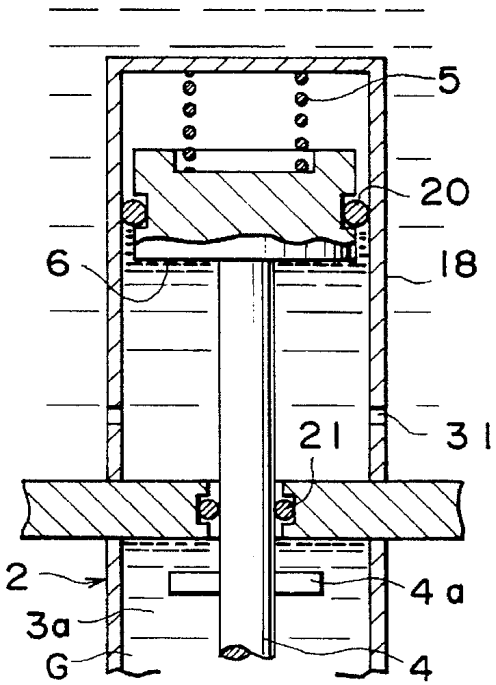

FIG. 10

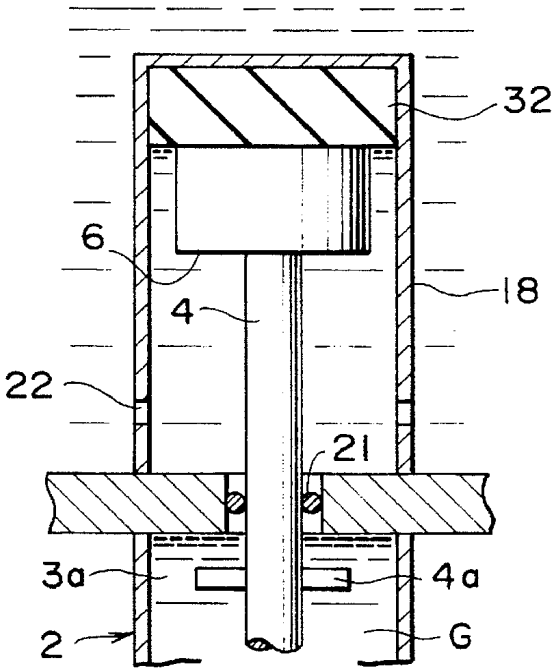

FIG. 11

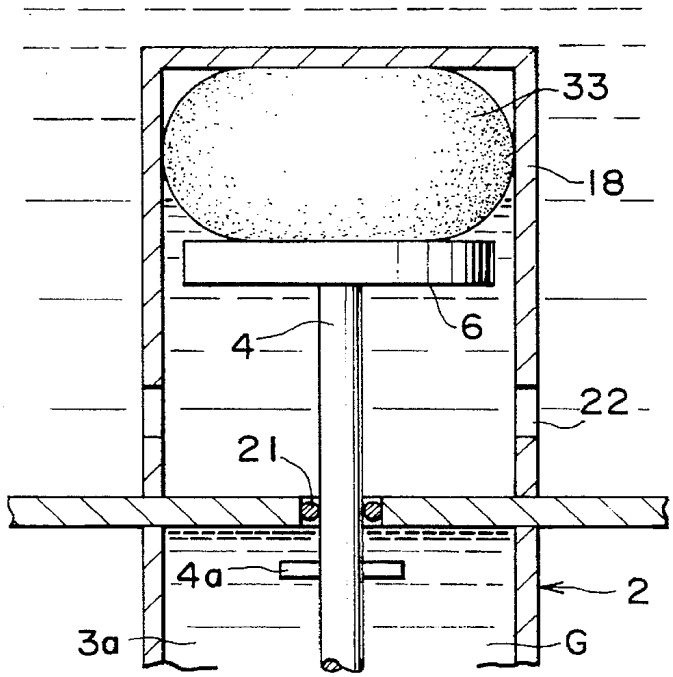

FIG. 12

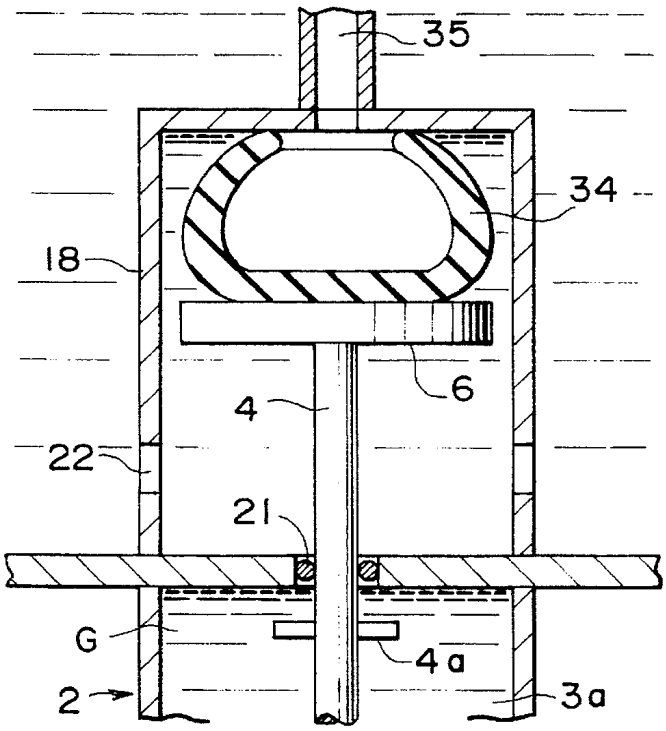

FIG. 13A

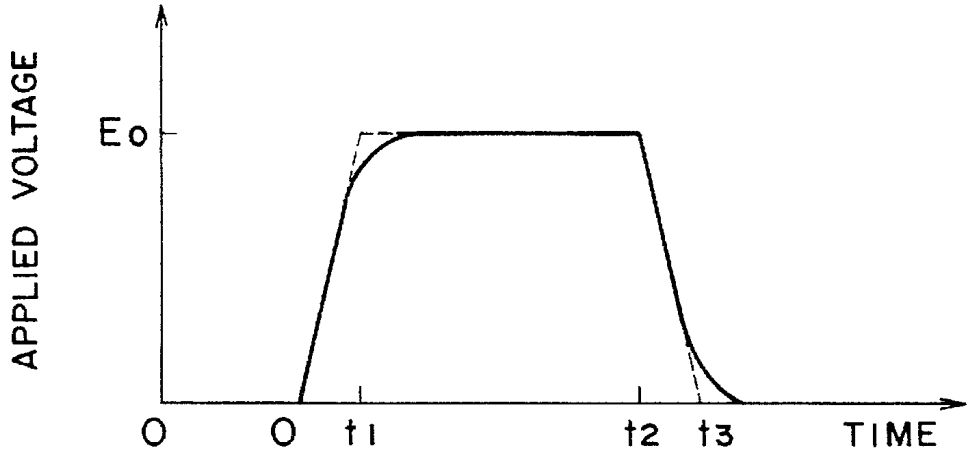

FIG. 13B

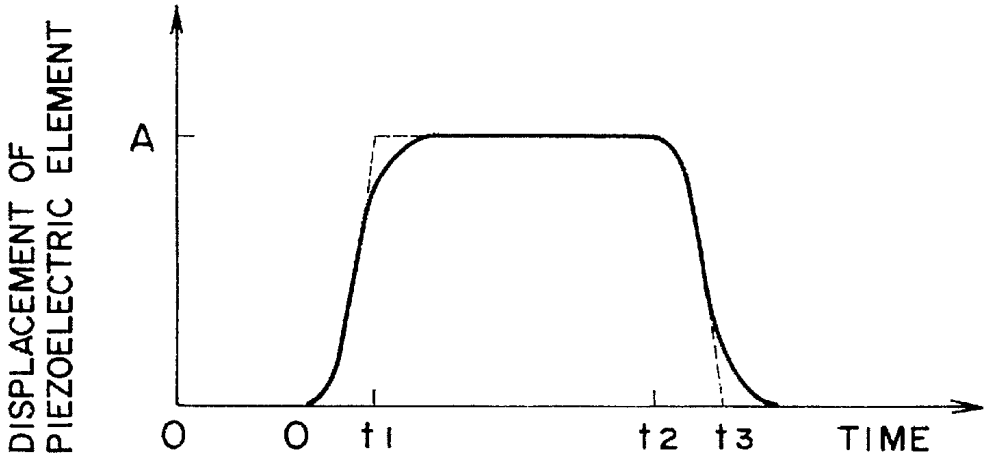

FIG. 14

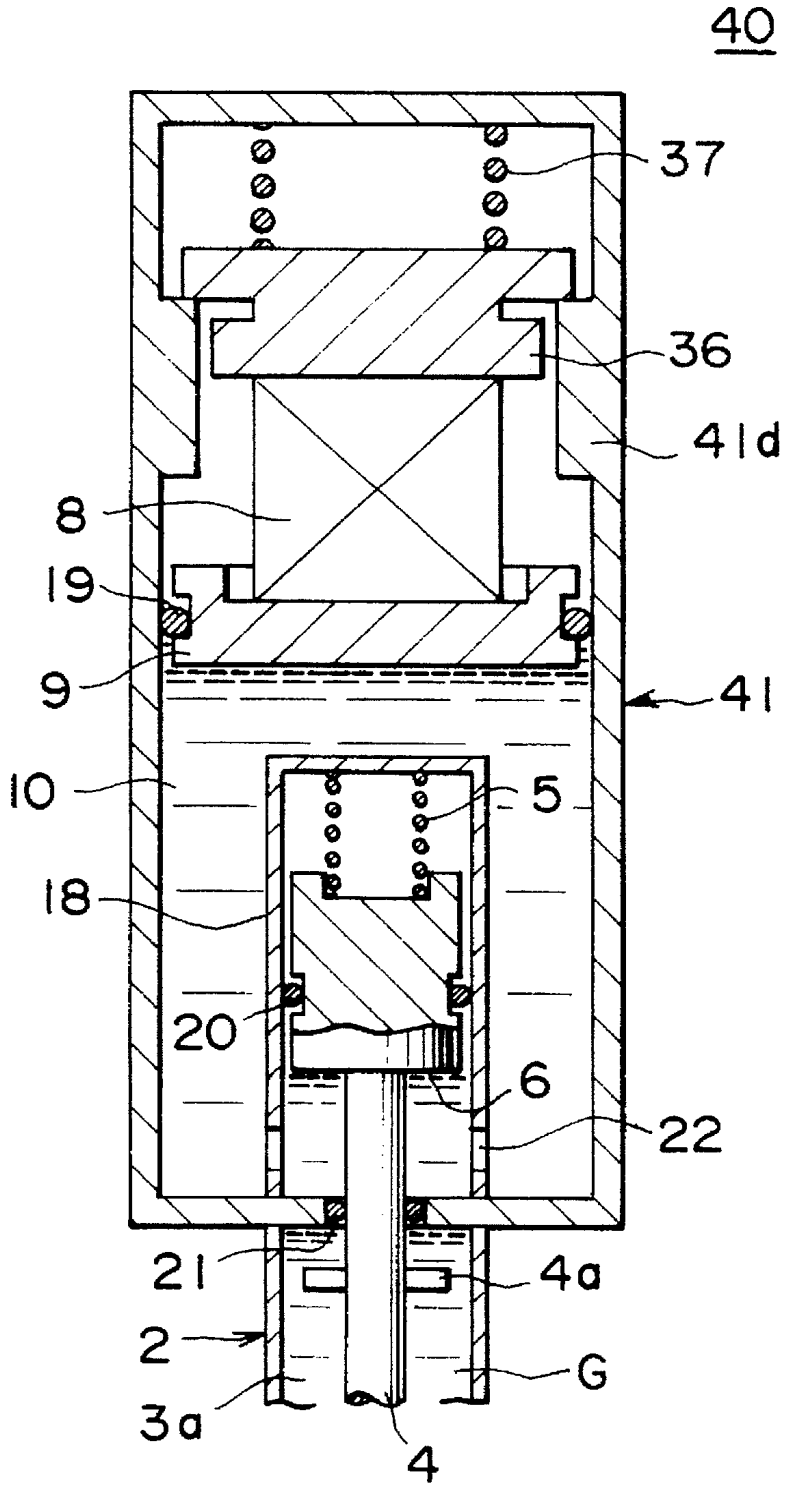

FIG. 15

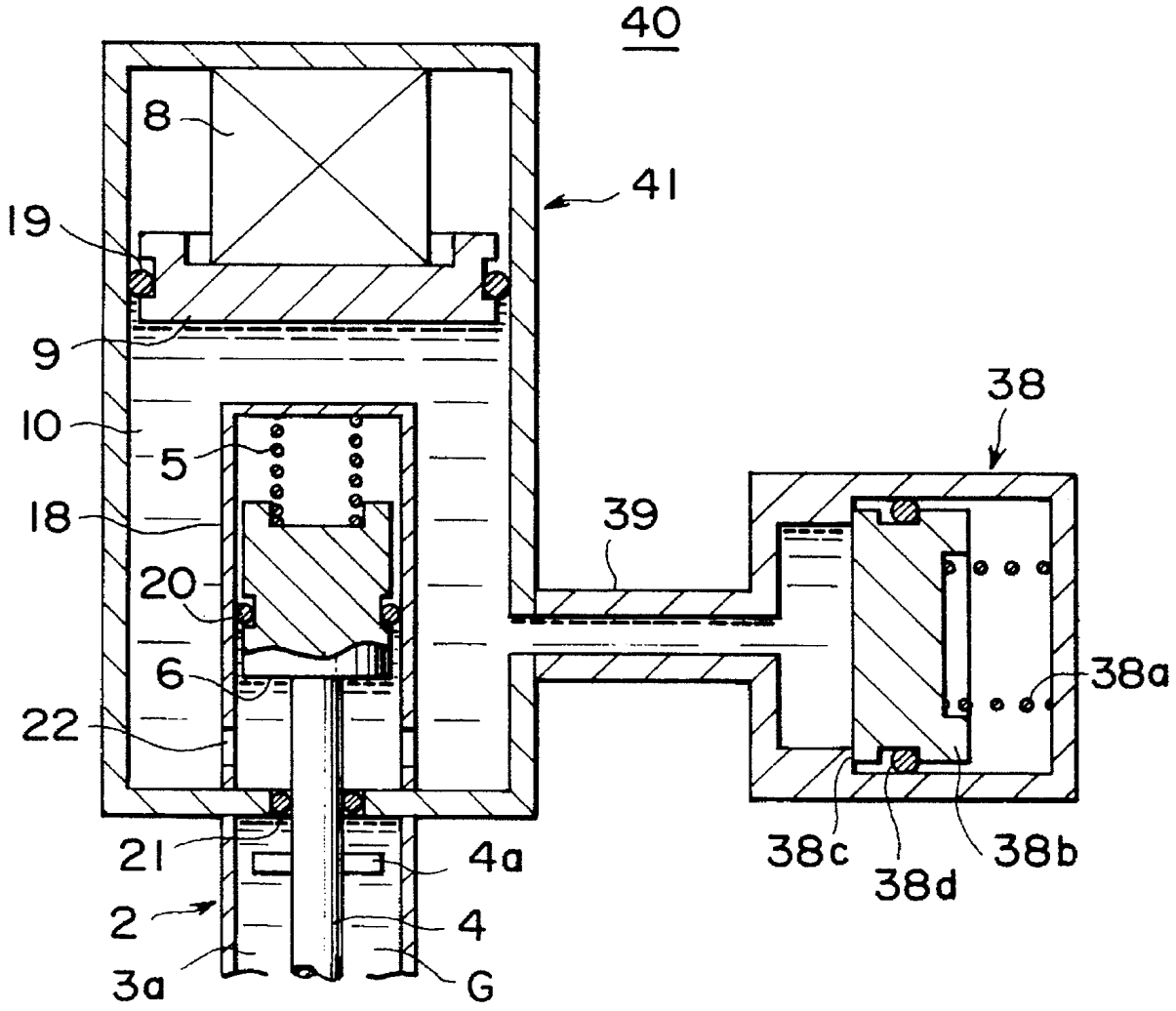

FIG. 16
PRIOR ART

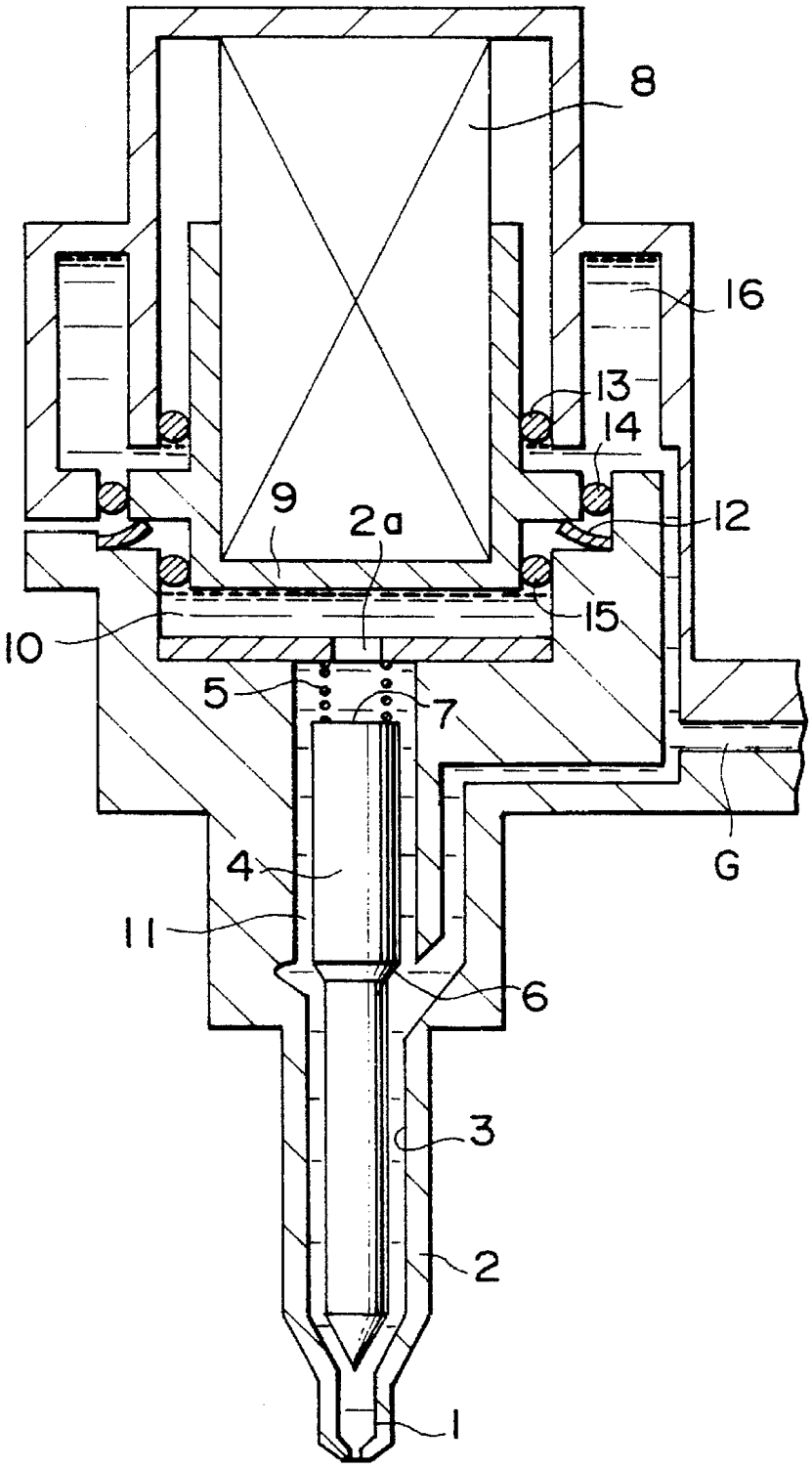

FUEL INJECTION SYSTEM

BACKGROUND OF THE INVENTION

1. Field of the Invention

The present invention relates to a fuel injection system of, for example, an internal-combustion engine.

2. Description of the Related Art

FIG. **16** is the longitudinal sectional view of a conventional fuel injection system disclosed in Japanese Patent Laid-Open No. 1-187363.

In the figure, a injection aperture **1** is provided at the distal end of a valve main body **2**, the injection aperture **1** being communicated with a needle guide cavity **3** formed at the axial center of the valve main body **2**. A needle valve is inserted in the needle guide cavity **3** in such a manner that it is allowed to move in the direction of the axis of the valve main body **2**. The needle valve **4** is pressed toward the injection aperture **1** by the urging force of a compression spring **5** when no fuel G is present in the needle guide cavity **3**, so that the distal end thereof engages with the injection aperture **1** to close the injection aperture **1**, Thus keeping the valve in a closed state. Further, an opening pressure receiving section **6** which receives valve opening pressure of fuel G in the needle guide cavity **3** is provided on the side of the injection aperture **1** of the needle valve **4**; a closing pressure receiving section **7** which receives valve closing pressure of fuel G is provided in a position opposite from the injection aperture **1** of the needle valve **4**. Thus, with fuel G present in the needle guide cavity **3**, a difference in pressure of fuel G applied to the opening pressure receiving section **6** and the closing pressure receiving section **7** causes the needle valve **4** to move in the needle guide cavity **3** toward the injection aperture **1** or away from the injection aperture **1**, so that the distal end of the needle valve **4** closes or opens the injection aperture **1**, thereby closing or opening the valve. A clearance **11** provided between the opening pressure receiving section **6** and the closing pressure receiving section **7** and between the needle guide cavity **3** and the needle valve **4** is formed to be narrow so as to allow only minimal fuel G to flow through.

A pressure control chamber **10** defined by seals **15**, the valve main body **2**, and a piston **9** is communicated with the needle guide cavity **3** through an aperture **2***a*. A piezoelectric element **8**, which is expanded and contracted by a charging/discharging drive circuit (not shown), is provided at the rear of the piston **9**. A disc spring **12** is provided so as to urge the piston **9** in a direction for contracting the piezoelectric element **8**. A high-pressure fuel chamber **16**, which is defined by seals **13** and **14**, is provided at the rear of the piston **9**. Fuel G supplied from a high-pressure fuel source (not shown) is led into the needle guide cavity **3** and the high-pressure fuel chamber **16**.

The operation of the conventional fuel injection system will now be described.

First, fuel G is led into the needle guide cavity **3** and the high-pressure fuel chamber **16**. When the charges accumulated in the piezoelectric element **8** are discharged by a driving circuit, the piezoelectric element **8** contracts. This causes the piston **9** to be pushed up by the urging force of the disc spring **12**, leading to an increase in the capacity of the pressure control chamber **10**. As a result, the pressure of fuel G in the pressure control chamber **10** decreases; the decreased pressure of fuel G is applied to the closing pressure receiving section **7** of the needle valve **4** through the aperture **2***a*. On the other hand, the opening pressure receiving section **6** of the needle valve **4** is subjected to the pressure of fuel G which is supplied from the high-pressure fuel source and which is maintained at a high level. Hence, the pressure applied to the opening pressure receiving section **6** grows higher than that applied to the closing pressure receiving section **7**, causing the needle valve **4** to overcome the urging force of the compression spring **5** and move up. The injection aperture **1** is then opened to communicate with the needle guide cavity **3**, thereby injecting fuel G through the injection aperture **1**.

While the valve is open, fuel G gradually flows from the opening pressure receiving section **6** side into the pressure control chamber **10** through the narrow clearance **11** between the needle valve **4** and the needle guide cavity **3**, causing the pressure in the pressure control chamber **10** and the pressure applied to the closing pressure receiving section **7** to approach the level of the pressure applied to the opening pressure receiving section **6**. At this time, the urging force of the disc spring **12** and the compression spring **5** and also the passage area of the clearance **11** between the needle valve **4** and the needle guide cavity **3** are controlled so that the valve stays open during the injection of fuel G.

Then, when the piezoelectric element **8** is charged by the driving circuit, the piezoelectric element **8** expands, causing the piston **9** to overcome the urging force of the disc spring **12** and accordingly move down, leading to a decreased capacity of the pressure control chamber **10**. As a result, the pressure of fuel G in the pressure control chamber **10** goes up; the increased pressure of fuel G and the urging force of the compression spring **5** are applied to the closing pressure receiving section **7** of the needle valve **4**. On the other hand, the opening pressure receiving section **6** of the needle valve **4** is subjected to the pressure of fuel G which is supplied from the high-pressure fuel source and which is maintained at a constant level. Hence, the pressure applied to the opening pressure receiving section **6** becomes lower than that applied to the closing pressure receiving section **7**, causing the needle valve **4** to come down. The injection aperture **1** is closed and the communication between the injection aperture **1** and the needle guide cavity **3** is cut off, thereby stopping the injection of fuel G through the injection aperture **1**.

During the operation described above, the pressure of fuel G, which is supplied from the high-pressure fuel source and which is applied to the piston **9** from the pressure control chamber **10**, is almost offset by the pressure of fuel G which is supplied from the high-pressure fuel source and which is applied to the piston **9** from the high-pressure fuel chamber **16**.

In most internal-combustion engines, the temperature changes during operation. For example, the ambient temperature of an automotive internal- combustion engine may be −30° C. or below at the time of starting in a cold district while on the other hand it may rise as high as 50° C. to 200° C. during continuous operation. Fuel G is not an oil produced for hydraulic control; the component proportion of fuel G may vary each time the fuel is supplied. Hence, no stable pressure transferring characteristic is ensured over a wide range of temperature. Taking, for example, gasoline which is extensively used as the fuel for an internal-combustion engine, there is a danger of partially evaporating at a section near the needle valve **4**, where the flow velocity increases, in a fuel injection system especially at high temperature because of the evaporation-prone characteristic thereof.

As stated above, since the conventional fuel injection system has the pressure control chamber **10** communicated

with the needle guide cavity **3** on the injection aperture **1** side, fuel G is employed as a pressure transmitting medium which is charged in the pressure control chamber **10** to transfer the driving force of the piezoelectric element **8** to the needle valve **4**. As a result, a problem was presented in that the pressure transmitting characteristic changes and the valve opening/closing duration heavily depends on temperature due to the temperature characteristic of fuel G stated above, preventing accurate fuel injection control.

There was another problem; bubbles generated in fuel G move close to the opening pressure receiving section **6** and temporarily decrease the pressure around the opening pressure receiving section **6**, preventing the opening of the valve. This results in poor fuel metering accuracy and in high toxic component content of the exhaust gas of an internal-combustion engine.

There was a conceivable method wherein the needle valve is directly driven without going through a liquid such as fuel G. This method, however, had a shortcoming in that the piezoelectric element is directly subjected to the force applied to the needle valve, leading to lower durability thereof.

SUMMARY OF THE INVENTION

This invention has been made with a view toward solving the above problems. It is an object of the present invention to provide a fuel injection system which permits the use of hydraulic control oil as a pressure transmitting medium for transmitting the driving force of a piezoelectric element to a needle valve, minimizes the influences exerted by temperature changes in the operating environment of an internal-combustion engine, and prevents bubbles generated in fuel from affecting fuel injection, thus enabling accurate fuel injection control.

To this end, according to one aspect of the present invention, there is provided a fuel injection system equipped with a valve main body, which has a needle guide cavity with the distal end thereof formed as a injection aperture, fuel passing through the needle guide cavity to be injected through the injection aperture; a pressure control chamber filled with a pressure transmitting medium; a piston for changing the fluid pressure of the pressure transmitting medium in the pressure control chamber; a needle valve having one end thereof located in the needle guide cavity and the other end thereof located in the pressure control chamber, the needle valve being installed in such a manner that it is allowed to move to open or close the injection aperture; a pressure receiving section which is provided on a portion of the needle valve located in the pressure control chamber and which is subjected to the fluid pressure; a pre-loading means for pre-loading the needle valve in a direction for closing the injection aperture; and a piezoelectric element which is changed the fluid pressure of the pressure transmitting medium by driving the piston, is applied the changed fluid pressure to the pressure receiving section, and is moved the needle valve in a direction for opening or closing the injection aperture so as to start or stop the injection of the fuel through the injection aperture; and wherein a flowing channel for the fuel is airtightly independent from the pressure control chamber.

BRIEF DESCRIPTION OF THE DRAWINGS

FIG. **1** is a longitudinal sectional view illustrative of a fuel injection system according to a first embodiment of the present invention;

FIG. **2** is a longitudinal sectional view illustrative of a fuel injection system according to a second embodiment of the present invention;

FIG. **3** is a longitudinal sectional view illustrative of a fuel injection system according-to a third embodiment of the present invention;

FIG. **4** is a longitudinal sectional view illustrative of a fuel injection system according to a fourth embodiment of the present invention;

FIG. **5** is a longitudinal sectional view illustrative of a cylinder main body assembly of a fuel injection system according to a fifth embodiment of the present invention;

FIG. **6** is a longitudinal sectional view illustrative of a cylinder main body assembly of a fuel injection system according to a sixth embodiment of the present invention;

FIG. **7** is a longitudinal sectional view illustrative of a fuel injection system according to a seventh embodiment of the present invention;

FIGS. **8A** to **8C** are operation charts illustrative of the opening and closing operation of a needle valve in a fuel injection system;

FIG. **9** is a longitudinal sectional view illustrative of a cylinder assembly of a fuel injection system according to an eighth embodiment of the present invention;

FIG. **10** is a longitudinal sectional view illustrative of a cylinder assembly of a fuel injection system according to a ninth embodiment of the present invention;

FIG. **11** is a longitudinal sectional view illustrative of a cylinder assembly of a fuel injection system according to a tenth embodiment of the present invention;

FIG. **12** is a longitudinal sectional view illustrative of a cylinder assembly of a fuel injection system according to an eleventh embodiment of the present invention;

FIGS. **13A** and **13B** illustrate the operation of a piezoelectric element in a fuel injection system according to a twelfth embodiment of the present invention;

FIG. **14** is a longitudinal sectional view illustrative of a cylinder main body assembly of a fuel injection system according to a thirteenth embodiment of the present invention;

FIG. **15** is a longitudinal sectional view illustrative of a cylinder main body assembly of a fuel injection system according to a fourteenth embodiment of the present invention; and

FIG. **16** is a longitudinal sectional view illustrative of a conventional fuel injection system.

DETAILED DESCRIPTION OF THE PREFERRED EMBODIMENTS

The embodiments of the present invention will now be described in conjunction with the accompanying drawings.

[First Embodiment]

FIG. **1** is the longitudinal sectional view illustrative of a fuel injection system according to the first embodiment of the present invention. In the figure, the identical or corresponding parts to those of the conventional fuel injection system shown in FIG. **16** are given the same reference numerals, and the explanation thereof will be omitted.

A housing **40** of the fuel injection system shown in the FIG. **1** is constituted by a valve main body **2** and a cylinder main body **41**, the valve main body **2** having a needle guide cavity **3** formed at the axial center thereof. The needle guide cavity **3** has an injection aperture **1** formed at the distal end thereof; the rear end is formed to have a large diameter to form a fuel chamber **3***a*. Fuel G is led from a high-pressure fuel source (not shown) into the fuel chamber **3***a* via a fuel passage **17**.

In the cylinder main body **41**, a piston **9** is disposed in such a manner that it is allowed to slide up and down in the drawing, a pressure control chamber **10** being defined by the piston **9**. The pressure control chamber **10** is filled with a pressure transmitting medium. A piezoelectric element **8** for driving the piston **9** is disposed in the cylinder main body **41**. A seal **19** on the piezoelectric side is provided between the outer periphery of the piston **9** and the inner wall surface of the cylinder main body **41** so as to prevent the pressure transmitting medium from flowing into the piezoelectric element **8** side from the pressure control chamber **10**.

Provided inside the pressure control chamber **10** is a cylinder **18** which serves as a housing chamber. A side wall of the cylinder **18** has an inflow/outflow hole **22**, the pressure transmitting medium moving into and out of the cylinder **18** through the inflow/outflow hole **22**.

The needle valve **4** extends beyond the bottom of the cylinder main body **41**; it is installed so that the distal end thereof is allowed to move in the direction for opening or closing the injection aperture **1**. At this time, one end of the needle valve **4** is located in the needle guide cavity **3** and the other end is located in the cylinder **18**. Provided on the other end of the needle valve **4** is an opening pressure receiving section **6** which serves as the pressure receiving section. A compression spring **5**, which functions as the pre-loading means, is provided between the cylinder **18** and the other end surface of the needle valve **4** in a compressed state, urging the needle valve **4** in the direction for closing the injection aperture **1**. Further, a stopper **4***a* is provided on the portion of the needle valve **4** located in a fuel chamber **3***a*, so that, when the needle valve **4** moves in the direction for opening the injection aperture **1**, the stopper **4***a* comes in contact with the cylinder main body **41** to regulate the stroke of the needle valve **4**.

A pressure receiving seal **20** is provided between the outer periphery of the opening pressure receiving section **6** of the needle valve **4** and the inner wall surface of the cylinder **18** so as to prevent the pressure transmitting medium from flowing into the compression spring **5** side, thereby maintaining the pressure difference between the areas above and below the opening pressure receiving section **6**. A fuel chamber seal **21** is provided at the portion where the needle valve **4** comes through the cylinder main body **41** in order to airtightly separate the pressure control chamber **10** from the flowing channel of fuel G.

The operation of the first embodiment will now be discussed.

When a driving circuit applies voltage to the piezoelectric element **8** until it is charged, the piezoelectric element **8** expands. The expansion of the piezoelectric element **8** causes the piston **9** to move down, decreasing the capacity in the pressure control chamber **10** with a resultant increase in the fluid pressure of the pressure transmitting medium. Then, the pressure transmitting medium in the pressure control chamber **10** flows into the cylinder **18** through the inflow/outflow hole **22**, thereby increasing the fluid pressure applied to the opening pressure receiving section **6**. The moment the fluid pressure applied to the opening pressure receiving section **6** surpasses the urging force of the compression spring **5**, the needle valve **4** moves in a direction for opening the injection aperture **1**, thus opening the injection aperture **1**. This allows fuel G, which is supplied from the high-pressure fuel source via a fuel passage **17**, to pass through the fuel chamber **3***a* and the needle guide cavity **3** to be injected through the injection aperture **1**. The needle valve **4** moves until the stopper **4***a* comes in contact with the cylinder main body **41** to restrict the stroke thereof.

Conversely, when the voltage applied to the piezoelectric element **8** is decreased until it is discharged, the piezoelectric element **8** contracts. The contraction of the piezoelectric element **8** causes the piston **9** to move up, increasing the capacity in the pressure control chamber **10** with a resultant decrease in the fluid pressure of the pressure transmitting medium. Then, the pressure transmitting medium in the cylinder **18** flows out into the pressure control chamber **10** through the inflow/outflow hole **22**, thereby decreasing the fluid pressure applied to the opening pressure receiving section **6**. The moment the fluid pressure applied to the opening pressure receiving section **6** is surpassed by the urging force of the compression spring **5**, the needle valve **4** moves in a direction for closing the injection aperture **1** and the distal end thereof comes in contact with the nozzle, thus closing the injection aperture **1** to stop the injection of fuel G.

According to the first embodiment, the fuel chamber seal **21** provides airtight separation of the pressure control chamber **10** from the flowing channel of fuel G. Hence, the pressure transmitting medium in the pressure control chamber **10** and fuel G are not mixed together, permitting unrestrained selection of pressure transmitting medium. Thus, the use of a liquid, which exhibits a better temperature characteristic than that of fuel G, as the pressure transmitting medium, makes it possible to obtain a pressure transmitting characteristic which is stable over a wide temperature range and also to protect the pressure transmitting characteristic from being affected by partially evaporated fuel G in the fuel injection system, thereby achieving stable valve opening and closing performance regardless of operating environment.

The pressure transmitting medium is required to have a low saturated vapor pressure even under high temperature to control the generation of bubbles. Further, the medium provides lubrication for the needle valve **4** to move as well as it transfers pressure; therefore, the medium is also required to exhibit stable lubricating property for the needle valve **4** to move smoothly, i.e., stable viscosity coefficient against temperature changes. For these reasons, the liquid used for the pressure transmitting medium should be a lubricant such as engine oil and gear oil or hydraulic oil for a hydraulic circuit which do not reach the saturated vapor pressure at 200° C. and atmospheric pressure to survive the operating temperature of the internal-combustion engine and which have good lubricating property.

By employing the engine oil, gear oil, or the hydraulic oil for a hydraulic circuit, the occurrence of bubbles in the pressure transmitting medium filled in the pressure control chamber **10** can be prevented and therefore the deterioration in the pressure transmitting characteristic can be prevented even when, for example, the ambient temperature reaches 150° C. to 200° C. from continuous operation in an automotive internal-combustion engine. Moreover, an increase in the viscosity coefficient of the pressure transmitting medium can be controlled and the lubricating property can be maintained to ensure smooth operation of the piston **9** and the needle valve **4** even if the ambient temperature goes down to −30° C. or less at the time of startup in a cold region.

[Second Embodiment]

FIG. **2** is the longitudinal sectional view illustrative of the fuel injection system according to the second embodiment of the present invention.

In the figure, the piezoelectric element **8** is configured to be a disc or a column with a throughhole provided at the center thereof. The piezoelectric element **8** is provided on the bottom side of the cylinder main body **41**, the needle

valve **4** coming through the through-hole of the piezoelectric element **8**. Provided on the piezoelectric element **8** in the cylinder main body **41** is the piston **9** which is disposed in such a manner that it is allowed to slide up and down. The piston **9** has a hole at the center thereof, the needle valve **4** coming through the hole. Seals **19** on the piezoelectric side are provided, one each on the outer periphery of the piston **9** and the inner circumference of the hole so as to prevent the pressure transmitting medium from flowing into the piezoelectric element **8** side.

Provided in the upper section inside the cylinder main body **41** is a cylinder **18**. The other end of the needle valve **4** is located in the cylinder **18**. Further, a compression spring **5** is provided between the cylinder **18** and the other end surface of the needle valve **4** in a compressed state, urging the needle valve **4** in the direction for closing the injection aperture **1**. A pressure receiving seal **20** is provided on the outer periphery of the opening pressure receiving section **6** of the needle valve **4** to prevent the pressure transmitting medium from flowing to the rear of the opening pressure receiving section **6** of the needle valve **4**. The rear of the opening pressure receiving section **6** where the compression spring **5** of the cylinder **18** is disposed is opened to the air through an opened-to-the-air aperture **23**. The pressure control chamber **10** is defined by the piston **9** and the opening pressure receiving section **6** of the needle valve **4**.

The rest of the construction of this embodiment is identical to the structure of the first embodiment described previously; the operation is also the same as that of the first embodiment.

According to the second embodiment thus constructed, the same advantages as those of the first embodiment stated above can be obtained. Furthermore, the length of the housing **40** can be reduced since the disc-shaped or column-shaped piezoelectric element **8** with the through-hole at the center thereof is located at the bottom in the cylinder main body **41** with the needle valve **4** coming through the through-hole of the piezoelectric element **8**; therefore, the completed fuel injection system can be made smaller. In addition, since the rear of the opening pressure receiving section **6**, where the compression spring **5** is disposed, is opened to the air via the opened-to-the-air aperture **23**, the pressure applied to the rear surface of the opening pressure receiving section **6** can be maintained at a constant level even if the pressure transmitting medium leaks through the pressure receiving seal **20**.

[Third Embodiment]

FIG. **3** is the longitudinal sectional view illustrative of the fuel injection system according to the third embodiment of the present invention.

In the figure, the cylinder **18** is configured by a cylindrical partition installed on the top inner surface of the cylinder main body **41**. The other end of the needle valve **4** is located in the cylinder **18**. Further, the disc-shaped or column-shaped piezoelectric element **8** with a through-hole in the center thereof is disposed aroung the cylinder **18** at the top inside the cylinder main body **41**. The piston **9** with a hole formed at the center thereof is disposed on the bottom of the piezoelectric element **8**. Seals **19** on the piezoelectric side are provided, one each on the outer periphery of the piston **9** and the inner circumference of the hole of the piston **9**. A pressure receiving seal **20** is provided on the outer periphery of the opening pressure receiving section **6** of the needle valve **4**. The rear of the opening pressure receiving section **6**, where the compression spring **5** of the cylinder **18** is disposed, is opened to the air through the opened-to-the-air aperture **23**. The pressure control chamber **10** is defined by the piston **9** and the opening pressure receiving section **6** of the needle valve **4**.

The rest of the construction of this embodiment is identical to the structure of the second embodiment described previously; the operation is also the same as that of the second embodiment.

According to the third embodiment thus constructed, the same advantages as those of the second embodiment stated above can be obtained. Furthermore, the disc-shaped or column-shaped piezoelectric element **8** with the through-hole at the center thereof is located at the top in the cylinder main body **41**, the cylinder **18** being housed in the through-hole of the piezoelectric element **8**; therefore, the length of the housing **40** can be further reduced, allowing the completed fuel injection system to be made even smaller.

[Fourth Embodiment]

FIG. **4** is the longitudinal sectional view of the fuel injection system according to the fourth embodiment of the present invention.

In the figure, the cylinder main body **41** is constituted by a first cylinder main body **41*a*** and a second cylinder main body **41*b***. The first cylinder main body **41*a*** incorporates the piezoelectric element **8** and the piston **9**; the second cylinder main body **41*b*** contains the other end of the needle valve **4**. Further, a first pressure control chamber **10*a*** defined by the piston **9** and a second pressure control chamber **10*b*** defined by the opening pressure receiving section **6** of the needle valve **4** are communicated through a pressure transmitting pipe **24**. The rear of the opening pressure receiving section **6**, where the compression spring **5** of the second cylinder main body **41*b*** is disposed, is opened to the air through the opened-to-the-air aperture **23**.

The rest of the construction of this embodiment is identical to the structure of the first embodiment described previously.

In the fourth embodiment, the piston **9** is driven by the piezoelectric element **8** to change the capacity inside the first pressure control chamber **10*a***. A change in the fluid pressure of the pressure transmitting medium in the first pressure control chamber **10*a*** is transferred to the second pressure control chamber **10*b*** via the pressure transmitting pipe **24** and it is applied to the opening pressure receiving section **6** of the needle valve **4**. The change in the fluid pressure applied to the opening pressure receiving section **6** causes the needle valve **4** to move in the direction for closing or opening the injection aperture **1**. The rest of the operation is the same as the operation in the first embodiment described previously.

According to the fourth embodiment thus constructed, the same advantages as those of the first embodiment previously stated are obtained. Furthermore, since the pressure control chamber **10** is divided into the first and second pressure control chambers **10*a*** and **10*b***, respectively, the degree of freedom of the layout of the fuel injection system can be increased.

[Fifth Embodiment]

FIG. **5** is the longitudinal sectional view illustrative of the cylinder main body assembly of a fuel injection system according to the fifth embodiment of the present invention.

In the figure, a rubber body **25** made of, for example, silicone rubber, has a disc-shaped flange **25*a*** and a cylindrical fitting section **25*b*** which is provided at the center of the flange **25*a***. The rubber body **25** is fixed, with an adhesive agent **25*c***, to the shaft of the needle valve **4** which is fitted in the central hole of the fitting section **25*b***. The rubber body **25** is disposed so that the fitting section **25*b*** is fitted in an opening **41*c*** provided in the bottom of the cylinder main

body **41**, a holding frame **26** being applied to the rubber body **25** from the bottom being tightened and fixed to the bottom of the cylinder main body **41**. At this time, the flange **25***a* of the rubber body **25** is pressed and compressed by the cylinder main body **41** and the holding frame **26** so as to provide airtight isolation of the pressure control chamber **10** from the flowing channel of fuel G.

The rest of the construction-is the same as the construction of the first embodiment stated above.

In the fifth embodiment, when the piston **9** is driven by the piezoelectric element **8**, the fluid pressure of the pressure transmitting medium applied to the opening pressure receiving section **6** of the needle valve **4** changes and the needle valve **4** moves in the direction for closing or opening the injection aperture **1** as in the case of the first embodiment discussed above. In the fifth embodiment, the rubber body **25** is elastically deformed in the direction of the movement of the needle valve **4** by the driving force which moves the needle valve **4** up or down, thereby permitting the opening and closing operation of the needle valve **4**. The adhesive agent **25***c* fixes the fitting section **25***b* of the rubber body **25** to the needle valve **4** and the flange **25***a* of the rubber body **25** is pressurized and compressed by the cylinder main body **41** and the holding frame **26**; therefore, the pressure transmitting medium does not leak into the fuel chamber **3***a*.

The rest of the operation is the same as the operation of the first embodiment.

According to the fifth embodiment thus constructed, the same advantages as those of the first embodiment discussed above can be obtained. In addition, the pressure transmitting medium does not leak into the fuel chamber **3***a* since the pressure control chamber **10** is securely separated from the fuel chamber **3***a* in an airtight manner. Hence, a constant amount of the pressure transmitting medium in the pressure control chamber **10** is maintained and the pre-loading can be maintained, enabling reliable valving operation.

In the fifth embodiment described above, the flange **25***a* of the rubber body **25** is pressurized and compressed by the cylinder main body **41** and the holding frame **26**; alternatively, an adhesive agent may be used to glue the flange **25***a*, the cylinder main body **41**, and the holding frame **26** together to fix them. This will provide even more secure airtight isolation of the pressure control chamber **10** from the fuel chamber **3***a*.

[Sixth Embodiment]

FIG. **6** is the longitudinal sectional view illustrative of the cylinder main body assembly of a fuel injection system according to the sixth embodiment of the present invention.

In the figure, a liquid amount regulator **27**, which controls the amount of the pressure transmitting medium in the pressure control chamber **10**, is provided at the bottom of the cylinder main body **41**. The liquid amount regulator **27** is constituted by a liquid chamber **27***a* provided at the bottom of the cylinder main body **41**, a liquid reservoir **27***b* having an air hole **27***d* for releasing to the air, and a liquid channel **27***c* which communicates the liquid chamber **27***a* and the liquid reservoir **27***b*. The liquid amount regulator **27** is filled with the pressure transmitting medium. Further, a liquid seal **27***e* is provided at a portion of the liquid chamber **27***a* where the needle valve **4** comes through.

The rest of the construction is the same as the construction of the first embodiment described above.

In the sixth embodiment, when the needle valve **4** moves to open the injection aperture **1**, the piezoelectric element **8** drives the piston **9** and the capacity of the pressure control chamber **10** decreases, causing the pressure of the pressure transmitting medium to increase. At this time, if the fuel chamber seal **21** is defective, the pressure transmitting medium leaks out through the fuel chamber seal **21**. This gives rise to a problem in that the volume of the pressure transmitting medium decreases, causing a change in the pressure transmitting characteristic of the pressure control chamber **10**

A fuel injection system is not in operation at all times; the engine is stopped for a considerable period of time in the case of a car, for example. If the amount of the pressure transmitting medium in the pressure control chamber **10** has been decreased, then the fluid pressure in the pressure control chamber **10** goes down and becomes lower than the fluid pressure in the liquid chamber **27***a*. Hence, while the engine is in a stopped state, according to the difference in fluid pressure between the pressure control chamber **10** and the liquid chamber **27***a*, the pressure transmitting medium flows into the pressure control chamber **10** from the liquid chamber **27***a* through the fuel chamber seal **21**, thus controlling the pressure transmitting medium in the pressure control chamber **10** to a predetermined amount.

According to the sixth embodiment thus constructed, the same advantages as those of the first embodiment described previously will be obtained. In addition, since the pressure transmitting medium in the pressure control chamber **10** is controlled to a predetermined amount, time-dependent changes of the pressure transmitting characteristic of the pressure control chamber **10** can be prevented, enabling stable valve opening and closing operation.

[Seventh Embodiment]

FIG. **7** is the longitudinal sectional view illustrative of a fuel injection system according to the seventh embodiment of the present invention.

In the figure, provided in the cylinder **18** is a partitioning plate **28** which provides a partition between the area on the opening pressure receiving section **6** side and the area on the inflow/outflow hole **22** side with respect to the needle valve **4**. A cylinder sub-chamber **29** defined by the opening pressure receiving section **6** and the partitioning plate **28** is provided. A small orifice **30** is formed in the partitioning plate **28**, the cross-sectional area of the small orifice **30** being set so that the cross-sectional area of the small orifice **30**<< the cross-sectional area of the inflow/outflow hole **22**. As the pressure transmitting medium, engine oil or other liquid which has higher viscosity than fuel G and which exhibits a minimum of temperature-dependent change in the characteristic.

The rest of the construction of this embodiment is the same as the construction of the first embodiment described above.

In the seventh embodiment, when the piston **9** is driven by the piezoelectric element **8**, the capacity of the pressure control chamber **10** changes and the fluid pressure of the pressure transmitting medium changes accordingly as in the case of the first embodiment discussed above. Further, the fluid pressure of the pressure transmitting medium applied to the opening pressure receiving section **6** of the needle valve **4** changes to open or close the needle valve **4**.

In the operation stated above, the pressure transmitting medium passes through the small orifice **30** and flows into the cylinder sub-chamber **29** or flows out of the cylinder sub-chamber **29**. At this time, since the viscosity of the pressure transmitting medium is high, resistance, which is proportional to the moving velocity of the needle valve **4**, is produced when the pressure transmitting medium passes through the small orifice **30**. This results in a reduced colliding force of the stopper **4***a* of the needle valve **4** against the cylinder main body **41** at the time of opening and a

reduced colliding force of the distal end of the needle valve **4** against the nozzle at the time of closing. The reduced colliding forces lead to a reduction in the repelling forces of the cylinder main body **41** and the nozzle applied to the needle valve **4**.

According to the seventh embodiment thus construction, resistance, which is proportional to the moving velocity of the needle valve **4**, is produced when the pressure transmitting medium passes through the small orifice **30**. This reduces the colliding force of the stopper **4***a* of the needle valve **4** against the cylinder main body **41** at the time of opening and also the colliding force of the distal end of the needle valve **4** against the nozzle at the time of closing. The reduced colliding forces prevent parts from being damaged, resulting in a prolonged service life of the fuel injection system.

Furthermore, the reduced colliding force also leads to reduced repelling force. This solves the problem of the undesirable nonlinear relationship between a set valve opening period of time and an actual valve opening time of period. To be more precisely about the problem of the undesirable nonlinear relationship, when the valve opening period of time is set so that the closing operation is initiated immediately after the collision, the actual valve opening period of time is shorter than when the valve opening period of time is set so that the closing operation is initiated immediately before the collision because of the repulsion to the collision.

Moreover, the leakage of fuel G after the valve is closed, which is caused by the repulsion to the collision at the time of closing, is controlled, permitting highly accurate control of the injecting amount of fuel G.

In addition, since the temperature-dependent changes in the characteristics of the pressure transmitting medium, i.e., the changes in viscosity, is minimized, the colliding force can be reduced regardless of temperature changes. Thus, the advantages described above can be obtained over a wide range of temperature.

With reference to FIGS. **8**A to **8**C, detailed description will now be given to the undesirable nonlinear relationship between a set valve opening period of time and an actual valve opening period of time and the leakage of fuel G after closing the valve caused by the repulsion provoked by the collision taken place at the time of valve closing. FIGS. **8**A to **8**C show the displacement of the needle valve observed when the valve is opened and closed, the axis of ordinate representing the displacement of the needle valve **4** and the axis of abscissa representing time. Set valve opening period of time T_1 denotes the duration in which electric current is allowed to flow through the piezoelectric element **8** to open the injection aperture **1**; actual valve opening period of time T_2 denotes the duration in which the injection aperture **1** actually stays open. Further, S denotes the position of the stopper **4***a*.

Referring to FIG. **8**A, the case, wherein set valve opening period of time T_1 is sufficiently long, will be described.

Electric current is supplied to the piezoelectric element **8** until time t_2 to open the injection aperture **1**. This causes the needle valve **4** to be displaced in the opening direction and the stopper **4***a* collides with the cylinder main body **41** in time t_1. At this time, the cylinder main body **41** applies a repelling force to the stopper **4***a* and the needle valve **4** is displaced in the closing direction. The needle valve **4** is, however, under the driving force for opening it; therefore, the needle valve **4** is displaced in the opening direction again. Then, the colliding force exerted by the stopper **4***a* on the cylinder main body **41** gradually weakens and the bounce of the needle valve **4** is attenuated until the stopper **4***a* comes in contact with the cylinder main body

In time t_2, the supply of electric current to the piezoelectric element **8** is stopped. This causes the needle valve **4** to be displaced in the closing direction; in time t_3, the distal end of the needle valve **4** collides with the nozzle. At the time of this collision, the nozzle exerts a repelling force on the needle valve **4** to displace the needle valve **4** in the opening direction. The needle valve **4** is, however, under the driving force for opening it; therefore, the needle valve **4** is displaced in the closing direction again. Then, the colliding force exerted by the stopper **4***a* on the nozzle gradually weakens and the bounce of the needle valve **4** is attenuated until the distal end of the needle valve **4** closes the injection aperture **1**.

Thus, fuel G is injected through the injection aperture **1** for actual valve opening period of time T_2 ($=t_s$).

Referring to FIG. **8**B, the case, wherein set valve opening period of time T_1 is set so that closing is started immediately following the collision between the stopper **4***a* and the cylinder main body **41**, will now be described.

Electric current is supplied to the piezoelectric element **8** until time t_4 to open the injection aperture **1**. This causes the needle valve **4** to be displaced in the opening direction and the stopper **4***a* collides with the cylinder main body **41** in time t_1. At this time, the cylinder main body **41** applies a repelling force to the stopper **4***a* and the needle valve **4** is displaced in the closing direction. In time t_4, the supply of electric current to the piezoelectric element **8** is stopped. This causes the needle valve **4** to be displaced in the closing direction; in time t_5, the distal end of the needle valve **4** collides with the nozzle. At this time, the needle valve **4** has initial velocity in the closing direction due to the repelling force; therefore, the time required for closing is shorter than that shown in FIG. **8**A. Hence, $t_3-t_2>t_5-t_4$.

Thus, fuel G is injected through the injection aperture **1** for actual valve opening period of time T_2 ($=t_5$).

It should be noted that, when the injection aperture **1** is closed, the needle valve **4** bounds as in the case shown in FIG. **8**A.

Referring to FIG. **8**C, the case, wherein set valve opening period of time T_1 is set so that closing is started immediately preceding the collision between the stopper **4***a* and the cylinder main body **41**, will now be described.

Electric current is supplied to the piezoelectric element **8** until time t_6 to open the injection aperture **1**. This causes the needle valve **4** to be displaced in the opening direction. In time t_6, the supply of electric current to the piezoelectric element **8** is stopped. This causes the needle valve **4** to be displaced in the closing direction; in time t_7, the distal end of the needle valve **4** collides with the nozzle. At this time, the needle valve **4** has initial velocity in the-opening direction due to inertia; therefore, the time required for closing is longer than that shown in FIG. **8**A. Hence, $t_3-t_2>t_7-t_6$.

Thus, fuel G is injected through the injection aperture **1** for actual valve opening period of time T_2 ($=t_7$).

It should be noted that, when the injection aperture **1** is closed, the needle valve **4** bounds as in the case shown in FIG. **8**A.

A fuel injection system controls the injecting amount of fuel G by controlling actual valve opening period of time T_2 by using set valve opening period of time T_1. Specifically, to increase the injecting amount of fuel G, set valve opening period of time T_1 is increased. As described above, however, actual valve opening period of time T_2, which is obtained when valve opening period of time T_1 is set so that the closing operation is begun immediately after the collision

between the stopper **4***a* and the cylinder main body **41**, undesirably becomes shorter than actual valve opening period of time T_2 which is obtained when set valve opening period of time T_1 is set so that the closing operation is begun immediately before the collision between the stopper **4***a* and the cylinder main body **41**. In other words, set valve opening period of time T_1 and the actual valve opening period of time T_2 are inverted, presenting nonlinear relationship between the two.

Further, the repelling force generated by the collision of the distal end of the needle valve **4** against the nozzle causes the needle valve **4** to bound. Therefore, after the closing operation, the injection aperture **1** is opened due to the bounce of the needle valve **4**, resulting in the leakage of fuel G.

According to the seventh embodiment, the colliding force of the stopper **4***a* of the needle valve **4** applied to the cylinder main body **41** at the time of opening decreases; therefore, the repelling force of the cylinder main body **41** applied to the stopper **4***a* at the time of the collision accordingly reduces. Thus, if valve opening period of time T_1 is set so that the closing operation is begun immediately after the collision between the stopper **4***a* and the cylinder main body **41**, when the supply of electric current to the piezoelectric element **8** is cut off in t_4, a smaller repelling force in the closing direction is applied to the needle valve **4**. As a result, the time required for completing the valve closing operation approaches that shown in FIG. **8**A ($t_3-t_2 \approx t_5-t_4$). Thus, it is possible to avoid the inversion of set valve opening period of time T_1 and actual valve opening period of time T_2.

Further, the colliding force of the distal end of the needle valve **4** applied to the injection aperture **1** at the time of valve closing operation decreases, resulting in a reduced repelling force exerted by the injection aperture **1** on the needle valve **4**. The reduced repelling force leads to less bounce of the needle valve **4** which takes place when the injection aperture **1** is closed, thus making it possible to control the occurrence of the leakage of fuel G after the valve closing operation is completed.

[Eighth Embodiment]

FIG. **9** is the longitudinal sectional view illustrative of the cylinder assembly of a fuel injection system according to the eighth embodiment of the present invention.

In the eighth embodiment, an opening **31** is provided in the side wall of the cylinder **18**. The cross-sectional area of the opening **31** is smaller than that of the inflow/outflow hole **22**, therefore, the opening **31** serves as an orifice. The rest of the construction is the same as the construction of the first embodiment described above.

In the eighth embodiment, when the piston **9** is driven by the piezoelectric element **8**, the pressure transmitting medium flows into the cylinder **18** from the pressure control chamber **10** through the opening **31**, or it flows into the pressure control chamber **10** from the cylinder **18** through the opening **31**. At this time, since the opening **31** has a small cross-sectional area, the opening **31** functions as an orifice, restricting the flow rate of the pressure transmitting medium going through the opening **31**. This causes a delay in the rise or fall of the fluid pressure in the cylinder **18** in relation to the rise or fall of the fluid pressure in the pressure control chamber **10**, thus restraining the moving velocity of the needle valve **4**.

Therefore, the eighth embodiment provides the same advantages as those of the seventh embodiment described above.

[Ninth Embodiment]

FIG. **10** is the longitudinal sectional view illustrative of the cylinder assembly of a fuel injection system according to the ninth embodiment of the present invention.

In the ninth embodiment, in place of the compression spring **5**, a low-resilience rubber **32** is disposed between the cylinder **18** and the other end surface of the needle valve **4**. The low-resilience rubber **32** is preferably made of silicone rubber or other material which exhibits good attenuation characteristic, that is, high resistance to deforming velocity, and which has an impact resilience of **50** or less. The rest of the construction is the same as the construction of the first embodiment discussed above.

According to the ninth embodiment, the low-resilience rubber **32** applies pre-load to the needle valve **4**. When the fluid pressure applied to the opening pressure receiving section **6** of the needle valve **4** goes up, the needle valve **4** moves in the direction for opening the injection aperture **1** and the low-resilience rubber **32** contracts. At this time, the low-resilience rubber **32** develops high resistance, restraining the moving velocity of the needle valve **4**. Thus, the ninth embodiment also provides the same advantages as those of the seventh embodiment described above.

In the ninth embodiment, if the low-resilience rubber **32** is disposed in contact with the other end surface of the needle valve **4**, then there is no need to provide the pressure receiving seal **20**.

[Tenth Embodiment]

In the ninth embodiment above, the low-resilience rubber **32** is employed as the pre-loading means. In the tenth embodiment, as shown in FIG. **11**, a balloon-like rubber **33**, which has air or oil sealed in to allow high deformation, is employed for the pre-loading means to provide the same advantages. While in the ninth embodiment, the spring constant is determined by the disposing space and the material of the low-resilience rubber **32**, in the tenth embodiment, the spring constant can be adjusted by adjusting the pressure of the air or oil to be sealed in. Hence, the tenth embodiment adds another advantage in that a higher degree of freedom of the spring constant with respect to the shape is obtained.

[Eleventh Embodiment]

Instead of the low-resilience rubber **32** used as the pre-loading means in the ninth embodiment, a buffer **34** is employed as the pre-loading means for the eleventh embodiment as illustrated in FIG. **12**. The buffer **34** is made of silicone rubber, for example, and it has a predetermined spring constant. Further, the buffer **34** is designed so that it develops a predetermined attenuation characteristic by the resistance produced when air passes through an opened-to-the-air aperture **35** which is formed in the cylinder **18**. Accordingly, the buffer **34** restrains the moving velocity of the needle valve **4**, enabling the eleventh embodiment to provide the same advantages as those of the seventh embodiment discussed above. The attenuation characteristic is controlled by the cross-sectional area of the opened-to-the-air aperture **35**.

[Twelfth Embodiment]

In the twelfth embodiment, a voltage controlling means is used to reduce a time-dependent change in the driving voltage applied to the piezoelectric element **8** immediately before the completion of the lift of the needle valve **4**.

Conventionally, the waveform of the driving voltage applied to the piezoelectric element **8** at the time of valve opening indicates that the driving voltage is increased from 0 volt to E_0 volts (until time t_1) at a constant step-up rate then the voltage of E_0 volts is maintained as shown by the dashed line of FIG. **13**A. The waveform of the driving voltage at the time of valve closing indicates that the voltage is decreased from the voltage of E_0 volts (from time t_2) to 0 volt at a constant step-down rate. When the driving voltage applied to

the piezoelectric element **8** is controlled in this manner, the piezoelectric element **8** expands in proportion to the driving voltage as indicated by the dashed line of FIG. **13B**; it expands by displacement A, which corresponds to the driving voltage of E_0 volts, in time t_1; it contracts in proportion to the driving voltage from time t_2, then it restores the original dimensions thereof in time t_3.

In the twelfth embodiment, the voltage controlling means is provided with, e.g. a time function so that the gradient of the driving voltage is dulled immediately before the completion of the valve opening and closing operation, thereby the step-up rate of the driving voltage applied to the piezoelectric element **8** is decreased immediately before the completion of the valve opening operation and the step-down rate is also decreased immediately before the completion of the valve closing operation as shown by the waveform indicated by the solid line of FIG. **13A**. This means that the time-dependent change, i.e. the gradient, of the driving voltage is dulled immediately before the completion of the lift of the needle valve **4** as it is shown by the waveform of the driving voltage. Thus, the displacement ratio of the piezoelectric element **8** decreases immediately before the completion of the lift of the needle valve **4** as indicated by the solid line in FIG. **13B**. Accordingly, the change in the fluid pressure of the pressure transmitting medium decreases immediately before the completion of the lift of the needle valve **4** and the moving velocity of the needle valve **4** decreases immediately before the completion of the lift. This results in a reduced colliding force exerted by the stopper **4***a* of the needle valve **4** on the cylinder main body **41** at the time of valve opening and also a reduced colliding force exerted by the distal end of the needle valve **4** on the nozzle at the time of valve closing.

According to the twelfth embodiment, the colliding force exerted by the stopper **4***a* of the needle valve **4** on the cylinder main body **41** at the time of valve opening and the colliding force exerted by the distal end of the needle valve **4** on the nozzle at the time of valve closing can be reduced by dulling the driving voltage applied to the piezoelectric element **8** immediately before the completion of the lift of the needle valve **4** through the controlling means. This makes it possible to obtain the same advantages as those of the seventh embodiment discussed above without adopting any special structure.

[Thirteenth Embodiment]

FIG. **14** is the longitudinal sectional view illustrative of the cylinder main body assembly of a fuel injection system according to the thirteenth embodiment of the present invention.

In the figure, a holding plate **36** is provided on the top of the piezoelectric element **8**. A spring **37** is provided in a compressed state between the holding plate **36** and the top inner surface of the cylinder main body **41**. Provided on the inner surface of the side wall of the cylinder main body **41** is the stopper **41***d* which engages with the outer periphery of the holding plate **36** to prevent the holding plate **36** from moving downward. The holding plate **36**, the spring **37**, and the stopper **41***d* constitute a pressure relaxing means. The rest of the construction is the same as the construction of the first embodiment already described.

The operation of the thirteenth embodiment will now be described.

The holding plate **36** is pushed downward by the urging force of the spring **37**; the outer periphery of the holding plate **36** engages with the stopper **41***d* to prevent the holding plate **36** from moving downward. Downward load Fk is applied to the holding plate **36** by the spring **37**, load Fk being received by the stopper **41***d* via the holding plate **36**.

When the piezoelectric element **8** is expanded to open the injection aperture **1**, upward driving force is applied to the holding plate **36**. Downward load Fk applied to the holding plate **36** is, however, set to be larger than the driving force generated by the piezoelectric element **8**; therefore, the upward movement of the holding plate **36** is prevented. As a result, the driving force generated by the piezoelectric element **8** is applied to the piston **9** and the valve opening operation by the needle valve **4** is implemented.

In this case, if, for some reason, an excess rise takes place in the fluid pressure of the pressure transmitting medium in the pressure control chamber **10**, then the increased fluid pressure pushes up the piston **9**. This force applied to the piston **9** is transmitted to the holding plate **36** via the piezoelectric element **8**. When the force applied to the piston **9** overcomes load Fk, the spring **37** contracts, moving the holding plate **36** upward. This in turn causes the capacity of the pressure control chamber **10** to increase, easing the rise in the fluid pressure of the pressure transmitting medium.

According to the thirteenth embodiment thus constructed, an excessive rise in the fluid pressure of the pressure transmitting medium in the pressure control chamber **10** can be prevented. The piezoelectric element **8** is not subjected to load which exceeds Fk. Therefore, it is possible to protect the piezoelectric element **8** from damage by setting proper load Fk applied by the spring **37** according to the pressure resistance of the piezoelectric element **8**.

[Fourteenth Embodiment]

FIG. **15** is the longitudinal sectional view illustrative of the cylinder main body assembly of a fuel injection system according to the fourteenth embodiment of the present invention.

In the figure, a cylinder chamber **38**, which functions as the pressure relaxing means, is provided so that it is communicated with the pressure control chamber **10** of the cylinder main body **41** via a liquid channel **39**. Provided in the cylinder chamber **38** are a spring **38***a*, which has been set to load Fk, and a piston **38***b*. A stopper **38***c* provided on the inner wall surface of the cylinder chamber **38** prevents the piston **38***b* from moving in one direction. Further, a piston seal **38***d* is provided around the outer periphery of the piston **38***b* to prevent the pressure transmitting medium from flowing to the spring **38***a* side. The rest of the construction is the same as the construction of the first embodiment described above.

In the fourteenth embodiment, the urging force of the spring **38***a* pushes the piston **38***b* toward the stopper **38***c*. Further, the outer periphery of the piston **38***b* engages with the stopper **38***c*, so that the piston **38***b* is not allowed to move toward the stopper **38***c*. The piston **38***b* is subjected to load Fk in the direction of the stopper **38***c* by the spring **38***a*, load Fk being received by the stopper **38***c* via the piston **38***b*.

If, for some reason, an excessive rise takes place in the fluid pressure of the pressure transmitting medium in the pressure control chamber **10**, then the increased fluid pressure is applied to the piston **38***b* through the liquid channel **39**. When the force applied to the piston **38***b* surpasses load Fk, the spring **38***a* contracts, causing the piston **38***b* to move toward the spring **38***a*. This increases the capacity of the pressure control chamber **10**, easing the rise in the fluid pressure of the pressure transmitting medium.

Thus, according to the fourteenth embodiment, the same advantages as those of the thirteenth embodiment described above are obtained.

What is claimed is:

1. A fuel injection system comprising:

a valve main body having a needle guide cavity with the distal end thereof formed as an injection aperture, fuel

passing through said needle guide cavity to be injected through said injection aperture;

a pressure control chamber filled with a pressure transmitting medium;

a piston for changing the fluid pressure of said pressure transmitting medium in said pressure control chamber;

a needle valve having one end thereof located in said needle guide cavity and the other end thereof located in said pressure control chamber, said needle valve being installed in such a manner that it is allowed to move to open or close said injection aperture;

a pressure receiving section which is provided on a portion of said needle valve located in said pressure control chamber and which is subjected to said fluid pressure;

a pre-loading means for pre-loading said needle valve in a direction for closing said injection aperture; and

a piezoelectric element which changes said fluid pressure of said pressure transmitting medium by driving said piston, applies said changed fluid pressure to said pressure receiving section, and moves said needle valve in a direction for opening or closing said injection aperture so as to start or stop the flow of an injection fuel through said injection aperture,

wherein a flow channel for said injection fuel is airtightly independent from said pressure control chamber, and

wherein said pressure transmitting medium is completely sealed off from said injection fuel by a sealing member.

2. A fuel injection system according to claim **1**, wherein a housing chamber for containing the other end of said needle valve is disposed inside said pressure control chamber, a small hole is provided on said housing chamber for communicating between said pressure receiving section side of said needle valve and said pressure control chamber, and said pressure transmitting medium filled in said pressure control chamber and said housing chamber is a liquid which has a higher viscosity coefficient than that of the fuel and which exhibits a small temperature-dependent change in the characteristic thereof.

3. A fuel injection system according to claim **1**, wherein an orifice is provided in a pressure transmitting passage between said piston and said pressure receiving section in said pressure control chamber.

4. A fuel injection system according to claim **1**, wherein said pre-loading means is made of a material which has an excellent attenuation characteristic.

5. A fuel injection system according to claim **1**, further comprising a voltage controlling means which controls a driving voltage applied to said piezoelectric element so that a time-dependent change in said driving voltage is reduced immediately before the lift of the needle valve is completed.

6. A fuel injection system according to claim **1**, further comprising a control relaxing means for relaxing said fluid pressure of said pressure transmitting medium in said pressure control chamber, whereby an excessive increase in said fluid pressure of said pressure transmitting medium is prevented.

7. A fuel injection system according to claim **1**, wherein said pre-loading means is disposed in a gaseous chamber.

* * * * *