UNITED STATES PATENT AND TRADEMARK OFFICE

BEFORE THE PATENT TRIAL AND APPEAL BOARD

MERCEDES-BENZ USA, LLC,
Petitioner,

v.

WESTPORT FUEL SYSTEMS CANADA INC.,
Patent Owner

Inter Partes Review No. IPR2022-00351
Patent No. 6,575,138

DECLARATION OF DR. CHRISTOPHER ATKINSON

TABLE OF CONTENTS

LIST OF DOCUMENTS CONSIDERED.....3
I. INTRODUCTION AND SCOPE OF WORK 4
II. PROFESSIONAL BACKGROUND.....4
III. COMPENSATION.....5
IV. LEGAL PRINCIPLES.....5
V. PERSON OF ORDINARY SKILL IN THE ART 6
VI. CLAIM CONSTRUCTION.....6
VII. THE ’791 PROVISIONAL 7
VIII. CLAIM 1 OF THE ’138 PATENT 8
IX. CONCLUSION.....10

LIST OF DOCUMENTS CONSIDERED

Exhibit No.	Description
1001	**U.S. Patent No. 6,575,138 (the "'138 Patent")**
1007	**U.S. Provisional Application No. 60/159,791 (the "'171 Provisional")**

I. INTRODUCTION AND SCOPE OF WORK

1. My name is Dr. Christopher Atkinson. I am over the age of twenty-one (21) years and competent to make this Declaration.

2. I have been retained by Patent Owner to provide my opinions concerning U.S. Patent No. 6,575,138 (the "'138 Patent") and, in particular, to the challenges made to the '138 Patent in *inter partes* review No. IPR2023-00351.

II. PROFESSIONAL BACKGROUND

3. I have been working in the field of engineering for over 30 years. I received a Bachelor of Science degree in Chemical Engineering in 1983, a Master of Science degree in Mechanical Engineering in 1987 and a Doctor of Science in Mechanical Engineering in the Thermal Sciences in 1991. I have worked extensively in academia, including as the Director of the Center for Alternative Fuels, Engines and Emissions at West Virginia University, and founded two companies focused on internal combustion engines, fuels, and emission reductions. I currently serve as a tenured Professor of Mechanical and Aerospace Engineering at Ohio State University. A primary focus throughout my career has been transportation and vehicle technologies focused on reduction in greenhouse gases and improvements in

efficiency, including internal combustion engine design, development, integration, control, calibration and optimization. Please see my attached CV for further details.

III. COMPENSATION

4. I am being compensated in this matter at $450/hr.

5. My compensation is not dependent on the contents of this Declaration, any testimony I may give, or any outcome of this matter.

IV. LEGAL PRINCIPLES

6. I am not an attorney and have not been asked to offer an opinion on the law. I have not researched the law that may relate to this proceeding. However, as an expert assisting the PTAB in analyzing the issues raised by the Petitioners, I understand that I am obliged to follow existing law. I have therefore been asked to apply the following legal principles to my analysis, and I have done so.

7. A provisional application acts as a constructive reduction to practice when the provisional application contains a written description of the invention, and of the manner and process of making and using it, in such full, clear, concise, and exact terms as to enable a POSITA to make and use the same at the time of its filing. The provisional application must actually or inherently disclose the claim elements of the non-provisional application.

8. The proper test is whether the disclosure of the application, including the text and drawings, reasonably coveys to a person of ordinary skill in the art that the inventor had possession of the claimed subject matter as of the filing date.

V. PERSON OF ORDINARY SKILL IN THE ART

9. A person of ordinary skill in the art ("POSITA") of the '138 Patent as of the date of invention would at least have had a degree in mechanical engineering or a similar discipline along with 2 years of professional experience working with fuel injectors or fuel injection systems for internal combustion engines.

VI. CLAIM CONSTRUCTION

10. I have been advised that for an *inter partes* review, the terms in the claims are construed based on their ordinary and customary meaning to a POSITA at the time of the invention unless the term has been clearly and unambiguously given a special definition in the specification. I understand that intrinsic evidence, including the specification, supplemented by the file history of the patent, are the best sources for understanding a term used differently from its ordinary and customary meaning. Extrinsic evidence, such as dictionaries and expert testimony, are relied on only when the ordinary and customary meaning and the intrinsic evidence are insufficient.

11. In my opinion, the terms of the ’138 Patent do not require any construction as their plain and ordinary meaning is sufficient to fully understand the scope of the claims.

VII. THE ’791 PROVISIONAL

12. In reference to Figs. 1 and 2 of the ’791 Provisional, the hydraulic link 22 is described as being hydraulic cavity 84 formed by a hydraulic chamber 28 and a hydraulic chamber cap 86 and filled with a viscous fluid. Provisional at 12:5-7.

13. A hydraulic piston 72 is located within the chamber 28 and sized to create an extremely small diametrical clearance (50-250 microns) between the piston and the chamber that limits hydraulic flow through the annular gap. 12:10-15.

14. When describing operation of the injector, the ’791 Provisional explains that, due to the speed of the actuation and the brevity of the time of actuation of the injector, the hydraulic fluid does not have sufficient time to flow through the small annular gap and the trapped fluid <u>acts as a solid</u> to transmit the movement of the chamber to the needle valve 14. 13:9-16.

15. The ’791 Provisional goes on to explain that during the time in which the injector is not actuated, the fluid inside the hydraulic chamber 28 leaks from one side of the piston 72 to the other side of the same piston through the annular gap thereby allowing for adjustment of the ‘zero’ position of the piston 72 to compensate

for dimensional changes of the internal and external components of the injector. 14:11-23.

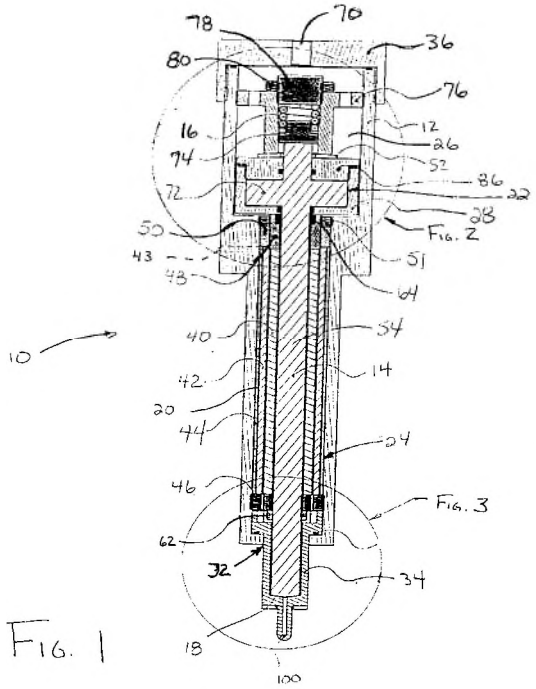

Fig. 1

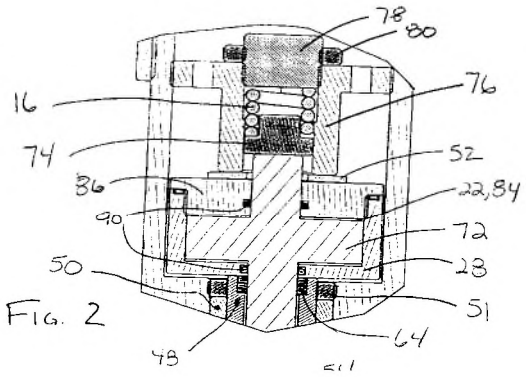

Fig. 2

VIII. CLAIM 1 OF THE ’138 PATENT

16. Element (e) of Claim 1 reads as follows:

> (e) a hydraulic link assembly comprising a passive hydraulic link having a hydraulic fluid thickness through which said opening and closing forces are transmitted, whereby said hydraulic fluid acts substantially as a solid with said thickness being substantially constant while said actuator assembly is activated and wherein said thickness of said hydraulic link is adjustable while said actuator is not activated in response to changes in the dimensional relationship between components of said injection valve to maintain a desired valve lift upon activation of said actuator assembly.

17. Taking into consideration both the text and the drawings of the ’791 Provisional, a POSITA would have understood that the trapped volume of fluid between the piston 72 and the chamber 28 demonstrates the claimed “hydraulic fluid thickness”.

18. The ’791 Provisional explains that, while the trapped volume of fluid acts as a solid to transmit actuation force while the injector is undergoing actuation, a small amount of fluid may pass through the annular gap between the piston 72 and the chamber 28 during those intervals when the injector is not actuated. Provisional 13:9-16. A POSITA would have understood from this disclosure that, while a potential small amount of fluid would pass through the annular gap, the hydraulic fluid thickness would be substantially constant while the actuator assembly is activated and that the hydraulic fluid would act substantially as a solid while the injector is undergoing actuation.

19. The ’791 Provisional also teaches that fluid will leak through the annular gap when the actuator is not activated due to the preload spring. Provisional 14:11-23. A POSITA would have understood from this disclosure that the “thickness of said hydraulic link is adjustable while said actuator is not activated.”

20. The text of the ’791 Provisional also teaches that “[w]hen the actuator assembly 20 is energized, it acts to open the needle valve 14 through the hydraulic

link 22" (8:5-6) and that spring 52 provides the motive force to return the hydraulic link 22 to the closed position and that this force is transferred through the hydraulic fluid of the hydraulic link to the needle (14:1-8). This disclosure, combined with the figures of the '791 Provisional would have led a POSITA to have understood that the hydraulic link described in the '791 Provisional provides a load path for opposing actuating forces that originate from a spring member and the actuator assembly but that the hydraulic link itself does not generate any actuating force.

CONCLUSION

21. All statements made herein of my own knowledge are true, all statements made herein on information and belief are believed to be true, and these statements were made with the knowledge that willful false statements and the like are punishable by fine or imprisonment, or both, under 18 U.S.C. § 1001.

Dated: March 22, 2023

\Christopher M. Atkinson\
Dr. Christopher Atkinson