UNITED STATES PATENT AND TRADEMARK OFFICE

BEFORE THE PATENT TRIAL AND APPEAL BOARD

GOOGLE LLC
Petitioner

v.

ECOFACTOR, INC.

(record) Patent Owner

Inter Partes Review No.: (Unassigned)
Patent No. 8,596,550

PETITION FOR INTER PARTES REVIEW

TABLE OF CONTENTS

I. INTRODUCTION 5
II. SUMMARY OF THE ’550 PATENT 5
A. The Claimed Subject Matter..... 5
B. Prosecution History 9
IDENTIFICATION OF CHALLENGE 9
III. STATEMENT OF PRECISE RELIEF REQUESTED 9
IV. CLAIM CONSTRUCTION 10
A. Stipulated Constructions..... 10
B. “database” 11
V. DETAILED EXPLANATION OF REASONS FOR UNPATENTABILITY 11
Ground 1. Claims 17-23 are obvious over Ehlers in view of Wruck. 11
A. Effective Prior Art Dates..... 11
B. Overview of the Ground..... 12
1. Overview of Ehlers 12
2. Overview of Wruck.....15
3. Overview of the Combination.....17
C. *Graham* Factors 19
D. Reasonable Expectation of Success..... 19
E. Analogous Art..... 20
F. Claim Mapping 20
Ground 2. Claims 17-23 are obvious over Ols ’725 in view of Boait and Wruck. 47
A. Effective Prior Art Dates..... 47
B. Overview of the Ground..... 48
1. Overview of Ols ’725.....48
2. Overview of Boait 49
3. Overview of Wruck.....50
4. Overview of the Combination.....51
C. *Graham* Factors 52
D. Reasonable Expectation of Success..... 52
E. Analogous Art..... 52
F. Claim Mapping 53
VI. MANDATORY NOTICES 73
VII. CONCLUSION.....76
CERTIFICATE OF SERVICE..... 77
CERTIFICATE OF WORD COUNT..... 78

TABLE OF EXHIBITS

Exhibit No.	Description
1001	U.S. Patent No. 8,596,550 ("the '550 patent").
1002	Declaration of David M. Auslander.
1003	C.V. of David M. Auslander.
1004	U.S. Patent App. Pub. 2004/0117330 ("Ehlers '330").
1005	U.S. Patent App. Pub. 2005/0040250 A1 ("Wruck").
1006	U.S. Patent No. 8,374,725 ("Ols '725")
1007	U.K. Patent App. Pub. No. GB 2432016 ("Boait").
1008	File History of Application No. 12/778,052.
1009	U.S. Patent App. Pub. 2005/0171645 ("Oswald").
1010	U.S. Patent No. 5,934,554 ("Charles").
1011	U.S. Patent No. 6,029,092 ("Stein").
1012	ITC Inv. No. 337-TA-1258, Order No. 18, Construing the Terms of the Asserted Claims of the Patents at Issue (Sept. 1, 2021).
1013	*ecobee, Inc. v. EcoFactor, Inc.*, 1-21-cv-00323 (D. Del.), Answer (May 5, 2021).
1014	*ecobee, Inc. v. EcoFactor, Inc.*, 1-21-cv-00323 (D. Del.), Scheduling Order (October 14, 2021).
1015	Horan, T, *Control Systems and Applications for HVAC/R*, Prentice-Hall, Inc., 1997.
1016	Levenhagen, J, *HVAC Control and Systems*, McGraw-Hill, Inc., 1993.

1017	U.S. Patent No. 8,751,186 B2 ("the '186 patent").
1018	Excerpt from McDaniel, G, *IBM Dictionary of Computing*, McGraw-Hill, Inc., 1993, p. 165.
1019	U.S. Patent No. 7,784,704 ("Harter").
1020	*Exhibit number not used*.
1021	*Exhibit number not used*.
1022	Comparison Document – ecobee Petition filed in IPR2022-00969 vs. Present Petition

I. INTRODUCTION

Petitioner respectfully requests *inter partes* review under 35 U.S.C. § 311 of claims 17-23 of U.S. Pat. No. 8,596,550 ("the '550 patent").

II. SUMMARY OF THE '550 PATENT

A. The Claimed Subject Matter

The '550 patent relates to controlling climate control systems, such as heating and cooling ("HVAC") systems. (Ex. 1001, Abstract, 1:18-2:17, 3:48-67, 4:8-32)(Ex. 1002, ¶28). HVAC systems have, for decades, been controlled by thermostats. (Ex. 1001, 1:18-2:17)(Ex. 1002, ¶29). Thermostats are typically wall-mounted units with internal temperature sensors, which allow a user to set a target temperature. (Ex. 1002, ¶29). The target temperature, or "setpoint," is compared against the actual temperature, and the HVAC system is essentially switched on or off to maintain the setpoint temperature. (Ex. 1002, ¶29).

"Programmable thermostats have been available for more than 20 years," as the '550 patent notes. (Ex. 1001, 1:18-19). They "offer two types of advantages" over non-programmable devices. (Ex. 1001, 1:19-41)(Ex. 1002, ¶30). First, "programmable thermostats can save energy ... because they automate the process of reducing conditioning during times when the space is unoccupied, or while occupants are sleeping, and thus reduce energy consumption." (Ex. 1001, 1:21-25). Second, "programmable thermostats can also enhance comfort…. For example.... [a] programmable thermostat allows homeowners to anticipate [a] desired result by

programming a pre-conditioning of the home. So, for example, if the homeowner gets out of bed at 7 AM, setting the thermostat to change from the overnight setpoint of 64 degrees to 70 at 6 AM can make the house comfortable when the consumer gets up." (Ex. 1001, 1:26-41).

According to the '550 patent, however, "all of the advantages of a programmable thermostat depend on the match between the preferences of the occupants and the actual settings employed." (Ex. 1001, 1:45-47)(Ex. 1002, ¶31). "If the temperatures programmed into a thermostat do not accurately reflect the preferences of the occupants, those occupants are likely to resort to manual overrides of the programmed settings." (Ex. 1001, 1:64-67)(Ex. 1002, ¶31).

The '550 patent discusses "adapting to signaling from occupants in the form of manual temperature changes and incorporating the information contained in such gestures into long-term programming." (Ex. 1001, 2:10-12)(Ex. 1002, ¶32). In other words, the '550 patent suggests detecting user-initiated manual changes to temperature settings (*e.g.*, programmed setpoints) and then using that information to make changes to long-term programming of a thermostat. (Ex. 1002, ¶¶32-33). It also discusses using inside temperature, outside temperature, and other factors in the programming. (Ex. 1001, 2:12-17, 5:17-34)(Ex. 1002, ¶¶32-33). As the '550 patent notes, such calculations might involve the rate at which an HVAC system heats or

cools a building to reach or maintain a setpoint at the desired time. (Ex. 1001, 5:5-40, 3:48-67, claim 17)(Ex. 1002, ¶32).

However, these features were already known in the field. The difference between the indoor and outdoor temperature was known to affect the rate at which a building loses or gains heat. (Ex. 1002, ¶34). For example, on a hot summer afternoon, a building will gain heat (incur a rise in temperature) faster than on a cool day, placing greater demand on the air conditioning system on a hot day. (Ex. 1002, ¶34). Similarly, on a cold winter day, the building will lose heat more quickly than on a warmer day, placing greater demand on the heating system. (Ex. 1002, ¶34). The ability of the HVAC system to change the temperature of the house (and thus affect the rate of change of temperature) was known to depend on the outside temperature. (Ex. 1002, ¶34).

One common prior art application of this principle relates to, for example, "setback and recovery" schedules. Such schedules change the setpoint of a thermostat at different times of day, in order to save energy when the building is unoccupied. (Ex. 1002, ¶35). For example, a workplace thermostat could be programmed during the winter to have a daytime (8 AM to 5 PM) setpoint of 70º F, and an evening setpoint of 50 F (when the building is expected to be unoccupied). Allowing the building to cool down to 50 F in the evening is called "setback", while heating the building back up to 70 F in the morning is called "recovery." (Ex. 1002,

¶35). As discussed below, the time needed for recovery was known to be calculated based on the rate of change possible given, *e.g.*, the outside temperature.

It was also known to use user-initiated manual changes to temperature settings to improve thermostat programming and reduce the need for users to make manual setpoint adjustments. For instance, Ehlers, discussed below, explains that the system may perform "set point pattern change tracking," where manual changes by the user may be tracked and utilized (with artificial learning and execution routines) in order to improve the operation of a thermostat control system. (Ex. 1004, ¶¶0268, 0308, 0309)(Ex. 1002, ¶37).

Thus, the claims of the '550 patent simply recite a combination of well-known HVAC control features. (Ex. 1002, ¶36). Exemplary independent claim 17 of the '550 patent reads as follows:

> 17. An apparatus for detecting manual changes to the set point for a thermostatic controller comprising:
>
> at least a programmable communicating thermostat;
>
> at least a remote processor;
>
> at least a network connecting said remote processor and said communicating;
>
> at least a database comprising a plurality of internal temperature measurements taken within a structure and a plurality of outside temperature measurements relating to temperatures outside the structure;

> computer hardware comprising one or more computer processors configured to use the stored data to predict a rate of change of temperatures inside the structure in response to changes in outside temperatures;
>
> the one or more computer processors configured to calculate scheduled setpoint programming of the programmable communicating thermostat for one or more times based on the predicted rate of change, the scheduled programming comprising one or more automated setpoints;
>
> at least a database that stores the one or more automated setpoints associated with the scheduled programming for said programmable communicating thermostat;
>
> at least a database that stores actual setpoint programming of said programmable communicating thermostat; and
>
> the one or more computer processors configured to compare the one or more automated setpoints associated with said scheduled setpoint programming with said actual setpoint programming.

(Ex. 1001, claim 17).

B. Prosecution History

The application that would become the ’550 patent was filed on May 11, 2010. (Ex. 1001). The application claimed priority to U.S. Provisional Patent Application No. 61/215999, which was filed on May 12, 2009. (Ex. 1001).

IDENTIFICATION OF CHALLENGE

III. STATEMENT OF PRECISE RELIEF REQUESTED

Petitioner respectfully requests that claims 17-23 of the ’550 patent be canceled based on the following grounds:

Ground 1: Claims 17-23 are obvious over Ehlers in view of Wruck.

Ground 2: Claims 17-23 are obvious over Ols in view of Boait and Wruck.

IV. CLAIM CONSTRUCTION

A. Stipulated Constructions

This Petition should be considered using claim constructions Patent Owner itself agreed to in the ITC investigation captioned *Certain Smart Thermostat Systems*.[1] (Ex. 1012, 17). "In an inter partes review proceeding, a claim of a patent…shall be construed using the same claim construction standard that would be used to construe the claim in a civil action under 35 U.S.C. 282(b)…." 37 C.F.R. § 42.100(b).

'550 Patent Term	Stipulated Construction
"compare"/"comparing"	"analyze/analyzing to determine one or more similarities or differences between"
"rate of change of temperatures inside the structure"	"the difference between inside temperature measurements divided by the span of time between the measurements"
"setpoint"	"a temperature setting for a thermostat to achieve or maintain"
"automated setpoint"	"a computer-calculated temperature setting for a thermostat to achieve or maintain"

[1] There, claim 17 was found invalid under 35 U.S.C. § 112.

B. "database"

The '550 patent describes multiple databases stored on a "database structure 300," as shown in Fig. 5. (Ex. 1001, 4:33-42, 5:55-58). A POSITA would have understood that a database, in the context of the '550 patent, is a collection of data stored on a data structure, where multiple databases can be stored on one data structure. (Ex. 1002, ¶43)(Ex. 1018, 165). Further, the plain and ordinary meaning of database is "an organized collection of data." (Ex. 1002, ¶43)(Ex. 1018, 165).

V. DETAILED EXPLANATION OF REASONS FOR UNPATENTABILITY

Ground 1. Claims 17-23 are obvious over Ehlers in view of Wruck.

Claims 17-23 are obvious under pre-AIA 35 U.S.C. § 103(a) over U.S. Pat. App. Pub. 2004/0117330 ("Ehlers")(Ex. 1004) in view of U.S. Pat. Pub. 2005/0040250 ("Wruck")(Ex. 1005).

A. Effective Prior Art Dates

Ehlers was published on June 17, 2004, and is therefore prior art under pre-AIA 35 U.S.C. § 102(b).

Ehlers was not of record during the prosecution of the application leading to the '550 patent, although a different Ehlers (U.S. Pat. No. 7,130,719 ("Ehlers '719")), from a different patent family and having a different disclosure, was cited in a 78-reference IDS. (Ex. 1008, 253). Ehlers '719 was not discussed on the record

by the Examiner or Applicant. *See Weber, Inc. v. Provisur Technologies, Inc.*, IPR2019-01467, Paper 7 at 10 (PTAB Feb. 14, 2020)(Ex. 1002, ¶¶47).

Wruck was published on February 24, 2005 and is therefore prior art under at least pre-AIA 35 U.S.C. § 102(b). Wruck was not of record during the prosecution of the application leading to the ’550 patent.

B. Overview of the Ground

While Ehlers teaches and/or suggests all elements of the claims, Wruck reinforces the obviousness cases with respect to, at least, “compar[ing] ... automated setpoints ... with ... actual setpoint[s],” as described in more detail below. Wruck also describes other features of the claim.

1. Overview of Ehlers

Ehlers is similar to the ’550 patent. (Ex. 1004, Fig. 1B, ¶¶0072-0079, 0099)(Ex. 1002, ¶¶50). Shown below are Fig. 1B of Ehlers (left side), compared with Fig. 2 of the ’550 patent (right side):

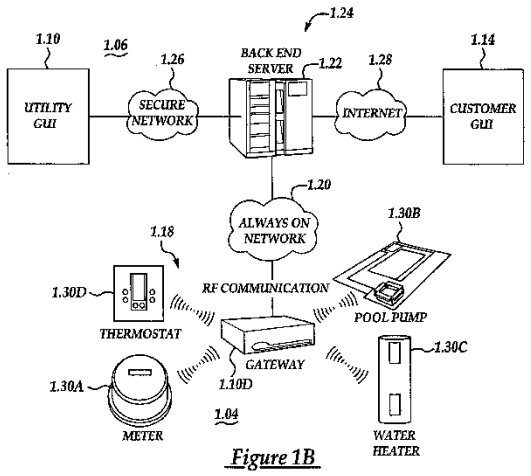	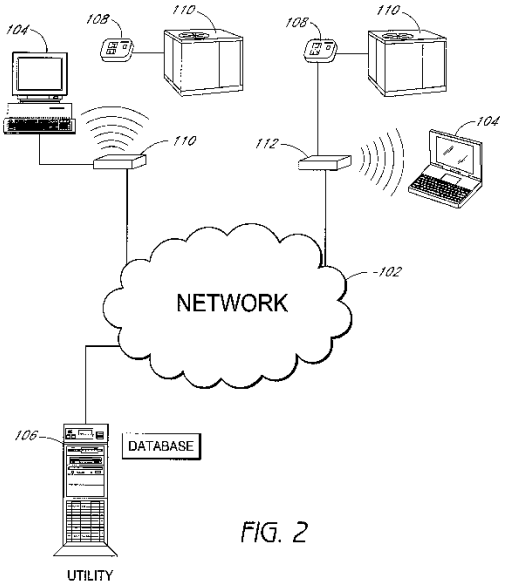
Ehlers, Fig. 1B	’550 patent, Fig. 2

(Ex. 1004, Fig. 1B, ¶¶0072-0079)(Ex. 1002, ¶50). In both systems there are conditioned spaces having thermostats. (Ex. 1004, ¶0076)(Ex. 1001, 3:48-67, 4:8-32)(Ex. 1002, ¶51). The thermostats in each system are connected to gateways, specifically gateway 1.10D in Ehlers (Ex. 1004, ¶¶0061-0062) and gateways 112 in the ’550 patent (Ex. 1001, 3:48-67, 7:54-61)(Ex. 1002, ¶51). The gateways connect the thermostats in each system over networks to servers. (Ex. 1004, ¶¶0072-0073)(Ex. 1001, 3:48-67)(Ex. 1002, ¶51).

Both systems collect and store information relevant to the conditioning of a building. (Ex. 1004, ¶¶0088, 0151, 0268-0309)(Ex. 1001, 4:33-42)(Ex. 1002, ¶52). In Ehlers, for example:

> "[T]he system 1.02 may have the ability to sense the current indoor temperature and could be enhanced to include at a minimum, humidity sensing, outside temperature, ... dew point and local weather forecast data or encoded signals ... ."

(Ex. 1004, ¶0088)(Ex. 1002, ¶52).

Ehlers's thermostat contains various scheduled temperature setpoints for the HVAC system, which are manually changeable by a user. (Ex. 1004, ¶¶0012, 0013, 0153-0160, 0228, 0239, 0244, 0253-0256, 0278, 0281, 0308-0309, 0316-0324, 0320). A user can also "override" a scheduled setpoint. (Ex. 1004, ¶¶0116, 0118, 0156, 0316, 0354, Fig. 4C)(Ex. 1002, ¶53).

Ehlers also teaches using rates of changes in temperatures, including calculating the rate at which inside temperature changes at any given outside temperature ("thermal gain rate") for a given setpoint, in order to predict how long it will take for the HVAC system to heat or cool the building from one setpoint to another. (Ex. 1004, ¶¶0253-0254, 0256, 0295, Fig. 3D)(Ex. 1002, ¶54). Ehlers can use this thermal gain rate to "compute[] the required effective set point offset needed to keep the HVAC cycle run time at [a] specified trigger level." (Ex. 1004, ¶0256). Thus, by utilizing effect thermal gain rate has on HVAC run time, the system of Ehlers determines what future setpoint would minimize run time. (Ex. 1004, ¶0256)(Ex. 1002, ¶54).

Ehlers also teaches detecting and implementing a user's manual changes to a setpoint. (Ex. 1004, ¶0242 ("the system 3.08 manages comfort for the customer site 1.04 by learning from the user's inputs or adjustments to the system 3.08 to change or modify indoor air temperature"), ¶0243 (controls are "modified as needed based on the user's changes to the set point at the thermostat 1.30D" and that a "control algorithm [] learn[s] the user's individual preferences and over time, eliminat[es] the need for the site 1.04 occupant to make any changes"))(Ex. 1002, ¶55).

Ehlers further teaches that its system performs "set point pattern change tracking," in which the system tracks and learns from a user's changes to setpoints. (Ex. 1004, ¶¶0268, 0308, 0309)(Ex. 1002, ¶56). Thus, Ehlers describes that its system detects manual changes to HVAC setpoints, and uses such changes to alter the HVAC setpoint control algorithms, as claimed in the '550 patent. (Ex. 1004, ¶¶0242-0243, 0268, 0308, 0309)(Ex. 1002, ¶57).

2. Overview of Wruck

Wruck teaches a system that allows a wireless device such as a PDA to control a thermostat. (Ex. 1005, ¶¶0002-0005)(Ex. 1002, ¶58). The thermostat can be programmed with a schedule to save energy, as shown, for example, in Figs. 9G and 9I of Wruck, reproduced here:

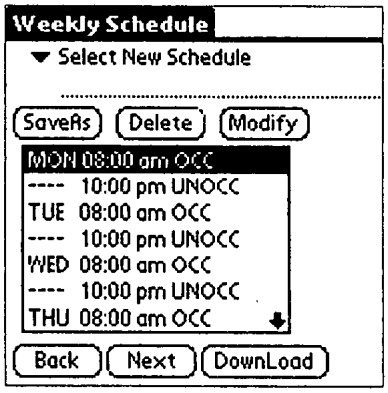

Figure 9G

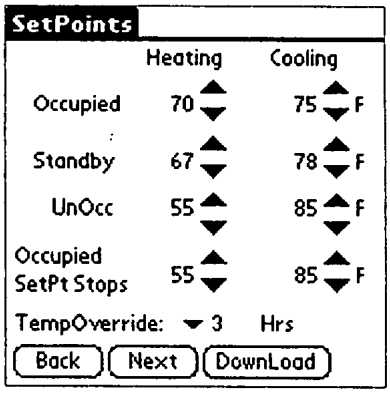

Figure 9I

(Ex. 1005, Figs. 9G and 9I, ¶0098)(Ex. 1002, ¶58). As shown in the figures, the user can enter times of the day when periods of occupancy and non-occupancy begin (Fig. 9G and Fig. 9I), and associated heating and cooling setpoints. (*Id.*). Thus, Wruck teaches a system with "scheduled programming of the thermostatic controller," similar to that of the '550 patent. (Ex. 1002, ¶58).

Wruck further teaches that the user can temporarily override scheduled setpoints. (Ex. 1005, ¶¶0005, 0014-0015, 0104, 0125, 0150, 0198, 0231, Figs. 14s-14z, 20b, Tables 28, 31, 36)(Ex. 1002, ¶59). This can be accomplished, for example, by pressing the up and down keys on the thermostat. (Ex. 1005, Table 36, Table 38, items 96 and 97, ¶0150)(Ex. 1002, ¶59).

Wruck further explains that manual changes may be detected using a "delta" between an actual temporary setpoint and a scheduled setpoint. Specifically, Wruck teaches that if the user enters a new "temporary setpoint," that new, user-entered

setpoint will be displayed on the thermostat if it is different from the scheduled setpoint, as shown in Table 28 of Wruck, reproduced in relevant part below, with highlighting added:

TABLE 28

Thermostat Data	Display	Display Dependency	Report Text Description	Comments
version.major	A		FirmwareVersion: 0.0.19	
version.minor				
version.bug				
version.commVer	V		ComVersion: 1	
version.rePgmrVer	V		ReProgrammerVersion:	
status3.subBaseType	A		SubBaseID: T7350D, 3H3C	
subBase.connected	V		CommunicatingSubBase: Yes	
statusAnalog.spaceTemp	A		RoomTemperature: 75 F.	
statusAnalog.dischTemp	D	configured	DischargeAirTemp: 105 F.	config.dischAirSensor
statusAnalog.spaceHumidity	D	configured	Room RH: 33%	config.humiditySensor
statusAnalog.oDTemp	D	configured	OutdoorAir: 25 F.	config.oDAirSensor
statusAnalog.remoteStPtOffset	D	configured	RemoteSetPtOffset: 2 F.	config.remoteSetPoint
statusAnalog.temporarySetPt	D	value < > 0	TemporarySetPt: 76 F.	Display actual temporary setpoint if Delta value < > 0

(Ex. 1005, Table 28, ¶0110)(Ex. 1002, ¶60). Wruck describes checking whether the difference between the temporary setpoint and the scheduled setpoint is not equal to zero, and if so, to display the temporary setpoint. (Ex. 1002, ¶61).

3. Overview of the Combination

As noted above, Ehlers teaches and/or suggests all of the features of claims 17-23.[2] With respect to "compar[ing] ... automated setpoints ... with ... actual setpoint[s]," Ehlers describes generating an automatic thermostatic control schedule, having automated setpoints. (Ex. 1004, ¶¶0231-0234, 0239)(Ex. 1002, ¶62). Ehlers further teaches adjusting its schedule by "learning" from a user's setpoint changes that depart from the schedule. (Ex. 1004, ¶0242 ("system 3.08 manages comfort for

[2] Petitioners rely upon the combination out of an abundance of caution.

the customer site 1.04 by learning from the user's inputs or adjustments to the system 3.08 to change or modify indoor air temperature. This learning process alters the operation of the system 3.08, freeing the customer from having to make changes to manage the indoor environmental condition.”))(Ex. 1002, ¶62).

Based on Ehlers alone, it would have been obvious to compare one or more automated setpoints associated with the scheduled setpoint programming with the actual setpoint programming. (Ex. 1002, ¶63). This would have allowed the system to determine whether a manual change occurred, how far off the automated setpoints were from the user's desired setpoint, and to eliminate cases where manual changes were made that resulted in no difference between the user's setpoint and the automated setpoint (*e.g.*, where the user increases and then decreases the setpoint by one degree). (Ex. 1002, ¶63). A POSITA would have understood from Ehlers that comparing entered and automated setpoints would be beneficial to the described “learning from the user's inputs or adjustments to the system 3.08 to change or modify indoor air temperature.” (Ex. 1004, ¶0242)(Ex. 1002, ¶63).

Wruck provides, at least, an example of how the manually entered setpoint override may be determined—by comparing a user desired setpoint with a calculated setpoint—such that if the difference in setpoints is not equal to zero, the system may display the new setpoint. (Ex. 1005, Table 28, ¶0110)(Ex. 1002, ¶64).

C. *Graham* Factors

The level of ordinary skill encompassed a (1) Bachelor's degree in engineering, computer science, or a comparable field of study, and (2) at least five years of (i) professional experience in building energy management and controls, or (ii) relevant industry experience. Additional relevant industry experience may compensate for lack of formal education or vice versa. (Ex. 1002, ¶¶23-25).

The scope and content of the prior art are discussed throughout the Ground.

The differences between the prior art and the claims are discussed in the "Overview of the Combination" and in the claim mapping, below.

Petitioner is not aware of any secondary considerations that would make an inference of non-obviousness more likely.

D. Reasonable Expectation of Success

A POSITA in the relevant timeframe would have had a reasonable expectation of success in implementing the combination (as described with particularity below in the claim mapping section) of Ehlers and Wruck. (Ex. 1002, ¶¶66). As Mr. Auslander explains, the art was relatively predictable in the relevant timeframe (early 2009). (Ex. 1002, ¶66). A POSITA would have been able to make any necessary modifications to implement this Ground. (Ex. 1002, ¶66). This is discussed in more detail in the claim mapping section, where appropriate.

E. Analogous Art

Ehlers and Wruck are in the same field as the '550 patent (building energy management and controls). (Ex. 1001, 1:18-2:17, 3:48-67, claim 17)("An apparatus for detecting manual changes to the setpoint for a thermostatic controller comprising….")(Ex. 1004, Abstract, Title)(Ex. 1005, Abstract, Title, ¶¶0002-0008)(Ex. 1002, ¶67). Specifically, these references address controlling heating and cooling systems, implementation of setpoints, and HVAC control in view of outdoor temperatures. (Ex. 1001, claim 1, Abstract, 1:18-2:17, 3:48-67, 4:62-5:40)(Ex. 1005, Abstract, ¶¶0062, 0120, 0183)(Ex. 1004, ¶¶0090, 0092, 0095, 0137, 0141, 0145, 0147, 0167, 0182, 0204, 0239, 0244-0247, 0252-0256 and ¶¶0078-0082)(Ex. 1002, ¶68). *See Wyers v. Master Lock Co.*, 616 F.3d 1231, 1238 (Fed. Cir. 2010).

F. Claim Mapping

<u>Independent Claim 17</u>

"17[a]. An apparatus for detecting manual changes to the set point for a thermostatic controller comprising:"

Ehlers in view of Wruck renders obvious an apparatus for detecting manual changes to the setpoint for a thermostatic controller. (Ex. 1002, ¶¶70).

First, Ehlers teaches a system that involves managing a thermostatic controller, such as the thermostat of a house. (Ex. 1004, Abstract, ¶¶0090, 0092, 0191, 0084, 0190)(*See also* Ex. 1004, ¶¶0150, 0229, 0066, 0090, 0138, 0141, 0150, 0192, 0204, 0254, 0263, Fig. 2E). The overall system is depicted in Figure 1B below:

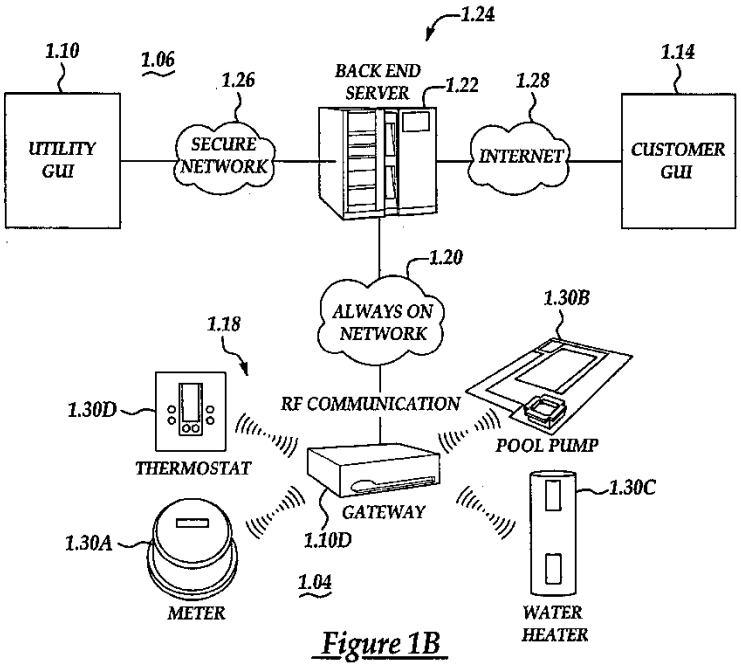

Figure 1B

(Ex. 1004, Fig. 1B)(Ex. 1002, ¶71). Another exemplary configuration of a portion of Ehlers's system (system 3.08) is illustrated in Figure 3B, reproduced below:

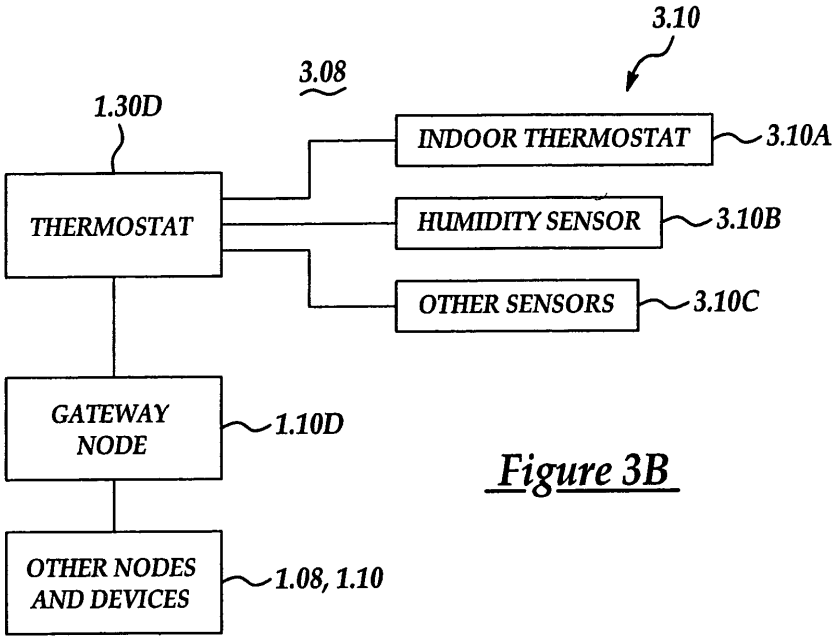

Figure 3B

(Ex. 1004, Fig. 3B)(Ex. 1002, ¶72). Ehlers teaches that "the system 1.02 is designed to provide monitoring and control of major loads, e.g., total electric load, HVAC systems, ..." (Ex. 1004, ¶¶0088, 0095, 0141, 0224, 0231, 0242, 0256, Fig. 1B, Fig. 3B)(Ex. 1002, ¶73).

As can be seen in Figures 1B and 3B, Ehlers's system contains a thermostatic controller (*e.g.*, thermostat device 1.30D). (Ex. 1004, ¶¶0076, 0088, 0141, 0149, 0223, 0229, 0224 ("thermostat 1.30D is an advanced thermostatic control device"))(Ex. 1002, ¶74).

"[T]hermostat 1.30D" may also "form[] part of a temperature and environmental sensing and control system 3.08." (*See, e.g.*, Ex. 1004, Fig. 3B, ¶0229). "Based on the sensed data, the thermostat 1.30D controls other devices 1.08 to manage air quality." (Ex. 1004, ¶¶0088, 0229, 0230, 0231, 0232, 0234, 0256)(Ex. 1002, ¶75).

Ehlers's thermostatic controller contains various manually changeable temperature setpoints for the HVAC system. (*See, e.g.*, Ex. 1004, ¶¶0153-0160, 0253-0256, 0281, 0320, 0116, 0118, 0316, 0354, Fig. 4C)(Ex. 1002, ¶76).

Ehlers explains that "[i]n one aspect of the invention, the system 3.08 manages comfort for the customer site 1.04 by learning from the user's inputs or adjustments to the system 3.08 to change or modify indoor air temperature." (Ex. 1004, ¶0242, 0243)(Ex. 1002, ¶77). Ehlers further teaches that its system also performs "set point

pattern change tracking," where setpoint changes initiated by the occupant are stored in relationship to outside weather conditions "for use with … artificial intelligence learning and execution routines." (Ex. 1004, ¶¶0268, 0308, 0309)(Ex. 1002, ¶77). A POSITA would recognize that tracking and learning from the user's changes suggests the detecting of when a user has changed the setpoint. (Ex. 1002, ¶78)(Ex. 1004, ¶¶0242-0243 ("[t]his learning process alters the operation of the system 3.08, freeing the customer from having to make changes to manage the indoor environmental condition")).

Furthermore, Wruck discloses that if the user enters a new "temporary setpoint," it will be displayed on the thermostat if the new user-entered setpoint is different from the scheduled setpoint. (Ex. 1005, Table 28, ¶0110)(Ex. 1002, ¶79).

"[17b] at least a programmable communicating thermostat;"

As set forth under claim element 17[a], Ehlers's system contains a programmable communicating thermostat in the form of thermostat device 1.30D, which is in communication with gateway node 1.10D via a network. (Ex. 1002, ¶80). The temperature setpoint of Ehlers's HVAC system is manually changeable to a user's desired temperature setpoint. (Ex. 1004, ¶¶0012, 0013, 0153-0160, 0228, 0239, 0244, 0253, 0254, 0255, 0256, 0281, 0308-0309, 0316-0324, 0320)(Ex. 1002, ¶81). A user can also "override" a scheduled setpoint, which is programmed. (Ex. 1004, ¶¶0116, 0118, 0156, 0316, 0354, Fig. 4C)(Ex. 1002, ¶81).

Indeed, Ehlers specifically describes that its communicating thermostat is programmable, where "with regard to the thermostat 1.30D, the customer may view current temperature, view current heating or cooling setpoint(s) … resume scheduled heating or cooling setpoint(s)." (Ex. 1004, ¶¶0116, 0013, 0017, 0132, 0148–0160, 0171, 0251, 0316, 0335, Fig. 3A)(*see* Ex. 1001, 1:18-20)(Ex. 1002, ¶82).

Wruck also discloses a programmable thermostat 11 that communicates with a PDA device. (Ex. 1005, ¶¶ 0062-0064, Fig. 2)(Ex. 1002, ¶83).

"[17c] at least a remote processor;"

Ehlers discloses a remote processor in the form of a gateway node. Ehlers explains that "each node 1.10 in the system 1.02 includes a node processor 2.02 and memory 2.04." (Ex. 1004, ¶0268)(*see also* Ex. 1004, ¶¶0244, 0253, 0268, 0295)(Ex. 1002, ¶84). The gateway node is (or includes) a computer processor so that it can, among other things, control devices, administer demand reduction programs, and store data. (Ex. 1004, ¶¶0137, 0142, 0145, 0147, 0150, 0180, 0268)(Ex. 1002, ¶84).

Ehlers teaches that the gateway node can be situated at a different location than the thermostat 1.30D (*i.e.*, it may be remote). (*See, e.g.*, Ex. 1004, ¶¶0181, 0182, 0202, 0257, 0266)(Ex. 1002, ¶85). For example, Ehlers explains that "[t]he gateway node ... could be a node which is part of an aggregate group of homes in a star network" and further teaches that nodes "may be located at a single customer site 1.04 or across multiple sites 1.04." (Ex. 1004, ¶¶0202, 0181). In such a

configuration, there is one gateway node for a group of sites and thus the gateway node is not located in the same structure as the programmable communicating thermostat for a particular site. (Ex. 1002, ¶85). Indeed, given Ehlers' disclosure, a POSITA would have found it obvious to locate the gateway node in a different structure from the programmable communicating thermostat and the same would have been a simple design choice. (Ex. 1002, ¶86).

Wruck discloses that a PDA or PC may be utilized to process information regarding, and configure operation of, the programmable thermostat 11. (Ex. 1005, ¶¶0062, 0063, Fig. 2)(Ex. 1002, ¶87).

"[17d] at least a network connecting said remote processor and said communicating;"[3]

Ehlers discloses the remote processor communicates with the programmable communicating thermostat (thermostat 1.30D) via a network RF communication. (Ex. 1002, ¶¶88-89). Figure 1B illustrates Ehlers's system:

[3] For purposes of this analysis, Petitioner interprets "said communicating" to be the communicating thermostat.

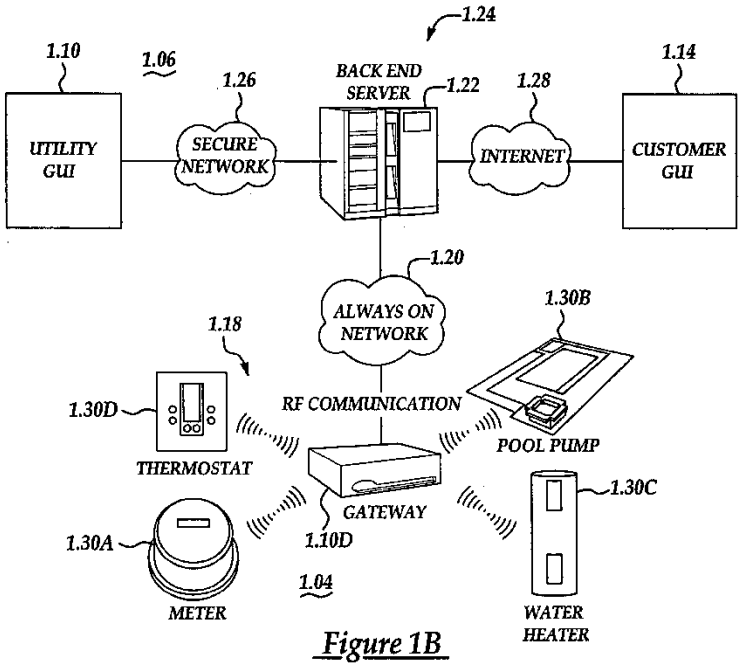

Figure 1B

(Ex. 1004, Fig. 1B). As can be seen, thermostat 1.30D connects to gateway 1.10D (Ex. 1004, ¶¶0061-0062), which includes a remote processor as set forth under claim element [17c]. (Ex. 1002, ¶89). The gateway node 1.10D communicates with the thermostat 1.30D via a RF communication network. (Ex. 1004, ¶¶0061-0062, 0072-0076, 0084, 0150, 0152-0153)(Ex. 1002, ¶89).

Wruck also discloses that the thermostat 11 may be connected via a network, and that thermostat information may be transmitted on a network communications bus 84. (Ex. 1005, ¶¶0135, 0144)(Ex. 1002, ¶90).

> ***"[17e] at least a database comprising a plurality of internal temperature measurements taken within a structure and a plurality of outside temperature measurements relating to temperatures outside the structure;"***

As set forth under claim element [17c], Ehlers's system stores temperature data. Ehlers's system includes "indoor air temperature sensor 3.10A" which takes internal temperature measurements taken within a structure. (Ex. 1004, ¶0230)(Ex. 1002, ¶91). Ehlers explains that "various data elements are ***stored*** within the system 1.02." (Ex. 1004, ¶0268). "[T]he data may be stored in gateway node 1.10D" or in other nodes in the system. (Ex. 1004, ¶¶0268, 0085)(*see also* Ex. 1004, ¶0268"each node 1.10 … includes … memory 2.04")(*see also* Ex. 1004, ¶¶0244, 0253, 0268, 0295)(Ex. 1002, ¶91).

As detailed under element [17f], below, Ehlers's system measures inside temperature over time and calculates various thermal gain rates which represent how the temperature inside the structure changes in response to a different outdoor temperature, given different initial starting setpoint temperatures. (Ex. 1002, ¶92). For example, Ehlers's Figure 3D, reproduced below, depicts actual inside temperature measurement data, which were recorded every 4 minutes. (Ex. 1004, ¶¶0253, 0256, Fig. 3D)(3.12A depicts measured inside temperatures associated with a setpoint of 72° F and an outside temperature of 99° F)(Ex. 1002, ¶92).

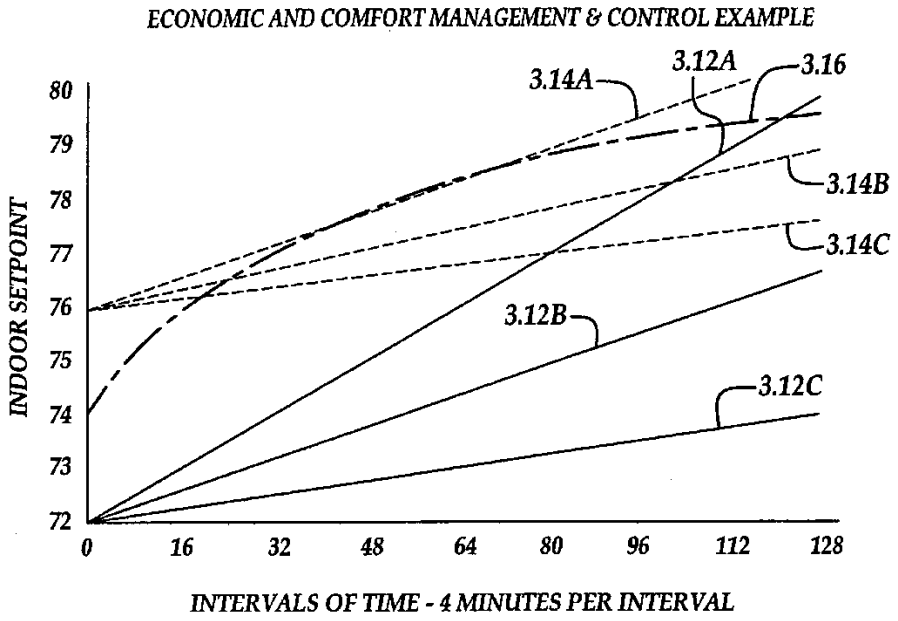

Figure 3D

(Ex. 1004, Fig. 3D)(Ex. 1002, ¶92).

Ehlers' system also permits a user to "view or generate a variety of reports to view historical information about their homes," including "[d]aily temperature reports displaying temperature and setpoints in, e.g., 15-minute intervals" and "[m]onthly temperature reports." (Ex. 1004, ¶¶0123-0125)(*see also* Ex. 1004, ¶0283). Thus, Ehlers suggest storing in a database data comprising a plurality of internal temperature measurements. (Ex. 1004, ¶¶0253, 0256, Fig. 3D, Fig. 3E)(Ex. 1002, ¶¶93-94).

Ehlers's system also stores a plurality of temperature measurements from outside the structure. Specifically, the system includes "sensors 3.10C for measuring and/or sensing ... outside temperature." (Ex. 1004, ¶¶0230, 0088). Ehlers also

discloses storing "[w]eather information and history data including at a minimum outside temperature lows and highs." (Ex. 1004, ¶0293)(Ex. 1002, ¶95). Ehlers also computes and stores a "[c]omputed thermal recovery time for heating and cooling adjusted to compensate for the external temperature." (Ex. 1004, ¶0295)(Ex. 1002, ¶95).

Furthermore, Figure 3D of Ehlers depicts inside temperature measurement data, taken "for different outside temperatures," as discussed with regards to claim element [17f]. (Ex. 1004, ¶¶0253, 0256, Fig. 3D). A POSITA would have understood it was obvious to store outside temperature measurements relating to temperatures outside the structure so as to, for example, facilitate the calculation of thermal gain rates and thermal recovery rates by allowing the system to access stored outside temperature information, as described in Ehlers. (Ex. 1002, ¶96).

Wruck discloses providing a status report that may include such data as "space temperature" and "outside air temperature." (Ex. 1005, ¶0105, Table 25)(Ex. 1002, ¶97).

"[17f] computer hardware comprising one or more computer processors configured to use the stored data to predict a rate of change of temperatures inside the structure in response to changes in outside temperatures;"

Ehlers's system 3.08 uses the stored data, including outside temperatures, to derive a thermal gain rate, which represents a rate of change in temperature inside the structure (*e.g.*, a home). (Ex. 1002, ¶98). Ehlers explains this process as follows:

> "[T]he system 3.08 tracks and learns about the thermal gain characteristics of the home 2.18. To do this, the system 3.08 tracks the thermal gain rate of the home 2.18 for each set point selected over time by the customer."

(Ex. 1004, ¶0253)(Ex. 1002, ¶98). This process is depicted in Fig. 3D of Ehlers, reproduced below:

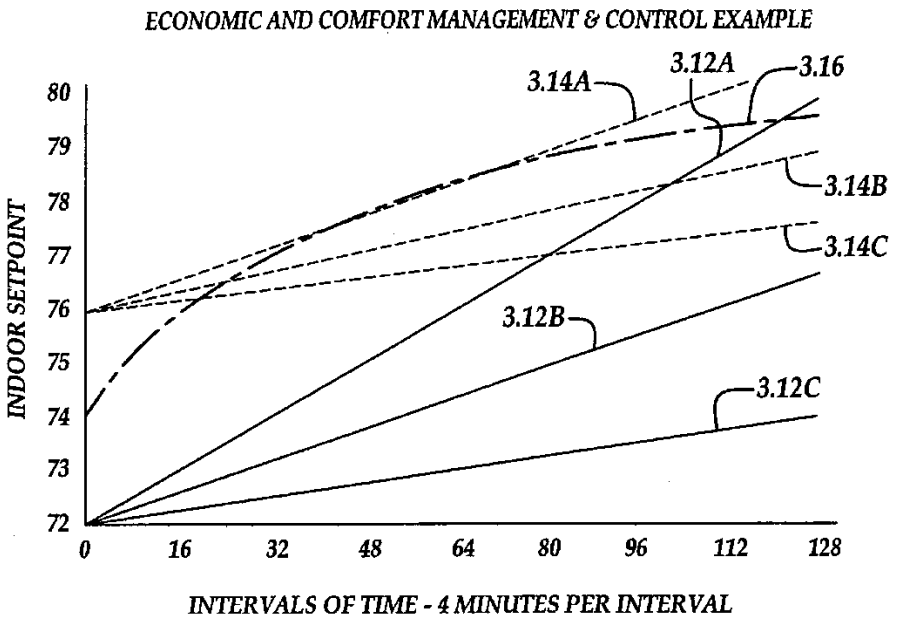

Figure 3D

(Ex. 1004, Fig. 3D)(Ex. 1002, ¶99). Ehlers explains Figure 3D as follows:

> "With reference to FIG. 3D, a thermal gain table for two set points is illustrated. FIG. 3d shows two set points for the home 2.18 that the thermostat 1.30D has recorded. The first set point for which data is available is 72 degrees F. The three trends illustrated as lines 3.12A, 3.12B, and 3.12C plot the thermal rate of gain in the site 1.04 for different outside temperatures….This illustration is used to show the

> impact the set point versus outside temperature differential has over the thermal gain rate in the home 2.18."

(Ex. 1004, ¶0253)(*see also* Ex. 1004, ¶0254)("Since the outside temperature varies continuously during a typical day, the rate of thermal gain and the HVAC run times also vary in accordance with these changes.")(Ex. 1002, ¶100).

The "rate of thermal gain," or "thermal gain rate," in Ehlers is the rate of change in temperature inside the structure (for a given outside temperature), which is depicted by the slope of the lines depicted in Figure 3D (the difference between inside temperature measurements divided by the span of time between the measurements). (*See* Ex. 1004, ¶¶0253, 0256, Fig. 3E, Fig. 3G)(depicting use of "thermal gain rate per hour")(Ex. 1002, ¶101).

Ehlers depicts this "thermal gain rate" in, for example, Figure 3E, reproduced below:

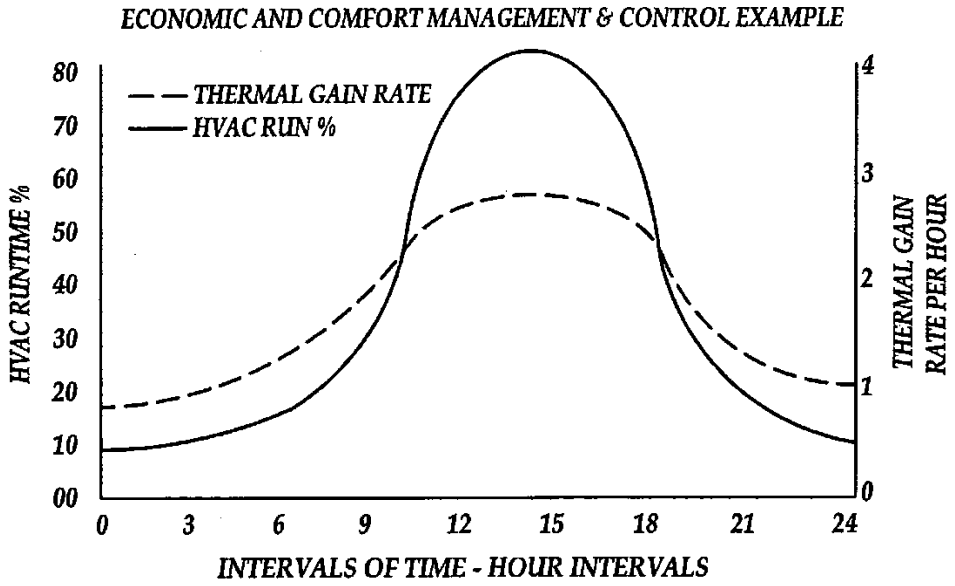

Figure 3E

(Ex. 1004, Fig. 3E)(Ex. 1002, ¶102). Figure 3E depicts the thermal gain rate (in degrees F per hour) over the course of one day where "the set point of the system 3.08 was set at a fixed point for the entire day." (Ex. 1004, ¶0254)(Ex. 1002, ¶102). According to Ehlers, "[this] illustration depicts that as the outside temperature rises and the differential between the indoor set point and the outside temperature increase, [sic] the thermal gain causes the HVAC system to cycle more frequently." (Ex. 1004, ¶0254)(Ex. 1002, ¶102). Thus, despite the fact that the setpoint remains the same during the day, the thermal gain rate (and the inside temperature) changes over the course of the day due to variations in the outside temperature. (Ex. 1002, ¶102). Ehlers also computes and stores a "[c]omputed thermal recovery time for

heating and cooling adjusted to compensate for the external temperature ... .” (Ex. 1004, ¶0295)(Ex. 1002, ¶102).

Accordingly, Ehlers measures the temperature inside the structure over time, and calculates various thermal gain rates which represent how the temperatures inside the structure change in response to changes in outside temperatures, given different setpoint temperatures. (Ex. 1002, ¶103). Ehlers discloses determining “the difference between inside temperature measurements divided by the span of time between the measurements.” (Ex. 1002, ¶103). These thermal gain rates are in response to at least changes in outside temperatures because the thermal gain rates are calculated for different outside temperatures and vary with outside temperature. (Ex. 1004, ¶¶0253-0254)(Ex. 1002, ¶103).

Ehlers uses this data to predict changes in temperature inside the structure in response to at least changes in outside temperatures in connection with certain energy management functions. (Ex. 1002, ¶104). As a first example of this, the thermal gain rate is used to determine a new offset temperature in order to save energy. (Ex. 1004, ¶0256)(Ex. 1002, ¶104). In so doing, Ehlers predicts that the thermal gain rate it computed in the past represents a speed at which temperatures inside the structure will change in response to changes in outside temperatures at the current time or at a future time. (Ex. 1002, ¶104). Ehlers then uses this prediction to determine what future setpoint would not increase HVAC run time over a future

period of time to "compute[] [a] required effective setpoint offset." (Ex. 1004, ¶0256)(Ex. 1002, ¶104).

As a second example, Ehlers teaches that the thermal gain rates can be used to predict recovery time. (Ex. 1002, ¶105). Predicting recovery time allows the system to turn on the HVAC system at the appropriate time, and thus achieve the "occupied" temperature setting by the time people are present. (Ex. 1004, ¶0246)(Ex. 1002, ¶105). For example, the system will try to achieve a certain temperature by a certain time (*e.g.*, the user wants the home to be at 70 F by 6 PM). (Ex. 1004, ¶0246). Ehlers teaches storing:

> Computed thermal recovery time for heating and cooling adjusted to compensate for the external temperature … . This computed factor is used to more accurately compute the recovery time for thermal gain or loss when combined with the average normalized thermal gain or loss for the site 1.04.

(Ex. 1004, ¶¶0268, 0295). Here, the thermal gain rate is used to predict changes in temperature inside the structure in response to at least changes in outside temperatures to determine when to begin the recovery process. (Ex. 1002, ¶105).

As a third example, Ehlers uses thermal gain rates to control inside temperature to balance occupant comfort with energy savings. (Ex. 1002, ¶106). The system can use the "thermal gain rate in the site" to control the "ramping rate at which the system 3.08 would permit the temperature to rise within the site 1.04 as it

moved from one set point to a higher or lower one to achieve economic benefit." (Ex. 1004, ¶0255, Fig. 3F)(Ex. 1002, ¶106). Here too, the system predicts that the indoor temperature will rise at a certain rate in view of changes in outside temperatures and controls the behavior of the system accordingly. (Ex. 1002, ¶106).

Ehlers does not explicitly teach that it uses the stored data comprising a plurality of internal temperature measurements taken within a structure and a plurality of outside temperature measurements to compute the disclosed thermal gain rates. (Ex. 1002, ¶107). However, a POSITA would understand that such temperature data would obviously be stored in order for it to be tracked over time and then used to perform the disclosed computations. (Ex. 1002, ¶107)(*see also* claim element [17e] analysis). Indeed, Ehlers provides that information in, for instance, Fig. 3D (shown above).

Thus, a POSITA would have understood that this information was utilized by a computer having one or more processors to performed calculations, for example, the gateway node 1.10D. (Ex. 1004, ¶¶0084, 0171, 0179, 0182, 0268)(Ex. 1002, ¶108). The gateway node's processor communicates with the "memory" both in the gateway node as well as within other nodes in the system and also with the thermostat 1.30D, and would facilitate central computer processing for control of all components within the associated structure. (Ex. 1004, ¶¶0150, 0153-0157)(Ex. 1002, ¶108). To the extent the claim limitation requires a separate processor from

the remote processor discussed with respect to [17c], it was well-known in the art to include multiple processors in a processing device or computer, as claim limitation [17f] recognizes.

> ***"[17g] the one or more computer processors configured to calculate scheduled setpoint programming of the programmable communicating thermostat for one or more times based on the predicted rate of change, the scheduled programming comprising one or more automated setpoints;"***

As explained above under claim element [17f], Ehlers teaches that "the system 3.08" computes various thermal gain rates and then uses those thermal gain rates to perform various computations to manage the system. (*See, e.g.*, Ex. 1004, ¶¶0252-0256). In doing so, the Ehlers's system calculates scheduled setpoint programming of the programmable communicating thermostat for one or more times based on the predicted rate of change, the scheduled programming comprising one or more automated setpoints, or "a computer-calculated temperature setting for a thermostat to achieve or maintain." (Ex. 1002, ¶109). Further, as disclosed in Ehlers, even a setpoint programmed by a user can be adjusted by the computer. (Ex. 1004, ¶256).

As described in the first example under claim element [17f], system 3.08 uses the thermal gain rate to calculate a future setpoint (or automated setpoint) which would not increase HVAC run time. (Ex. 1002, ¶110). Ehlers teaches that such calculations can be done pursuant to a "control program," where a calculated setpoint may be "offset" from a target setpoint by a few degrees in order to reduce

run time." (Ex. 1004, ¶0256)(Ex. 1002, ¶110). This is done so that the run time of the system can be minimized, while the new "calculated" setpoint is reasonably close to what was originally targeted. This control of the system constitutes scheduled setpoint programming of the thermostat for one or more times based on the predicted rate of change. (Ex. 1004, ¶0256)(Ex. 1002, ¶110).

As set forth in the second and third examples described under claim element [17f], system 3.08 uses the thermal gain rates to predict recovery time and/or to control the "ramping rate at which the system 3.08 would permit the temperature to rise within the site 1.04 as it moved from one set point to a higher or lower one to achieve economic benefit." (Ex. 1004, ¶¶0246, 0255, Fig. 3F)(Ex. 1002, ¶111). As Ehlers explains, recovery times can be calculated in connection with managing changes between setpoints for different occupancy modes. (Ex. 1004, ¶¶0246, 0119, 0319, 0324-0325)(*See also, e.g.*, Ex. 1004, ¶0325)("The thermostat scheduling panel 4.36 permits the customer to select the occupancy mode which will be used for various time periods during the day."). For instance, a temperature can be programmed to change from one setpoint to another in anticipation of people getting home from work. (Ex. 1002, ¶111). To do so, the system calculates the time at which "recovery" must begin in order to achieve an "occupied" setpoint by the programmed time. (Ex. 1004, ¶¶0246, 0119, 0319, 0324-0325)(Ex. 1002, ¶111). This type of programming can similarly be used to schedule multiple different

setpoints scheduled for different times (*e.g.*, another automated setpoint for after the occupants have gone to bed). (Ex. 1002, ¶111).

It would be obvious to configure a gateway node to perform the disclosed calculations because it would be more convenient for an energy company to do so. (Ex. 1002, ¶112).

A POSITA would understand from Ehlers's disclosure that the gateway node is a part of "system 3.08" and can be used to perform the claimed calculations. (*See e.g.*, Ex. 1004, ¶¶0268, 0246, 0253-0256)(Ex. 1002, ¶113). For example, gateway nodes are typically a computer supplied by an energy company, whereas thermostats are often installed directly into a house when it is constructed. (Ex. 1002, ¶113). A POSITA would have had a reasonable expectation of success in implementing a system in which the claimed calculations are performed using the gateway node because it would simply be a predictable variation using known technologies. (Ex. 1002, ¶113).

"[17h] at least a database that stores the one or more automated setpoints associated with the scheduled programming for said programmable communicating thermostat;"

Ehlers discloses that "various data elements are stored within the system 1.02, [where] the data may be stored in gateway node 1.10D [including]... . [a] history of temperature set points for the day." (Ex. 1004, ¶¶268-309). Thus, a POSITA would have understood that scheduled programming data described in Ehlers would store

the "scheduled" setpoints in the various nodes. (Ex. 1004, ¶¶0121, 0171, 0145, 0116, 0150, 0157, 0239, 0224, 0268, 0085, 0326)(Ex. 1002, ¶114). Indeed, it would have been obvious to store automated setpoints associated with the scheduled programming for the programmable communicating thermostat so that these setpoints can be implemented according to their scheduled times. (Ex. 1002, ¶114).

Furthermore, a POSITA would have understood that it would have been obvious to utilize a "database" to store the automated setpoints, for example in the memory of the gateway node 1.10D. (*See, e.g.*, Ex. 1004, ¶¶0150, 0153-0157, 0268)(Ex. 1002, ¶115). Databases were widely used to store electronic information and could have been used predictably for that purpose with no unexpected results. (Ex. 1002, ¶115)(*citing* Exs. 1009; 1010; 1011). Numerous types of databases were available in the relevant timeframe and were in use for HVAC control systems. (Ex. 1002, ¶115)(*citing* Ex. 1009, ¶¶0056-0059; Ex. 1010, Abstract, Fig. 2, 9:26-50; Ex. 1011, 1:64-66). A POSITA would understand that multiple databases may be located on the same data structure within, for example, gateway node 1.10D, to store setpoint information. (Ex. 1002, ¶115).

"[17i] at least a database that stores actual setpoint programming of said programmable communicating thermostat; and"

The '550 patent describes "actual setpoint[s] recorded at the thermostat" being compared to "setpoint[s] as scheduled by server 106 according to the standard setpoint programming." (Ex. 1001, 5:54-6:2). Ehlers's system stores, with the

programmable communicating thermostat, actual setpoints of the HVAC system. (Ex. 1002, ¶116). Ehlers teaches that "various data elements are stored [including] ... A history of temperature set points for the day." (Ex. 1004, ¶¶0268, 0278). Ehlers also discloses that "[u]sing the user interface 1.14, the customer may view or generate a variety of reports to view historical information about their homes and the devices 1.08 within" and that such reports "include ... Daily temperature reports displaying temperature and setpoints in, e.g., 15-minute intervals." (Ex. 1004, ¶¶0123-0124).

Ehlers's system also performs "set point pattern change tracking," during which, setpoints are recorded. (Ex. 1002, ¶117). Ehlers explains that the "following data may be maintained or stored by the system 1.02... .

> [0308] 40. Set point pattern change tracking tables to reflect specific day, time and day type setting changes to be used with 'follow my lead' artificial intelligence learning and execution routines.
>
> [0309] 41. Set point pattern change tracking tables to reflect specific outside weather conditions in relationship to set point changes initiated by the occupant for use with the 'follow my lead' artificial intelligence learning and execution routines."

(Ex. 1004, ¶¶0268, 0308, 0309)(Ex. 1002, ¶117). A POSITA would recognize that tracking patterns in changes to setpoints which are "initiated by the occupant" would involve Ehlers system storing actual setpoints of the HVAC system. (Ex. 1002,

¶118). Moreover, it would be obvious to store actual setpoints of the HVAC system in order to facilitate tracking patterns in changes made to setpoints of the HVAC system which are "initiated by the occupant." (Ex. 1004, ¶¶0268, 0308, 0309)(Ex. 1002, ¶118).

Ehlers teaches and/or suggest that the programmable communicating thermostat records the actual setpoints. (Ex. 1004, ¶0253)("FIG. 3d shows two set points for the home 2.18 that the thermostat 1.30D has recorded.")(Ex. 1002, ¶119). Ehlers also teaches that "thermostat 1.30D is a node having a node processor 2.02 [and] memory 2.04." (Ex. 1004, ¶¶0229, 0268)(Ex. 1002, ¶119). Ehlers also teaches that "any node 1.10 in the system may assume the processing and/or the control of one or more devices and/or the storage of system data 1.02." (Ex. 1004, ¶0268). It would be obvious for the thermostat 1.30D to record and store actual setpoints of the HVAC system because the thermostat is the location at which the setpoint is maintained and implemented. (Ex. 1004, ¶¶0116, 0141, 0150, 0155)(Ex. 1002, ¶119). A POSITA would understand that memories of, *e.g.*, thermostat 1.30D or gateway node 1.10D would include multiple collections of data, including for storing setpoint information. (Ex. 1002, ¶119).

As set forth under claim element [17g] above, it is obvious to calculate scheduled programming of the thermostatic controller using Ehlers's gateway node, which is a computer processor. (Ex. 1002, ¶120). It would also be obvious to store

the actual setpoints from Ehlers's thermostat 1.30D (the programmable communicating thermostat) to the gateway node (the database) in order to use them in the computations relating to calculating scheduled programming and detecting manual setpoint changes. (*See, e.g.*, Ex. 1004, ¶¶0150, 0153-0157, 0195)(Ex. 1002, ¶120)

In addition to the reasons set forth above, Ehlers renders this claim limitation obvious for the reasons set forth in claim element [17f]. (Ex. 1002, ¶121).

It is further obvious to store the actual setpoints in a database for later use in computations relating to detecting a manual setpoint change. (*See, e.g.*, Ex. 1004, ¶¶0150, 0153-0157, 0268, 0278, 0281)(Ex. 1002, ¶122).

Similarly, Wruck discloses displaying (and it would be understood to also be storing) setpoint temperatures at Fig. 14P, and adjusting schedule programming and setpoints remotely. (Ex. 1005, ¶0119)(Ex. 1002, ¶123).

"[17j] the one or more computer processors configured to compare the one or more automated setpoints associated with said scheduled setpoint programming with said actual setpoint programming."

Ehlers in view of Wruck renders obvious this limitation. (Ex. 1002, ¶124). First, as set forth under claim element 17[a] and [17i], Ehlers's system can detect a manual change to a setpoint. (Ex. 1004, ¶¶0242-0243, 0268, 0308, 0309)(Ex. 1002, ¶124). A POSITA would have understood that in order to perform the disclosed functions—namely tracking and learning from the user's changes to setpoints,

Ehlers's system would logically detect when a user has made a manual change to the setpoint. (Ex. 1002, ¶124).

Ehlers does not specify the precise manner in which its system detects when a user has manually changed the setpoint. (Ex. 1002, ¶125). However, it would have been obvious to compare the one or more automated setpoints associated with the scheduled setpoint programming with the actual setpoint programming. (Ex. 1002, ¶125). To determine whether two numbers are same or different from each other, a POSITA would have understood that they would be compared. (Ex. 1002, ¶125). In fact, Ehlers's system similarly uses a comparison between values to determine whether to take certain actions. (*See, e.g.*, Ex. 1004, ¶0215)("In one embodiment, this decision may be based on a simple comparison between the actual cost and a predetermined value which may have been input by the customer.")(Ex. 1002, ¶125).

Indeed, Wruck teaches that it was known to compare a user desired setpoint with a calculated setpoint in order to determine if the user has overridden the setpoint programming, and if the difference in setpoints is not equal to zero, display the temporary setpoint. (Ex. 1005, ¶0110)(Ex. 1002, ¶126). Wruck teaches to check whether the "Delta value" between the actual temporary setpoint and the scheduled setpoint is not equal to zero, and if so, to display the temporary setpoint, as shown in table 28, the relevant part of which is shown below, with highlighting added:

TABLE 28

Thermostat Data	Display	Display Dependency	Report Text Description	Comments
version.major	A		FirmwareVersion: 0.0.19	
version.minor				
version.bug				
version.commVer	V		ComVersion: 1	
version.rePgmrVer	V		ReProgrammerVersion:	
status3.subBaseType	A		SubBaseID: T7350D, 3H3C	
subBase.connected	V		CommunicatingSubBase: Yes	
statusAnalog.spaceTemp	A		RoomTemperature: 75 F.	
statusAnalog.dischTemp	D	configured	DischargeAirTemp: 105 F.	config.dischAirSensor
statusAnalog.spaceHumidity	D	configured	Room RH: 33%	config.humiditySensor
statusAnalog.oDTemp	D	configured	OutdoorAir: 25 F.	config.oDAirSensor
statusAnalog.remoteStPtOffset	D	configured	RemoteSetPtOffset: 2 F.	config.remoteSetPoint
statusAnalog.temporarySetPt	D	value < > 0	TemporarySetPt: 76 F.	Display actual temporary setpoint if Delta value < > 0

(Ex. 1005, Table 28, ¶0110)(Ex. 1002, ¶126). A POSITA would have understood that there was no point to displaying a user's manual adjustments if the net result is no change (*e.g.*, pressing the temperature up button once and then pressing the temperature down button once), and thus Wruck tests for an actual change before displaying the setpoint. (Ex. 1002, ¶127). From this, a POSITA would have understood that one could compare (or "analyze to determine one or more similarities or differences between") an actual setpoint and an automated setpoint in order to determine whether the user had entered a manual setpoint that was different from the automated (scheduled) setpoint. (Ex. 1002, ¶128). Thus, to the extent comparing one setpoint to another was not already obvious from Ehlers, it would thus be obvious from Ehlers and Wruck to compare an automated setpoint associated with scheduled setpoint programming with the actual setpoint programming in order to determine whether they are the same or different from each other, and thus detect

a manual change. (Ex. 1002, ¶¶128). Indeed, Ehlers teaches tracking user setpoint changes to learn how the user's desired setpoints differ from the automated setpoints. (Ex. 1004, ¶¶0242-0243, 0268, 0308, 0309)(Ex. 1002, ¶128).

Furthermore, for the same reasons set forth under claim element [17g], it is obvious to perform calculations involved in detecting a manual change to the first automated setpoint, including the claimed "comparing" using the gateway node for the same reasons. (Ex. 1002, ¶129).

CLAIM 18

"18. An apparatus as in claim 17 where said programmable communicating thermostat operates a system for changing the air temperature in a structure."

As set forth under claim elements 17[a] and [17b], Ehlers's system contains thermostat 1.30D. (Ex. 1002, ¶130). Thermostat 1.30D operates a system for changing the air temperature in a structure by operating an HVAC system. (Ex. 1004, Abstract, ¶¶0088, 0090, 0092, 0150, 0191, 0084, 0190, 0231)(Ex. 1002, ¶¶130-131).

CLAIM 19

"19. An apparatus as in claim 17 where said programmable communicating thermostat operates a heating, ventilation and air conditioning system."

As set forth under claims 17 and 18, Ehlers's thermostat 1.30D operates an HVAC system. (Ex. 1002, ¶¶132-133).

CLAIM 20

"20. An apparatus as in claim 17 where said programmable communicating thermostat operates a heating, ventilation and air conditioning system in a single family residence."

As set forth under claims 17-19, Ehlers's thermostat 1.30D (the programmable communicating thermostat) operates an HVAC system in a structure such as a "house" or "home." (Ex. 1002, ¶134)(*see also* Ex. 1004, ¶0190)(describing "an example of the system 1.02 applied to a specific customer site, i.e., a residence or home 2.18"). It is obvious that the system be used in a single family residence because a house or home is a common type of single family residence. (Ex. 1002, ¶135).

CLAIM 21

"21. An apparatus as in claim 20 in which at least one remote processor is in communication with said programmable communicating thermostat."

Ehlers renders this claim limitation obvious for the reasons already set forth above for claim element [17d]. (Ex. 1002, ¶¶136-137)

CLAIM 22

"22. An apparatus as in claim 20 in which said remote processor is not located in the same structure as said programmable communicating thermostat."

As set forth under claim element [17c], gateway node 1.10D is a remote processor. (Ex. 1002, ¶¶138-139).

CLAIM 23

"23. An apparatus as in claim 20 in which said remote processor sets programming for said programmable communicating thermostat."

As set forth under claim element [17g], gateway node 1.10D is a remote processor, and it is obvious for the gateway node to calculate scheduled programming of the programmable communicating thermostat. (Ex. 1002, ¶140). For similar reasons, it is also obvious for the gateway node to set programming for thermostat 1.30D. (*See also* Ex. 1004, ¶¶0109, 0137, 0143, 0147, 0150, 0221)(Ex. 1002, ¶¶140-141).

Ground 2. Claims 17-23 are obvious over Ols '725 in view of Boait and Wruck.

Claims 17-23 are obvious under pre-AIA 35 U.S.C. § 103(a) over U.S. Pat. No. 8,374,725 ("Ols '725")(Ex. 1006) in view of U.K. Patent Application Publication No. GB 2432016 ("Boait")(Ex. 1007) and Wruck.

A. Effective Prior Art Dates

Ols '725 was filed on November 26, 2008, and is therefore prior art under pre-AIA 35 U.S.C. § 102(e).

Boait was published on September 5, 2007, and is therefore prior art under at least pre-AIA 35 U.S.C. § 102(b).

Ols '725 and Boait were not of record during the prosecution of the application leading to the '550 patent.

B. Overview of the Ground

Ols, in combination with Boait and Wruck, renders obvious all elements of the challenged claims. Boait renders obvious, at least, "calculat[ing] scheduled setpoint programming of the programmable communicating thermostat for one or more times based on [a] predicted rate of change," as described in more detail below. Wruck renders obvious, at least, "detecting a manual change" by comparing an automated setpoint and an actual setpoint, as described in more detail below.

1. Overview of Ols '725

Like the '550 patent, Ols describes a HVAC system using a thermostat. (Ex. 1006, 3:16-34, Fig. 1A)(Ex. 1002, ¶147). Ols' thermostats 118 connect to controllers 124, which connect over networks to server 132. (Ex. 1006, 3:16-34, Fig. 1A)(Ex. 1002, ¶147).

Like the '550 patent, Ols's system collects and stores information relevant to conditioning a building, including the indoor temperature (Ex. 1006, 6:30-47), and outdoor temperature (*Id.* at 19:1-24). (Ex. 1002, ¶148). Thermostat 118 of Ols utilizes various temperature setpoints for the HVAC system, where setpoints may be scheduled to reflect desired temperatures at different times of the day, week, month, etc. (Ex. 1006, 22:61-23:7, 31:20-42)(Ex. 1002, ¶148). These setpoints are manually changeable. (Ex. 1006, 31:20-42)(Ex. 1002, ¶148). Thus, a user can "override" a previously scheduled setpoint. (Ex. 1006, 21:5-17)(Ex. 1002, ¶148). Ols teaches that

remote server 132 and/or controllers 124 may be used for entering settings "such as desired temperatures." (Ex. 1006, 8:47-55)(Ex. 1002, ¶148).

Ols also teaches using rates of changes in temperatures. For example, Ols teaches that utilizing "learning from historical data [regarding the change in conditions within the conditioned space], the adjustment to the parameter may be computed to take into account the slower temperature response as a result of the higher load that is normally in the room." (Ex. 1006, 11:53-12:34, 19:1-24)(Ex. 1002, ¶149). Ols teaches that setpoint temperatures 1024 are "computed value[s] to which the temperature of the room is to be set," and that the setpoint temperature 1024 may not be the same as the user desired temperature 1022, based on environmental conditions, "in order to conserve energy and/or to better meet other needs of the system or of that location." (Ex. 1006, 31:20-42)(Ex. 1002, ¶149).

Ols also teaches detecting and implementing a user's manual changes to a setpoint. Specifically, Ols explains that "a user may input a value representing a new desired temperature," where "the new desired temperature value (or another new set point) may be saved by a key press to a button." (Ex. 1006, 31:20-42, 32:21-33)(Ex. 1002, ¶150).

2. Overview of Boait

Boait teaches an electronic control unit for controlling the operation of a central heating system, where "the time settings are determined automatically from

a detection of the user's activity and lifestyle habits." (Ex. 1007, Abstract)(Ex. 1002, ¶151). Boait's system includes "a manual temperature setting device that can be manually activated by an operator to modify at least one of the first and second temperature profiles." (Ex. 1007, 6)(Ex. 1002, ¶151). Boait further discloses "[t]he specific thermal capacity of the house Q (Joules/ C) and the specific heating load L (Watts/ C of temperature difference between the inside and outside of the house) are calculated by the electronic control unit from the gradient of the fall in temperature overnight, and the rise in temperature when the central heating boiler is supplying heat…." (Ex. 1007, 20). Boait discloses both calculating scheduling based on a rate of change as well as detecting manual changes to the scheduling, similar to the '550 patent. (Ex. 1002, ¶151).

3. Overview of Wruck

As discussed in Ground 1, Wruck teaches a thermostat that can be programmed with a schedule to save energy, where the user can enter times of the day when periods of occupancy and non-occupancy begin (Fig. 9G and Fig. 9I), and associated heating and cooling setpoints. (Ex. 1005, Fig. 9F and 9I, ¶0098)(Ex. 1002, ¶152). The user can override scheduled setpoints by making manual setpoint changes. (Ex. 1005, ¶¶0005, 0014-0015, 0104, 0125, 0150, 0198, 0231, Figs. 14s-14z, 20b, Tables 28, 31, 36)(Ex. 1002, ¶153). If the user's temporary setpoint is entered, and the difference between the temporary setpoint and the scheduled

setpoint is not equal to zero, the temporary setpoint is displayed. (Ex. 1005, Table 28, ¶0110)(Ex. 1002, ¶154).

4. Overview of the Combination

A POSITA would have found it obvious to combine Ols and Boait to calculate scheduled setpoint programming based on a predicted rate of change inside the structure in response to changes in outside temperatures. Specifically, Ols explains that learning algorithms may predict a rate of change of temperatures inside the structure in response to particular conditions, including outdoor climate conditions. (Ex. 1006, 19:1-24, 11:53-12:34)(Ex. 1002, ¶155). Boait similarly describes utilizing outside temperature to predict a rate of change of temperature inside the structure, and further teaches that it was known to utilize the predicted rate of change inside, due to temperatures outside, to determine scheduled setpoint programming. (Ex. 1007, 6, 20)(Ex. 1002, ¶155).

Furthermore, a POSITA would have found it obvious to further combine Wruck to provide the known functionality of comparing a user's manually-entered setpoint to an automated setpoint to detect the manual setpoint change. Specifically, Ols explains that a manually entered setpoint may override the automated setpoint. (Ex. 1006, 31:20-42, 32:21-33)(Ex. 1002, ¶156). Wruck provides an example of how the manually entered setpoint override may be determined—by comparing a user desired setpoint with a calculated setpoint—such that if the difference in

setpoints is not equal to zero, the system may display the new setpoint. (Ex. 1005, Table 28, ¶0110)(Ex. 1002, ¶156).

C. *Graham* Factors

The level of ordinary skill is stated above in Sec. V.C. (Ex. 1002, ¶¶23-25).

The scope and content of the prior art are discussed throughout the Ground.

The differences between the prior art and the claims are discussed in the "Overview of the Combination" and in the claim mapping, below.

Petitioner is not aware of any secondary considerations that would make an inference of non-obviousness more likely.

D. Reasonable Expectation of Success

A POSITA in the relevant timeframe would have had a reasonable expectation of success in implementing the combination (as described with particularity below in the claim mapping section) of Ols, Boait, and Wruck. (Ex. 1002, ¶158). As Dr. Auslander explains, the art was relatively predictable in the relevant timeframe (early 2009). (Ex. 1002, ¶158). A POSITA would have been able to make any necessary modifications to implement this Ground. (Ex. 1002, ¶158). This is discussed in more detail in the claim mapping section, where appropriate.

E. Analogous Art

Ols, Boait, and Wruck are in the same field as the '550 patent (building energy management and controls). (Ex. 1001, 1:18-2:17, 3:48-67, claim 17)(Ex. 1006,

Abstract, Title, 3:15-37)(Ex. 1007, Abstract, Title, 1-3)(Ex. 1005, Abstract, Title, ¶¶0002-0008)(Ex. 1002, ¶159). Specifically, these references address controlling heating and cooling systems, implementation of setpoints, and HVAC control in view of outdoor temperatures. (Ex. 1001, claim 1, Abstract, 1:18-2:17, 3:48-67, 4:62-5:42)(Ex. 1005, Abstract, ¶¶0062, 0120, 0183)(Ex. 1006, Abstract, 3:15-37, 18:60-19:24, 22:61-23:7, 36:35-43)(Ex. 1007, Abstract, 1, 5-7)(Ex. 1002, ¶160). *See Wyers v. Master Lock Co*., 616 F.3d 1231, 1238 (Fed. Cir. 2010).

F. Claim Mapping

Independent Claim 17

"***17[a]. An apparatus for detecting manual changes to the setpoint for a thermostatic controller comprising:"***

Ols renders obvious an apparatus for detecting manual changes to the setpoint for a thermostatic controller. (Ex. 1002, ¶162).

First, Ols teaches climate control system 100 that involves managing a thermostatic controller that controls the temperature of a building. (Ex. 1006, 3:15-37)(Ex. 1002, ¶163). The overall system is depicted in Figure 1A below:

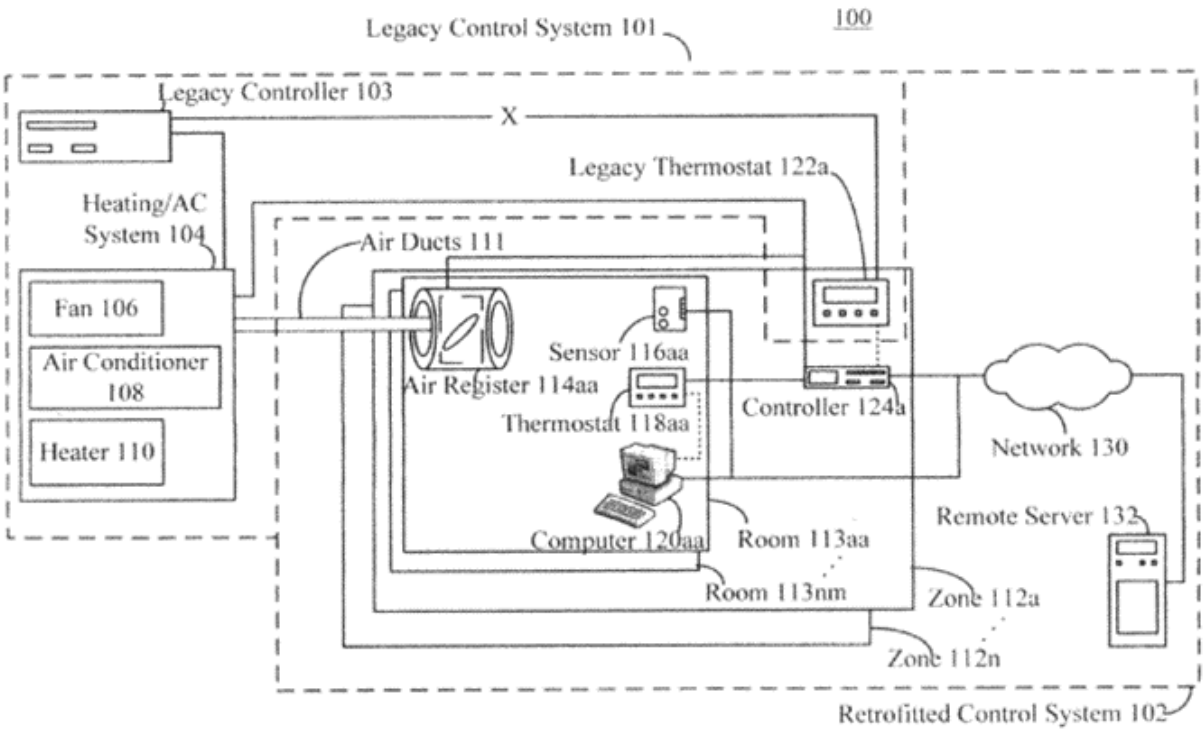

FIG. 1A

(Ex. 1006, Fig. 1A)(Ex. 1002, ¶163). Climate control system 100 integrates with a legacy control system 101 for a Heating/AC system 104, to "regulate temperatures and climate settings for any of a plurality of rooms and/or zones, thereby providing more precise management of temperatures, climates, and/or energy consumption." (Ex. 1006, 3:35-38)(Ex. 1002, ¶164).

As shown in Figure 1A, Ols contains a thermostatic controller ("thermostats 118aa-nm"). (Ex. 1002, ¶165). Controllers 124a-n that "regularly monitor and manage the operations of climate control system 100." (Ex. 1006, 7:53-57)(Ex. 1002, ¶165). The thermostat 118aa-nm contains temperature setpoints for the Heating/AC system, where "Set point temperature 1024 is a computed value to

which the temperature of the room is to be set." (Ex. 1006, 31:20-42)(Ex. 1002, ¶165). This temperature may be different from a "user desired temperature 1022." (Ex. 1006, 31:20-42)(Ex. 1002, ¶165).

Ols teaches recognizing a user override of the setpoint where "[u]pon selecting desired temperature 614 a user may input a value representing a new desired temperature." (Ex. 1006, 31:20-42)(Ex. 1002, ¶166). "[T]he new desired temperature value (or another new set point) may be saved by a key press to a button such as a modifier 620 a-620 c." (Ex. 1006, 31:20-42)(Ex. 1002, ¶166). A POSITA reviewing these disclosures would recognize that in order to save a new desired temperature value setpoint, the Ols system detects when a user has manually changed the setpoint, so as to understand when the save the newly entered setpoint. (Ex. 1002, ¶166). Ols does not specify the precise manner in which its system detects when a user has changed the setpoint. (Ex. 1002, ¶166). However, as set forth below under claim element [17j], it would be obvious to do so by comparing an actual setpoint and an automated setpoint. (Ex. 1002, ¶¶166-167).

"[17b] at least a programmable communicating thermostat;"

As set forth under claim element 17[a], Ols teaches thermostat 118aa-nm, which may be programmed with schedule and temperature selections and communicates with, for example, controller 124a-n. (Ex. 1006, 3:16-34, 24:38-56)(Ex. 1002, ¶¶168-169).

"***[17c] at least a remote processor;"***

Ols describes remote server 132 that "allows control over features of climate control system 100 via network 130." (Ex. 1006, 8:47-55, 40:66-41:27)(Ex. 1002, ¶170). "[R]emote server 132 may perform control functions instead of, or in addition to, controllers 124 a-124n," where "remote server 132 may be used for entering settings (such as desired temperatures) for portions of climate control system 100." (Ex. 1006, 8:47-55)(Ex. 1002, ¶170). A POSITA would recognize that remote server 132 would be implemented using a processor. (Ex. 1002, ¶¶170-171).

"***[17d] at least a network connecting said remote processor and said communicating;"***

Ols describes and/or suggests a network 130 connecting remote server 132 and thermostats 118aa-118nm. (Ex. 1006, 8:47-55, 40:66-41:27)(Ex. 1002, ¶¶172-173).

"***[17e] at least a database comprising a plurality of internal temperature measurements taken within a structure and a plurality of outside temperature measurements relating to temperatures outside the structure;"***

First, Ols explains that "[s]ensors 116 aa-116 nm may monitor the state of a room (e.g. the temperature[)]." (Ex. 1006, 6:30-47, 17:47-50)(Ex. 1002, ¶174). Second, Ols describes "[o]utdoor sensor system 560 is for determining the temperature and/or the humidity of the outside air." (Ex. 1006, 19:1-24)(Ex. 1002, ¶174).

Ols explains that "[t]he most recent measurements of sensors 116 aa-116 nn may be sent to a server for rendering to display devices, and adjustments to the configuration of heating/AC system 104 may be made," (Ex. 1006, 8:22-35), and "[o]ptional memory system 956 may collect data related to climate measurements and readings performed by temperature sensor 952 and humidity sensor 954." (Ex. 1006, 28:50-29:4)(Ex. 1002, ¶175). Memory system 956 connects to sensor 950. (Ex. 1006, 28:43-49)(Ex. 1002, ¶175). Ols further discloses that memory system 900 is part of remote server 132, and "[m]emory system 900 may store and implement settings sent by a user system (e.g. a client system such as one of computers 120 aa-120 nm) associated with system 100." (Ex. 1006, 27:39-46, 31:51-54)(Ex. 1002, ¶176). Based on these disclosures, a POSITA would have understood that memory system 900 receives temperature measurements from sensors 116, and that the measurements are stored in order to perform "adjustment[s] to the configuration of heating/AC system." (Ex. 1002, ¶176). Furthermore, a POSITA would have understood that it would be desirable to transmit and store the outdoor temperature measurements in the memory system 900 of the server 132, to enhance performance of the adjustments to the HVAC system disclosed in Ols. (Ex. 1002, ¶176).

In particular, as set forth in detail under claim element [17f], the system of Ols measures inside temperatures and outside temperatures and utilizes that information to apply learning algorithms that predict a rate of change of temperatures

inside the structure in response to particular conditions, including outdoor climate conditions, with the implementation of programming happening on the server side. (Ex. 1006, 19:1-24)(Ex. 1002, ¶177). Ols' system thus obviously stores data comprising a plurality of inside temperature and outside temperature measurements in this context as well. (Ex. 1002, ¶¶177-178).

> "***[17f]. computer hardware comprising one or more computer processors configured to use the stored data to predict a rate of change of temperatures inside the structure in response to changes in outside temperatures;"***

Ols, alone or in combination with Boait, renders obvious this element. (Ex. 1002, ¶179). Ols describes controller 124 may include learning algorithms that predict a rate of change of temperatures inside the structure in response to particular conditions, including outdoor climate conditions, where "the outdoor climate conditions are used as factors for determining settings and actions to be applied by retrofit control system 102." (Ex. 1006, 19:1-24)(Ex. 1002, ¶179). Specifically, Ols explains that "the processor system of the controller may include a neural net or Turing machine control (such as a conventional feedback loop)," where "[a]s a result of learning from historical data, the adjustment to the parameter may be computed to take into account the slower temperature response as a result of the higher load that is normally in the room"). (Ex. 1006, 11:53-12:34)(Ex. 1002, ¶179). Ols also explains that "[r]emote server 132 may perform control functions instead of, or in addition to, controllers 124a-124n." (Ex. 1006, 8:47-55)(Ex. 1002, ¶179).

A POSITA would have understood from these disclosures that, for instance, the controller 124 may apply learning algorithms from historical data to take into account load conditions that may include outdoor climate conditions, including a change in outside temperature. (Ex. 1002, ¶180). Ols explains that "the outdoor climate conditions are used as factors for determining settings and actions," and that a room load may be high when "for example, the sun is shining the room ... and/or other factors that may be currently present making the room difficult to cool." (Ex. 1006, 19:1-24, 12:14-34)(Ex. 1002, ¶180). A POSITA would have understood that outdoor climate conditions affect the ability to cool a room and could be considered in determining the room load. (Ex. 1002, ¶180). The learning algorithm takes into account the temperature response (or rate of change in the temperature) as a result of load and outdoor climate conditions. (Ex. 1002, ¶180). The system of Ols therefore measures the temperature inside the structure over time, and calculates the temperature response within the structure as a result of conditions that may affect the heating and cooling of the structure, including load conditions and outdoor climate conditions; thus, Ols discloses determining "the difference between inside temperature measurements divided by the span of time between the measurements." (Ex. 1002, ¶181). This determination is a prediction of a rate of change of temperatures inside the structure in response to changes in outside temperatures. (Ex. 1002, ¶181).

Boait also describes utilizing outside temperature to predict a rate of temperature change inside the structure. (Ex. 1002, ¶182). As part of its predictive inference process, Boait monitors "the gradient of the fall in temperature overnight, and the rise in temperature when the central heating boiler is supplying heat." (Ex. 1007, 20)(Ex. 1002, ¶182). From those changes in temperature (and the stored data), Boait uses the below equations to calculate values for "[t]he specific thermal capacity of the house Q (Joules/°C) and the specific heating load L (Watts/°C of temperature difference between the inside and outside of the house)," both of which are properties of the house. (Ex. 1007, 20)(Ex. 1002, ¶182).

$$Q \times \delta Tr = L \times (Tr - Te) \times t$$

when the house is cooling, and

$$Q \times \delta Tr = (H \times t) - (L \times (Tr - Te) \times t)$$

when the house is being heated, where:
Tr is the measured room temperature,
Te is the measured external temperature,
t is the observation interval in which a small change in room temperature δTr takes place, and
H is the boiler heat output in Watts.

Then, Boait uses those calculated values for Q and L to "calculate back from [a] morning start time … the point[] in time that the central heating boiler must start [] providing hot water to the radiators." (Ex. 1007, 20)(Ex. 1002, ¶183). In Boait's example, on "a very cold morning," for a "predicted morning start time" of 6:30

am, the start time is calculated to be 5:45 am, "so that the house has been heated up to the relevant temperature setpoint by the time the predicted morning start time is reached." (Ex. 1007, 20)(Ex. 1002, ¶183).

While Boait states that 5:45 am start time would be calculated in lieu of the originally "predicted" 6:30 am start time based on the listed information, Boait does not explicitly state the formula being used. However, a POSITA would have found it obvious to make that calculation based on the equation shown on page 20 of Boait to reflect a predicted rate of change (*e.g.*, $\delta Tr/t = (H–L\times(Tr–Te))/Q$. (Ex. 1002, ¶184). Indeed, Boait instructs making this calculation ("calculate back") to obtain the revised start time based on the known quantities of H, L, Tr, Te, and Q, making this a routine mathematical exercise. (Ex. 1002, ¶184). This predicted rate of change is "in response to at least changes in outside temperatures" because it is dependent on Te, which is the measured external temperature, and would therefore change as Te changes. (Ex. 1002, ¶184).

At base, Boait teaches improving the accuracy of determining scheduled temperature programming to reach a desired temperature by utilizing outside temperature to predict a rate of change of temperature inside the structure (regardless of the particular formula used). (Ex. 1002, ¶185). Thus, to the extent utilizing outside temperature to predict a rate of change was not already obvious, Boait teaches doing

so, which would have been advantageous to apply to Ols for the purposes described above. (Ex. 1002, ¶185).

Thus, it would be obvious from Ols and Boait to predict a rate of change of temperatures inside the structure in response to changes in outside temperatures. (Ex. 1002, ¶186). Ols teaches learning from historical data to take into account load conditions, and utilizing the learned algorithm to predict a "temperature response," where a POSITA would have understood that load conditions may include outdoor temperature. (Ex. 1006, 11:53-12:34, 19:1-24)(Ex. 1002, ¶186). Boait provides an example of predicting the temperature changes inside the structure in view of changes in outdoor temperature. (Ex. 1007, 20)(Ex. 1002, ¶186).

> "***[17g]. the one or more computer processors configured to calculate scheduled setpoint programming of the programmable communicating thermostat for one or more times based on the predicted rate of change, the scheduled programming comprising one or more automated setpoints;"***

Ols teaches calculating setpoint temperatures, as well as determining "(1) whether to implement directives and settings …[and] (2) when to implement the directives and/or settings." (Ex. 1006, 26:27-48, 31:20-42)(Ex. 1002, ¶187). This alone renders obvious calculating scheduled setpoint programming of the programmable communicating thermostat for one or more times based on the predicted rate of change. (Ex. 1002, ¶187). A POSITA would have understood that doing so could improve the accuracy of determining the most efficient scheduled

temperature programming to reach a desired temperature. (Ex. 1006, 26:27-48)(Ex. 1002, ¶)(Ex. 1002, ¶187). Boait further provides an example of utilizing a predicted rate of change to calculate scheduled setpoint programming. (Ex. 1007, 22, 24)(Ex. 1002, ¶187).

Ols discloses that the climate control system 100 may include code 834 that "include[s] instructions for analyzing (e.g. evaluating and/or comparing) the retrieved values as part of computing (1) whether to implement directives and settings associated with components of system 100 (e.g. a degree of change in settings required to obtain a desired climate), (2) when to implement the directives and/or settings, and (3) how to implement the directives and settings optimally and efficiently." (Ex. 1006, 26:27-48)(Ex. 1002, ¶188). Additionally, Ols explains that "[s]et point temperature 1024 is a computed value to which the temperature of the room is to be set." (Ex. 1006, 31:20-42)(Ex. 1002, ¶188).

A POSITA would have understood in view of these disclosures that the climate control system 100 may implement code 834 using a computer processor to use the predicted rate of change discussed with regards to claim element [17f] in order to determine when to implement a "change in settings required to obtain a desired climate." (Ex. 1002, ¶189). It would have been obvious to utilize a calculated temperature response in order to determine a change in settings for cooling a room,

because the temperature response would indicate when to implement heating or cooling intervention to reach a desired temperature. (Ex. 1002, ¶189).

Furthermore, a POSITA would have understood that the setting changes in Ols include calculating a schedule of automated setpoints. (Ex. 1002, ¶190). Ols discloses that "set point temperature[s] 1024 [are] a computed value to which the temperature of the room is to be set." (Ex. 1006, 31:20-42)(Ex. 1002, ¶190). A POSITA would have understood that setpoint temperatures 1024 includes a plurality of computed values so as to provide a schedule of operation for the climate control system 100. (Ex. 1002, ¶190). It would have been obvious to utilize the determined predicted rate of change as a factor in "computing" a schedule of automated setpoints, or "a computer-calculated temperature setting for a thermostat to achieve or maintain." (Ex. 1002, ¶190).

Furthermore, Boait explains that it was known in the art to utilize the predicted rate of change of inside temperature to determine scheduled setpoint programming. (Ex. 1002, ¶191). Boait explains that after determining the specific thermal capacity of the house Q and the current heat load (Lx (Tr-Te)), a "temperature setpoint at any particular instant in time can then be derived directly from the applicable time-varying temperature profile and used by the various inference and control processes." (Ex. 1007, 20-21)(Ex. 1002, ¶191). This "temperature profile" is a computer-generated setting in that it requires a computer look-up feature and also

has a learning adjustment that occurs "[i]f either the ON and OFF buttons 6 and 8 are operated regularly at the same time of the day (as recognized by the predictive inference process," which is also a computer process. (Ex. 1007, 22). The computer can make a further adjustment to the temperature profile "depending on the air temperature outside the house." (Ex. 1007, 22). Figure 10 illustrates the temperature setpoint generation as the computer-implemented steps of "shape temperature profile from user input" and "select operating setpoint Ts from Te, time and profile table for current state." (Ex. 1007, Fig. 10)(Ex. 1002, ¶191).

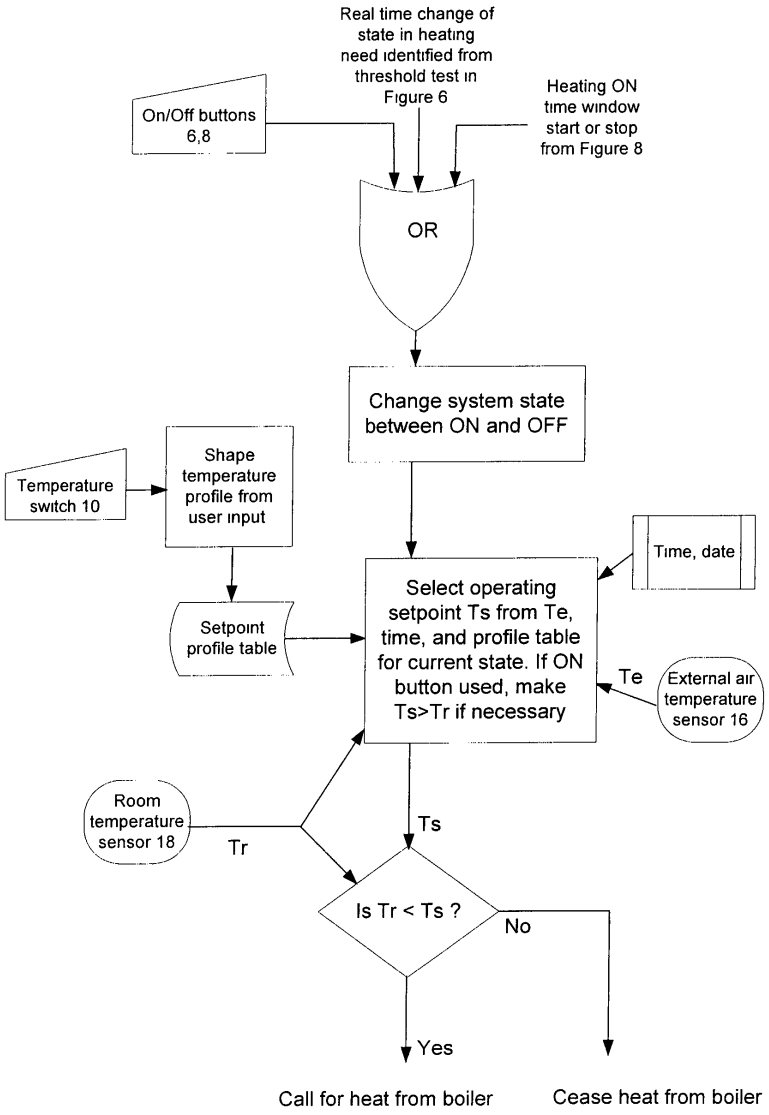

Figure 10

Boait further discloses that the actual run-time is subject to hysteresis (via computer implementation) based on the thermal capacity Q (which is itself calculated from a rate of change, or an obvious variant): "In practice, there will be some hysteresis (that is slightly different values of temperature setpoint for starting and stopping the heating command) dependent on the specific thermal capacity of the house Q and the minimum running time specified by the central heating boiler manufacturer so

that the central heating boiler always runs for an efficient time interval." (Ex. 1007, 24)(Ex. 1002, ¶192).

Thus, to the extent determining scheduled programming based on a predicted a rate of change was not already obvious, Boait teaches doing so in a similar context. (Ex. 1002, ¶193).

> "***[17h] at least a database that stores the one or more automated setpoints associated with the scheduled programming for said programmable communicating thermostat;"***

Ols discloses that setpoint temperature 1024, discussed above with respect to limitation [17h] as rendering obvious automated setpoints that make up scheduled programming, "may be part of code 834 and/or code 904 associated with computer 800 and/or memory system 900 of remote server 132." (Ex. 1006, 31:43-32:20)(Ex. 1002, ¶194). Ols therefore renders obvious that setpoint temperatures may be stored in memory on computer 120 or remote server 132. (Ex. 1002, ¶194). Similarly, Boait discloses that the determined temperature profile can be "used by various inference and control processes." (Ex. 1007, 21)(Ex. 1002, ¶194). A POSITA would have understood that the temperature profile would be stored in a database in order for it to be used by various inference and control processes. (Ex. 1002, ¶194). A POSITA would understand that the memories of, *e.g.*, computer 120 or remote server 132 would store multiple data collections, including for storing setpoint information. (Ex. 1002, ¶194).

"[17i. at least a database that stores actual setpoint programming of said programmable communicating thermostat; and"

The '550 patent describes "actual setpoint[s] recorded at the thermostat" being compared to "setpoint[s] as scheduled by server 106 according to the standard setpoint programming." (Ex. 1001, 5:54-6:2). Ols describes that a user may input a value representing a new desired temperature, where the new desired temperature value "may be saved," and also displayed. (Ex. 1006, 21:5-17)(Ex. 1002, ¶195). A POSITA would have understood that in order to save and display the user desired temperature, the climate control system 100 would store the actual setpoint programming of the thermostat in a memory/database. (Ex. 1002, ¶195). It is further obvious to store the actual setpoints in the memory, for example, in the memory of the thermostat 118, or memory on computer 120 or remote server 132, for later use in computations relating to detecting a manual setpoint change. (Ex. 1006, 21:5-17)(Ex. 1002, ¶195). A POSITA would understand that multiple databases may be located on the same data structure within, for example, thermostat 118, computer 120, or remote server 132, to store setpoint information. (Ex. 1002, ¶195).

"[17j] the one or more computer processors configured to compare the one or more automated setpoints associated with said scheduled setpoint programming with said actual setpoint programming."

Ols in view of Wruck renders obvious this claim element. (Ex. 1002, ¶197). First, as set forth under claim element 17[a], Ols' system detects a manual change to a setpoint. (Ex. 1006, 31:20-42)(Ex. 1002, ¶197). Ols teaches recognizing a user

override of the setpoint where "[u]pon selecting desired temperature 614 a user may input a value representing a new desired temperature." (Ex. 1006, 31:20-42)(Ex. 1002, ¶197). A POSITA would have understood that to save a new user desired temperature, a processor in, for example, computer 120, would determine when a user has manually changed the setpoint to be different from what was previously programmed. (Ex. 1002, ¶197).

Ols does not detail the manner in which its system compares a user's change to what had been set. (Ex. 1002, ¶197). However, it is obvious to compare (or "analyze to determine one or more similarities or differences between") the one or more automated setpoints associated with said scheduled setpoint programming with said actual setpoint programming. (Ex. 1002, ¶198). To save a new desired user temperature, the system disclosed in Ols would need to determine whether two numbers are the same or different from each other, which indicates a comparison. (Ex. 1002, ¶198).

As established in the previous ground, Wruck teaches determining whether a user's manually-entered setpoint differs from a scheduled setpoint by comparing an actual temporary setpoint and a scheduled setpoint, as shown in table 28, the relevant part of which is shown below, with highlighting added:

TABLE 28

Thermostat Data	Display	Display Dependency	Report Text Description	Comments
version.major	A		FirmwareVersion: 0.0.19	
version.minor				
version.bug				
version.commVer	V		ComVersion: 1	
version.rePgmrVer	V		ReProgrammerVersion:	
status3.subBaseType	A		SubBaseID: T7350D, 3H3C	
subBase.connected	V		CommunicatingSubBase: Yes	
statusAnalog.spaceTemp	A		RoomTemperature: 75 F.	
statusAnalog.dischTemp	D	configured	DischargeAirTemp: 105 F.	config.dischAirSensor
statusAnalog.spaceHumidity	D	configured	Room RH: 33%	config.humiditySensor
statusAnalog.oDTemp	D	configured	OutdoorAir: 25 F.	config.oDAirSensor
statusAnalog.remoteStPtOffset	D	configured	RemoteSetPtOffset: 2 F.	config.remoteSetPoint
statusAnalog.temporarySetPt	D	value < > 0	TemporarySetPt: 76 F.	Display actual temporary setpoint if Delta value < > 0

(Ex. 1005, Table 28, ¶0110)(Ex. 1002, ¶199). Wruck teaches to check whether the "Delta value" between the actual temporary setpoint and the scheduled setpoint is not equal to zero, and if so, to display the temporary setpoint. (Ex. 1002, ¶200). Thus, to the extent detecting a manual change by comparing the actual setpoint to the automated setpoint was not already obvious from Ols, Wruck teaches doing so. This technique would have been advantageous to apply to Ols for the purposes described above. (Ex. 1002, ¶200). At the very least, Wruck teaches doing so to determine when to change the display. (Ex. 1002, ¶¶200-201).

CLAIM 18

"18. An apparatus as in claim 17 where said programmable communicating thermostat operates a system for changing the air temperature in a structure."

As set forth under claim elements 17[a] and [17b], Ols' thermostats 118aa-nm operates a system for changing the air temperature in a structure. (Ex. 1002, ¶¶202-203). Specifically, the thermostats 118aa-nm operates "heating/AC system 104,

which includes fan 106, air condition 108 and heater 110." (Ex. 1006, 3:16-34)(Ex. 1002, ¶202).

CLAIM 19

"19. An apparatus as in claim 17 where said programmable communicating thermostat operates a heating, ventilation and air conditioning system."

As set forth under claims 17 and 18, Ols' thermostat 118 (the programmable communicating thermostat) operates an HVAC system. (Ex. 1002, ¶¶204-205).

CLAIM 20

"20. An apparatus as in claim 17 where said programmable communicating thermostat operates a heating, ventilation and air conditioning system in a single family residence."

Ols' thermostat 118 operates an HVAC system in a structure such as a "home." (Ex. 1006, 22:56-60)(Ex. 1002, ¶206). A POSITA would have understood that the disclosed home could be a single-family residence. (Ex. 1002, ¶¶206-207).

CLAIM 21

"21. An apparatus as in claim 20 in which at least one remote processor is in communication with said programmable communicating thermostat."

See claim element [17d], above. (Ex. 1002, ¶¶208-209). Specifically, remote server 132 is a remote processor that is in communication with thermostats 118. (Ex. 1006, 8:47-55, 40:66-41:27)(Ex. 1002, ¶208).

CLAIM 22

"22. An apparatus as in claim 20 in which said remote processor is not located in the same structure as said programmable communicating thermostat."

As set forth under claim 21, remote server 132 is a remote processor. (Ex. 1002, ¶210). The remote server 132 is described as being "remote," and additionally is connected to thermostats 118 via a network 130. (*See, e.g.*, Ex. 1006, 8:47-55)(Ex. 1002, ¶210). A POSITA would have understood that the remote server 132 could be situated at a different location than the thermostats 118 (the programmable communicating thermostat). (Ex. 1002, ¶¶210-211).

CLAIM 23

"23. An apparatus as in claim 20 in which said remote processor sets programming for said programmable communicating thermostat."

As set forth under claim element 21, remote server 132 is a remote processor in communication with thermostats 118. (Ex. 1002, ¶212). Ols explains that the remote server 132 may provide code 834, where the code "include[s] instructions for analyzing (e.g. evaluating and/or comparing) the retrieved values as part of computing (1) whether to implement directives and settings associated with components of system 100 (e.g. the positions of the air registers 114 aa-114 nm, the on/off state of devices within heating/AC system 104, and a degree of change in settings required to obtain a desired climate), (2) when to implement the directives and/or settings, and (3) how to implement the directives and settings optimally and

efficiently." (Ex. 1006, 26:27-48)(Ex. 1002, ¶212). A POSITA would have understood that the remote server 132 of Ols therefore calculates scheduled programming of the programmable communicating thermostat. (Ex. 1002, ¶¶212-213).

VI. MANDATORY NOTICES

NOTICE OF LEAD AND BACKUP COUNSEL

Lead Counsel	**Backup Counsel**
Matthew A. Smith Reg. No. 49,003 SMITH BALUCH LLP 700 Pennsylvania Ave. SE Second Floor Washington, D.C. 20003 (202) 669-207 smith@smithbaluch.com	Elizabeth Laughton Reg. No. 70,484 SMITH BALUCH LLP 700 Pennsylvania Ave. SE Second Floor Washington, D.C. 20003 (703) 585-8839 laughton@smithbaluch.com

NOTICE OF THE REAL-PARTIES-IN-INTEREST

The real-party-in-interest for this petition is Google LLC.

NOTICE OF RELATED MATTERS

The '550 patent has been asserted in the following litigations:

- *Emerson Electric Co. v. EcoFactor, Inc.*, 1-21-cv-00317 (D. Del. Mar. 1, 2021) (voluntarily terminated);
- *Google, LLC f/k/a Google Inc. v. EcoFactor, Inc.*, 3-21-cv-01468 (N.D. Cal. March 1, 2021);

- *ecobee, Inc. v. EcoFactor, Inc.*, 1-21-cv-00323 (D. Del. March 2, 2021);
- *Carrier Global Corp. v. EcoFactor, Inc.*, 1-21-cv-00328 (D. Del. March 3, 2021) (voluntarily terminated);
- *EcoFactor, Inc. v. Google, LLC*, 6-22-cv-00350 (W.D. Tex. April 1, 2022) (voluntarily terminated);
- *Certain Smart Thermostat Systems, Smart HVAC Systems, Smart HVAC Control Systems, And Components Thereof*, Inv. No. 337-TA-1258 ("*Certain Smart Thermostat Systems*") (terminated).

The following cases are pending before the Board involving the '550 patent:

- *ecobee Technologies, ULC., v. EcoFactor, Inc.*, IPR2022-00969.
- *ecobee Technologies, ULC., v. EcoFactor, Inc.*, IPR2022-00983.

This Petition is being submitted concurrently with a Motion for Joinder. Specifically, Petitioner requests institution and joinder with IPR2022-00969, which the Board instituted on November 15, 2022. Petitioner has spoken with counsel of record for ecobee, and ecobee does not oppose joinder to the IPR2022-00969 petition.

Whereas the present Petition is a "me-too" or "copycat" petition, wherein Petitioner agrees to assume a "passive understudy role," the *General Plastic* factors

are "effectively neutraliz[ed]." *Apple Inc. v. Uniloc 2017 LLC.*, IPR2018-00580, Paper 13 at 10 (Aug. 21, 2018). Therefore the present Petition should be granted.

NOTICE OF SERVICE INFORMATION

Please address all correspondence to the lead counsel at the addresses shown above. Petitioner consents to electronic service by email at: smith@smithbaluch.com; laughton@smithbaluch.com.

GROUNDS FOR STANDING

Petitioner hereby certifies that the patent for which review is sought is available for *inter partes* review, and that the Petitioner is not barred or estopped from requesting an *inter partes* review on the grounds identified in the petition. In this regard it is noted that the Petition is being accompanied by a joinder motion. Thus, the time limit for filing a Petition for *inter partes* review of 37 C.F.R. § 41.101(b) and 35 U.S.C. § 315(b) do not apply. 37 C.F.R. § 42.122(b); 35 U.S.C. § 315(b).

VII. CONCLUSION

Petitioner respectfully requests that claims 17-23 of the ’550 patent be canceled.

Date: December 15, 2022	/*Matthew A. Smith*/ (RN 49,003) Matthew A. Smith SMITH BALUCH LLP 700 Pennsylvania Ave. SE Second Floor Washington, D.C. 20003 smith@smithbaluch.com *Counsel for Petitioner Google LLC*

CERTIFICATE OF SERVICE

The undersigned hereby certifies that the foregoing petition for *inter partes* review, together with all exhibits and other documents filed therewith, was served by Priority Mail Express on December 14, 2022, on the Patent Owner's counsel of record at the United States Patent and Trademark Office having the following address:

Tanner IP, PLLC
149 West Gilpin Avenue
Norfolk, VA 23503
UNITED STATES

Courtesy copies of the above-mentioned documents were also provided to counsel of record for Patent Owner in IPR2022-00969 via email correspondence to the following recipients:

pwang@raklaw.com

jlink@raklaw.com

rmirzaie@raklaw.com

kdavis@raklaw.com

rak_ecofactor@raklaw.com

Date: December 15, 2022

/Matthew A. Smith/
Matthew A. Smith
(Reg. No. 49,003)

CERTIFICATE OF WORD COUNT

The undersigned hereby certifies that the foregoing petition for *inter partes* review contains 13,579 words according to the word processing program used to prepare it.

Date: December 15, 2022

/Matthew A. Smith/
Matthew A. Smith
(Reg. No. 49,003)