UNITED STATES PATENT AND TRADEMARK OFFICE

BEFORE THE PATENT TRIAL AND APPEAL BOARD

GOOGLE LLC,
Petitioner,

v.

FLYPSI, INC. (D/B/A FLYP),
Patent Owner.

Case No. IPR2023-00357
U.S. Patent No. 11,218,585

PATENT OWNER FLYPSI, INC.'S NOTICE OF APPEAL

Pursuant to 35 U.S.C. §§ 141(c) and 319 and 37 C.F.R. § 90.2(a), Patent Owner Flypsi, Inc. hereby provides notice that it appeals to the United States Court of Appeals for the Federal Circuit from the Final Written Decision entered July 26, 2024, (Paper No. 33), and from all underlying orders, decisions, rulings, and opinions relating to U.S. Patent No. 11,218,585 set forth in Inter Partes Review IPR2023-00357.

In accordance with 37 C.F.R. § 90.2(a)(3)(ii), the issues on appeal include, but are not limited to:

- The Board's determination that claims 1, 2, and 4 are unpatentable as obvious under 35 U.S.C. § 103 based on Backhaus and Taylor;
- The Board's determination that claim 3 is unpatentable as obvious under 35 U.S.C. § 103 based on Backhaus, Saksena, and Taylor;
- The Board's determinations underlying the above findings, including that Backhaus teaches "automatically transmitting information that indicates an access telephone number to the mobile device via a data channel" as claimed, the Board's decision not to construe "data channel," that a person of ordinary skill in the art would be motivated to combine Backhaus and Taylor, and that Taylor's PSTN interface qualifies as the claimed "switch";

- The Board's improper consideration of arguments and evidence outside the scope of the Petition and arguments not supported by evidence in the record;
- Any other issues decided adversely to Patent Owner in an order, decision, ruling, or opinion underlying or supporting the Board's final written decision.

A copy of the decision being appealed is attached to this Notice.

Pursuant to 35 U.S.C. § 142 and 37 C.F.R. § 90.2(a), this Notice is being filed with the Director of the United States Patent and Trademark Office, and a copy of this Notice is being concurrently filed with the Patent Trial and Appeal Board. In addition, a copy of this Notice and the required docketing fees are being filed with the Clerk's Office for the United States Court of Appeals for the Federal Circuit via CM/ECF.

Dated: September 27, 2024

/s/ Louis L. Campbell
Louis L. Campbell (Reg. No. 59,963)
WINSTON & STRAWN LLP
255 Shoreline Dr., Ste. 520
Redwood City, CA 94065
llcampbell@winston.com
T: 650.858.6500, F: 650.858.6550

Lead Counsel for Patent Owner Flypsi, Inc. (d/b/a Flyp)

CERTIFICATE OF SERVICE

The undersigned hereby certifies that the foregoing PATENT OWNER FLYPSI, INC.'S NOTICE OF APPEAL was served electronically via email on September 27, 2024, in its entirety on the following counsel of record:

Naveen Modi (Reg. # 46,224)
Joseph E. Palys (Reg. # 46,508)
Daniel Zeilberger (Reg. # 65,349)
Howard Herr (*pro hac vice approved*)
Puja Patel (*pro hac vice approved*)
PAUL HASTINGS LLP
2050 M St NW
Washington, D.C. 20036
Telephone: (202) 551-1700
Fax: (202) 551-1705
PH-Google-Flypsi-IPR@paulhastings.com
naveenmodi@paulhastings.com
josephpalys@paulhastings.com
danielzeilberger@paulhastings.com
howardherr@paulhastings.com
pujapatel@paulhastings.com

Dated: September 27, 2024

/s/ Louis L. Campbell
Louis L. Campbell (Reg. No. 59,963)
WINSTON & STRAWN LLP
255 Shoreline Dr., Ste. 520
Redwood City, CA 94065
llcampbell@winston.com
T: 650.858.6500, F: 650.858.6550

Lead Counsel for Patent Owner Flypsi, Inc. (d/b/a Flyp)

Trials@uspto.gov
571-272-7822

Paper 33
Entered: July 26, 2024

UNITED STATES PATENT AND TRADEMARK OFFICE

BEFORE THE PATENT TRIAL AND APPEAL BOARD

GOOGLE LLC,
Petitioner,

v.

FLYPSI, INC.,
Patent Owner.

IPR2023-00357
Patent 11,218,585 B2

Before ROBERT J. WEINSCHENK, JAMES J. MAYBERRY, and MICHAEL T. CYGAN, *Administrative Patent Judges*.

WEINSCHENK, *Administrative Patent Judge*.

JUDGMENT
Final Written Decision
Determining All Challenged Claims Unpatentable
35 U.S.C. § 318(a)

I. INTRODUCTION

A. Background and Summary

Google LLC ("Petitioner") filed a Petition (Paper 1, "Pet.") requesting an *inter partes* review of claims 1–4 ("the challenged claims") of U.S. Patent No. 11,218,585 B2 (Ex. 1001, "the '585 patent"). Flypsi, Inc. ("Patent Owner") filed a Preliminary Response (Paper 6, "Prelim. Resp.") to the Petition. We instituted an *inter partes* review of the challenged claims on July 31, 2023. Paper 9 ("Dec. on Inst."), 21. After institution, Patent Owner filed a Response (Paper 21, "PO Resp.") to the Petition, Petitioner filed a Reply (Paper 24, "Pet. Reply") to the Response, and Patent Owner filed a Sur-reply (Paper 26, "PO Sur-reply") to the Reply. We held an oral hearing on May 7, 2024, and a transcript of the hearing is included in the record. Paper 32 ("Tr.").

For the reasons set forth below, Petitioner has shown by a preponderance of the evidence that claims 1–4 of the '585 patent are unpatentable.

B. Real Parties in Interest

The parties identify themselves as the only real parties in interest. Pet. 1; Paper 12, 2.

C. Related Matters

The parties indicate that the '585 patent is the subject of the following district court cases: 1) *Flypsi, Inc. (d/b/a Flyp) v. Google LLC*, No. 6:22-cv-00031 (W.D. Tex.); and 2) *Flypsi, Inc. (d/b/a Flyp) v. Dialpad, Inc.*, No. 6:21-cv-00642 (W.D. Tex.). Pet. 1; Paper 12, 2. The parties also indicate that patents related to the '585 patent are the subject of petitions for *inter partes* review in IPR2022-01048, IPR2022-01049, IPR2022-01050,

IPR2022-01051, IPR2023-00358, IPR2023-00359, IPR2023-00360, and IPR2023-00361. Pet. 2; Paper 12, 2–3.

D. The '585 Patent

The '585 patent relates to "providing telephone service by transmitting call handling information between a handset and a switch using an [Internet Protocol ('IP')] channel or similar protocol channel and by transmitting a voice call associated with the call handling information between the handset and the switch using a voice channel." Ex. 1001, 1:55–64. Figure 3 of the '585 patent is reproduced below.

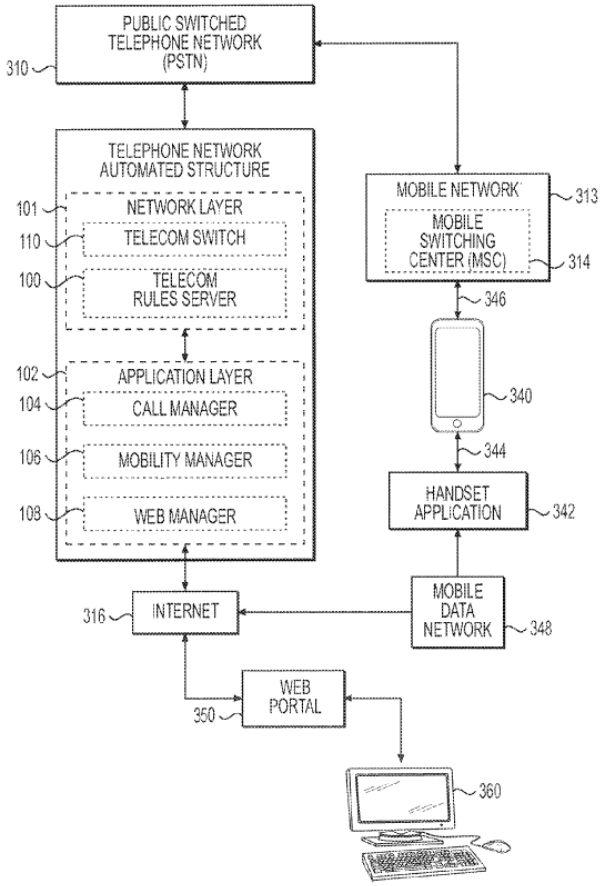

FIG. 3

Id. at Fig. 3. Figure 3 shows server 100 and telephone handset 340. *Id.* at 4:27–32. According to the '585 patent, server 100 and handset 340 may

communicate via Internet 316 (i.e., a data channel) and via Public Switched Telephone Network ("PSTN") 310 (i.e., a voice channel). *Id.* at 4:49–60.

The '585 patent explains that handset 340 transmits information to server 100 via Internet 316 requesting that one or more secondary telephone numbers be associated with the primary telephone number assigned to handset 340 at activation. *Id.* at 5:11–22. To place an outgoing call, handset 340 transmits information to server 100 via Internet 316 selecting one of the aforementioned secondary numbers as the origination number and selecting a contact number to be called. *Id.* at 7:42–58. In response, server 100 transmits a bridge number to handset 340 via Internet 316. *Id.* at 7:59–8:2. Handset 340 then calls the bridge number via PSTN 310, and switch 110 connects the outgoing call from handset 340 to the contact number via PSTN 310. *Id.* at 8:21–38. Switch 110 sends information to the contact number that "causes the secondary telephone number [of handset 340] to be displayed as the number from which the call appears to have been placed." *Id.* at 8:38–42.

E. Illustrative Claim

Of the challenged claims, claim 1 is independent and is reproduced below.

> 1. A method of providing telephone service, comprising:
>
> automatically storing electronic information that indicates an association of a secondary telephone number and a primary telephone number with a mobile device in a computer memory associated with a server;
>
> automatically transmitting information that indicates an access telephone number to the mobile device via a data channel;

> automatically associating a primary telephone number and access telephone number pairing with a corresponding secondary telephone number and contact telephone number pairing in the computer memory;
>
> receiving, at a switch associated with the server, an outgoing call from the mobile device to the access telephone number via a second channel;
>
> receiving, at the server, information from the switch indicating the outgoing call is being made to the access telephone number from the primary telephone number; and
>
> receiving, at the switch, information from the server directing the switch to:
>
> > (a) connect the outgoing call to the contact telephone number of the secondary telephone number and contact telephone number pairing, and
> >
> > (b) identify a telephone number from which the outgoing call is being made as the secondary telephone number.

Ex. 1001, 10:14–40.

F. Evidence

Petitioner submits the following evidence:

Evidence	Exhibit No.
Declaration of Dr. Bill Lin ("Lin Declaration")	1002
Backhaus, US 2013/0295892 A1, published Nov. 7, 2013 ("Backhaus")	1005
Taylor, US 2009/0052437 A1, published Feb. 26, 2009 ("Taylor")	1007
Saksena, US 2006/0077956 A1, published Apr. 13, 2006 ("Saksena")	1008

Patent Owner submits the Declaration of Dr. Robert Akl. Ex. 2010 ("Akl Declaration").

G. Asserted Grounds

Petitioner asserts that the challenged claims are unpatentable on the following grounds:

Claim(s) Challenged	35 U.S.C. §	Reference(s)/Basis
1, 2, 4	102	Backhaus
3	103	Backhaus, Saksena
1, 2, 4	103	Backhaus, Taylor
3	103	Backhaus, Saksena, Taylor

II. ANALYSIS

A. Legal Standards

A claim is anticipated if each limitation of the claim is disclosed in a single prior art reference arranged as in the claim. *Net MoneyIN, Inc. v. VeriSign, Inc.*, 545 F.3d 1359, 1369 (Fed. Cir. 2008). A claim is unpatentable as obvious under 35 U.S.C. § 103(a) if the differences between the claimed subject matter and the prior art are such that the subject matter as a whole would have been obvious at the time the invention was made to a person having ordinary skill in the art to which the subject matter pertains. *KSR Int'l Co. v. Teleflex Inc.*, 550 U.S. 398, 406 (2007). The question of obviousness is resolved on the basis of underlying factual determinations, including 1) the scope and content of the prior art; 2) any differences between the claimed subject matter and the prior art; 3) the level of ordinary skill in the art; and 4) any objective indicia of non-obviousness. *Graham v. John Deere Co.*, 383 U.S. 1, 17–18 (1966).

B. Level of Ordinary Skill in the Art

Petitioner argues that a person of ordinary skill in the art would have had "an undergraduate degree in electrical engineering, computer engineering, computer science or a related field along with two years of work experience in the field of telecommunication." Pet. 4–5 (citing Ex. 1002 ¶¶ 17–18). Patent Owner does not dispute Petitioner's description. PO Resp. 5. We adopt Petitioner's description for purposes of this Decision.

C. Claim Construction

In an *inter partes* review proceeding, a patent claim is construed using the same standard used in a civil action under 35 U.S.C. § 282(b), including construing the claim in accordance with the ordinary and customary meaning of the claim as understood by one of ordinary skill in the art and the prosecution history pertaining to the patent. 37 C.F.R. § 42.100(b).

Patent Owner proposes construing the term "channel" in all challenged claims to refer to "[a] channel [that] does not have to be fully connected on both ends or actually transmitting a particular type of information to qualify as a channel." PO Resp. 6. Petitioner asserts that Backhaus teaches transmitting an access telephone number via a data channel in two ways. Pet. 22–26. We rely only on the "second way" for purposes of this Decision. *See* Section II.D.3; Pet. 25–26. Patent Owner's proposed construction of the term "channel" does not impact the parties' dispute about the "second way" that Backhaus teaches transmitting an access telephone number via a data channel. PO Resp. 21–23; PO Sur-reply 11;

Tr. 10:2–11, 68:3–24.[1] Therefore, we determine that the term "channel" does not require an express construction to resolve the parties' disputes regarding the asserted grounds of unpatentability.

D. Obviousness of Claims 1, 2, and 4 over Backhaus and Taylor

Petitioner argues that claims 1, 2, and 4 would have been obvious over Backhaus and Taylor. Pet. 8–45, 50–54. For the reasons discussed below, Petitioner has shown by a preponderance of the evidence that claims 1, 2, and 4 would have been obvious over Backhaus and Taylor.

1. Overview of Backhaus

Backhaus describes a system "for providing a second line service to a user of Subscriber Telecommunications Device ('TD') 110." Ex. 1005 ¶ 31. Backhaus's Figure 1 is reproduced below.

[1] Patent Owner argues that we should still address its proposed construction of the term "channel" because it "significantly impacts the credibility" of Petitioner's declarant, Dr. Bill Lin. Tr. 68:3–24. We disagree. As discussed in more detail below, the portions of the Lin Declaration that we rely on in this Decision are credible because those portions are consistent with and supported by the other evidence of record. *See* Section II.G.

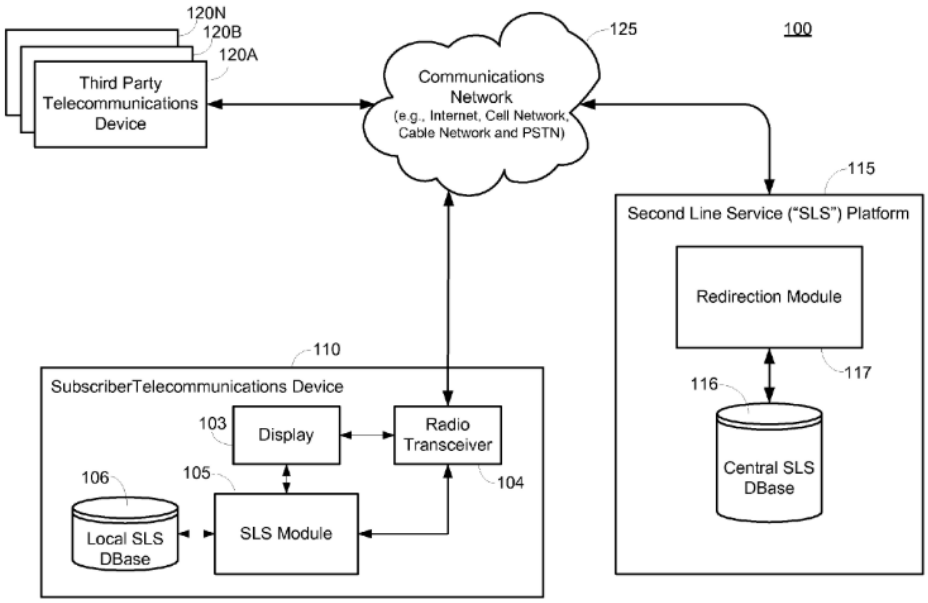

FIG. 1

Id. at Fig. 1. Figure 1 shows system 110 in which "[a] subscriber to a second line service ('SLS') . . . may receive calls at [subscriber] TD 110 that are directed to either of the primary phone number provided by the primary service provider or the secondary phone number ('SLS phone number') provided, serviced and or facilitated by the SLS platform 115." *Id.* ¶ 31. System 100 also allows subscriber TD 110 to place a call to third party TD 120A from the SLS phone number. *Id.* ¶ 58. "For each subscriber to the SLS service, a Subscriber Relationship ID Table 310 is . . . maintained" that includes "relationship numbers . . . used to facilitate calls between the subscriber's TD 110 . . . and the SLS platform 115." *Id.* ¶ 45.

As an example, "Subscriber #1 associated with subscriber TD 110 already has mobile phone service via primary service provider 201 using mobile phone number 1.408.544.1212" and "subsequently subscribes to an SLS service provided by way of SLS platform 115 and is assigned SLS

number (i.e., a second line number) 1.770.555.0001." *Id.* ¶ 50. "Subscriber #1 desires to originate a call to third party associated with 1.305.229.9999 from his SLS number 1.770.555.0001." *Id.* ¶ 58. To do so, subscriber TD 110 "queries Subscriber Relationship ID Table 315 in local SLS database 106 and translates the called third party number 1.305.229.9999 to relationship number 1.678.222.0001." *Id.* ¶ 59.

"By calling the relationship number . . . , the network 125 routes the call to the SLS platform 115 instead of directly to third party TD 120A." *Id.* "When the SLS platform 115 processes this first leg of the call," it "[q]uer[ies] the Subscriber Relationship ID Table 310 in central SLS database 116" and "appl[ies] the following logic: 'when primary number 1.408.544.1212 calls relationship number 1.678.222.0001, it is actually SLS number 770.555.0001 calling 1.305.229.9999.'" *Id.* ¶ 60. "[I]n completing the second leg of the call from Subscriber #1 to the third party TD 120A, the SLS platform 115 may cause the calling number to be reflected as the SLS number 1.770.555.0001 instead of the actual primary number of subscriber TD 110." *Id.*

2. Overview of Taylor

Taylor describes "a networked computer telephony system including the Internet and the Public Switched Telephone System." Ex. 1007 ¶ 2. Taylor's Figure 1A is reproduced below.

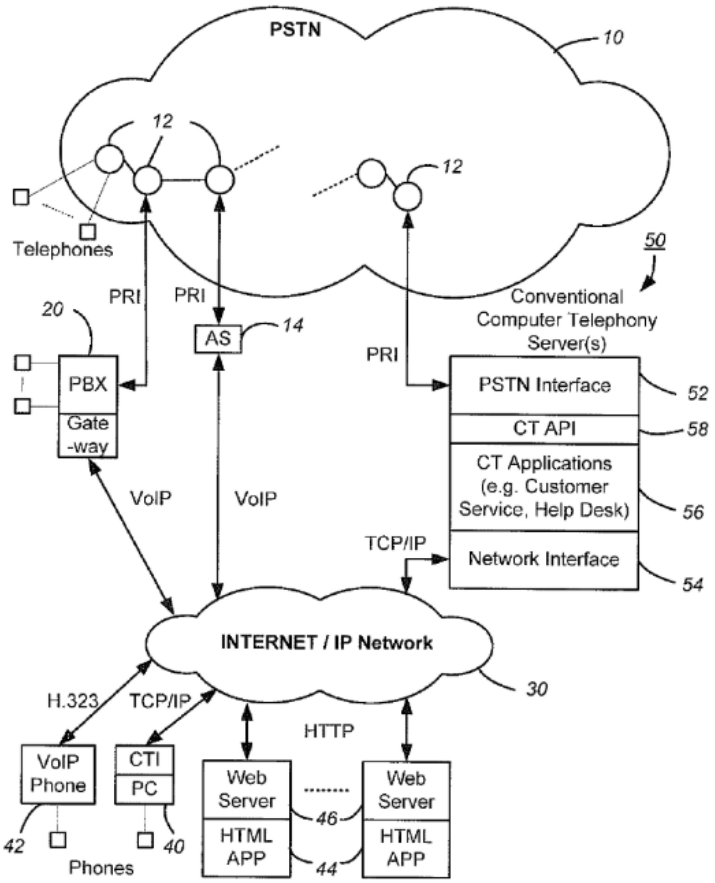

FIG. 1A *(Prior Art)*

Id. at Fig. 1A. Figure 1A depicts "a typical configuration of a conventional computer telephony server operating with a Public Switched Telephone Network (PSTN) and/or the Internet." *Id.* ¶ 4. Taylor states that "[t]he CT 50 can be configured to interface via a PSTN interface 52 with an exchange 12 to receive and process calls pertaining to a predefined set of telephone numbers on the PSTN." *Id.* ¶ 8.

3. Claim 1

Claim 1 recites "[a] method of providing telephone service." Ex. 1001, 10:14. Backhaus teaches a method for routing calls between a subscriber TD and a third party TD. Pet. 8–14; Ex. 1005 ¶¶ 9, 30, code (57).

Patent Owner does not dispute that the Backhaus and Taylor combination teaches the preamble of claim 1.[2]

Claim 1 recites "automatically storing electronic information that indicates an association of a secondary telephone number and a primary telephone number with a mobile device in a computer memory associated with a server." Ex. 1001, 10:15–18. Backhaus teaches automatically storing an association of a primary number and an SLS number (i.e., a secondary number) for the subscriber TD in a SLS Master ID Table in a SLS platform. Pet. 15–19; Ex. 1005 ¶¶ 31, 33–34, 39–40, 42–44, 60, 75, Fig. 3A. Backhaus also teaches that the subscriber TD is a mobile device. Pet. 15; Ex. 1005 ¶¶ 31, 33, 50, 81–83. Patent Owner does not dispute that the Backhaus and Taylor combination teaches this limitation of claim 1.

Claim 1 recites "automatically transmitting information that indicates an access telephone number to the mobile device via a data channel." Ex. 1001, 10:19–21. Backhaus teaches transmitting a relationship number (i.e., an access number) from the SLS platform to the subscriber TD. Pet. 25–26; Ex. 1005 ¶¶ 71–74, Fig. 4D. Backhaus also teaches that the SLS platform transmits the relationship number to the subscriber TD via a data channel, such as an IP channel. Pet. 25–26; Ex. 1005 ¶¶ 71–74.

Patent Owner argues that Petitioner does not show sufficiently that Backhaus teaches transmitting a relationship number to the subscriber TD

[2] Because Petitioner presents evidence that the prior art teaches the recitations in the preamble of claim 1, we need not decide whether the preamble is limiting.

"via a data channel."[3] PO Resp. 21–23; PO Sur-reply 11. Specifically, Patent Owner contends that "[t]he fact that ***some*** information shared between the SLS module and platform may occur via IP and that ***one*** piece of information shared is a relationship number does not mean that the relationship number specifically is transmitted via IP." PO Resp. 22 (citing Ex. 1005 ¶¶ 72–74; Ex. 2010 ¶ 72). According to Patent Owner, a person of ordinary skill in the art "would understand that Backhaus'[s] discussion of using IP could be referring to other information shared between the SLS platform and module." *Id.* (citing Ex. 2010 ¶ 72). Patent Owner further contends that "Backhaus paragraphs 72 and 73 mention alleged data protocols, but never once mention the relationship number," whereas "paragraph 74 describes a new, separate step of transmitting a relationship number . . . and never identifies what protocol is used." PO Sur-reply 11.

Patent Owner's argument is unavailing. Backhaus does not merely teach transmitting some information via a data channel. Backhaus expressly teaches transmitting a relationship number from the SLS platform to the subscriber TD via a data channel. Ex. 1005 ¶¶ 71–74, Figure 4D. Specifically, Backhaus teaches that the subscriber TD "provide[s] the request for the new relationship number, along with the third party number it desires to call, to the SLS platform." *Id.* ¶ 71. Backhaus teaches that the subscriber TD then "obtain[s] *a relationship number*" from the SLS platform "via a session-based protocol such as, but not limited to, an unstructured

[3] Petitioner asserts that Backhaus teaches transmitting a relationship number to the subscriber TD "via a data channel" in two ways. Pet. 22–26. We rely only on the "second way" for purposes of this Decision. *Id.* at 25–26. Thus, we do not address Patent Owner's arguments regarding the "first way." PO Resp. 15–21, 23–28; PO Sur-reply 5–13.

supplementary services data ('USSD') protocol." *Id.* ¶ 72 (emphasis added). Backhaus explains that the USSD protocol is just an example and "an IP-based interaction . . . may be used."[4] *Id.* ¶ 73. Backhaus also explains that using a USSD or IP channel "may minimize temporal delays in allocating and *acquiring relationship numbers* between an SLS module 105 and an SLS platform 115." *Id.* (emphasis added). Thus, Backhaus specifically identifies a data channel for transmitting a relationship number from the SLS platform to the subscriber TD.

Patent Owner also argues that Petitioner's "first way" that Backhaus teaches transmitting a relationship number via a data channel includes "inconsistent positions," which "undermines all of [Petitioner's] arguments and specifically undermines the expert's credibility." PO Resp. 23–28; PO Sur-reply 11–13. We disagree. Petitioner's theory regarding the "second way" that Backhaus teaches transmitting a relationship number via a data channel is credible because it is consistent with and supported by Backhaus's teachings. *See* Pet. 25–26; Ex. 1002 ¶ 70; Ex. 1005 ¶¶ 71–74; Section II.G.

Claim 1 recites "automatically associating a primary telephone number and access telephone number pairing with a corresponding secondary telephone number and contact telephone number pairing in the computer memory." Ex. 1001, 10:22–25. Backhaus teaches pairing a primary number with a relationship number and pairing a SLS number with a third party number (i.e., a contact number). Pet. 27–29; Ex. 1005 ¶¶ 49,

[4] The evidence of record indicates, and Patent Owner does not dispute, that USSD and IP channels are data channels. Ex. 1002 ¶ 70; *see* PO Resp. 21–23; PO Sur-reply 11.

52–53, 60, 70, Fig. 4C. Backhaus also teaches associating the primary and relationship number pairing with the SLS and third party number pairing. Pet. 29–31; Ex. 1005 ¶¶ 10, 13, 15, 46, 52–53, 59, 60. Patent Owner does not dispute that the Backhaus and Taylor combination teaches this limitation of claim 1.

We refer to the next three limitations of claim 1 collectively as "the switch limitations." Claim 1 recites "receiving, at a switch associated with the server, an outgoing call from the mobile device to the access telephone number via a second channel." Ex. 1001, 10:26–28. Backhaus teaches that the subscriber TD calls the relationship number, and a PSTN routes the call to the SLS platform. Pet. 32–34; Ex. 1005 ¶¶ 32, 49, 59. Taylor teaches a PSTN interface (i.e., a switch) associated with a server for receiving calls on a PSTN. Pet. 50–52; Ex. 1007 ¶¶ 4, 8 ("The CT server 50 can be configured to interface via a PSTN interface 52 with an exchange 12 to receive . . . calls . . . on the PSTN."), Fig. 1A. As discussed in more detail below regarding the reason to combine, it would have been obvious to a person of ordinary skill in the art to combine the teachings of Backhaus and Taylor so that Backhaus's SLS platform communicates with the PSTN using Taylor's PSTN interface. Pet. 52–54; Ex. 1002 ¶ 97; *see* Section II.D.6. Patent Owner argues that Petitioner does not show sufficiently that the Backhaus and Taylor combination teaches this limitation of claim 1. PO Resp. 35–38; PO Sur-reply 13–15. We address Patent Owner's arguments below.

Claim 1 recites "receiving, at the server, information from the switch indicating the outgoing call is being made to the access telephone number from the primary telephone number." Ex. 1001, 10:29–32. Backhaus teaches that the SLS platform receives information indicating that the

outgoing call is being made to the relationship number from the primary number. Pet. 38–40; Ex. 1005 ¶¶ 49, 59–60, 69–70. Taylor teaches that its PSTN interface provides information to a server pertaining to a telephone number on a PSTN. Pet. 50–52; Ex. 1007 ¶¶ 4, 8 ("The CT server 50 can be configured to interface via a PSTN interface 52 with an exchange 12 to receive and process calls pertaining to . . . telephone numbers on the PSTN."); Fig. 1A. As discussed in more detail below regarding the reason to combine, it would have been obvious to a person of ordinary skill in the art to combine the teachings of Backhaus and Taylor so that Backhaus's SLS platform communicates with the PSTN using Taylor's PSTN interface. Pet. 52–54; Ex. 1002 ¶ 97; *see* Section II.D.6. Patent Owner argues that Petitioner does not show sufficiently that the Backhaus and Taylor combination teaches this limitation of claim 1. PO Resp. 35–38; PO Sur-reply 13–15. We address Patent Owner's arguments below.

Claim 1 recites "receiving, at the switch, information from the server directing the switch to: (a) connect the outgoing call to the contact telephone number of the secondary telephone number and contact telephone number pairing, and (b) identify a telephone number from which the outgoing call is being made as the secondary telephone number." Ex. 1001, 10:33–40. Backhaus teaches that the SLS platform provides information for connecting the outgoing call to the third party number and identifying the outgoing call as made from the SLS number. Pet. 40–44; Ex. 1005 ¶¶ 60, 70. Taylor teaches that a server communicates information to a PSTN using the PSTN interface. Pet. 50–52; Ex. 1007 ¶ 4 ("External digital communication systems typically communicate with the PSTN by interfacing with an exchange such as 12"), ¶ 8, Fig. 1A. As discussed in more detail below

regarding the reason to combine, it would have been obvious to a person of ordinary skill in the art to combine the teachings of Backhaus and Taylor so that Backhaus's SLS platform communicates with the PSTN using Taylor's PSTN interface. Pet. 52–54; Ex. 1002 ¶ 97; *see* Section II.D.6. Patent Owner argues that Petitioner does not show sufficiently that the Backhaus and Taylor combination teaches this limitation of claim 1. PO Resp. 35–38; PO Sur-reply 13–15. We address Patent Owner's arguments below.

Patent Owner presents several arguments regarding the switch limitations. First, Patent Owner argues that Petitioner does not show sufficiently that Taylor's PSTN interface is a switch. PO Resp. 35–37; PO Sur-reply 14. Specifically, Patent Owner contends that Taylor identifies exchange 12 in Figure 1A as a switch, not PSTN interface 52. PO Resp. 35–36 (citing Ex. 1007 ¶¶ 4, 8, Fig. 1A; Ex. 2010 ¶¶ 98–99); PO Sur-reply 14. Patent Owner also contends that even if Petitioner is correct that Taylor's PSTN interface is similar to the claimed switch, "similarity is not enough." PO Resp. 36–37 (citing Pet. 52); PO Sur-reply 14.

Patent Owner's argument is unavailing. Taylor's labeling of another element in Figure 1A as a switch does not preclude Taylor's PSTN interface from teaching the switch recited in claim 1. *See Adasa Inc. v. Avery Dennison Corp.*, 55 F.4th 900, 910 (Fed. Cir. 2022) (A "reference need not disclose the [claimed] elements in the very same terms used by the patent."); *In re Bond*, 910 F.2d 831, 832 (Fed. Cir. 1990) ("this is not an 'ipsissimis verbis' test"). As discussed above, the evidence of record indicates that Taylor's PSTN interface, when implemented in Backhaus's system, performs the three steps recited in the switch limitations. Ex. 1002 ¶¶ 95–99; Ex. 1007 ¶¶ 4, 8, Fig. 1A. And Patent Owner does not dispute that

Taylor's PSTN interface performs those three steps in the proposed combination. *See* PO Resp. 34–38; PO Sur-reply 13–15.

Further, in this case, Patent Owner does not propose an express construction for the term "switch." *See* PO Resp. 6–13, 34–38; PO Sur-reply 13–15; Tr. 65:16–67:3. But Petitioner points out that, in another proceeding involving related patents, Patent Owner stated that "the claims describe the switch in the same way as the extrinsic evidence and the specification: as an element in the communications networks that facilitates connections between transmitters and receivers." Pet. 52; Ex. 1009, 22. Patent Owner's interpretation is consistent with the written description of the '585 patent and the testimony of Patent Owner's declarant, Dr. Robert Akl, in this case. *See* Pet. 52; Pet. Reply 18; Ex. 1001, 2:19–21. 6:5–7, 6:16–18; Ex. 1102, 89:6–19; Tr. 120:10–121:17. And, as discussed above, Taylor teaches that its PSTN interface facilitates a connection between a server and a PSTN. Pet. 51–52; Pet. Reply 18; Ex. 1007 ¶ 8 ("The CT server 50 can be configured to interface via a PSTN interface 52 with an exchange 12 to receive and process calls pertaining to a predefined set of telephone numbers on the PSTN."). Thus, the evidence of record indicates that Taylor's PSTN interface satisfies Patent Owner's interpretation of the term "switch."

According to Patent Owner, Petitioner's reliance on Patent Owner's interpretation from the other proceeding is improper because it is "untimely" and "plainly overbroad." PO Sur-reply 14; Tr. 64:18–65:3. We disagree. Petitioner relied on Patent Owner's interpretation in the Petition, so it is *not* a new theory presented for the first time in the Reply. Pet. 35 n.7, 52. In addition, Patent Owner cited specific evidence to support its interpretation of the term "switch" in the other proceeding, and Patent Owner does not cite

any evidence in this case indicating that it is overbroad or otherwise improper. *See* PO Sur-reply 14; Ex. 1009, 20–22.

Second, Patent Owner argues that Petitioner does not show sufficiently that Taylor teaches using the same switch for the switch limitations in claim 1. PO Resp. 37–38; PO Sur-reply 14–15. In particular, Patent Owner contends that Petitioner "does not even attempt to show that it would have been obvious to use the same switch for the functionalities listed" in the switch limitations. PO Resp. 37; *see* PO Sur-reply 14–15. Further, according to Patent Owner, "Taylor expressly depicts that a network consists of multiple switches, such as the five shown in Figure 1A." PO Resp. 37.

Patent Owner's argument is unavailing. Taylor teaches one PSTN interface that connects a server with a PSTN. Ex. 1007 ¶ 8 ("a PSTN interface 52"), Fig. 1A. And Petitioner presents evidence that a person of ordinary skill in the art "would have been motivated to include *a PSTN interface* similar to that discussed in Taylor when implementing Backhaus's telephony service system." Pet. 52 (emphasis added); *see also id.* at 53 ("motivated to connect SLS platform 115 with the PSTN and to also include *a PSTN interface*") (emphasis added); Ex. 1002 ¶ 97 ("motivated to include *a PSTN interface*") (emphasis added). Thus, the evidence of record shows that a person of ordinary skill in the art would have implemented a single PSTN interface from Taylor to facilitate a connection between Backhaus's SLS platform and the PSTN. Pet. 52–54; Ex. 1002 ¶¶ 97–99. As discussed above, that one PSTN interface, when implemented in Backhaus's system,

performs the three steps recited in the switch limitations.[5] Ex. 1002 ¶¶ 95–99; Ex. 1007 ¶¶ 4, 8, Fig. 1A.

Third, Patent Owner argues that we should not consider the Backhaus and Taylor combination because it is "irrelevant." PO Sur-reply 14–15; Tr. 60:1–12, 64:14–17. Specifically, Patent Owner contends that the Backhaus and Taylor combination is "relevant only if the switch must be 'separate from the PSTN,'" which "Patent Owner has not argued." PO Sur-reply 14–15; Tr. 60:1–12, 64:14–17. Patent Owner's argument is unavailing. As discussed above, the evidence of record shows that the Backhaus and Taylor combination includes one PSTN interface that performs the three steps recited in the switch limitations. Ex. 1002 ¶¶ 95–99; Ex. 1007 ¶¶ 4, 8, Fig. 1A. Even if Patent Owner is correct that Petitioner relies primarily on the Backhaus and Taylor combination to teach a switch separate from the PSTN, that does not detract from the evidence showing that the combination includes one switch for performing the three steps recited in the switch limitations of claim 1.

For the foregoing reasons, on this record, Petitioner shows sufficiently that the Backhaus and Taylor combination teaches the limitations of claim 1.

4. Claim 2

Claim 2 depends from claim 1, and recites "wherein the data channel is an Internet protocol (IP) channel." Ex. 1001, 10:41–42. Backhaus teaches that the SLS platform transmits the relationship number to the

[5] Even if Patent Owner is correct that the PSTN uses additional switches to complete the outgoing call, the parties agree that claim 1 does not preclude the use of such additional switches. Tr. 12:13–21, 47:1–13 ("Every call is going to go through multiple switches."). Claim 1 only requires that the same switch perform the specific steps recited in the switch limitations. *Id.*

subscriber TD via an "IP-based interaction" (i.e., an IP channel). Pet. 25–26, 44; Ex. 1005 ¶ 73. Other than the arguments discussed above for claim 1, Patent Owner does not dispute that the Backhaus and Taylor combination teaches this limitation of claim 2.

5. Claim 4

Claim 4 depends from claim 1, and recites "wherein the second channel is not an Internet Protocol (IP) channel." Ex. 1001, 10:45–46. Backhaus teaches that the subscriber TD calls the relationship number, and a PSTN routes the call to the SLS platform using signaling system seven ("SS7") protocol, which is not an IP channel. Pet. 32–34, 45; Ex. 1005 ¶¶ 32, 49, 59. Other than the arguments discussed above for claim 1, Patent Owner does not dispute that the Backhaus and Taylor combination teaches this limitation of claim 4.

6. Reason to Combine

Petitioner asserts that a person of ordinary skill in the art would have had reason to combine the cited teachings of Backhaus and Taylor. Pet. 50–54 (citing Ex. 1002 ¶¶ 94–100). We agree with Petitioner's rationale. Specifically, it would have been obvious to a person of ordinary skill in the art to combine the teachings of Backhaus and Taylor so that Backhaus's SLS platform communicates with the PSTN using Taylor's PSTN interface. *Id.* at 53; Ex. 1002 ¶ 97. Doing so would have been obvious because Backhaus teaches using its SLS platform with a PSTN, and Taylor provides an interface that allows an external system, such as Backhaus's SLS platform, to communicate with a PSTN. Pet. 52–53; Ex. 1002 ¶ 97; Ex. 1005 ¶ 32; Ex. 1007 ¶¶ 4, 8. In addition, a person of ordinary skill in the art would

have had a reasonable expectation of success in using Taylor's PSTN interface with Backhaus's SLS platform. Pet. 53–54; Ex. 1002 ¶ 98.

Patent Owner argues that Petitioner does not show sufficiently that it would have been obvious to combine the cited teachings of Backhaus and Taylor. PO Resp. 38; PO Sur-reply 15. Specifically, Patent Owner contends that a person of ordinary skill in the art "would understand that Backhaus already has its own mechanism for interfacing with the PSTN," and Petitioner "offers no reason for replacing Backhaus' PSTN interface with that of Taylor" or "add[ing] a second, redundant PSTN interface." PO Resp. 38 (citing Ex. 2010 ¶ 101); PO Sur-reply 15.

Patent Owner's argument is unavailing. Petitioner relies on Taylor to provide a known element that is not taught expressly by Backhaus. Pet. 52–54. Specifically, a person of ordinary skill in the art would have recognized that Backhaus's system needs an interface to facilitate a connection between the SLS platform and the PSTN. *Id.* at 53; Ex. 1002 ¶ 97; Ex. 1007 ¶¶ 4, 8; *see KSR*, 550 U.S. at 420 ("[A]ny need or problem known in the field of endeavor at the time of the invention and addressed by the patent can provide a reason for combining the elements in the manner claimed."). But Backhaus does not mention such an interface. Thus, a person of ordinary skill in the art would have had reason to implement Backhaus's system using Taylor's PSTN interface to perform its established function of facilitating a connection between an external device (i.e., the SLS platform) and a PSTN. Ex. 1002 ¶ 98; Ex. 1007 ¶¶ 4, 8; *see KSR*, 550 U.S. at 416 ("The combination of familiar elements according to known methods is likely to be obvious when it does no more than yield predictable results.").

According to Patent Owner, Petitioner's assertion that a person of ordinary skill in the art would have recognized that Backhaus's system needs a PSTN interface is an "improper new argument." Tr. 60:13–24. We disagree. Petitioner asserts in the Petition that a person of ordinary skill in the art "would have been motivated to connect SLS platform 115 with the PSTN and to also include a PSTN interface *in order to facilitate such [a] connection* when implementing Backhaus's system and processes—*such that* SLS platform 115 *could provide* the disclosed second line services to many device users connected to the PSTN." Pet. 53; Ex. 1002 ¶ 97 (emphases added). In other words, Petitioner's theory in the Petition is that a person of ordinary skill in the art would have had reason to include a PSTN interface in Backhaus so that the SLS platform is capable of providing the services described in Backhaus. Pet. 53; Ex. 1002 ¶ 97. This theory is consistent with Petitioner's argument in the Reply and at the oral hearing. Pet. Reply 19; Tr. 113:20–114:3.

7. Summary

For the foregoing reasons, Petitioner has shown by a preponderance of the evidence that claims 1, 2, and 4 would have been obvious over Backhaus and Taylor.

E. Obviousness of Claim 3 over Backhaus, Saksena, and Taylor

Petitioner argues that claim 3 would have been obvious over Backhaus, Saksena, and Taylor. Pet. 45–54. For the reasons discussed below, Petitioner has shown by a preponderance of the evidence that claim 3 would have been obvious over Backhaus, Saksena, and Taylor.

1. Claim 3

Claim 3 depends from claim 2, and recites "wherein the second channel is established in accordance with a CDMA or GSM standard." Ex. 1001, 10:43–44. Backhaus teaches that the subscriber TD calls the relationship number, and a PSTN routes the call to the SLS platform. Pet. 32–34, 45–46; Ex. 1005 ¶¶ 32, 49, 59. Saksena teaches that a mobile device on a cellular network operates using a CDMA or GSM standard and places a call routed through a PSTN. Pet. 46–48; Ex. 1008 ¶¶ 53, 82, 119–120, Fig. 1A. As discussed in more detail below regarding the reason to combine, it would have been obvious to a person of ordinary skill in the art to combine the teachings of Backhaus, Saksena, and Taylor so that Backhaus's subscriber TD operates using the CDMA or GSM standard when calling the relationship number. Pet. 48–50; Ex. 1002 ¶¶ 92–93; *see* Section II.E.2. Other than the arguments discussed above for claim 1, Patent Owner does not dispute that the Backhaus, Saksena, and Taylor combination teaches this limitation of claim 3.

2. Reason to Combine

Petitioner asserts that a person of ordinary skill in the art would have had reason to combine the cited teachings of Saksena with Backhaus and Taylor. Pet. 48–50 (citing Ex. 1002 ¶¶ 92–93). We agree with Petitioner's rationale. Specifically, it would have been obvious to combine the teachings of Backhaus and Saksena so that Backhaus's subscriber TD operates using the CDMA or GSM standard when calling the relationship number. Pet. 48–49; Ex. 1002 ¶ 92. Doing so would have been obvious because it involves combining a known element (i.e., the known CDMA or GSM standard for mobile device networks) according to a known method (i.e., implementing a

voice channel based on the CDMA or GSM standard) to yield the predictable result of a telecommunication system with a voice channel implemented using the CDMA or GSM standard. Pet. 49–50; Ex. 1002 ¶ 93. Other than the arguments discussed above, Patent Owner does not dispute that it would have been obvious to combine the cited teachings of Backhaus, Saksena, and Taylor.

3. Summary

For the foregoing reasons, Petitioner has shown by a preponderance of the evidence that claim 3 would have been obvious over Backhaus, Saksena, and Taylor.

F. Other Asserted Grounds

Petitioner also argues that 1) claims 1, 2, and 4 are anticipated by Backhaus; and 2) claim 3 would have been obvious over Backhaus and Saksena. Pet. 8–50. Because Petitioner has shown that claims 1–4 are unpatentable based on the asserted grounds discussed above, we do not reach these additional asserted grounds. *See Beloit Corp. v. Valmet Oy*, 742 F.2d 1421, 1423 (Fed. Cir. 1984) ("The Commission . . . is at perfect liberty to reach a 'no violation' determination on a single dispositive issue."); *Boston Sci. Scimed, Inc. v. Cook Grp. Inc.*, 809 F. App'x 984, 990 (Fed. Cir. 2020) (recognizing that "[t]he Board has the discretion to decline to decide additional instituted grounds once the petitioner has prevailed on all its challenged claims").

G. Lin Declaration

Patent Owner argues that we should "disregard" the Lin Declaration because it is "highly conclusory" and "internally contradictory," and because Dr. Lin "could not explain his opinions at deposition." PO Resp. 38–39; PO

Sur-reply 15–17. In particular, Patent Owner contends that the Lin Declaration "does not contain any statement of the legal standards the expert understood or was applying, such as standards relating to defining the person of ordinary skill in the art, anticipation, or obviousness," and Dr. Lin "could not recall whether Petitioner gave him instructions on any legal principle." PO Resp. 39–40 (citing Ex. 2009, 9:1–11, 14:5–17:6, 23:6–11, 25:3–10, 26:9–22, 33:11–34:1, 34:3–11); PO Sur-reply 16. Patent Owner's argument is unavailing. We do not rely on the Lin Declaration as evidence of any legal standard or for Dr. Lin's legal conclusions. Rather, we rely on the Lin Declaration to support our factual determinations regarding the teachings of Backhaus, Saksena, and Taylor, as well as why and how a person of ordinary skill in the art would have combined those teachings. *See* Sections II.D.3, II.D.6, II.E.1, II.E.2. Thus, irrespective of whether the Lin Declaration discusses a particular legal standard, we do not disregard the entire Lin Declaration.

Patent Owner also contends that the Lin Declaration "fails to explain critical points and contains contradictory positions" regarding Petitioner's "first way" that Backhaus teaches transmitting a relationship number to the subscriber TD via a data channel, as well as the meaning of the claim term "channel." PO Resp. 40–47 (citing Ex. 2009, 54:3–16, 60:6–19, 63:10–21, 67:3–74:12, 75:4–77:9, 81:14–93:22, 97:18–107:1); PO Sur-reply 16–17. Patent Owner's argument is unavailing. As discussed above, we rely only on Petitioner's "second way" that Backhaus teaches transmitting a relationship number to the subscriber TD via a data channel. *See* Section II.D.3. Dr. Lin's testimony regarding the "second way" is credible because it is consistent with and supported by Backhaus's teachings. *See id.*;

Ex. 1002 ¶ 70; Ex. 1005 ¶¶ 71–74. Thus, irrespective of whether the Lin Declaration sufficiently supports Petitioner's "first way," we do not disregard the entire Lin Declaration.

III. CONCLUSION[6]

Petitioner has shown by a preponderance of the evidence that claims 1–4 of the '585 patent are unpatentable.

In summary:

Claims	35 U.S.C. §	Reference(s)/Basis	Claims Shown Unpatentable	Claims Not Shown Unpatentable
1, 2, 4	102	Backhaus[7]		
3	103	Backhaus, Saksena[8]		
1, 2, 4	103	Backhaus, Taylor	1, 2, 4	
3	103	Backhaus, Saksena, Taylor	3	
Overall Outcome			1–4	

[6] Should Patent Owner wish to pursue amendment of the challenged claims in a reissue or reexamination proceeding subsequent to the issuance of this decision, we draw Patent Owner's attention to the April 2019 *Notice Regarding Options for Amendments by Patent Owner Through Reissue or Reexamination During a Pending AIA Trial Proceeding*. *See* 84 Fed. Reg. 16,654 (Apr. 22, 2019). If Patent Owner chooses to file a reissue application or a request for reexamination of the challenged patent, we remind Patent Owner of its continuing obligation to notify the Board of any such related matters in updated mandatory notices. *See* 37 C.F.R. § 42.8(a)(3), (b)(2).

[7] We do not reach this asserted ground. *See* Section II.F.

[8] We do not reach this asserted ground. *See* Section II.F.

IV. ORDER

It is hereby

ORDERED that claims 1–4 of the ’585 patent are shown unpatentable; and

FURTHER ORDERED that, because this is a Final Written Decision, parties to the proceeding seeking judicial review of the decision must comply with the notice and service requirements of 37 C.F.R. § 90.2.

For PETITIONER:

Naveen Modi
Joseph E. Palys
Daniel Zeilberger
Howard Herr
Puja Patel
PAUL HASTINGS LLP
naveenmodi@paulhastings.com
josephpalys@paulhastings.com
danielzeilberger@paulhastings.com
howardherr@paulhastings.com
pujapatel@paulhastings.com

For PATENT OWNER:

Louis L. Campbell
Juan C. Yaquian
Michael A. Bittner
William M. Logan
Matthew R. McCullough
WINSTON & STRAWN LLP
llcampbell@wintson.com
jyaquian@winston.com
mbittner@winston.com
wlogan@winston.com
mrmccullough@winston.com