UNITED STATES PATENT AND TRADEMARK OFFICE

BEFORE THE PATENT TRIAL AND APPEAL BOARD

GOOGLE LLC,
Petitioner,

v.

FLYPSI, INC.,
Patent Owner.

Case IPR2023-00358
Patent 10,334,094 B1

DECLARATION OF DR. ROBERT AKL IN SUPPORT OF PATENT OWNER'S RESPONSE

TABLE OF CONTENTS

I. INTRODUCTION 4

II. BACKGROUND AND QUALIFICATIONS 4

III. MATERIALS RELIED UPON IN FORMING MY OPINIONS 11

IV. LEGAL STANDARDS FOR PATENTABILITY 11

A. Claim Construction.....11

B. Anticipation 12

C. Obviousness.....12

V. LEVEL OF ORDINARY SKILL IN THE ART 14

VI. OVERVIEW OF THE ’094 PATENT.....15

VII. CLAIM CONSTRUCTION.....18

A. “channel” terms 18

VIII. OVERVIEW OF THE CITED PRIOR ART.....24

A. Backhaus (Ex. 1005) 24

B. Taylor (Ex. 1007) 25

C. Saksena (Ex. 1008).....26

IX. GROUND 1.....27

A. Backhaus does not anticipate limitation [1.c]’s requirement to transmit the information “via a data channel.”.....27

1. The Petition’s “first way” fails to disclose transmitting “via a data channel.” 27

2. The Petition’s “second way” fails to disclose transmitting “via a data channel.” 31

B. The Petition takes inconsistent positions on what qualifies as a "data channel." 32

C. Backhaus does not anticipate limitation [1.e], [1.f], and [1.g]'s requirement to use the same "switch" for each claim step. 36

D. Backhaus does not anticipate claims 2 or 4. 40

X. GROUND 2.....41

A. Backhaus in view of Saksena does not render obvious claim 3. 41

XI. GROUND 3.....41

A. Backhaus in view of Taylor does not render obvious claim 1. 41

XII. GROUND 4.....43

A. Backhaus in view of Saksena and Taylor does not render obvious claim 3. 43

XIII. ADDITIONAL REMARKS 43

I, Robert Akl, D.Sc. of Dallas, Texas, hereby state and declare:

I. INTRODUCTION

1. I am over the age of 18 and am competent to make this Declaration. I have personal knowledge, or have developed knowledge, of these technologies based upon my education, training, and/or experience, of the matters set forth herein. If called upon to do so, I would testify competently thereto.

2. I have been retained by counsel for Patent Owner Flypsi, LLC ("Flypsi") in the above matter. I am submitting this Declaration in response to the Petition for *Inter Partes* Review for U.S. Patent 10,334,094 ("'094 Patent") and in rebuttal to the declaration of Dr. Lin. Specifically, I have been asked to consider the validity of claims 1-4 of the '094 Patent (the "Challenged Claims") in view of prior art, obviousness considerations, and understanding of a person of ordinary skill in the art ("POSITA") at the time of the invention as it relates to the '094 Patent.

II. BACKGROUND AND QUALIFICATIONS

3. I am an expert in the field of telecommunication systems. I have studied, taught, practiced, and researched this field for over 28 years. I have summarized in this section my educational background, work experience, and other relevant qualifications. Exhibit 2011 is a true and correct copy of my *curriculum vitae* describing my background and experience.

4. I earned two Bachelor of Science degrees in Electrical Engineering and

Computer Science *summa cum laude* with a grade point average of 4.0/4.0 and a ranking of first in my undergraduate class from Washington University in St. Louis in 1994. In 1996, I earned my Master of Science degree in Electrical Engineering from Washington University in St. Louis with a grade point average of 4.0/4.0. I earned my Doctor of Science in Electrical Engineering from Washington University in St. Louis in 2000, again with a grade point average of 4.0/4.0, with my dissertation being on "Cell Design to Maximize Capacity in Cellular Code Division Multiple Access (CDMA) Networks."

5. While a graduate student, from 1997 through 1999, I worked at MinMax Corporation in St. Louis, where I designed software packages that provided tools to flexibly allocate capacity in a CDMA communications network and maximize the number of subscribers. I also validated the hardware architecture for an Asynchronous Transfer Mode (ATM) switch capable of channel group switching, as well as performed logical and timing simulations, and developed the hardware architecture for the ATM switch. I also worked with Teleware Corporation in Seoul, South Korea, where I designed and developed algorithms that were commercially deployed in a software package suite for analyzing the capacity in a CDMA network implementing the IS-95 standard to maximize the number of subscribers.

6. After obtaining my Doctor of Science degree, I worked as a Senior Systems Engineer at Comspace Corporation from October of 2000 to December of

2001. At Comspace, I designed and developed advanced data coding and modulation methods for improving reliability and increasing the available data rates for cellular communications. I coded and simulated different encoding schemes (including Turbo coding, Viterbi decoding, trellis coded modulation, and Reed-Muller codes) and modulation techniques using amplitude and phase characteristics and multi-level star constellations. This work further entailed the optimization of soft decision parameters and interleavers for additive white Gaussian and Rayleigh faded channels. In addition, I also extended the control and trunking of Logic Trunked Radio (LTR) to include one-to-one and one-to-many voice and data messaging.

7. In January of 2002, I joined the faculty of the University of New Orleans in Louisiana as an Assistant Professor in the Department of Electrical Engineering. While in this position, I designed and taught two new courses called "Computer Systems Design I and II." I also developed a Computer Engineering Curriculum with a strong hardware-design emphasis, formed a wireless research group, and advised graduate and undergraduate students.

8. In September of 2002, I received an appointment as an Assistant Professor in the Department of Computer Science and Engineering at the University of North Texas (UNT), in Denton, Texas. In May of 2008, I earned tenure and was promoted to the rank of Associate Professor. As a faculty member, I have taught courses and directed research in networking and telecommunications, including 2G,

3G, 4G, 5G, CDMA/WCDMA, GPS, GSM, UMTS, LTE, ad-hoc networks, antenna design and beamforming, Bluetooth, call admission control, channel coding, channel estimation, communication interfaces and standards, compression, computer architecture, MIMO systems, multi-cell network optimization, network security, packet-networks, telephony, VoIP, Wi-Fi (802.11), 802.15.4, Zigbee, wireless communication, and wireless sensors. Between January of 2015 and August of 2022, I was appointed Associate Chair of Graduate Studies in the Department of Computer Science and Engineering. In May of 2023, I was promoted to the rank of Professor.

9. I am also the director of the Wireless Sensor Lab ("WiSL") at UNT. I am a member of the Center for Information and Cyber Security (CICS). It is the only program in the U.S. to be federally certified by the National Security Agency as a Center of Academic Excellence in Information Assurance Education and Research *and* Cyber Defense Research. I was also a member of the NSF Net-Centric & Cloud Software & Systems: Industry-University Cooperative Research Center (I/UCRC). Several of my research projects are funded by industry and the National Science Foundation and published in *IEEE* conference proceedings and journals.

10. In addition to advising and mentoring students at UNT, I was asked to join the faculty of the University of Arkansas in Little Rock as an Adjunct Assistant Professor from 2004 to 2008 in order to supervise the research of two Ph.D. graduate students who were doing research in wireless communications. At UNT, I have

advised and supervised more than 250 undergraduate and graduate students, several of whom received a master's or doctorate degree under my guidance.

11. Between 2005 and 2017, I have received over a million dollars in funding from the State of Texas, Texas Higher Education Coordination Board, the National Science Foundation, and industry to design and conduct robotics, video, and mobile gaming (*e.g.*, Xbox, PC, mobile device) programming summer camps for middle and high school students at UNT. By using video and mobile gaming as the backdrop, participants have learned coding and programming principles and developed an understanding of the role of physics and mathematics in video game design.

12. Between 2011 and 2013, I was director of the Bio-Com Project that was funded by Raytheon. The project evaluated the feasibility study using Surface Electromyography (EMG) and bend resistive sensors, which are attached to each of the five fingers of the hand, for hand gesture recognition. This approach is sometimes known as a "data glove." A prototype was developed and demonstrated at Raytheon, to help soldiers in close-combat situations communicate with hand gestures and hand signals that would be recognized and transmitted to other soldiers' Head Up Display (HUD) without breaking radio silence.

13. In addition to my academic work, I have remained active in the communication industry through my consulting work. In 2002, I consulted for

Input/Output Inc. and designed and implemented algorithms for optimizing the frequency selection process used by sonar for scanning the bottom of the ocean. In 2004, I worked with Allegiant Integrated Solutions in Ft. Worth, Texas to design and develop an integrated set of tools for fast deployment of wireless networks, using the 802.11 standard. Among other features, these tools optimize the placement of Access Points and determine their respective channel allocations to minimize interference and maximize capacity. I also assisted the Collin County Sheriff's Office (Texas) in a double homicide investigation, analyzing cellular record data to determine user location.

14. I have authored and co-authored over 100 journal publications, conference proceedings, technical papers, book chapters, and technical presentations in a broad array of communications-related technologies, including networking and wireless communication. I have also developed and taught over 100 courses related to communications and computer systems, including several courses on signals and systems, 4G/LTE and 5G/NR, OFDM, VoIP, Wi-Fi (802.11), 802.15.4, Zigbee, wireless communication, antenna design and beamforming, communications systems, communication interfaces and standards, channel estimation, location management, sensor networks, source coding and compression, network security, computer systems design, game and app design, and computer architecture. These courses have included introductory courses on communication networks and signals

and systems, as well as more advanced courses on wireless communications. A complete list of my publications and the courses I have developed and/or taught is also contained in my *curriculum vitae*.

15. My professional affiliations include services in various professional organizations and serving as a reviewer for a number of technical publications, journals, and conferences. I have also received a number of awards and recognitions, including the IEEE Professionalism Award (2008), UNT College of Engineering Outstanding Teacher Award (2008), and Tech Titan of the Future (2010) among others, which are listed in my *curriculum vitae*.

16. I have also served as an expert in certain legal proceedings. A list of cases in which I have testified at trial, hearing, or by deposition (including those during the past four years) is provided in my *curriculum vitae*. Over the years, I have been retained by both patent owners and petitioners, as well as plaintiffs and defendants.

17. I am being compensated for my work in this case at my standard rate. I am also being reimbursed for expenses that I incur during the course of this work. My compensation is not contingent upon the results of my study, the substance of my opinions, or the outcome of any proceeding involving the challenged claims. I have no financial interest in the outcome of this matter.

III. MATERIALS RELIED UPON IN FORMING MY OPINIONS

18. In preparing this Declaration, I have reviewed the ’094 Patent and its prosecution history, and the Petition for IPR for the ’094 Patent, including accompanying exhibits and the declaration of Dr. Bill Lin in support of the Petition. I have also reviewed the other documents and materials cited herein. When quoting from these materials, all emphasis is added unless otherwise noted.

19. My opinions are also based upon my education, training, research, knowledge, and personal and professional experience.

IV. LEGAL STANDARDS FOR PATENTABILITY

20. I am not an attorney and I offer no opinion on the law itself. My understanding of the relevant legal principles in this section is based on information provided to me by counsel.

A. Claim Construction

21. I understand that claim terms are typically given their ordinary and customary meaning, as would have been understood by a person of ordinary skill in the art, at the time of the alleged invention, which I was asked to assume is the October 2013 timeframe. In considering the meaning of the claims, I also understand that one must consider the claim language, specification, prosecution history, and the knowledge of a person of ordinary skill in the art (“POSITA”) at the relevant time. I have followed these principles in my analysis.

22. I have been asked to apply the plain and ordinary meaning of the claim terms consistent with the specification.

B. Anticipation

23. I have been informed that a patent claim is invalid as "anticipated" if each and every limitation of the claim is described in a single publication or patent that predates the claimed invention. I understand that, in patent law, these prior publications or patents are called "prior art." I understand that in order to anticipate a claim, a prior art reference must do more than merely disclose each element of the claim, but rather the prior art reference must disclose all of the elements of the claimed invention arranged as is recited by the claim. I also understand that for a prior art reference to anticipate a claim of a patent, the reference must enable one of ordinary skill in the art at the time of the invention to practice the claim without undue experimentation.

24. I have been informed that a claim can be inherently anticipated if the prior art necessarily functions in accordance with or includes the claim limitations. I understand that inherency cannot be established by mere probabilities or possibilities.

C. Obviousness

25. I have been informed by counsel that a claim may be invalid if the invention recited in the claim would have been obvious to one of ordinary skill in

the art at the time the invention was made in light of the prior art. I understand for a claim to be found obvious, every claim limitation must be found present in the combination of the prior art references before the obviousness analysis proceeds.

26. In considering whether a claim is obvious, I understand that one must consider (a) the level of skill in the art at the time of the claimed invention, (b) the scope and content of the prior art, (c) any differences between the prior art and the claims of the patent-in-suit, and (d) any "secondary factors" tending to show non-obviousness of the claimed invention, including commercial success, long-felt but unresolved need, failure of others, copying, praise by others, unexpected results, and simultaneous invention by others.

27. I understand that a claim composed of several elements is not proved obvious merely by demonstrating that each of its elements was independently known in the prior art. I also understand that obviousness should not be analyzed using the benefit of hindsight. Instead, it must be analyzed from the standpoint of what was known and understood by a POSITA at the time of the claimed invention. I further understand demonstrating whether making a modification to a reference or whether combining multiple references would have been obvious requires providing a reason for why a POSITA would modify the reference or combine multiple references, and that reason must be supported with some rationale underpinning. Merely pointing out that two references are similar or in the same field of endeavor is not sufficient.

28. I understand that if a combination of two or more prior art references is used to render a claimed invention obvious, there must be a reasonable expectation of success in making or practicing the claimed invention based on such combination. I understand the combination cannot modify a prior art reference such that it would render the reference unsatisfactory for its intended purpose.

29. I understand that it is impermissible to use the patent as a template (and reason) for combining prior art references as that would be applying hindsight. I understand that a POSITA would have to be motivated to combine references to create the combination of features required by the claims of the patent.

V. LEVEL OF ORDINARY SKILL IN THE ART

30. In rendering the opinions set forth in this Declaration, I was asked to consider the patent claims and the prior art through the eyes of a person of ordinary skill in the art ("POSITA"). The "art" is the field of technology to which a patent is related. In my Declaration, I use the term POSITA and skilled person to refer to the same hypothetical person of ordinary skill in the art. I considered factors such as the educational level and years of experience of those working in the pertinent art; the types of problems encountered in the art; the teachings of the prior art; patents and publications of other persons or companies; and the sophistication of the technology. I understand that a POSITA is not a specific real individual, but rather a hypothetical individual having the qualities reflected by the factors discussed above.

31. Relative to the ’094 Patent, a POSITA would have had a bachelor’s degree in electrical engineering, computer engineering, computer science, or a related field, and two years of experience in the design or development of telecommunication systems. Additional graduate education could substitute for professional experience, or significant experience in the field could substitute for formal education.

32. I understand that Petitioner has proposed the following set of qualifications: “an undergraduate degree in electrical engineering, computer engineering, computer science or a related field along with two years of work experience in the field of telecommunication. More education can supplement practical experience and vice versa.” Petition at 4. I am qualified to provide opinions concerning what a POSITA would have known and understood, and my analysis and conclusions herein are from the perspective of a POSITA and would apply under either set of qualifications.

VI. OVERVIEW OF THE ’094 PATENT

33. I have reviewed the ’094 Patent. It is my opinion that the ’094 Patent is patentable, valid, and not anticipated or rendered obvious in view of the prior art references presented by Petitioner.

34. The ’094 Patent relates to “delivering telephone calls using the combination of a data channel and a voice channel.” Ex. 1001 at Abstract. The ’094

Patent states that it "permit[s] the same handset to be associated with multiple secondary telephone numbers from which calls appear to have been made and to which calls appear to have been placed." *Id.*

35. The specification describes both incoming calls (from a third-party) and outgoing calls (to a third-party). The claims of the '094 Patent, however, relate solely to outgoing calls, and I have therefore focused my analysis in this Declaration on that aspect of the '094 Patent specification.

36. The '094 Patent teaches that a handset may be associated with a primary number (such as the number assigned by a carrier at activation) and one or more secondary numbers:

> In connection with step 204, the server 100 may transmit information to the handset 340 via the data channel, which, through automatic operation of the handset application, permits the user to select one or more secondary telephone numbers to be referenced to a primary telephone number for the handset. The primary telephone number, preferably, may be a SIM number or ESN which is assigned to the handset 340 at the time of activation.

Ex. 1001 at 5:6-13.

37. The '094 Patent further teaches that the user may have a plurality of contacts, which are each associated with a "bridge telephone number." Information related to that association is transmitted to the handset via a "data channel":

> Applicant has further developed an innovative method of providing telephone service, comprising: … automatically associating a unique bridge telephone number with each of a plurality of contact telephone numbers in the computer memory; automatically transmitting

> information that indicates the association of the unique bridge telephone number with each of a plurality of contact telephone numbers to the handset via the data channel

Ex. 1001 at 2:23-34.

38. The ’094 Patent teaches that a bridge telephone number “may be associated with the switch 110, and calls to the bridge telephone number may be automatically routed to this switch.” Ex. 1001 at 7:64-66.

39. The ’094 Patent describes the process for making an outgoing call and depicts that process in Figure 5, which I have excerpted below. In step 512 (highlighted in yellow), “the handset application may cause the handset 340 to automatically call the bridge telephone number via a voice channel.” Ex. 1001 at 8:14-17. This call may be routed over the PSTN. *Id.* at 8:17-20. In step 514 (highlighted in blue), “the Call Manager 140 may look up the secondary telephone number and the contact telephone number associated with the paired bridge telephone number and primary telephone number for the handset 340.” *Id.* at 8:55-58. Then, the “switch 110 may dial the contact telephone number and bridge the call from the handset 340 in a manner that makes the secondary telephone number appear to be the telephone number from which the call is being placed.” *Id.* at 8:58-62.

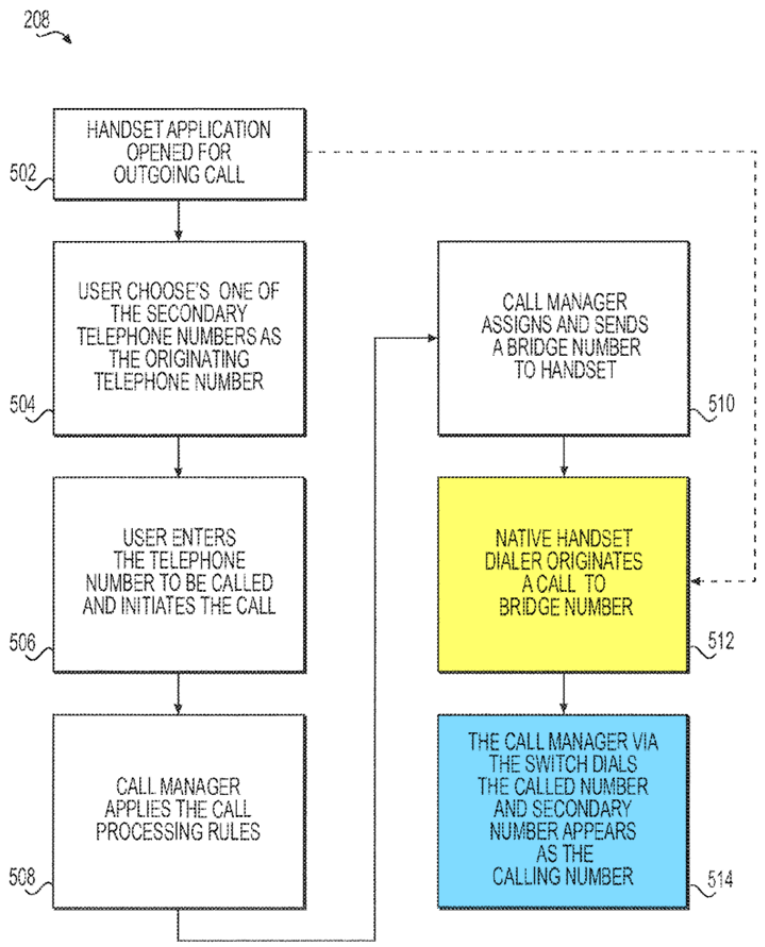

FIG. 5

VII. CLAIM CONSTRUCTION

A. "channel" terms

40. A POSITA would understand that a "channel" does not have to be fully connected on both ends to qualify as a channel. Additionally, a POSITA would understand that a channel does not have to be actually transmitting something to qualify as a channel at that moment.

41. The specification of the '094 Patent describes the use of data and voice

channels in its invention through numerous examples. Specifically, it repeatedly teaches that IP is an example data channel, and that channels such as CDMA, GSM, LTE, 3G, and/or 4G are example voice channels:

> The present invention relates to systems and methods for setting up and connecting telephone calls, and delivering information related to such telephone calls using an Internet Protocol (IP) or other data channel while delivering the voice portion of the call in accordance with CDMA, GSM or like voice channel delivery standards.

Ex. 1001 at 1:24-29.

> Responsive to the foregoing challenges, Applicant has developed an innovative method of providing telephone service by transmitting call handling information between a handset and a switch using an IP channel or similar protocol channel and by transmitting a voice call associated with the call handling information between the handset and the switch using a voice channel provided in accordance with a voice channel protocol, e.g., in accordance with CDMA or GSM, 3G, 4G, LTE or like future protocol channels standards.

Id. at 1:50-59.

> It should be noted that in connection with the described embodiments, reference is made to a data channel. A preferred data channel may be an Internet Protocol (IP) channel, which is not a conventional telephone voice channel.

Id. at 4:14-18.

> The communications between the server 100 and the handset 340 over the Internet 316 may utilize IP as a protocol opposed to protocols used to establish communications according to CDMA, GSM, or like standards. Such IP governed communications are referred to herein as being conducted over a "data channel." Conversely, communications between the switch 110 and the handset over the PSTN 310 may be transmitted and received in accordance with CDMA, GSM or like standards as opposed to using IP. Such CDMA, GSM or like governed

> communications, when used to carry voice information, are referred to herein as being conducted over a "voice channel."

Id. at 4:44-55.

42. The exemplary voice channels (CDMA, GSM, LTE, 3G, and/or 4G) are all conventional voice channels that a POSITA would be familiar with because they are used in conventional telephony.

43. The specification includes the following statement: "Such CDMA, GSM or like governed communications, when used to carry voice information, are referred to herein as being conducted over a 'voice channel.'" Ex. 1001 at 4:52-55. A POSITA would not understand the language "when used to carry voice information" to mean that a voice channel only qualifies as a channel when actually transmitting voice but not at other times (*e.g.*, when the phone is ringing, before the audio is connected). There is no teaching anywhere in the specification that would support such a temporal limitation, and it is not consistent with how POSITAs describe channels and protocols.

44. In fact, later teachings in the specification expressly contradict that that the "when" language imposes any such temporal requirement. Specifically, the patent describes that in an incoming call, there are two pending calls at the switch on a "voice channel" ***before*** they are bridged together to connect both ends. The specification consistently and repeatedly describes the calls as using a "voice channel" before they are connected (highlighted in blue below) and, afterwards, they

are connected (highlighted in red below)

> If the call is accepted in step 414, however, the handset application may automatically cause the handset 340 to call the bridge telephone number in step 422 ***over a voice channel***. The return call from the handset 340 to the bridge telephone number may be routed over the PSTN 310 to the switch 110 ***using a voice channel*** connection. In step 424, once the call to the bridge telephone number is received at the switch 110, the switch may "bridge" the ***incoming voice channel call*** to the bridge telephone number with the ***incoming voice channel call*** to the secondary telephone number to thereby ***connect the incoming call from the calling party to the handset 340 via a voice channel***.

Ex. 1001 at 7:4-15.

45. A POSITA would understand the scenario described above, where call legs are pending at the switch is substantially similar to a conventional phone call between two cell phones when the first person places the call, and it is ringing. In such a circumstance, there is a pending call leg because the call has not been accepted yet (because the second person has not answered the phone yet), but a POSITA would, consistent with the specification, still understand the call to be occurring on a "voice channel" because it will be transmitted according to a typical voice channel such as CDMA, GSM, LTE, 3G, and/or 4G (or a similar newer protocol, such as 5G).

46. Thus, a POSITA would understand the "when used to carry voice information" phrase in the specification relates to the fact that protocols like CDMA, GSM, LTE, 3G, and/or 4G can also be used to transport data protocols. For example, when accessing the Internet over a cellphone, a POSITA would know that the

communication would use IP traffic that is transported over a standard cellular protocol such as CDMA, GSM, LTE, 3G, and/or 4G. In such a situation, a POSITA would look to the protocol that is actually set to transmit information (in this case, IP), and not the protocol that is used merely for transport over wires or air waves (in this case, one of the cellular protocols). By contrast, in a voice call, the cellular protocol is actually set to be used to transmit information (the voices of the call participants) and would qualify as a voice channel. Thus, a POSITA would understand that "when used to carry voice information" is distinguishing between circumstances where the voice protocol is set to be used to transmit voice information rather than where the voice protocol is merely used to transport another protocol.

47. I have reviewed Petitioner's exhibits, and the reference describing the SS7 protocol (Ex. 1011) provides support for my opinion. That reference teaches that SS7 can be transported over an "MTP protocol" which is "SS7's native means of packet transport," or, in newer scenarios, "over IP."

Figure 4-18 *Introductory SS7 Protocol Stack*

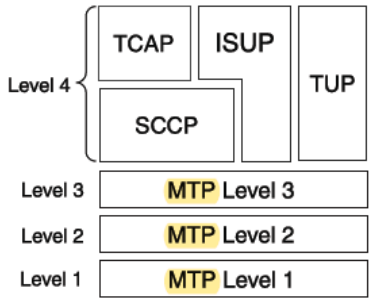

Such a stack uses TDM for transport. This book focuses on traditional SS7 because that is what is implemented. Newer implementations are beginning to appear that use different transport means such as IP and that have associated new protocols to deal with the revised transport.

The SS7 physical layer is called MTP level 1 (MTP1), the data link layer is called MTP level 2 (MTP2), and the network layer is called MTP level 3 (MTP3). Collectively they are called the *Message Transfer Part (MTP)*. The MTP protocol is SS7's native means of packet transport. In recent years there has been an interest in the facility to transport SS7 signaling over IP instead of using SS7's native MTP. This effort has largely been carried out by the Internet Engineering Task Force (IETF) SigTran (Signaling Transport) working group. The protocols derived by the SigTran working group so far are outside the scope of this introductory chapter on SS7. However, full details of SigTran can be found in Chapter 14, "SS7 in the Converged World."

Ex. 1011 at 83. This is consistent with how a POSITA would understand "channels": the focus is not on the underlying protocol(s) used for transport, but on the protocol that is being used to transmit information (whether that information is voice or data, or any other type of information).

48. I disagree with the following statement that appears in the Petition:

> A POSITA would have understood that the encoded message, as described above, containing the relationship number and the third party number (from SLS platform 115 to subscriber TD 110) is automatically transmitted to subscriber TD 110 via a data channel rather than a voice channel because Backhaus discloses that that a voice path is not connected until the subscriber answers the call.

Petition at 25. This statement reflects an understanding of the term "channel" that

is inconsistent with the ’094 Patent and how a POSITA would understand that term. Specifically, this statement is inconsistent with the patent’s teaching that I described above, which expressly and repeatedly describes call legs as occurring on a “voice channel” before the two call legs are bridged together (which is when the voice path would be connected). Ex. 1001 at 7:4-15. Further, as I explained above, a POSITA would understand that the fact that “a voice path is not connected” does not define whether or not a voice channel is being used. A POSITA would understand a conventional call to be using a voice channel when ringing (*i.e.*, before the “voice path” is connected, which only happens when the callee picks up the phone).

49. Thus, for all the reasons I described above, POSITA would understand that a “channel” does not have to be fully connected on both ends to qualify as a channel. Additionally, a POSITA would understand that a channel does not have to be actually transmitting something to qualify as a channel at that moment.

VIII. OVERVIEW OF THE CITED PRIOR ART

50. Here, I provide very brief overviews of the prior art references relied on in the Petition. I discuss these references in more detail in connection with the claim limitations below.

A. Backhaus (Ex. 1005)

51. Backhaus describes routing calls through what it calls a “second line service (‘SLS’)”:

> A method for routing calls between a third party telecommunications device ("TD") and a subscriber TD associated with a primary service and a second line service ("SLS") involves associating the SLS number of the subscriber, the primary number of the subscriber and the primary number of a third party via a common relationship number. Calls directed from a third party to the SLS number of a subscriber are routed to an SLS platform and redirected to the subscriber TD. Calls directed from the subscriber TD to the third party use the relationship number to route the call to the SLS platform. The combination of the primary service number and the relationship number identifies the third party number for call completion. Calls can be directed to and from an SLS number of a subscriber TD using a combination of protocols such as ISUP, CAP and SIP.

Ex. 1005 at Abstract.

52. Backhaus teaches the use of a server—"SLS platform 115"—for processing calls. Ex. 1005 at [0034]. Backhaus does not reference switches at all but does state that calls can be routed via the PSTN. *E.g.*, *id.* at [0032], [0136].

53. Backhaus does not share the '094 Patent's focus on using both voice channels and data channels in relation to a single call. Backhaus does reference data protocols such as "IP" (*e.g.*, *id.* at [0073]), but never describes using both IP and a voice channel for a single call.

B. Taylor (Ex. 1007)

54. The Petition appears to rely on Taylor primarily in relation to its depiction of prior art systems in Figure 1A. That Figure depicts, as a POSITA would already know, that the PSTN includes multiple switches (circles numbered 12 and highlighted in yellow below):

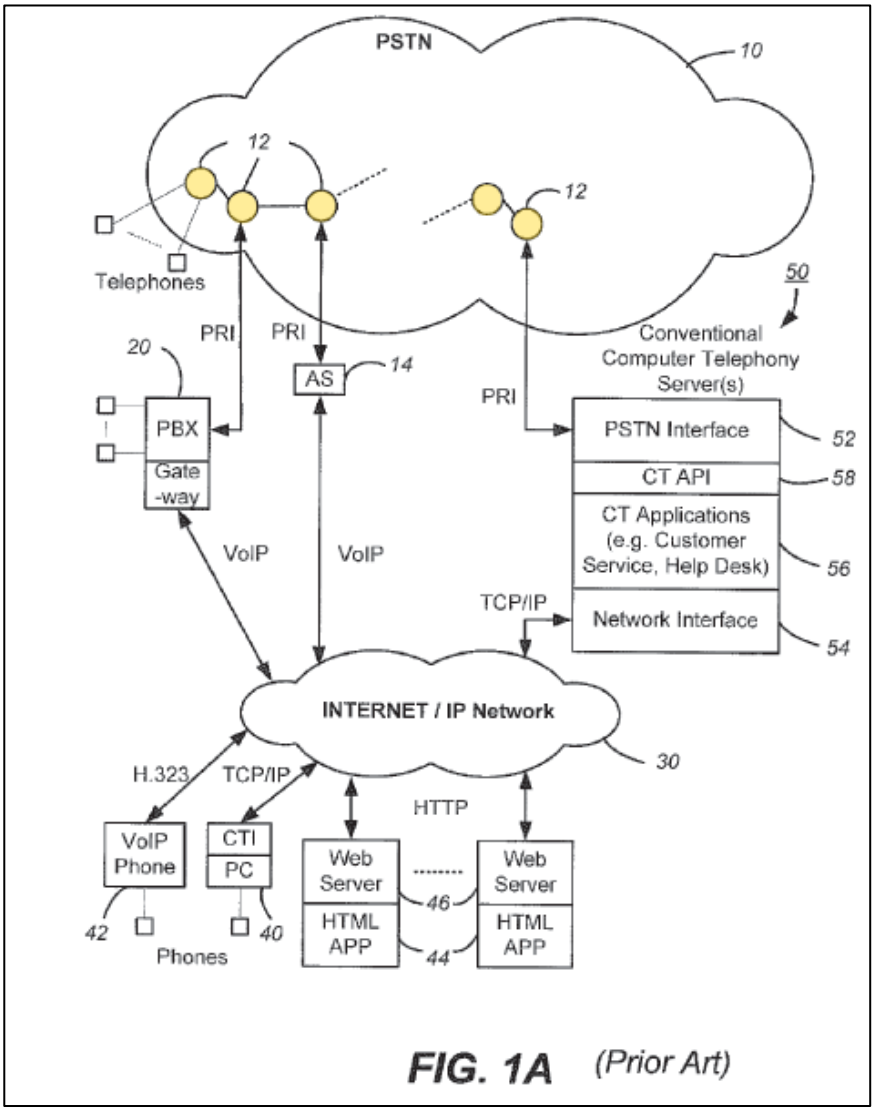

FIG. 1A (Prior Art)

Ex. 1007 at Fig. 1A, [0004] (identifying "switches 12").

C. Saksena (Ex. 1008)

55. Because the Petition does not rely on Saksena for any aspect of claim 1, I do not offer any opinions relating to Saksena.

IX. GROUND 1

A. Backhaus does not anticipate limitation [1.c]'s requirement to transmit the information "via a data channel."

56. Limitation [1.c] recites as follows:

> [1.c] automatically transmitting information that indicates the association of the bridge or access telephone number with each of a plurality of contact telephone numbers to the handset via a data channel;

Ex. 1001 at cl. [1.c].

57. The information recited in limitation [1.c] must be transmitted "via a data channel." Backhaus does not anticipate this aspect of limitation [1.c].

1. The Petition's "first way" fails to disclose transmitting "via a data channel."

58. The Petition's first way relies on Backhaus transmitting the relationship number in the "calling party field of the call" when a third-party makes a call to the subscriber:

> Backhaus discloses this limitation in **a first way**. As discussed in Backhaus, with "the relationship number…ha[ving] been established in connection with subscriber #1 and the calling third party, the SLS platform 115 may proceed to establish the second half of the call—the call from the SLS platform 115 to the subscriber's TD 110" by "plac[ing] the call to the primary number…that points to subscriber TD 110…." (Ex. 1005, [0054].) Backhaus discloses that "**calling party field of the call placed from SLS platform 115 to subscriber TD 110** may contain **a specially encoded message for the SLS phone app running on SLS module 105**," where the calling party field may "**contain the relationship number established by the SLS platform 115**…**and the actual primary number of the calling third party**." (*Id.*, [0055]; *see also id.*, [0010] ("the relationship number and third party calling number combination may be forwarded to the subscriber

> TD, thus enabling an application on the subscriber TD to save the combination in a local database of the subscriber TD."), [0064].)

Petition at 23-24.

59. A POSITA would understand that the "calling party field of the call" is delivered as part "of the call" (as Backhaus teaches), and thus is transmitted on the same voice channel as the call itself, which may be some channel like CDMA, GSM, LTE, 3G, or 4G. Indeed, a POSITA would understand this teaching in Backhaus to be referring to conventional caller ID, where Backhaus describes replacing the actual calling number in the caller ID with the relationship number (possibly with some additional information) so that it will "trigger recognition of the incoming call as a call directed to the SLS number of the subscriber." Ex. 1005 at [0055].

60. A POSITA would be familiar with caller ID, which was well understood in telephony prior to the 2013 timeframe of the '094 Patent. A POSITA would understand that caller ID is delivered over the same channel as the call itself, either over the PSTN or some wireless protocol such as CDMA, GSM, LTE, 3G, or 4G. Thus, a POSITA would understand caller ID to be provided over the same voice channel that the call is being made on.

61. The Petition next alleges the following:

> A POSITA would have understood that the encoded message, as described above, containing the relationship number and the third party number (from SLS platform 115 to subscriber TD 110) is automatically transmitted to subscriber TD 110 via a data channel rather than a voice

> channel because Backhaus discloses that that a voice path is not connected until the subscriber answers the call.

Petition at 25. As I discussed above, this statement is inconsistent with how a POSITA would understand the term "channel." A POSITA would understand that a call still uses a "voice channel" while it is ringing before the call is answered and connected on both ends.

62. The Petition next discusses Backhaus paragraph [0073]. Petition at 25-26.

63. To understand Backhaus paragraph [0073], however, you must understand Backhaus' entire disclosure relating to Figures 4A-4D. Backhaus teaches that "FIGS. 4A-4D collectively illustrate an exemplary method 400 for routing calls between a third party telecommunications device, such as third party TD 120, and a telecommunications device associated with a subscriber to a second line service, such as subscriber device 110." Ex. 1005 at [0062].

64. The disclosure in paragraphs [0071]-[0074] relates to Figure 4D. Figure 4D is only reachable "if the 'no' branch is followed from block 432 of Fig. 4C." Ex. 1005 at [0071]. Figure 4C is only reachable "if the 'no' branch is followed from block 404 of Fig. 4A." *Id.* at [0069].

65. Block 404 of Figure 4A, excerpted below, is a determination "whether the communication was a call that originated from a third party seeking to connect to a subscriber's device, i.e. whether a third party has dialed an SLS number

associated with an active subscriber to the SLS service provided by SLS platform 115." Ex. 1005 at [0062]. Thus, following the "no" branch of block 404 means the communication to the SLS platform is not a call from a third party to the subscriber.

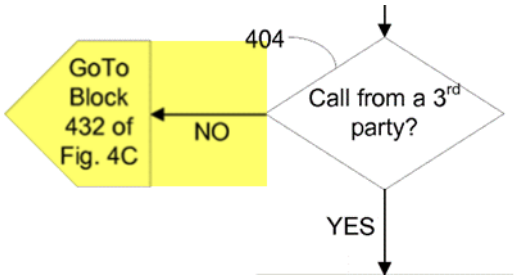

Ex. 1005 at Fig. 4A.

66. Block 432 of Figure 4C, excerpted below is a determination "that the communication is a call that was directed to a relationship number." Ex. 1005 at [0069]. Thus, following the "no" branch of block 432 means the communication to the SLS platform is not a call to a relationship number.

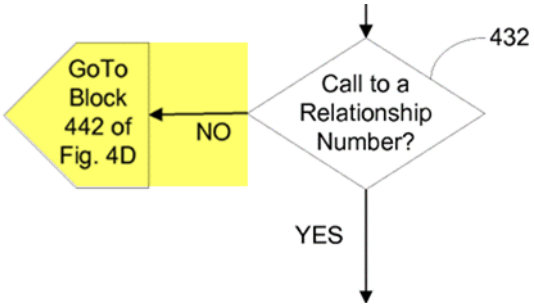

Ex. 1005 at Fig. 4C

67. Thus, the only way to get to Figure 4D is to determine that the communication to the SLS platform is not a call from a third party to a subscriber and also is not a call to a relationship number. A POSITA would therefore understand that the teachings in paragraphs [0071]-[0074] relating to Figure 4D are

unrelated to either an incoming or outgoing call. This is consistent with Backhaus' express teaching that Figure 4D involves a determination "that the communication is a data communication over network 125 that originated from an SLS client of a subscriber TD." Ex. 1005 at [0071]. This is also consistent with Backhaus' disclosure as a whole: Backhaus never describes using both a data protocol and voice protocol in connection with a single call. The discussion of using IP in paragraph [0073] is only after determining that there is no call (in either direction).

68. Accordingly, a POSITA would not rely on paragraph [0073] in connection with the Petition's proposed first way, because the first way involves an incoming call from a third party but paragraph [0073] relates to Figure 4D which is only reachable if you have determined there is ***not*** an incoming call from a third party.

69. These are distinct processing paths in Backhaus that are only reachable with distinct types of communications. A POSITA would understand you cannot mix and match elements from different processing paths, because that is not consistent with the teachings of Backhaus.

2. The Petition's "second way" fails to disclose transmitting "via a data channel."

70. The Petition's second way contends Backhaus provides a relationship number when a subscriber wants to call a third party with no relationship number previously assigned. Petition at 26 (citing Ex. 1005 at [0071]-[0074]).

71. Backhaus states the "determined next available relationship number is returned" in paragraph [0074], but never states what channel or protocol is used to make this transmission.

72. Backhaus teaches that channels such as "cellular data, WiFi, Bluetooth technologies, proprietary wireless or wired technologies … can be used in … sharing information between the SLS module 105 and the SLS platform 115." Ex. 1005 at [0073]. A POSITA would not understand this teaching to mean that the relationship number specifically is transmitted by a data protocol. All a POSITA would understand from this paragraph is that ***some*** communications between the handset and SLS platform involve a data protocol. It could be other information besides the relationship number that is transmitted by IP, such as the user's account setup, any login credentials (*e.g.*, username/password), and/or the initial registration for a secondary (SLS) number. But Backhaus does not state that every communication occurs via a data protocol and does not identify any specific communication that occurs via a data protocol, so a POSITA would not conclude that the relationship number specifically is transmitted by a data protocol.

B. The Petition takes inconsistent positions on what qualifies as a "data channel."

73. As I described above in connection with the Petition's first way for limitation [1.c], the Petition contends that a call leg from the SLS platform to the handset (as part of an incoming call from a third party) is received on a "data channel."

74. In describing that call, Backhaus teaches that the SLS platform makes a call to the handset:

> [0054] Returning to the example, now that the relationship number 1.678.222.0001 has been established in connection with subscriber #1 and the calling third party, the SLS platform 115 may proceed to establish the second half of the call—the call from the SLS platform 115 to the subscriber's TD 110. The SLS platform 115 places the call to the primary number 1.408.544.1212 that points to subscriber TD 110 per its primary service provider 201.

Ex. 1005 at [0054].

75. Backhaus further teaches that call has a "calling party field" with information that can include, among other things, the relationship number:

> [0055] The calling party field of the call placed from SLS platform 115 to subscriber TD 110 may contain a specially encoded message for the SLS phone app running on SLS module 105. In some embodiments, the calling party field may contain the relationship number established by the SLS platform 115 (in this example, 1.678.222.0001) and the actual primary number of the calling third party (in this example, 1.305.229.9999), separated by a dialable separator such as a "star" character. In other embodiments, the calling party field may be populated with "unknown caller" or the like in the event that the relationship number is a new number assigned by the SLS platform 115 and not yet recognized by the SLS phone app (more details regarding such an embodiment is described below relative to FIGS. 4 and 7). Notably, it is envisioned that other embodiments may populate the calling party field, or provide other metadata, that serves to trigger recognition of the incoming call as a call directed to the SLS number of the subscriber. As such, by describing the exemplary embodiment to populate the calling party field with a combination of the relationship number and the third party's actual phone number, the scope of the disclosure will not be limited.

Ex. 1005 at [0055].

76. And Backhaus makes clear that this call is not connected yet. The call is only connected by the SLS platform "[o]nce the subscriber #1 answers":

> [0056] Returning to the example, having recognized that the incoming call is from the SLS platform 115, the SLS module 105 stores the combination of the relationship number 1.678.222.0001 and third party actual number 1.305.229.9999 in the local SLS database 106. To complete the exemplary call, the SLS module 105 may cause the actual phone number associated with the third party TD 120A, 1.305.229.9999, to be rendered on display component 103 as an identification of the calling party and rings the phone. Once the subscriber #1 answers, the SLS platform 115 connects the two legs of the call (leg 1 represented by third party TD 120A to SLS platform 115 and leg 2 represented by SLS platform 115 to subscriber TD 110) by methods known and understood by those of ordinary skill in the art of telecommunications. As non-limiting examples, the calls can be connected via a forward or a bridge, as well as other technologies.

Ex. 1005 at [0056].

77. Thus, for the call the Petition relies on for its first way for limitation [1.c], a POSITA would understand that call to have the following three characteristics: (1) it is a call leg between the SLS platform and subscriber; (2) it has a calling party field; and (3) it has not yet been connected on both ends.

78. For limitation [1.e], the Petition relies on a different call leg that it contends is received over a "second channel." Specifically, the Petition relies on a call leg from the handset to the SLS platform that is made when the subscriber is trying to make an outgoing call to a third-party. Petition at 35-36 (citing Ex. 1005 at [0049] and [0059]). The Petition alleges this call is received over a "voice channel." Petition at 41-42.

79. Regarding the [1.e] call leg, Backhaus teaches that this call is between the handset and SLS platform because the "SLS module 105 [on the handset] … calls the relationship number … [which] routes the call to the SLS platform." Ex. 1005 at [0059].

80. Backhaus explains that this call has a "calling number," which will be the subscriber's primary number, and which is used (in connection with the dialed relationship number) to look up the third-party contact number to dial:

> [0060] When the SLS platform 115 processes this first leg of the call, it may recognize that the ***calling number*** is the subscriber's primary number 1.408.544.1212 (which is associated with the subscriber's SLS number 1.770.555.0001) and the called number is the relationship number 1.678.222.0001. Querying the Subscriber Relationship ID Table 310 in central SLS database 116, the redirection module 117 may apply the following logic: "when primary number 1.408.544.1212 calls relationship number 1.678.222.0001, it is actually SLS number 770.555.0001 calling 1.305.229.9999." The SLS platform 115 may then follow that logic and complete the subscriber's call by calling the actual number 1.305.229.9999 associated with third party TD 120A. Notably, in completing the second leg of the call from Subscriber #1 to the third party associated with third party TD 120A, the SLS platform 115 may cause the calling number to be reflected as the SLS number 1.770.555.0001 instead of the actual primary number of subscriber TD 110.

Ex. 1005 at [0060].

81. The above description in Backhaus paragraph [0060] makes clear that when the call leg from the handset is received by the SLS platform, the call has not yet been connected because it is not connected until the SLS platform looks up the third-party contact and makes the second call leg.

82. Thus, for the call the Petition relies on for limitation [1.e], a POSITA would understand that call to have the following three characteristics: (1) it is a call leg between the SLS platform and subscriber; (2) it has a calling party field; and (3) it has not yet been connected on both ends.

83. Thus, the call that the Petition relies on for its first way for limitation [1.c] and the call the Petition relies on for limitation [1.e] are substantially similar. (1) Both are call legs between the SLS platform and subscriber. (2) Both have a calling party field. And (3) both call legs have not yet been connected on both ends.

84. A POSITA would understand these two call legs to be substantially identical, with the only difference being the direction of the call (the [1.c] call is from the SLS platform to the subscriber handset, whereas the [1.e] call is from the handset to the SLS platform). A POSITA would therefore conclude that both calls would be received on the same channel, because a POSITA would understand that the direction of the call is not relevant to defining the channel the call uses.

C. Backhaus does not anticipate limitation [1.e], [1.f], and [1.g]'s requirement to use the same "switch" for each claim step.

85. Limitations [1.e], [1.f], and [1.g] recite as follows:

> [1.e] receiving, at a switch associated with the server, an outgoing call from the handset to the bridge or access telephone number via a second channel;
>
> [1.f] receiving, at the server, information from the switch indicating the outgoing call is being made to the bridge or access telephone number from the primary telephone number; and

> [1.g] receiving, at the switch, information from the server directing the switch to: (a) connect the outgoing call to a contact telephone number associated with the primary telephone number and bridge or access telephone number pairing, and (b) identify a telephone number from which the outgoing call is being made as the secondary telephone number.

Ex. 1001 at cls. [1.e], [1.f], and [1.g].

86. Limitation [1.e] requires performing a step at "a switch." Limitations [1.f] and [1.g] then require additional steps performed relating to "the switch." Thus, all three limitations must be performed on the same switch.

87. The Petition relies on inherency for this limitation:

> A POSITA would have understood that network 125 necessarily includes the claimed "switch," such as the signal switching points (SSPs, which are knowns as "switches" or "exchanges") included in the disclosed PSTN. (Ex. 1002, ¶82.) Indeed, a POSITA would have understood that a SSP is a necessary part of the PSTN, and "a voice switch" that "processes voice-band traffic."

Petition at 37.

88. I agree, and it is well-known by all POSITAs, that public telephone networks include switches. But the mere fact that switches are known to be part of public telephone networks does not mean that it would be necessary to perform each of limitations [1.e], [1.f], and [1.g] on the same switch.

89. A POSITA would understand that using the same switch is not inherent because it is not the only way to implement Backhaus' system. Backhaus is silent on how it connects to switches. Backhaus merely describes that calls can be routed

over the PSTN, but never describes how the SLS platform is connected to switch(es) or how calls are routed from switch(es) to or from the SLS platform.

90. A POSITA would understand that an alternative design would be for Backhaus to receive a call leg from the handset at a first switch, but then to place the second call leg from the SLS platform to a third-party on a second switch. The calls could then be bridged over Backhaus' SLS platform server.

91. A POSITA would understand this architecture is one technically possible way to implement Backhaus. This implementation would be consistent with Backhaus' statement that it is "SLS platform 115" that "complete[s] the subscriber's call." Ex. 1005 at [0060]; *see also id.* at [0056] ("SLS platform 115 connects the two legs of the call … by methods known and understood by those of ordinary skill in the art of telecommunications. As non-limiting examples, the calls can be connected via a forward or a bridge, as well as other technologies.") In fact, this alternative architecture could even be advantageous, for example as a way to balance the load between different switches.

92. Thus, a POSITA would understand that it is not necessary to use a single switch for each of limitations [1.e], [1.f], and [1.g]. Instead, one switch can be used for the incoming call leg (corresponding to step [1.e]) but a second switch could be used for placing the outgoing call leg (corresponding to step [1.g]). This alternative design would not anticipate because it would not use the same step for

limitations [1.e] and [1.g], and therefore Backhaus does not inherently anticipate.

93. The Petition also refers to the concept of a "local" switch. Petition at 38-40. A POSITA would understand that a "local" switch is not a fixed switch that calls to or from a particular endpoint will always use. Instead, a POSITA would understand that for a given call, each endpoint of the call will connect via their own local switch (which may be the same if the users are geographically close to one another). But a given endpoint would not make and receive all of its calls through the same local switch. For example, with a conventional cell phone, the switch that is local for one call may not be used for a later call if the user has changed locations between the two calls. Or, for server-based systems, if the server software is running at multiple physical locations (as is commonly done to balance loads), the switch used by the software in one instance might not be the same as the switch used in another instance. Thus, a POSITA would not understand the concept of a "local" switch to mean that limitations [1.e], [1.f], and [1.g] must necessarily occur on the same switch.

94. The Petition also cites to the Taylor reference, which I discuss further below in connection with Ground 3. Petition at 39-40. For example, the Petition states "Ex. 1007 shows a local switch that communicates with a server 50." Petition at 39. But nothing in Taylor teaches that an endpoint must necessarily use the same local switch for all calls. A POSITA would understand that Taylor is simply

describing conventional telephony in which multiple switches can be used. In fact, Taylor's Figure 1 clearly depicts that there are multiple switches (below, highlighted yellow) in the network, and it would be possible to implement Backhaus by using multiple switches for different legs of the call.

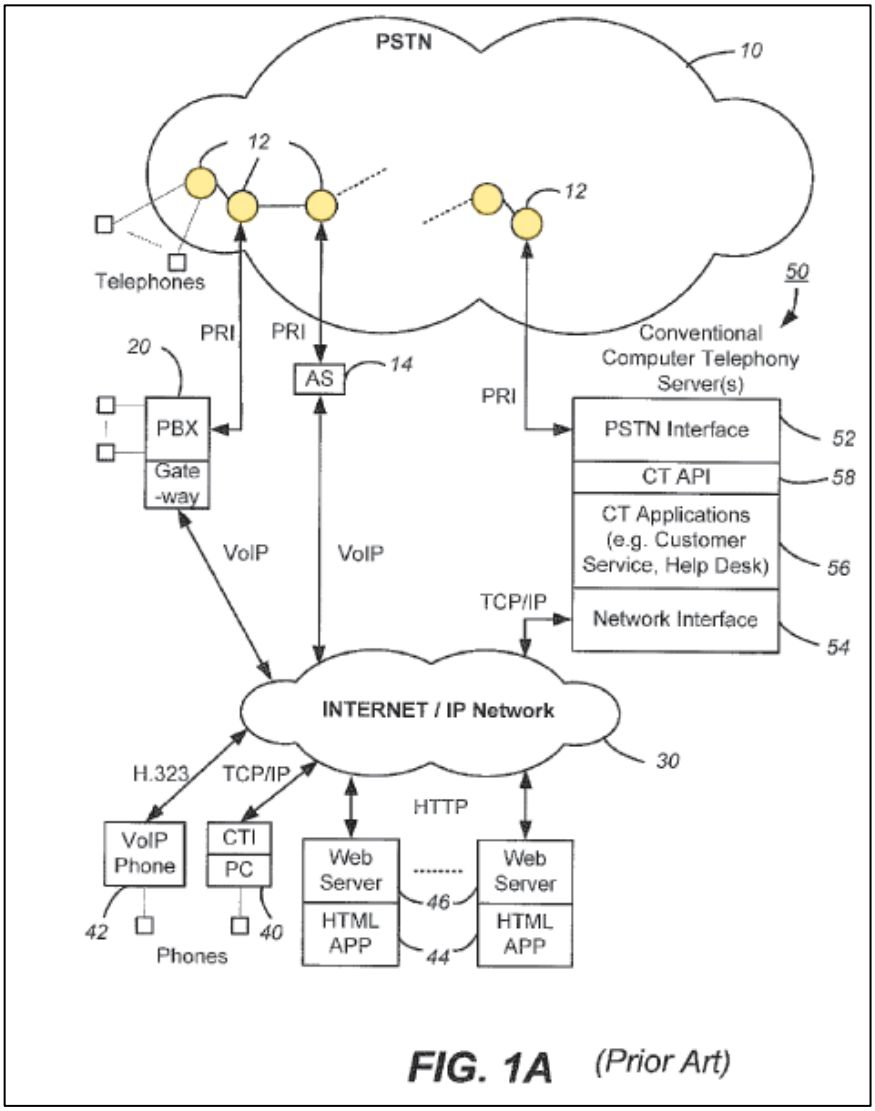

FIG. 1A (Prior Art)

Ex. 1007 at Fig. 1A, [0004] (identifying "switches 12").

D. Backhaus does not anticipate claims 2 or 4.

95. Claims 2 and 4 depend on claim 1 and thus incorporate all of its

requirements. Therefore, Backhaus fails to anticipate claims 2 and 4 for the same reasons it fails to disclose claim 1, which I described above.

X. GROUND 2

A. Backhaus in view of Saksena does not render obvious claim 3.

96. The Petition does not rely on Saksena for any aspect of claim 1. Claim 3 depends on claim 1, and thus incorporates all of its requirements. Therefore, Backhaus and Saksena do not render obvious for all the same reasons that Backhaus fails to disclose claim 1, which I described above.

XI. GROUND 3

A. Backhaus in view of Taylor does not render obvious claim 1.

97. The Petition does not contend that Taylor is relevant to limitation [1.c] and does not provide any separate obviousness argument for that limitation. Thus, Backhaus in view of Taylor does not render obvious claim 1 (or claims 2 and 4, which depend on claim 1) because it fails to disclose [1.c] for the reasons I describe above.

98. With respect to limitations [1.e], [1.f], and [1.g], the Petition relies on "includ[ing] a PSTN interface similar to that discussed in Taylor." Petition at 55-56. Taylor, however, explains that "PSTN interface 52" is an element of "CT server 50." Ex. 1007 at [0008]. Taylor identifies a different element, highlighted below in Fig. 1A, as "switches 12." *Id.* at [0004].

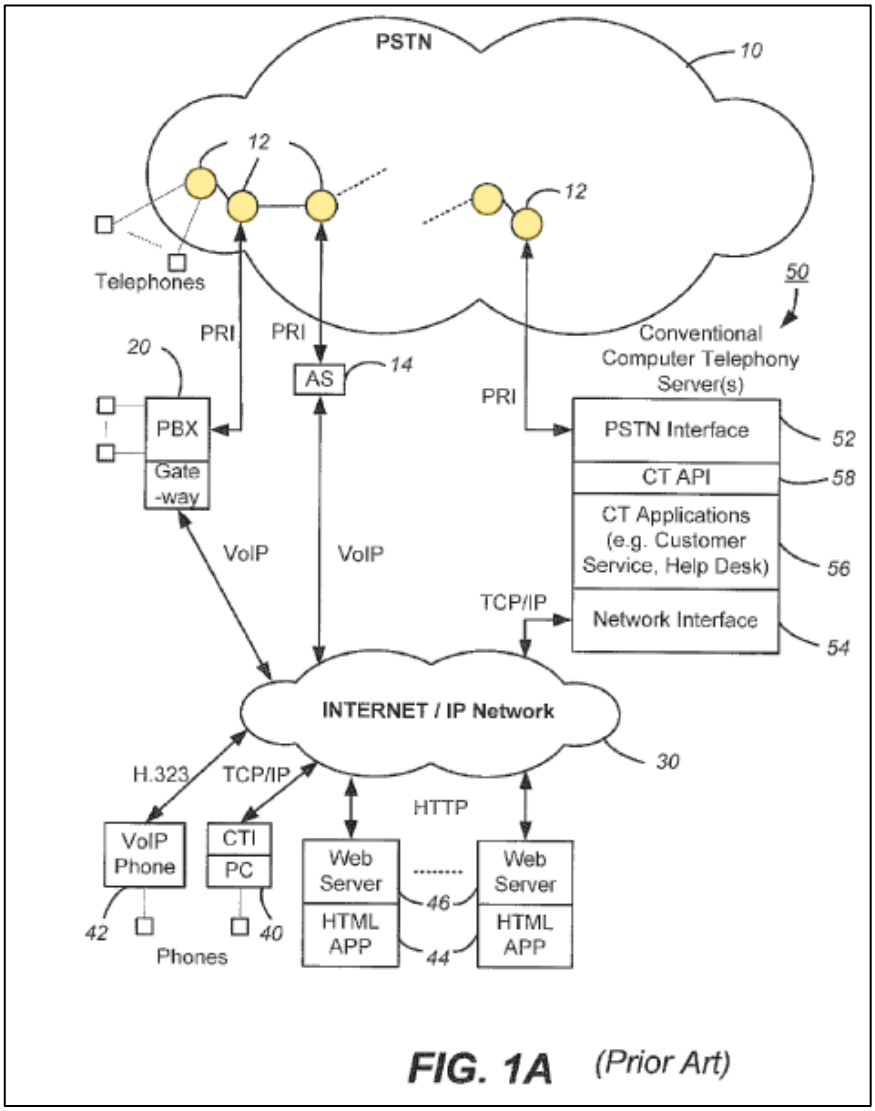

FIG. 1A (Prior Art)

Ex. 1007 at Fig. 1A.

99. Thus, a POSITA would understand, based on Taylor's teachings, that the PSTN interface is not itself a switch. Claim limitations [1.e], [1.f], and [1.g] expressly require a "switch," and therefore Taylor's PSTN interface would not render these limitations obvious.

100. Further, even if the PSTN interface were considered a switch, a POSITA still would not find this combination to render obvious using the same

switch for each of limitations [1.e], [1.f], and [1.g]. As I explained above, multiple switches could be used, and the same would be true for PSTN interfaces – multiple can be used, different ones for different call legs.

101. Finally, although Backhaus does not have an element expressly named "PSTN interface," a POSITA would understand that Backhaus already has its own interface to the PSTN because Backhaus describes that it can place and/or receive calls routed through the PSTN. *E.g.*, Ex. 1005 at [0032], [0136]. The Petition does not identify any reason why a POSITA would replace Backhaus' own existing PSTN interface with Logan's PSTN interface, and I am aware of none.

XII. GROUND 4

A. Backhaus in view of Saksena and Taylor does not render obvious claim 3.

102. Similar to Ground 2, Ground 4 simply adds Saksena, which is not relied on for any aspect of claim 1. Thus, for the same reasons as I described for Ground 3, Ground 4 fails to show obviousness.

XIII. ADDITIONAL REMARKS

103. I currently hold the opinions expressed in this Declaration. But my analysis may continue, and I may acquire additional information and/or attain supplemental insights that may result in added observations.

I hereby declare that all statements made are of my own knowledge are true and that all statements made on information and belief are believed to be true. I further declare that these statements were made with the knowledge that willful false statements and the like so made are punishable by fine or imprisonment, or both, under Section 1001 of the Title 18 of the United States Code and that such willful false statements may jeopardize the validity of this proceeding.

Dated: October 26, 2023

By: _____
Dr. Robert Akl, D.Sc.
Dallas, Texas