UNITED STATES PATENT AND TRADEMARK OFFICE

BEFORE THE PATENT TRIAL AND APPEAL BOARD

GOOGLE LLC,
Petitioner,

v.

FLYPSI, INC. (D/B/A FLYP),
Patent Owner.

Case No. IPR2023-00359
U.S. Patent No. 11,012,554

PATENT OWNER FLYPSI, INC.'S PRELIMINARY RESPONSE

TABLE OF CONTENTS

I. Introduction 1

II. Overview of the '554 Patent 3

III. Level of Skill in the Art 5

IV. Claim Construction 5

V. The Petition fails to establish a reasonable likelihood of success of any Ground. 5

- A. Ground 1: Backhaus does not anticipate the claim's requirement that the same "switch" perform limitations [1.c], [1.d], [1.e], and [1.f]. 5
- B. Ground 1: Backhaus does not anticipate limitation [1.b]'s requirement to automatically transmit information "via a data channel." 12
- C. Ground 1: Backhaus does not anticipate claims 2 or 4. 16
- D. Grounds 2-4 fail for the same reasons as Ground 1 16

VI. The Board should deny the Petition under *Fintiv*. 19

- A. Factor 1: whether the court granted a stay or evidence exists that one may be granted if a proceeding is instituted. 19
- B. Factor 2: proximity of the court's trial date to the Board's projected statutory deadline for a final written decision. 20
- C. Factor 3: investment in the parallel proceeding by the court and the parties. 21
- D. Factor 4: overlap between issues raised in the petition and in the parallel proceeding. 22
- E. Factor 5: whether the Petitioner and the defendant in the parallel proceeding are the same party. 23
- F. Factor 6: other circumstances that impact the Board's exercise of discretion, including the merits. 23

VII. Conclusion. 24

TABLE OF AUTHORITIES

Page(s)

Cases

Apple Inc. v. Fintiv, Inc.,
IPR2020-00019, Paper 11 (PTAB Mar. 20, 2020).....*passim*

CommScope Techs. LLC v. Dali Wireless, Inc.,
IPR2022-01242, Paper 23 (PTAB Feb. 27, 2023).....23

Connell v. Sears, Roebuck & Co.,
722 F.2d 1542 (Fed. Cir. 1983).....1, 2, 6, 12

MEHL/Biophile Int'l Corp. v. Milgraum,
192 F.3d 1362 (Fed. Cir. 1999).....7

Nidec Motor Corp. v. Zhongshan Broad Ocean Motor Co.,
868 F.3d 1013 (Fed. Cir. 2017).....5

Nokia of Am. Corp v. Godo Kaisha IP Bridge 1,
IPR2022-00755, Paper 9 (PTAB Nov. 2, 2022)..... 19, 20, 22, 23

In re Oelrich,
666 F.2d 578 (C.C.P.A. 1981).....7

PersonalWeb Techs., LLC v. Apple, Inc.,
917 F.3d 1376 (Fed. Cir. 2019).....8

Sand Revolution II, LLC v. Cont'l Intermodal Grp. – Trucking LLC,
IPR2019-01393, Paper 24 (PTAB June 16, 2020).....22

Sotera Wireless, Inc. v. Masimo Corp.,
IPR2020-01019, Paper 12 (PTAB Dec. 1, 2020).....22

Structural Rubber Prods. Co. v. Park Rubber Co.,
749 F.2d 707 (Fed. Cir. 1984).....11

Vivid Techs., Inc. v. Am. Sci. & Eng'g, Inc.,
200 F.3d 795 (Fed. Cir. 1999).....5

Xerox Corp. v. Bytemark, Inc.,
IPR2022-00624, Paper 9 (PTAB Aug. 24, 2022).....11

Statutes

35 U.S.C. § 314(a) 19

PATENT OWNER'S EXHIBIT LIST

Ex. No.	Brief Description
2001	Order Denying Petition for Writ of Mandamus, No. 6:22-cv-00031-ADA, *Flypsi, Inc. v. Google LLC*, Case: 23-112, Federal Circuit, Document 19, March 6, 2023
2002	Order Denying Motion to Stay, Case Number: 6:22-cv-00031-ADA, *Flypsi, Inc. v. Google, LLC*, Western District of Texas, March 30, 2023
2003	Amended Scheduling Order, Case Number 6:22-cv-00031-ADA, *Flypsi, Inc. v. Google, LLC*, Western District of Texas, Document 112, April 21, 2023
2004	Lex Machina statistics Judge Alan D Albright of the U.S. District Court for the Western District of Texas. https://law.lexmachina.com/federal-court/district/judge/5198506/cases?pending-

I. Introduction

The '554 patent describes a novel and non-obvious invention allowing users to have multiple phone numbers for a single phone, while preserving caller ID so that the user can, for example, use a secondary phone number as a business phone number and have that number accurately appear as the caller ID on outgoing calls. To accomplish this, the invention transmits information regarding access telephone numbers to the user's phone via a "data channel," to enable the user's handset to make outgoing calls with the desired caller ID by dialing the access telephone number.

Ground 1 of the Petition (upon which all other Grounds depend) argues that Backhaus anticipates this invention, but the Petition fails to meet the exacting standard required for anticipation: that a single prior art reference discloses "all elements of a claimed invention *arranged as in the claim*." *Connell v. Sears, Roebuck & Co.*, 722 F.2d 1542, 1548 (Fed. Cir. 1983) (emphasis added). Backhaus fails to meet this standard for at least two reasons.

First, Backhaus fails to disclose that the same "switch" performs the steps recited in limitations [1.c], [1.d], [1.e], and [1.f], which require that the same "switch" receive or transmit certain information relating to a call. The Petition argues that switches are inherent, but the Petition does not and cannot show that

Backhaus necessarily uses the same switch for each recited claim step, as opposed to, for example, using multiple switches. Thus, Backhaus does not anticipate.

Second, Backhaus fails to disclose transmitting information indicating an access telephone number "via a data channel." The Petition relies on a transmission that is part of the call itself (not a data channel). The Petition also argues that Backhaus generally discloses that unspecified transmissions may occur via IP (an alleged data channel), but this is not enough to show anticipation because it does not show that the claim elements are "arranged as in the claim," *Connell*, 722 F.2d at 1548, which requires showing that the specifically claimed information is transmitted according to the specifically claimed channel (a data channel).

Because Ground 1 fails, the Petition fails to show invalidity of any claim, and the Board should deny the Petition.

Furthermore, the Board should exercise its discretion to deny the Petition under *Fintiv*. The district court litigation is set for trial six months ahead of an expected final written decision (and even median time-to-trial statistics show that trial would be expected to occur 3-7 months before a final written decision). The parties and court have engaged in substantial work in that litigation, and are expected to have almost completed fact discovery by the time of the institution decision here. Petitioner chose to offer only a very narrow stipulation regarding

invalidity grounds it will pursue in the district court upon institution, which means instituting the IPR will do little, if anything, to avoid duplication of work. Finally, the merits of this Petition are far from "compelling" given the deficiencies that are apparent from the face of the prior art and highlighted in this Preliminary Response. This case thus presents a strong case for discretionary denial under *Fintiv*.

II. Overview of the '554 Patent

The '554 patent describes systems and methods for "delivering telephone calls using the combination of a data channel and a voice channel." Ex. 1001, Abstract. The invention of the '554 patent "permit[s] the same handset to be associated with multiple secondary telephone numbers from which calls appear to have been made and to which calls appear to have been placed." *Id.* The specification of the '554 patent describes both incoming calls (calls from a third party to one of multiple telephone numbers associated with a handset) and outgoing calls (calls from one of the telephone numbers associated with a handset to a third party), but the focus of the '554 patent claims is solely on outgoing calls.

The '554 patent describes that a handset may be associated both with a "primary telephone number," such as the one assigned at activation, and one or more "secondary telephone numbers." *Id.*, 5:8-25. Additionally, the '554 patent teaches the use of a "bridge telephone number." *Id.*, 7:66-8:1. Information about

the bridge telephone number is transmitted to the user's handset via a "data channel." *Id.*, 2:31-33, 7:64-65.

When the user places an outgoing call to a contact telephone number, an application on the handset causes the handset to call the bridge telephone number associated with the contact telephone number via a "voice channel." *Id.*, 8:16-22. The "bridge telephone number may be associated with the switch 110, and calls to the bridge telephone number may be automatically routed to this switch." *Id.*, 7:66-8:1. The switch then connects the call to an outgoing "voice channel call" to the contact telephone number, and can "cause[] the secondary telephone number to be displayed as the number from which the call appears to have been placed." *Id.*, 8:26-37.

The '554 patent contrasts the use of data channels, which can allow "communications between the server 100 and the handset 340 over the Internet 316" for example using "IP as a protocol," with the use of voice channels, which allow communications "over the [Public Switched Telephone Network]" that may use "CDMA, GSM or like standards." *Id.*, 4:46-57. In the invention of the '554 patent, only certain functionality is performed via a data channel, such as transmitting the association of a bridge telephone number with each contact telephone number, while other functionality is performed via a voice channel, such as placing an outgoing call from the switch to the contact telephone number.

III. Level of Skill in the Art

For the purposes of this Preliminary Response only, Patent Owner does not dispute the level of skill identified in the Petition (Petition at 4-5) because the prior art fails to invalidate under any possible level of skill.

IV. Claim Construction

The Petition does not propose any constructions. Patent Owner agrees claim construction is unnecessary at this stage because the prior art fails to invalidate under any reasonable construction of the claims. *See Nidec Motor Corp. v. Zhongshan Broad Ocean Motor Co.*, 868 F.3d 1013, 1017 (Fed. Cir. 2017) ("[W]e need only construe terms 'that are in controversy, and only to the extent necessary to resolve the controversy.'" (quoting *Vivid Techs., Inc. v. Am. Sci. & Eng'g, Inc.*, 200 F.3d 795, 803 (Fed. Cir. 1999))).

V. The Petition fails to establish a reasonable likelihood of success of any Ground.

A. Ground 1: Backhaus does not anticipate the claim's requirement that the same "switch" perform limitations [1.c], [1.d], [1.e], and [1.f].

Limitations [1.c], [1.d], [1.e], and [1.f] recite as follows:

> [1.c] automatically associating the telephone access number with a switch associated with the server;
>
> [1.d] receiving, at the switch associated with the server, an outgoing call from the mobile device to the access telephone number via a second channel;

> [1.e] receiving, at the server, information from the switch indicating the outgoing call is being made to the access telephone number from the primary telephone number; and
>
> [1.f] receiving, at the switch, information from the server directing the switch to: (a) connect the outgoing call to a contact telephone number indicated by the mobile device, and (b) identify a telephone number from which the outgoing call is being made as the secondary telephone number.

Thus, each of limitations [1.d] through [1.f] requires the same "switch" to send or receive information related to the call. Limitation [1.c] introduces the switch using the phrase "a switch associated with the server." Limitations [1.d], [1.e], and [1.f] all refer to "the switch," which refers back to the same switch identified in limitation [1.c]. Thus, the same switch must be shown to meet the requirements of limitations [1.c] through [1.f] in order to anticipate the claims. *Connell*, 722 F.2d at 1548.

The Petition does not contend that Backhaus discloses any switch, and it does not. Instead, the Petition relies on inherency, arguing: "[a] POSITA would have understood that network 125 necessarily includes the claimed 'switch,' such as the signal switching points (SSPs, which are knowns as 'switches' or 'exchanges') included in the disclosed PSTN." Petition at 28. But even if the

Petition is correct that the network necessarily includes a switch, that would still be insufficient to prove anticipation. Inherency requires that the prior art "necessarily functions in accordance with, or includes, the claimed limitations." *MEHL/Biophile Int'l Corp. v. Milgraum*, 192 F.3d 1362, 1365 (Fed. Cir. 1999). Inherency "may not be established by probabilities or possibilities. The mere fact that a certain thing *may* result from a given set of circumstances is not sufficient." *Id.* (original emphasis) (quoting *In re Oelrich*, 666 F.2d 578, 581 (C.C.P.A. 1981)).

Here, the Petition's inherency argument fails because using the same switch to perform all four limitations is merely a possibility or a probability. It is not *necessary*, and therefore it is not inherent. Indeed, alternative possible arrangements are readily apparent, such as using two different switches. For example, the call could be received at a first switch (as the Petition alleges in relation to limitation [1.d]), but the Backhaus server could direct a *different* switch to connect the outgoing call (conflicting with limitation [1.f]). Indeed, evidence cited in the Petition confirms that different switches can be used because "any switch in the United States could route signaling to any other switch in the country." Ex. 1011 at 40 (describing "Direct Distance Dialing," which it alleges was introduced in "the 1950s"). That same evidence identifies yet another alternative: using "at least one intermediate node," which would again involve multiple switches. *Id.* at 53. The Petition does not offer any reason why Backhaus

would necessarily use the same switch (as required by the claims), rather than using multiple switches in the network (as was known in the art). The fact that these alternative designs are available confirms that the Petition cannot show inherency. *See, e.g.*, *PersonalWeb Techs., LLC v. Apple, Inc.*, 917 F.3d 1376, 1382 (Fed. Cir. 2019) (overturning the Board's inherency finding where there was "an equally plausible, if not more plausible, understanding" of the prior art, such that it did not necessarily disclose the claim limitation).

The Petition's own argument further confirms its failure to prove inherency. For example, the Petition identifies multiple switches in the PSTN, including at least "a calling party's local switch and a destination's local switch." Petition at 29. The Petition further relies on the Taylor reference, *a completely separate reference from Backhaus*, which depicts a network with at least five switches, as highlighted in yellow below:

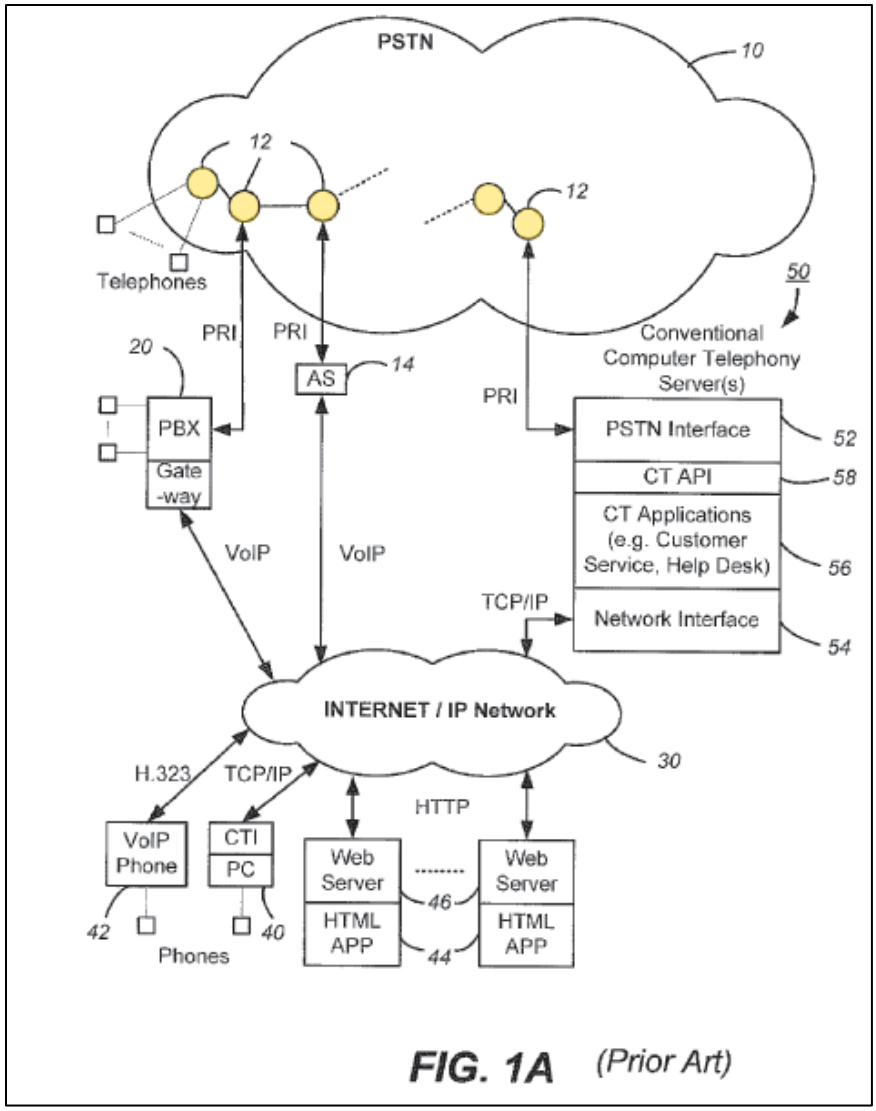

FIG. 1A (Prior Art)

Ex. 1007, Fig. 1A. The Petition offers no reason why Backhaus must necessarily use any of the teachings of Taylor and furthermore fails to demonstrate that Taylor itself must use the same switch. To the contrary, as shown in Figure 1A of Taylor, the prior art makes clear that there are multiple switches in the network that may be used in connection with a call.

Furthermore, for limitation [1.f], the Petition argues that "Backhaus discloses that the SLS platform 115 completes the subscriber's outgoing call by

calling the third party's number." Petition at 37 (quoting Ex. 1005, [0060] ("The SLS platform 115 may then follow that logic and complete the subscriber's call by calling the actual number … associated with third party TD 120A.")). But this argument, and the quote in Backhaus it relies upon, is inconsistent with the Petition's identification of the "local switch" as satisfying limitations [1.c], [1.d], and [1.e]. *See, e.g.*, Petition at 27, 29-31, 33, 35-36. The Petition offers no reason to disregard Backhaus's express teaching that it is the "SLS platform"—not any switch—that will "complete the subscriber's call by calling the actual number." Ex. 1005, [0060] (quoted in Petition at 37). Even if it could overcome this teaching, the Petition offers no reason why Backhaus would necessarily use the same switch as the "local switch" allegedly used in satisfying limitations [1.c], [1.d], and [1.e]. Nor is there any reason to believe the same switch would be "local" to both the user and the SLS platform. To the contrary, Backhaus teaches that the SLS platform may be connected to the subscriber's device by "a first provider network" (Ex. 1005, [0038]), and a POSITA would have readily understood that provider networks could span vast distances (e.g., across the US), such that the two ends of a call would not necessarily use the same "local" switch.

Finally, the Petition attempts to rely on alleged admissions that switches were well-known. *E.g.*, Petition at 29 & n.7. But even if switches were well-known generally, that does not mean that the specific architecture of the claims—

i.e., a single switch for performing the functions recited in each of limitations [1.c] through [1.f]—was well known. The Petition does not identify any admission as to this specific architecture. Mere general admissions that switches were known is insufficient to prove anticipation because they do not show all the claim elements in a "single prior art reference" as required for anticipation. *See Structural Rubber Prods. Co. v. Park Rubber Co.*, 749 F.2d 707, 716 (Fed. Cir. 1984) (for anticipation, rejecting argument that "missing elements may be supplied by the knowledge of one skilled in the art").

The expert declaration submitted with the Petition does not show that Backhaus anticipates limitations [1.c], [1.d], [1.e], or [1.f]. *See* Ex. 1002, ¶¶ 71-84. To the contrary, the expert declaration is substantially identical to the Petition, and thus suffers from the same failures described above. Moreover, such a conclusory declaration is entitled to little, if any, weight. *See Xerox Corp. v. Bytemark, Inc.*, IPR2022-00624, Paper 9 at 15 (PTAB Aug. 24, 2022) (precedential) ("We have reviewed this excerpt from Dr. Jones' declaration and note that it merely repeats, verbatim, the conclusory assertion for which it is offered to support. … Thus, the cited declaration testimony is conclusory and unsupported, adds little to the conclusory assertion for which it is offered to support, and is entitled to little weight.").

The Petition therefore fails to show that Backhaus anticipates limitations [1.c] through [1.f], and thus Ground 1 fails to show anticipation of any claim.

B. Ground 1: Backhaus does not anticipate limitation [1.b]'s requirement to automatically transmit information "via a data channel."

Limitation [1.b] recites "automatically transmitting information that indicates an access telephone number to the mobile device via a data channel." As discussed above in the Overview of the '554 Patent (Section II), one of the salient features of the '554 patent invention is a precise arrangement in which certain transmissions occur "via a data channel," while other transmissions occur "via a second channel" (e.g., a voice channel). To show anticipation, the Petition must show that Backhaus discloses all limitations of the claim as "arranged as in the claim," i.e., that the specifically recited "information that indicates an access telephone number" is transmitted "via a data channel." *Connell*, 722 F.2d at 1548. The Petition has failed to make this showing, and thus Backhaus does not anticipate.

The Petition alleges, under its first theory, that the information is transmitted via a data channel because the "calling party field of the call" may include the relationship number. Petition at 23 (quoting Ex. 1005, [0055]). But there is no teaching in Backhaus, and no argument in the Petition, that this "calling party field of the call" is a "data channel" or that it is any different from the call itself (e.g., a

voice channel). To the contrary, the plain language used by Backhaus—"calling party field *of the call*"—confirms this field is part of the call itself. Ex. 1005, [0055] (emphasis added). Furthermore, the surrounding teachings in Backhaus further support that this "calling party field" is part of the call itself. Backhaus begins describing an incoming call scenario in paragraph 52, where the third party making the incoming call does not yet have an assigned relationship number. *See id.*, [0052]. In paragraph 53, the relationship number is created. *Id.*, [0053]. Then, in paragraph 54, "SLS platform 115 places the call to the primary number … per its primary service provider 201." *Id.*, [0054]. Thus, the "calling party field of the call" in paragraph 55, which the Petition relies on, is part of the call itself.

The Petition further alleges that "[a] POSITA would have understood that the encoded message … is automatically transmitted … via a data channel rather than a voice channel because Backhaus discloses that that [sic] a voice path is not connected until the subscriber answers the call." Petition at 24 (citing Ex. 1005, [0052], [0056]). But this argument is not consistent with the claim language. The claim recites that the recited information is transmitted via a "data channel." The Petition's argument, however, focuses on when a *voice path* for an incoming call is connected. The '554 patent concerns outgoing calls, and the claims therefore never require that an incoming call is ever connected via a voice path. Thus, the

Petition's argument regarding the timing of an incoming *voice path* being connected is immaterial to whether a transmission occurs via a "data channel."

Moreover, the Petition's argument also fails as a matter of common sense. It is true that, when making phone calls—including on conventional, landline phones—"a voice path is not connected until the subscriber answers the call." Petition at 24. But the fact that the voice path is not connected until the call is answered does not mean that there is a separate "data channel" being used prior to the moment of connection. The Petition fails to justify this leap in logic or the introduction of a second channel not mentioned in Backhaus's paragraphs 52-56. Nor does the Petition argue that the use of a data channel for this particular transmission is somehow inherent. The Petition merely offers an unsupported conclusion, which cannot meet Petitioner's burden of showing obviousness.

The Petition proceeds to argue that "Backhaus discloses that communication protocols, including IP-based communications ('data channel'), may be used for establishing the relationship between various numbers and associated databases (as described above)." Petition at 24-25 (citing Ex. 1005, [0073]). But this argument is not enough for anticipation, which requires showing that the specific communication recited in the claim occurs via a data channel. The fact that, in Backhaus, some other communications (indeed, even that some unspecified communications relating to the "relationship between various numbers") *may*

occur via an alleged "data channel" is immaterial. For anticipation, the specific communication recited in limitation [1.b] must occur via the data channel, and paragraph 73 of Backhaus does not reference any specific communications, much less the specific functionality the Petition relies on. *See* Ex. 1005, [0073].

The Petition next argues, under its second theory for limitation [1.b], that the SLS platform then "returns the next available relationship number to TD 110." Petition at 25 (citing Ex. 1005, [0074]). The Petition does not ever appear to contend this *specific* transmission occurs "via a data channel." *See id.* at 25-26. The cited portion of Backhaus does not identify any specific channel as being used for this transmission. *See* Ex. 1005, [0074]. The Petition argues that "TD 110 may communicate with SLS platform 115 using various protocols/mechanisms" that allegedly include IP, cellular, Wi-Fi and other protocols. Petition at 25-26 (citing Ex. 1005, [0072]-[0073]). But the mere fact that Backhaus describes that unspecified communications can occur via various channels is not enough for anticipation: Backhaus must teach the specific arrangement of the claims, in which specific transmissions occur via a "data channel" and other transmissions occur via a "second channel." Backhaus contains no such teaching, and thus fails to anticipate limitation [1.b]'s requirement that a specific transmission occur "via a data channel."

As above, the Petition's expert declaration for limitation [1.b] (Ex. 1002, ¶¶ 64-70) is substantially identical to the Petition's argument, and thus fails to show anticipation for the same reasons.

The Petition therefore fails to show that Backhaus anticipates this part of limitation [1.b], and thus Ground 1 fails to show anticipation of any claim.

C. Ground 1: Backhaus does not anticipate claims 2 or 4.

Claims 2 and 4 depend on claim 1 and thus incorporate all of claim 1's requirements. Because Backhaus does not anticipate claim 1, it cannot anticipate claims 2 or 4.

D. Grounds 2-4 fail for the same reasons as Ground 1.

Ground 2 relates solely to claim 3, which ultimately depends from claim 1 and incorporates all of its requirements. *See* Petition at 43-47. The Petition does not allege that any disclosure in Saksena is relevant to claim 1. *Id.* Nor does the Petition contend or argue that any aspect of claim 1 would be obvious based on Backhaus in combination with Saksena. *Id.* Thus, Ground 2 incorporates all the flaws of Ground 1 and fails for the same reasons that Backhaus fails to anticipate claim 1.

For Grounds 3 and 4, the Petition relies on Taylor in relation to the "switch" recited in limitations [1.c] through [1.f]. *See* Petition at 47-51. The Petition does not contend that any disclosure in Taylor is relevant to limitation [1.b]. *Id.* Nor

does the Petition argue that any aspect of limitation [1.b] would be obvious based on Backhaus in combination with Taylor (with or without Saksena). *Id.* Thus, Grounds 3 and 4 incorporate the same flaws of Ground 1 with respect to limitation [1.b] and fail for the same reason that Backhaus fails to anticipate this limitation of claim 1.

But even setting those flaws aside, Taylor fails to teach one single "switch" performing limitations [1.c], [1.d], [1.e], and [1.f] and, thus, the combination of Backhaus and Taylor would not have rendered claim 1 obvious. In particular, Taylor expressly depicts that a network consists of multiple switches, such as the five shown in Figure 1A:

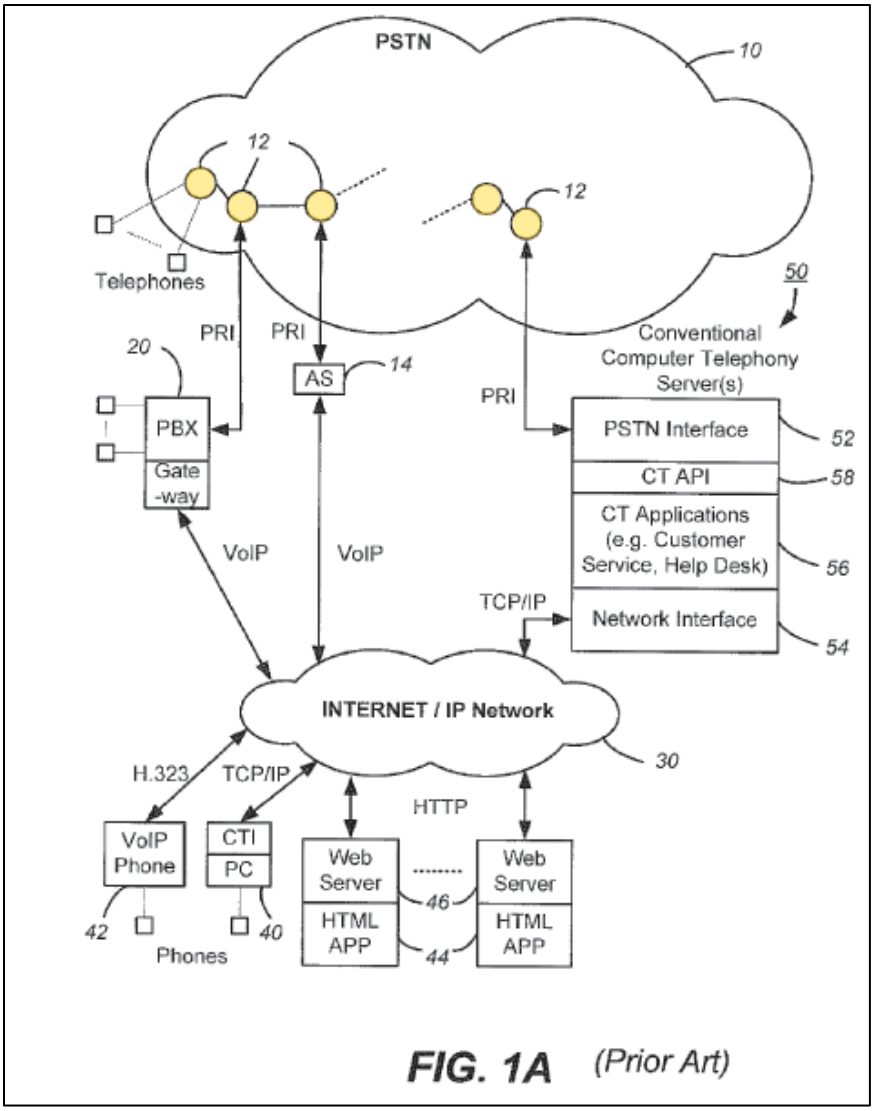

FIG. 1A (Prior Art)

Ex. 1007, Fig. 1A. The Petition does not even attempt to show that it would have been obvious to use the same switch for the functionalities listed in limitations [1.c] through [1.f]. Instead, the Petition merely alleges that "a POSITA would have been motivated to connect SLS platform 115 with the PSTN and to also include a PSTN interface." Petition at 50. The Petition also relies, in part, on alleged admissions that switches were well-known generally. *Id.* at 49. But merely including a "PSTN" or generally well-known switches does not render

obvious the specific architecture of the claims, which require using the same switch for the specific functionality recited in limitations [1.c] through [1.f]. The Petition offers no reason why that specific architecture would be obvious and there is none.

Thus, Grounds 3 and 4 fail for the same reasons that Backhaus fails to anticipate claim 1.

VI. The Board should deny the Petition under *Fintiv*.

The Board should exercise its discretion to deny institution under 35 U.S.C. § 314(a), in view of *Apple Inc. v. Fintiv, Inc.*, IPR2020-00019, Paper 11 (PTAB Mar. 20, 2020) (precedential) ("*Fintiv*") and the USPTO Memorandum, Interim Procedure for Discretionary Denials in AIA Post-Grant Proceedings with Parallel District Court Litigation ("Guidance Memo") (June 21, 2022).

A. Factor 1: whether the court granted a stay or evidence exists that one may be granted if a proceeding is instituted.

The Petition's sole argument under this factor was based on its mandamus petition relating to a motion to transfer, which has since been denied (Exhibit 2001), and its motion for stay relating to that mandamus petition, which has also been denied (Exhibit 2002). As the Petition concedes, the pending litigation is not stayed. There is no longer any pending motion to stay, so this factor is neutral. *Nokia of Am. Corp v. Godo Kaisha IP Bridge 1*, IPR2022-00755, Paper 9 at 9

(PTAB Nov. 2, 2022) ("Because neither party has requested a stay pending this proceeding, we determine that Factor 1 is neutral.").

B. Factor 2: proximity of the court's trial date to the Board's projected statutory deadline for a final written decision.

The case is set for trial on February 19, 2024. Ex. 2003. Trial is thus set to occur around six months before the expected final written decision date of August 8, 2024. Although the Guidance Memo does indicate that scheduled trial dates may not always be reliable, here the close proximity of the trial date suggests that it is more likely to be accurate. Further, the court in the district court litigation has already denied a motion to stay and both the court and the parties have made substantial progress in the case (*see* Factor 3 below), further supporting that the trial date is more likely to be accurate. *See Nokia*, IPR2022-00755, Paper 9 at 10 (where trial is scheduled shortly after institution decision, and "Petitioner offers no evidence that the trial in the Texas case will be delayed significantly," holding this factor weighs in favor of denying the Petition).

The Petition bases its argument on median time-to-trial statistics for the Western District of Texas. But even applying the Petition's statistics of 28 months, trial would occur in May 2024, and the expected final written decision date is August 8, 2024. Thus, trial would still precede the final written decision by around three months, which weighs in favor of denial. Further, the Petition relies on time-to-trial statistics for the entire Western District of Texas, but more specific

statistics for Judge Albright, who is presiding over the case, show that trial is likely to occur faster. *See* Ex. 2004 (Lex Machina statistics showing Judge Albright's median time-to-trial is 688 days, which is about 23 months). Applying those more-specific statistics, trial would occur in December 2023 or January 2024, which is at least seven months before the expected final written decision date in this IPR.

Thus, the proximity of trial—under either the currently-set trial date, the less-specific time-to-trial statistics, or the more-specific time-to-trial statistics—weighs in favor of denying the Petition.

C. Factor 3: investment in the parallel proceeding by the court and the parties.

The Petition's sole argument under this factor is the contention that "[t]he district court case is in the early stages." Petition at 53. This is simply not true. The parties have invested significant time and resources in the district court litigation. For example, the court has performed claim construction, decided a motion to transfer, and decided a motion to stay. The parties have engaged in substantial discovery, including production and review of source code, depositions, service of final contentions, written discovery, and document production. Further, by the time an institution decision would occur in this IPR, the parties are scheduled to be just weeks away from completing fact discovery (August 22, 2003), with expert discovery set to close in October 2023, just a couple months after the institution date. Ex. 2003. Thus, at the time of institution, the litigation

will be at an extremely advanced stage, with discovery nearly over. This factor, therefore, strongly weighs in favor of denying the Petition. *See Nokia*, IPR2022-00755, Paper 9 at 11 ("The record shows that the parties' and the District Court's investment in the Texas case has been extensive, as all work except for the trial itself appears to be complete. This factor weighs heavily in favor of exercising our discretion to deny the Petition.").

D. Factor 4: overlap between issues raised in the petition and in the parallel proceeding.

Petitioner has offered only that it "will not pursue the IPR grounds in the district court litigation" (Petition at 53), but has not offered the broader stipulation endorsed by the Board in *Sotera Wireless, Inc. v. Masimo Corp.*, IPR2020-01019, Paper 12 at 18-19 (PTAB Dec. 1, 2020) (precedential as to § II.A) (stipulation also included not raising "any other ground … that was raised or could have been reasonably raised in an IPR").

The Board has recognized that this narrower stipulation only mitigates concerns about overlap "to some degree" and thus, at best, only "weighs marginally in favor of not exercising discretion to deny institution." *Sand Revolution II, LLC v. Cont'l Intermodal Grp. – Trucking LLC*, IPR2019-01393, Paper 24 at 12 (PTAB June 16, 2020) (informative). Moreover, as the Board has recognized, the Guidance Memo "does not suggest that we should refrain from denying the Petition on the basis of Petitioner's narrower stipulation." *Nokia*,

IPR2022-00755, Paper 9 at 13 (denying institution under *Fintiv* and holding that identical stipulation "is unlikely to significantly prevent our duplication of work" and thus this factor was neutral).

E. Factor 5: whether the Petitioner and the defendant in the parallel proceeding are the same party.

The Petitioner and Patent Owner are the same parties in the district court litigation, so this factor weighs in favor of exercising discretion to deny the Petition. *Nokia*, IPR2022-00755, Paper 9 at 13.

F. Factor 6: other circumstances that impact the Board's exercise of discretion, including the merits.

The Petition provides virtually no analysis of Factor 6, asserting—without any explanation—that "the merits of Petitioner's arguments are compelling." Petition at 54. As the Director recently confirmed in a precedential decision, the compelling merits standard "is a higher standard than the standard for institution set by statute" and requires specific analysis explaining how the standard is met—"[m]erely pointing to [] analysis under the lower institution standard is insufficient." *CommScope Techs. LLC v. Dali Wireless, Inc.*, IPR2022-01242, Paper 23 at 3-5 (PTAB Feb. 27, 2023) (precedential). The compelling merits standard requires that "the evidence, if unrebutted in trial, would plainly lead to a conclusion that one or more claims are unpatentable by a preponderance of the evidence." Guidance Memo at 4.

This Petition plainly fails to satisfy the compelling merits standard. For the reasons explained above, the evidence does not lead to a conclusion of invalidity because the primary reference Backhaus fails to disclose limitations [1.b], [1.c] [1.d], [1.e], or [1.f] in a single prior art reference as those elements are arranged in the claims of the '554 patent, which is Petitioner's burden under the law for anticipation. This failure is apparent from the face of the prior art, as explained above, and the Board can reach this conclusion without relying on any rebuttal expert or evidence. More evidence of the failure to meet the compelling merits standard is that the expert declaration, at least for the key disputed limitations, is substantially identical to the Petition, without any further analysis or explanation of the knowledge of a POSITA. As explained above, the Board should give little weight to this conclusory declaration and the fact that Petitioner submitted such a conclusory declaration highlights the weakness of its Petition. This factor, therefore, weighs in favor of denial.

VII. Conclusion

For at least the foregoing reasons, the Petition has failed to show that any claim is invalid, and the Board should deny the Petition. Further, the Board should exercise its discretion to deny the Petition under *Fintiv*.

Dated: May 8, 2023

/Louis L. Campbell/
Louis L. Campbell (Reg. No. 59,963)
WINSTON & STRAWN LLP
255 Shoreline Dr., Ste. 520
Redwood City, CA 94065
llcampbell@winston.com
T: 650.858.6500, F: 650.858.6550

Lead Counsel for Patent Owner
Flypsi, Inc. (d/b/a Flyp)

CERTIFICATE OF COMPLIANCE

This preliminary response complies with the word count limits set forth in 37 C.F.R. § 42.24(a)(1)(i) & (b)(1), because this preliminary response contains 5,117 words, excluding the parts of the preliminary response exempted by 37 C.F.R. § 42.24(a)(1) and determined using the word count provided by Microsoft Word, which was used to prepare this preliminary response.

Dated: May 8, 2023

/Louis L. Campbell/
Louis L. Campbell (Reg. No. 59,963)
WINSTON & STRAWN LLP
255 Shoreline Dr., Ste. 520
Redwood City, CA 94065
llcampbell@winston.com
T: 650.858.6500, F: 650.858.6550

Lead Counsel for Patent Owner
Flypsi, Inc. (d/b/a Flyp)

CERTIFICATE OF SERVICE

The undersigned hereby certifies that the foregoing PATENT OWNER FLYPSI, INC.'S PRELIMINARY RESPONSE and Exhibits 2001-2004 were served electronically via email on May 8, 2023, in their entirety on the following counsel of record:

Naveen Modi (Reg. # 46,224)
Joseph E. Palys (Reg. # 46,508)
Daniel Zeilberger (Reg. # 65,349)
Howard Herr (*pro hac vice* to be filed)
Puja Patel (*pro hac vice* to be filed)
PAUL HASTINGS LLP
2050 M St NW,
Washington, D.C. 20036
Telephone: (202) 551-1700
Fax: (202) 551-1705
PH-Google-Flypsi-IPR@paulhastings.com
naveenmodi@paulhastings.com
josephpalys@paulhastings.com
danielzeilberger@paulhastings.com
howardherr@paulhastings.com
pujapatel@paulhastings.com

Dated: May 8, 2023

/Louis L. Campbell/
Louis L. Campbell (Reg. No. 59,963)
WINSTON & STRAWN LLP
255 Shoreline Dr., Ste. 520
Redwood City, CA 94065
llcampbell@winston.com
T: 650.858.6500, F: 650.858.6550

Lead Counsel for Patent Owner Flypsi, Inc. (d/b/a Flyp)