UNITED STATES PATENT AND TRADEMARK OFFICE

BEFORE THE PATENT TRIAL AND APPEAL BOARD

GOOGLE LLC,
Petitioner,

v.

FLYPSI, INC. (D/B/A FLYP),
Patent Owner.

Case No. IPR2023-00359
U.S. Patent No. 11,012,554

PATENT OWNER FLYPSI, INC.'S PATENT OWNER RESPONSE

TABLE OF CONTENTS

I. Introduction 1

II. Overview of the '554 Patent 4

III. Level of Skill in the Art 5

IV. Claim Construction 6

A. "channel" 6

V. The Petition fails to establish the invalidity of any claim. 13

A. Ground 1: Backhaus does not anticipate limitation [1.b]'s requirement to automatically transmit information "via a data channel." 14

1. The Petition's "first way" fails to anticipate because the caller ID field is part of a call, and thus not a "data channel" as properly construed. 15

2. The Petition's "first way" fails to anticipate even under the Petition's improper construction. 20

3. The Petition's "second way" fails to anticipate because the Petition fails to show the use of a "data channel" under any possible construction. 21

B. Ground 1: The Petition fails to show anticipation because it takes internally contradictory positions on the "channel" limitations. 23

C. Ground 1: Backhaus does not anticipate the claim's requirement that the same "switch" perform limitations [1.c], [1.d], [1.e], and [1.f]. 28

D. Ground 1: Backhaus does not anticipate claims 2 or 4. 34

E. Ground 2 fails for the same reasons as Ground 1. 34

F. Grounds 3-4 fail for the same reasons as Ground 1. 34

1. Grounds 3-4 fail to render obvious [1.b] and rely on the same inconsistent position as Ground 1 regarding the "channel" terms. 34

2. Grounds 3-4 fail to render obvious the use of a single "switch" for limitations [1.c], [1.d], [1.e], and [1.f].....35

G. The Petition's conclusory expert declaration should be disregarded. 38

VI. Conclusion.....47

TABLE OF AUTHORITIES

Page(s)

Cases

Budde v. Harley-Davidson, Inc.,
250 F.3d 1369 (Fed. Cir. 2001) 11

Connell v. Sears, Roebuck & Co.,
722 F.2d 1542 (Fed. Cir. 1983) 1, 14, 15, 29

Kennametal, Inc. v. Ingersoll Cutting Tool Co.,
780 F.3d 1376 (Fed. Cir. 2015) 19

MEHL/Biophile Int'l Corp. v. Milgraum,
192 F.3d 1362 (Fed. Cir. 1999) 29

Nidec Motor Corp. v. Zhongshan Broad Ocean Motor Co.,
868 F.3d 1013 (Fed. Cir. 2017) 8

In re Oelrich,
666 F.2d 578 (C.C.P.A. 1981) 29

PersonalWeb Techs., LLC v. Apple, Inc.,
917 F.3d 1376 (Fed. Cir. 2019) 30

Structural Rubber Prods. Co. v. Park Rubber Co.,
749 F.2d 707 (Fed. Cir. 1984) 32

Vitronics Corp. v. Conceptronic, Inc.,
90 F.3d 1576 (Fed. Cir. 1996) 12

Vivid Techs., Inc. v. Am. Sci. & Eng'g, Inc.,
200 F.3d 795 (Fed. Cir. 1999) 9

Xerox Corp. v. Bytemark, Inc.,
IPR2022-00624, Paper 9 (PTAB Aug. 24, 2022) 3

PATENT OWNER'S EXHIBIT LIST

Ex. No.	Brief Description
2001	Order Denying Petition for Writ of Mandamus, No. 6:22-cv-00031-ADA, *Flypsi, Inc. v. Google LLC*, Case: 23-112, Federal Circuit, Document 19, March 6, 2023
2002	Order Denying Motion to Stay, Case Number: 6:22-cv-00031-ADA, *Flypsi, Inc. v. Google, LLC*, Western District of Texas, March 30, 2023
2003	Amended Scheduling Order, Case Number 6:22-cv-00031-ADA, *Flypsi, Inc. v. Google, LLC*, Western District of Texas, Document 112, April 21, 2023
2004	Lex Machina statistics Judge Alan D Albright of the U.S. District Court for the Western District of Texas. https://law.lexmachina.com/federal-court/district/judge/5198506/cases?pending-
2005	Declaration of Michael A. Bittner in Support of Motion for *Pro Hac Vice* Admission
2006	Declaration of William M. Logan in Support of Motion for *Pro Hac Vice* Admission
2007	Declaration of Matthew R. McCullough in Support of Motion for *Pro Hac Vice* Admission
2008	Demonstrative Exhibit Used at Deposition of Bill Lin, Ph.D.
2009	Deposition Transcript of Bill Lin, Ph.D.
2010	Declaration of Robert Akl, D.Sc.
2011	Curriculum Vitae of Robert Akl, D. Sc.

I. Introduction

The '554 patent describes a novel and non-obvious invention allowing users to have multiple phone numbers for a single phone, while preserving caller ID so that the user can, for example, use a secondary phone number as a business phone number and have that number accurately appear as the caller ID on outgoing calls. To accomplish this, the invention transmits information regarding access telephone numbers to the user's phone via a "data channel," to enable the user's handset to make outgoing calls with the desired caller ID by dialing the access telephone number.

Ground 1 of the Petition (upon which all other Grounds depend) argues that Backhaus anticipates this invention, but the Petition fails to meet the exacting standard required for anticipation: that a single prior art reference discloses "all elements of a claimed invention *arranged as in the claim*." *Connell v. Sears, Roebuck & Co.*, 722 F.2d 1542, 1548 (Fed. Cir. 1983) (emphasis added). Backhaus fails to meet this standard for at least three reasons.

First, Backhaus fails to disclose transmitting information indicating an access telephone number "via a data channel." The Petition is based on an improper claim construction of "channel" that the Board should reject. Moreover, neither of the Petition's two alternate theories show that the specific transmission occurs via a data channel. In the first theory, the Petition relies on information

transmitted as part of a call that is not on a data channel at all. The teachings that the Petition relies on relating to using IP are not related to a call and the flow path of the figures in Backhaus makes clear that those teachings cannot be reached in connection with an incoming call. In the second theory, the Petition relies on generic teachings that unspecified information may be transmitted via IP (an alleged data channel). But the Petition does not show that the specific information recited in the claim is transmitted via IP and thus fails to show anticipation.

Second, the Petition fails to show anticipation because it takes contradictory positions on whether substantially identical calls are received on a "data channel" or a "voice channel." These contradictions cannot be reconciled and thus the Petition has failed to identify any single consistent reading that would anticipate the claims.

Third, Backhaus fails to disclose that the same "switch" performs the steps recited in limitations [1.c], [1.d], [1.e], and [1.f], which require that the same "switch" receive or transmit certain information relating to a call. The Petition relies on inherency, but there are possible alternatives that either involve multiple switches or not using a switch for the second leg of the call. Thus, the use of a single switch to perform each of the recited limitations is not inherent and Backhaus does not anticipate.

Because Ground 1 fails, the Petition fails to show invalidity of any claim. The remaining grounds either expressly depend on Ground 1 or propose combinations that incorporate the deficiencies of Ground 1, confirming that all grounds fail.

Finally, the Board should disregard Petitioner's expert opinion. It is highly conclusory and virtually identical to the Petition. At deposition, the Petitioner's expert could not explain the basis for his opinion and repeatedly tried to evade answering questions about the basis of his opinions. This was especially true on questions related to the "channel" terms which were disputed in the Patent Owner's Preliminary Response and discussed in the Institution Decision. Despite there being clear notice of the relevance of these issues, Petitioner's expert was wholly unprepared to defend or explain his opinions relating to the "channel" terms (as well as a host of other issues), and the Board should therefore disregard his opinion. *See Xerox Corp. v. Bytemark, Inc.*, IPR2022-00624, Paper 9 at 15 (PTAB Aug. 24, 2022) (precedential) ("We have reviewed this excerpt from Dr. Jones' declaration and note that it merely repeats, verbatim, the conclusory assertion for which it is offered to support. … Thus, the cited declaration testimony is conclusory and unsupported, adds little to the conclusory assertion for which it is offered to support, and is entitled to little weight.").

II. Overview of the ’554 Patent

The ’554 patent describes systems and methods for “delivering telephone calls using the combination of a data channel and a voice channel.” Ex. 1001, Abstract. The invention of the ’554 patent “permit[s] the same handset to be associated with multiple secondary telephone numbers from which calls appear to have been made and to which calls appear to have been placed.” *Id.* The specification of the ’554 patent describes both incoming calls (calls from a third party to one of multiple telephone numbers associated with a handset) and outgoing calls (calls from one of the telephone numbers associated with a handset to a third party), but the focus of the ’554 patent claims is solely on outgoing calls.

The ’554 patent describes that a handset may be associated both with a “primary telephone number,” such as the one assigned at activation, and one or more “secondary telephone numbers.” *Id.*, 5:8-25. Additionally, the ’554 patent teaches the use of a “bridge telephone number.” *Id.*, 7:66-8:1. Information about the bridge telephone number is transmitted to the user’s handset via a “data channel.” *Id.*, 2:31-33, 7:64-65.

When the user places an outgoing call to a contact telephone number, an application on the handset causes the handset to call the bridge telephone number associated with the contact telephone number via a “voice channel.” *Id.*, 8:16-22. The “bridge telephone number may be associated with the switch 110, and calls to

the bridge telephone number may be automatically routed to this switch." *Id.*, 7:66-8:1. The switch then connects the call to an outgoing "voice channel call" to the contact telephone number, and can "cause[] the secondary telephone number to be displayed as the number from which the call appears to have been placed." *Id.*, 8:26-37.

The '554 patent contrasts the use of data channels, which can allow "communications between the server 100 and the handset 340 over the Internet 316," for example, using "IP as a protocol," with the use of voice channels, which allow communications "over the [Public Switched Telephone Network]" that may use "CDMA, GSM or like standards." *Id.*, 4:46-57. In the invention of the '554 patent, only certain functionality is performed via a data channel, such as transmitting the association of a bridge telephone number with each contact telephone number, while other functionality is performed via a voice channel, such as placing an outgoing call from the switch to the contact telephone number.

III. Level of Skill in the Art

For the purposes of this Response only, Patent Owner does not dispute the level of skill identified in the Petition (Petition at 4-5) because the prior art fails to invalidate under any possible level of skill.

IV. Claim Construction

The Petition does not propose construction of any term. Patent Owner proposes the following constructions.

A. "channel"

The Petition is based on a construction of "channel" that is both improper and inconsistent with the intrinsic evidence.[1] As such, Patent Owner proposes the Board construe "channel" as follows to rectify the error in the Petition:

Term	Proposed Construction
channel	A channel does not have to be fully connected on both ends or actually transmitting a particular type of information to qualify as a channel.

One of the features of the challenged claims is that particular information is transmitted via different channels. For example, in claim 1, information that

[1] Petitioner should not be permitted to raise "new claim construction issues that were not previously raised in its petition" (Trial Practice Guide at 45) including, but not limited to, offering support for the construction that Petitioner misleadingly attempted to hide in its claim analysis in violation of the Trial Practice Guide's instruction that "the petitioner must include a statement identifying a proposed construction" (*id.* at 44).

indicates a bridge or access telephone number is transmitted to the mobile device via a "data channel," whereas the switch receives an outgoing call "via a second channel." The specification also teaches and emphasizes the importance of using different channels, such as data and voice channels, in the invention:

> The present invention relates to systems and methods for setting up and connecting telephone calls, and delivering information related to such telephone calls using an Internet Protocol (IP) or other data channel while delivering the voice portion of the call in accordance with CDMA, GSM or like voice channel delivery standards.

Ex. 1001 at 1:27-32.

The Petition is based on the false dichotomy that a channel must actively be carrying voice data to qualify as a voice channel, or else it is a data channel. *See, e.g.*, Petition at 24 ("A POSITA would have understood that the encoded message … is automatically transmitted … via a data channel rather than a voice channel because Backhaus discloses that that a voice path is not connected until the subscriber answers the call."). Even though the claims of the '554 patent do not use the term "voice channel," the Petition is based on the improper assumption that voice and data channels are the only possible channels, and that anything that does not have a voice path connected is therefore a data channel. Petitioner's expert likewise confirmed that his opinions were based on the same misunderstanding,

although he could not identify any basis for it and instead kept repeating his opinion:

> Q. Your understanding that a voice path has to be connected in order for something to qualify as a voice channel, what is that based on?
> A. That is based on -- that is based on my understanding when I read these patents.
> Q. What specifically in the patents led you to that understanding?
> A. I, it is my opinion that a person of skill in the art would have understood when reading this patent that a channel, when carrying voice, is a voice channel.
> And when it is not carrying voice, it is carrying non-voice data, it would be a data channel.

Ex. 2009 at 75:10-18; *see also id.* at 53:8-10, 57:2-4.

The Board should therefore construe the term "channel" to confirm that whether something qualifies as a voice, data, or other channel does not depend on whether a voice path is connected or the channel is actually carrying voice (or any other type of) information. The Board need not define the full boundaries of the "channel" terms, it need only reject Petitioner's improper construction, which is sufficient to resolve the dispute between the parties. *See Nidec Motor Corp. v. Zhongshan Broad Ocean Motor Co.*, 868 F.3d 1013, 1017 (Fed. Cir. 2017) ("[W]e need only construe terms 'that are in controversy, and only to the extent necessary

to resolve the controversy.'" (quoting *Vivid Techs., Inc. v. Am. Sci. & Eng'g, Inc.*, 200 F.3d 795, 803 (Fed. Cir. 1999))).

This construction is consistent with the intrinsic evidence. Ex. 2010, ¶¶ 40-42. The patent repeatedly gives examples of protocols/standards that can be used as data or voice channels. For example, the patent describes "[t]he present invention" as involving both "an Internet Protocol (IP) or other data channel" and "CDMA, GSM or like voice channel delivery standards." Ex. 1001 at 1:24-29. The specification repeatedly describes IP as an exemplary data channel and CDMA, GSM, 3G, 4G, and/or LTE as exemplary voice channels. *Id.* at 1:56-59, 4:15-17, 4:44-55.

The specification never suggests that a voice path must actually be connected and transmitting voice (i.e., that a call must be answered and thus connected on both ends and actively transmitting voice) to qualify as a voice channel. Ex. 2010, ¶¶ 43, 48. To the contrary, the specification expressly teaches that call legs are made over a voice channel ***before*** they are connected on both ends, directly contradicting the Petition's construction. *Id.*, ¶ 44. Specifically, in describing an incoming call, the patent describes that if the user accepts the call, "the handset application may automatically cause the handset 340 to call the bridge telephone number in step 422 ***over a voice channel***." Ex. 1001 at 7:5-8. Then, the patent explains that once the call from handset is received at the switch, the switch

"may 'bridge' the incoming ***voice channel*** call to the bridge telephone number with the incoming ***voice channel*** call to the secondary telephone number to thereby connect the incoming call from the calling party to the handset 340 via a voice channel." *Id.* at 7:11-15. As this description makes clear, the patent expressly describes the two pending legs of the call as being "voice channel" calls ***before*** the calls are bridged together to actually connect both ends on a voice path. Ex. 2010, ¶¶ 44-45. Thus, the intrinsic evidence makes clear that channels are not defined by whether a voice path is connected or whether voice is actually being carried. *Id.*

The Petition does not cite to any intrinsic evidence in support of its construction. *See* Petition at 24-25. Petitioner's expert likewise failed to identify any support for this construction. Ex. 1002, ¶ 69. Dr. Lin also could not identify any basis for his opinion at deposition. Ex. 2009 at 75:4-76:3. The only time the Petition ever describes channels is in its Overview of the '554 Patent, where the Petition cites to the '554 patent's teaching that "[s]uch CDMA, GSM or like governed communications, when used to carry voice information, are referred to herein as being conducted over a 'voice channel.'" Ex. 1001 at 4:49-55 (cited in Petition at 6). To the extent Petitioner attempts to rely on the statement "when used to carry voice information," that does not support the Petition's construction because the specification is expressly clear that calls can occur over a "voice

channel" ***before*** a call is connected (and thus, before any voice is actually transmitted). *See id.* at 7:4-15. Any attempt to rely on the "when…" statement in isolation would violate settled law that "[i]n construing terms used in patent claims, it is necessary to consider the specification ***as a whole***, and to read all portions of the written description, if possible, in a manner that renders the patent internally consistent." *See Budde v. Harley-Davidson, Inc.*, 250 F.3d 1369, 1379-80 (Fed. Cir. 2001) (emphasis added).

A POSITA, reading the whole specification, would understand that this "when…" statement refers to the fact that different protocols can be used on top of one another and that a data protocol such as IP can be used to send information over GSM. Ex. 2010, ¶ 46 (Dr. Akl explaining a POSITA would be familiar with using multiple protocols on top of one another and would understand the specification to be referring to this concept). Thus, a POSITA would understand the "when used to carry voice information" qualifier not to impose a temporal limitation advocated by the Petition (and directly contradicted by a later example in the specification), but to refer to using combinations of different types of protocols on top of one another. *Id.* In such a case, a POSITA would look to the protocol that is set to be used to transmit information, not any underlying protocols used for bare transmission of across wires (or air waves). *See id.* (Dr. Akl

explaining a POSITA would look to the protocol set to be used to transmit information, not other protocols used merely for transport).

Indeed, although the Board should not consider extrinsic evidence because the intrinsic evidence resolves any dispute on this claim term,[2] Petitioner's own extrinsic evidence supports Patent Owner's construction. Petitioner's reference describing the SS7 protocol (Ex. 1011) teaches that SS7 can be transported over MTP protocols (as is conventional) or IP (in newer applications), but the reference refers to the transmission as SS7 regardless of the protocol used merely for transport (MTP vs. IP):

[2] *Vitronics Corp. v. Conceptronic, Inc.*, 90 F.3d 1576, 1583 (Fed. Cir. 1996) (it is "improper to rely on extrinsic evidence" when "an analysis of the intrinsic evidence alone will resolve any ambiguity").

Figure 4-18 *Introductory SS7 Protocol Stack*

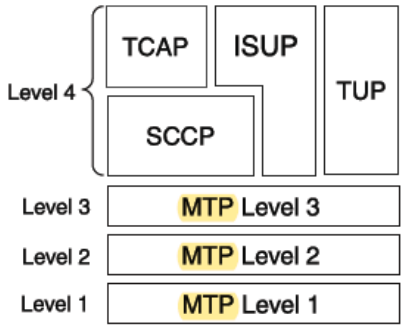

Such a stack uses TDM for transport. This book focuses on traditional SS7 because that is what is implemented. Newer implementations are beginning to appear that use different transport means such as IP and that have associated new protocols to deal with the revised transport.

The SS7 physical layer is called MTP level 1 (MTP1), the data link layer is called MTP level 2 (MTP2), and the network layer is called MTP level 3 (MTP3). Collectively they are called the *Message Transfer Part (MTP)*. The MTP protocol is SS7's native means of packet transport. In recent years there has been an interest in the facility to transport SS7 signaling over IP instead of using SS7's native MTP. This effort has largely been carried out by the Internet Engineering Task Force (IETF) SigTran (Signaling Transport) working group. The protocols derived by the SigTran working group so far are outside the scope of this introductory chapter on SS7. However, full details of SigTran can be found in Chapter 14, "SS7 in the Converged World."

Ex. 1011 at 83 (emphasis added); Ex. 2010, ¶¶ 47.

The Board should therefore construe "channel" to make clear that whether something qualifies as a voice, data, or other channel does not depend on whether a voice path is connected or the channel is actually carrying voice (or any other type of) data.

V. The Petition fails to establish the invalidity of any claim.

The Petition fails to establish the invalidity of any claim, for at least the reasons described below. Further, the Petitioner's expert declaration is highly

conclusory and substantially identical to the Petition's argument. It therefore fails to show invalidity for the same reasons, and the Board should also disregard this declaration because it is conclusory, internally contradictory, and the expert could not explain his opinions at deposition (*see infra* Section V.G).

A. Ground 1: Backhaus does not anticipate limitation [1.b]'s requirement to automatically transmit information "via a data channel."

Limitation [1.b] recites "automatically transmitting information that indicates an access telephone number to the mobile device via a data channel." As discussed above in the Overview of the '554 Patent (Section II), one of the salient features of the '554 patent invention is a precise arrangement in which certain transmissions occur "via a data channel," while other transmissions occur "via a second channel" (e.g., a voice channel). To show anticipation, the Petition must show that Backhaus discloses all limitations of the claim as "arranged as in the claim," i.e., that the specifically recited "information that indicates an access telephone number" is transmitted "via a data channel." *Connell*, 722 F.2d at 1548. The Petition has failed to make this showing, and thus Backhaus does not anticipate.

The Petition alleges this limitation is disclosed in two separate ways, each of which are addressed separately below.

1. The Petition's "first way" fails to anticipate because the caller ID field is part of a call, and thus not a "data channel" as properly construed.

The Petition alleges, under its first theory, that the information is transmitted via a data channel because the "calling party field of the call" may include the relationship number. Petition at 23 (quoting Ex. 1005, [0055]). But there is no teaching in Backhaus, and no argument in the Petition, that this "calling party field of the call" is a "data channel" or that it is any different from the call itself (e.g., a voice channel). A POSITA would be very familiar with the concept of caller ID and would not consider the caller ID field of a call to be delivered over a separate channel from the call itself. Ex. 2010, ¶¶ 59-60. To the contrary, a POSITA would understand that caller ID is delivered over the same voice channel as the call itself, whether that be the PSTN or a wireless voice channel such as GSM, LTE, 3G, or 4G. *Id.* (Dr. Akl explaining that caller ID was well known in the art and a POSITA would consider it to be delivered over same channel as the call, which may be PSTN or a wireless protocol such as 3G or 4G).

Further, the plain language used by Backhaus—"calling party field *of the call*"—confirms this field is part of the call itself. Ex. 1005, [0055] (emphasis added). The surrounding teachings in Backhaus further support that this "calling party field" is part of the call itself. Backhaus begins describing an incoming call scenario in paragraph 52, where the third party making the incoming call does not

yet have an assigned relationship number. *See id.*, [0052]. In paragraph 53, the relationship number is created. *Id.*, [0053]. Then, in paragraph 54, "SLS platform 115 places the call to the primary number … per its primary service provider 201." *Id.*, [0054]. Thus, a POSITA would clearly understand that the "calling party field of the call" in paragraph 55, which the Petition relies on, is part of the call itself. Ex. 2010, ¶ 59.

The Petition further alleges that "[a] POSITA would have understood that the encoded message … is automatically transmitted … via a data channel rather than a voice channel because Backhaus discloses that that [sic] a voice path is not connected until the subscriber answers the call." Petition at 24 (citing Ex. 1005, [0052], [0056]). As noted above, this argument is based on an improper and incorrect claim construction, and thus fails to show anticipation of the claims as properly construed.

Furthermore, a POSITA would understand that the voice calls, while ringing (i.e., before the recipient picks up and the call is connected), are still using a voice channel. Ex. 2010, ¶¶ 43, 45, 48 (Dr. Akl explaining that a conventional voice call is considered to use a voice channel even when ringing, before the voice path is connected). Petitioner's own expert would not even fully embrace the Petition's argument (despite the same argument being virtually copy-pasted in his declaration), refusing to characterize the ringing state as using a data channel and

instead claiming "[i]t is something before the call." Ex. 2009 at 50:12-57:5. But he refused to identify what "something" channel was used while ringing. *Id.* Petitioner's expert failure to explain the basis of his opinion confirms that there is no supporting factual basis for this opinion and the Board should therefore disregard it. Indeed, the Board should disregard the entire expert declaration because it is conclusory, internally contradictory, and Dr. Lin repeatedly could not explain the basis for his opinions at deposition, as explained further below in Section V.G.

The Petition proceeds to argue that "Backhaus discloses that communication protocols, including IP-based communications ('data channel'), may be used for establishing the relationship between various numbers and associated databases (as described above)." Petition at 24-25 (citing Ex. 1005, [0073]). But this argument is not enough for anticipation, which requires showing that the specific communication recited in the claim occurs via a data channel. The description in Backhaus [0073] does not describe any specific transmission of information.

Further, the description in Backhaus [0073] is expressly related to a path in Figure 4 starting with Figure 4D (Ex. 1005, [0071]), which is reached by following the "no" branch of block 432 of Figure 4C (*id.*), which is in turn reached from following the "no" branch of block 404 of Figure 4A (*id.*, [0069]). Block 404 of Figure 4A is determining whether a call is received from a third party. *Id.*, [0062].

Thus, the disclosure in paragraph 73, which can only be reached by following the "no" branch of block 404 of Figure 4A (meaning there is ***not*** an incoming call from a third party) is irrelevant to the Petition's first way (which expressly relies on an incoming call from a third party, *see* Petition at 23). A POSITA would understand these are different embodiments used in different processing paths. Ex. 2010, ¶¶ 63-69 (Dr. Akl describing the flow path of Figures 4A-4D and the different embodiments disclosed therein).

In fact, getting to the point in the path where Backhaus [0073] is discussed is only possible by following the "no" branch of block 404 (meaning there is no incoming call from a third party, Ex. 1005, [0062]) and the "no" branch of block 432 (meaning the communication is not a call to a relationship number, Ex. 1005, [0069]). Backhaus expressly describes this as the SLS platform "determin[ing] that the communication is a data communication over network 125 that originated from an SLS client of a subscriber TD." *Id.*, [0071]. Thus, the discussion of using IP-based communication in Backhaus [0073] (which relates to a data communication that has been determined is ***not*** an incoming call) is a different embodiment from the Petition's first way (which relies on an incoming call) and a POSITA would understand that it is not possible to get to the processing path described in [0073] as part of an incoming call from a third-party. Ex. 2010, ¶¶ 67-69 (Dr. Akl explaining the disclosure of paragraph [0073] is impossible to reach

for an incoming call from a third-party based on the flow path in Figures 4A-4D). These two separate embodiments cannot show anticipation.[3]

The Institution Decision found that the Petition's argument on this limitation was sufficient based on teachings in Backhaus [0072] and [0074]. Paper 9 at 17. As an initial matter, neither the Petition nor its expert rely on [0072] or [0074] in connection with the first way (*see* Petition at 23-25; Ex. 1002, ¶¶ 68-69), and as such the Board should not consider these paragraphs in connection with this argument. But even if the Board considers their disclosure, paragraphs [0072] and [0074] relate to the same flow path described above, which is impossible to reach in connection with an incoming call. Ex. 2010, ¶¶ 63-69 (Dr. Akl explaining paragraphs [0072] and [0074] are part of same flow as paragraph [0073] and equally impossible to reach for an incoming call from a third-party). Thus, paragraphs [0072] and [0074] are equally irrelevant to the Petition's first way and the Petition fails to show anticipation for the same reasons described above.

---

[3] Neither the Petition nor the Petitioner's expert rely on the "at once envisage" standard, meaning that the reliance on separate embodiments is fatal to the anticipation arguments presented in the Petition. *Kennametal, Inc. v. Ingersoll Cutting Tool Co.*, 780 F.3d 1376, 1381 (Fed. Cir. 2015).

2. The Petition's "first way" fails to anticipate even under the Petition's improper construction.

The Petition's "first way" also fails to anticipate—even under the Petition's improper construction—because, as explained above, the teaching about using an IP protocol in Backhaus [0072]-[0074] is impossible to reach in the flow path for an incoming call. A POSITA would understand these are separate embodiments. Ex. 2010, ¶¶ 67-69. The Petition therefore fails to show anticipation because it relies on two distinct embodiments and makes no argument under the "at once envisage" standard.

Further, even if the Board does not adopt Patent Owner's proposed construction, the Petition's "voice path" argument still fails because is not consistent with the claim language. The claim recites that information is transmitted via a "data channel." The Petition's argument, however, focuses on when a *voice path* for an incoming call is connected. The '554 patent concerns outgoing calls, and the claims therefore never require that an incoming call is ever connected via a voice path. Thus, the Petition's argument regarding the timing of an incoming *voice path* being connected is inconsistent with the claims by imposing a requirement relating to incoming calls that is not recited in any claim limitation of the '554 patent.

The Petition's argument also fails as a matter of common sense. It is true that, when making phone calls—including on conventional, landline phones—"a

voice path is not connected until the subscriber answers the call." Petition at 24. But the fact that the voice path is not connected until the call is answered does not mean that there is a separate "data channel" being used prior to the moment of connection. The Petition fails to justify this leap in logic or the introduction of a second channel not mentioned in Backhaus [0052]-[0056]. Nor does the Petition argue that the use of a data channel for this particular transmission is somehow inherent. The Petition merely offers an unsupported conclusion, which cannot meet Petitioner's burden of showing anticipation.

3. The Petition's "second way" fails to anticipate because the Petition fails to show the use of a "data channel" under any possible construction.

The Petition next argues, under its second theory for limitation [1.b], that the SLS platform then "returns the next available relationship number to TD 110." Petition at 25 (citing Ex. 1005, [0074]). The Petition does not ever appear to contend this *specific* transmission occurs "via a data channel." *See id.* The cited portion of Backhaus does not identify any specific channel as being used for this transmission. *See* Ex. 1005, [0074]. The Petition argues that "TD 110 may communicate with SLS platform 115 using various protocols/mechanisms" that allegedly include IP, cellular, Wi-Fi and other protocols. Petition at 25-26 (citing Ex. 1005, [0072]-[0073]). But the mere fact that Backhaus describes that unspecified communications can occur via various channels is not enough for

anticipation: Backhaus must teach the specific arrangement of the claims, in which specific transmissions occur via a "data channel" and other transmissions occur via a "second channel." Backhaus contains no such teaching, and thus fails to anticipate limitation [1.c]'s requirement that a specific transmission occur "via a data channel."

In the Institution Decision, the Board discussed paragraphs [0072]-[0074] of Backhaus. But even these paragraphs are insufficient to show anticipation. The fact that ***some*** transmissions may occur via IP does not mean that the relationship number specifically is transmitted via IP. A POSITA would understand Backhaus [0073] to be describing transmission of information generally, not that any one specific piece of information (much less the relationship number specifically). Ex. 2010, ¶ 72. A POSITA would understand that Backhaus' discussion of using IP could be referring to other information shared between the SLS platform and module. *Id.*

* * *

The Petition therefore fails to show that Backhaus anticipates limitation [1.c] under any construction and under any of the Petition's alternative theories, and thus Ground 1 fails to show anticipation of any claim.

B. Ground 1: The Petition fails to show anticipation because it takes internally contradictory positions on the "channel" limitations.

The Petition takes internally inconsistent positions on what qualifies as a "channel" and thus fails to show anticipation (regardless of how "channel" is construed).

For limitation [1.b], the Petition relies on a third-party calling an SLS subscriber. Petition at 20-21. The Petition relies on Backhaus' express teaching that "the SLS platform 115 may proceed to establish the second half of the call—the call from the SLS platform 115 to the subscriber's TD 110. The SLS platform 115 places the call to the primary number 1.408.544.1212 that points to subscriber TD 110 per its primary service provider 201." Ex. 1005, [0054] (quoted in Petition at 23). The Petition alleges that the "calling party field of the call placed from SLS platform 115 to subscriber TD 110" may include the relationship number. Petition at 23 (citing Ex. 1005, [0055]). The Petition contends that this call is received "via a data channel" because "a voice path is not connected until the subscriber answers the call." Petition at 24. Thus, for limitation [1.b], the Petition relies on (1) a call leg between the SLS platform and subscriber; (2) that has a calling party field; and (3) that has not yet been connected on both ends. Ex. 2010, ¶ 77. The Petition argues that these three factors mean the call is received via a data channel.

For limitation [1.d], however, the Petition makes a contradictory argument. For limitation [1.d], the Petition relies on a call from the subscriber to the

relationship number, which is routed to the SLS platform. Petition at 32-33 (citing Ex. 1005, [0049], [0059]). The Petition contends this call uses a voice channel "because calls are routed through network 125, where the disclosed switch establishes a voice channel ('second channel') through the disclosed PSTN in network 125, to facilitate voice communication in the connected call." Petition at 34-35. The Petition admits that this call has a "calling number," which the SLS platform recognizes and uses (in conjunction with the relationship number) to determine the correct contact number to create the second leg call to the contact. Petition at 36 (quoting Ex. 1005, [0060]). The Petition concedes that the call received from the subscriber is not connected until the SLS platform creates the second leg of the call and completes the call. Petition at 37-38. Thus, for limitation [1.d], the Petition relies on (1) a call leg between the SLS platform and subscriber; (2) that has a calling party field; and (3) that has not yet been connected on both ends (because at the moment it is received by the SLS platform, which is the moment relevant to limitation [1.d], the second leg has not even been created yet, so the call is not yet picked up by the contact being dialed). Ex. 2010, ¶ 82. The Petition argues that this call is received via a "second" channel, which the Petition identifies as a "voice channel." Petition at 34-35.

These two positions are inherently contradictory and cannot be reconciled. There is no relevant difference between these two call legs: (1) both are between

the SLS platform and subscriber; (2) both have a calling party field; and (3) both have not yet been connected on both ends (or, to use the phrasing of the Petition, a "voice path" has not yet been connected). The only difference is that the call leg relied on for limitation [1.b] is placed from the SLS platform to subscriber, whereas the call leg relied on for limitation [1.d] is placed in the other direction: from the subscriber to the SLS platform. But there is no reason why the direction of the call should matter in determining what "channel" is being used, and a POSITA would conclude that both calls would be received on the same channel. Ex. 2010, ¶ 84. The Petition certainly offers no justification for why a substantially identical call leg is allegedly received over a "data channel" in limitation [1.b] but somehow qualifies as a "voice channel" for limitation [1.d].

There is no dispute that the claimed "second channel" recited in [1.d] must be different from the "data channel" recited in [1.b]. Petitioner's expert expressly conceded this point:

> Q. Okay. And the second channel in the claims here has to be a different channel than the data channel mentioned earlier. Correct?
>
> A. Yes.

Ex. 2009 at 152:18-21. Thus, the call leg relied on for limitation [1.d] must be received on a different channel than the call leg relied on for limitation [1.b], but the Petition fails to identify any differences and instead asserts—in purely

conclusory fashion—that the virtually identical call legs are somehow received on different channels.

When Petitioner's expert Dr. Lin, whose analysis is a virtual copy-paste of the Petition (*see* Ex. 1002, ¶¶ 64-69, 75-77), was confronted with this contradiction (in the context of the related '585 patent challenged in Case No. IPR2023-00357, which has the same specification and for which Dr. Lin offered the same contradictory opinion), he could not identify any reason why the [1.b] call leg would be received on a data channel whereas the [1.d] call leg qualified as being received on a voice channel:

> Q. Sure. So, I'm asking about the two different calls you rely on. First in Paragraph 68, what you call the first way.
>
> And then the call from the subscriber's device to the relationship number that you are relying on for Limitation 1D.
>
> And, both of those calls are between a subscriber's terminal device and the SLS platform. They both have a calling party field. They are both received before the voice path is connected.
>
> So, why do you conclude that the call in Paragraph 68 is a voice -- or is a data channel but the call in Limitation 1D is a voice channel?
>
> THE WITNESS: So, going back to 1B, the limitation just requires transferring information that indicates an

> access telephone number to the mobile device by data channel.
>
> So, the first way that I explain is in that scenario, the SLS platform is, is providing information that are not just for that second half of the call.
>
> It is providing information about the relationship number and the actual number of the actual calling party.
>
> And so, that information, as I discussed, Backhaus teaches that it -- the IP can be used for that communication. And so that would be the channel.
>
> So, I think the issue is that Limitation 1B, I am showing how Backhaus describes how this information is sent over data channel. And this information is the specially encoded message.

Ex. 2009 at 182:6-183:20. This long, rambling answer does not identify a single relevant difference between the two scenarios. That Dr. Lin cannot explain why he reaches exactly opposite opinions for scenarios that are virtually identical confirms that his opinions, and the arguments of the Petition, are conclusory, inherently contradictory, and unreliable. The Board should therefore disregard Dr. Lin's conclusory expert testimony, as further described below. *See infra* Section V.G. Additionally, this contradiction means the Petition has failed to show anticipation because it fails to show the two different channels as required by the claims.

C. Ground 1: Backhaus does not anticipate the claim's requirement that the same "switch" perform limitations [1.c], [1.d], [1.e], and [1.f].

Limitations [1.c], [1.d], [1.e], and [1.f] recite as follows:

> [1.c] automatically associating the telephone access number with a switch associated with the server;
>
> [1.d] receiving, at the switch associated with the server, an outgoing call from the mobile device to the access telephone number via a second channel;
>
> [1.e] receiving, at the server, information from the switch indicating the outgoing call is being made to the access telephone number from the primary telephone number; and
>
> [1.f] receiving, at the switch, information from the server directing the switch to: (a) connect the outgoing call to a contact telephone number indicated by the mobile device, and (b) identify a telephone number from which the outgoing call is being made as the secondary telephone number.

Thus, each of limitations [1.d] through [1.f] requires the same "switch" to send or receive information related to the call. Limitation [1.c] introduces the switch using the phrase "a switch associated with the server." Limitations [1.d], [1.e], and [1.f] all refer to "the switch," which refers back to the same switch identified in limitation [1.c]. Thus, the same switch must be shown to meet the requirements of

limitations [1.c] through [1.f] in order to anticipate the claims. *Connell*, 722 F.2d at 1548.

The Petition does not contend that Backhaus discloses any switch, and it does not. Instead, the Petition relies on inherency, arguing: "[a] POSITA would have understood that network 125 necessarily includes the claimed 'switch,' such as the signal switching points (SSPs, which are knowns as 'switches' or 'exchanges') included in the disclosed PSTN." Petition at 28. But even if the Petition is correct that the network necessarily includes a switch, that would still be insufficient to prove anticipation. Inherency requires that the prior art "necessarily functions in accordance with, or includes, the claimed limitations." *MEHL/Biophile Int'l Corp. v. Milgraum*, 192 F.3d 1362, 1365 (Fed. Cir. 1999). Inherency "may not be established by probabilities or possibilities. The mere fact that a certain thing *may* result from a given set of circumstances is not sufficient." *Id.* (original emphasis) (quoting *In re Oelrich*, 666 F.2d 578, 581 (C.C.P.A. 1981)).

Here, the Petition's inherency argument fails because using the same switch to perform all three limitations is merely a possibility or a probability. The Petition never provides a single reason why it would be necessary to use the same switch. It is not *necessary*, and therefore it is not inherent. Indeed, at least one alternative possible arrangement is readily apparent: using two different switches and bridging the call on Backhaus' SLS platform server. Ex. 2010, ¶¶ 89-92.

Specifically, in Backhaus, a call could be received at a first switch (as the Petition alleges in relation to limitation [1.d]), but the Backhaus server could direct a *different* switch to connect the outgoing call (conflicting with limitation [1.f]). The calls could then be bridged on the server itself, not at a single switch. This is consistent with Backhaus' express teachings that "the SLS platform 115"—not any switch—"connects the two legs of the call" and that calls can be connected "via a forward or a bridge, as well as other technologies." Ex. 1005, [0056]. A POSITA would understand that such multi-switch arrangements were not only possible but would be beneficial in some circumstances. Ex. 2010, ¶¶ 90-91 (Dr. Akl explaining that the use of multiple switches is possible and may be beneficial in some circumstances, such as for load balancing).

Thus, the use of a single switch for limitations [1.c] through [1.f] is not inherent because there was at least one available alternative design, which confirms the Petition cannot show inherency. *See, e.g.*, *PersonalWeb Techs., LLC v. Apple, Inc.*, 917 F.3d 1376, 1382 (Fed. Cir. 2019) (overturning the Board's inherency finding where there was "an equally plausible, if not more plausible, understanding" of the prior art, such that it did not necessarily disclose the claim limitation).

The Petition's own argument further confirms its failure to prove inherency. For example, the Petition identifies multiple switches in the PSTN, including at

least "a calling party's local switch and a destination's local switch." Petition at 29. The Petition further relies on the Taylor reference, *a completely separate reference from Backhaus*, which depicts a network with at least five switches, as highlighted in yellow below:

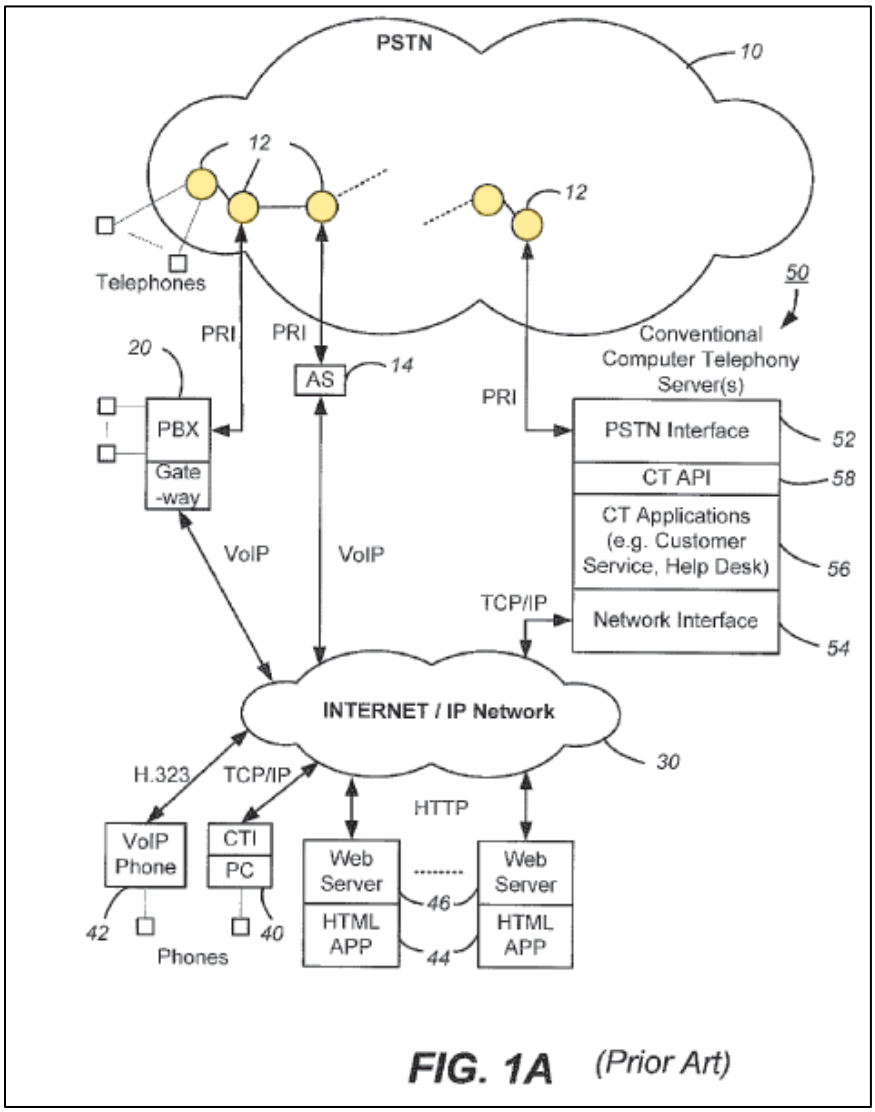

FIG. 1A (Prior Art)

Ex. 1007, Fig. 1A. The Petition offers no reason why Backhaus must necessarily use any of the teachings of Taylor and furthermore fails to demonstrate that either Backhaus or Taylor teach that it is necessary to use the same switch. To the

contrary, as shown in Figure 1A of Taylor, the prior art makes clear that there are multiple switches in the network that may be used in connection with a call. A POSITA would understand that multiple different switches in Taylor could be used for different legs of a call. Ex. 2010, ¶ 94.

Finally, the Petition attempts to rely on alleged admissions that switches were well-known. *E.g.*, Petition at 29 & n.7. But even if switches were well-known generally, that does not mean that the specific architecture of the claims—i.e., a single switch for performing the functions recited in each of limitations [1.c] through [1.f]—was well known. The Petition does not identify any admission as to this specific architecture. Mere general admissions that switches were known is insufficient to prove anticipation because they do not show all the claim elements in a "single prior art reference" as required for anticipation. *See Structural Rubber Prods. Co. v. Park Rubber Co.*, 749 F.2d 707, 716 (Fed. Cir. 1984) (for anticipation, rejecting argument that "missing elements may be supplied by the knowledge of one skilled in the art").

The Institution Decision concluded that the Petition's discussion of "local switches" was sufficient to meet this limitation. Specifically, the Board stated that "Petitioner presents evidence that each telecommunication device or server necessarily accesses a PSTN using its own local switch." Paper 9 at 19. But none of the evidence cited by the Board requires that there must be an ***exclusive***

relationship with a single switch. The cited analysis from Petitioner's expert testimony merely states that a local switch is used, but does not allege, much less provide any evidence, that a must necessarily be connected to one and only one local switch. *See* Ex. 1002, ¶ 73. The documentary evidence likewise merely discusses local switches, but never establishes that an exclusive relationship with a single switch is inherent. *See* Ex. 1007, Fig. 1A; Ex. 1011 at 6-7.

In all its discussion of "local switches," the Petition never alleges, nor provides any evidence, that an endpoint may only have one local switch and that all calls are necessarily routed through that switch. A POSITA would understand that an endpoint such as a sever could be connected to multiple local switches. Ex. 2010, ¶ 93. Indeed, a POSITA would understand the concept of a "local" switch is not some fixed, pre-defined exclusive relationship, but merely refers to which switch is being used for a particular call. *Id.* Because it is possible to use multiple local switches, the claim limitations are not inherent.

The Petition therefore fails to show that Backhaus anticipates limitations [1.c], [1.d], [1.e], and [1.f], and thus Ground 1 fails to show anticipation of any claim.

D. Ground 1: Backhaus does not anticipate claims 2 or 4.

Claims 2 and 4 depend on claim 1 and thus incorporate all of claim 1's requirements. Because Backhaus does not anticipate claim 1, it cannot anticipate claims 2 or 4.

E. Ground 2 fails for the same reasons as Ground 1.

Ground 2 relates solely to claim 3, which ultimately depends from claim 1 and incorporates all of its requirements. *See* Petition at 43-47. The Petition does not allege that any disclosure in Saksena is relevant to claim 1. *Id.* Nor does the Petition contend or argue that any aspect of claim 1 would be obvious based on Backhaus in combination with Saksena. *Id.* Thus, Ground 2 incorporates all the flaws of Ground 1 and fails for the same reasons that Backhaus fails to anticipate claim 1.

F. Grounds 3-4 fail for the same reasons as Ground 1.

For Grounds 3 and 4, the Petition relies on Taylor in relation to the "switch" recited in limitations [1.c] through [1.f]. *See* Petition at 47-51.

1. Grounds 3-4 fail to render obvious [1.b] and rely on the same inconsistent position as Ground 1 regarding the "channel" terms.

The Petition does not contend that any disclosure in Taylor is relevant to limitation [1.b] or the "channel" terms in claim 1. *Id.* Nor does the Petition argue that any aspect of limitation [1.b] or the "channel" terms in claim 1 would be obvious based on Backhaus in combination with Taylor (with or without Saksena).

Id. Thus, Grounds 3 and 4 incorporate the same flaws of Ground 1 with respect to limitation [1.b] and the "channel" terms in claim 1 and fail for the same reason that Backhaus fails to anticipate this limitation of claim 1.

2. Grounds 3-4 fail to render obvious the use of a single "switch" for limitations [1.c], [1.d], [1.e], and [1.f].

The Petition argues it would be obvious to "include a PSTN interface similar to that discussed in Taylor when implementing Backhaus' telephony service system." Petition at 49-50. But the PSTN interface is not a switch. Taylor clearly and unambiguously identifies a different element (Below highlighted circles numbered 12) as the "switches":

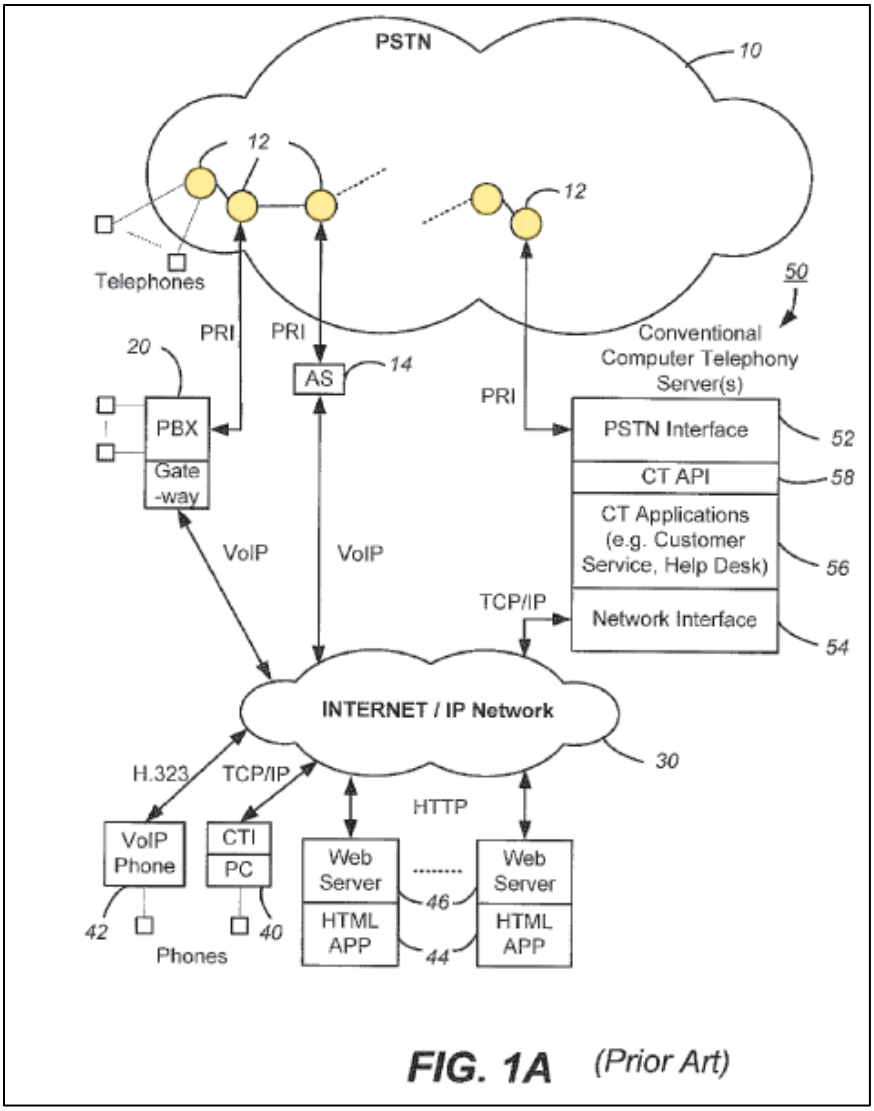

FIG. 1A (Prior Art)

Ex. 1007, Fig. 1A, [0004] (identifying "switches 12"); *c.f.* [0008] (describing "PSTN interface 52" as an interface of "CT server 50").

A POSITA would thus understand the proposed combination does not involve a switch at all and thus does not render obvious limitations [1.c], [1.d], [1.e], or [1.f], each of which recite a "switch." Ex. 2010, ¶¶ 98-99 (Dr. Akl explaining that a POSITA would understand Taylor's PSTN interface to not constitute a "switch" as claimed). Indeed, the Petition implicitly concedes this by

stating that "PSTN interface 52 disclosed in Taylor is ***similar to*** the switch described in the '094 Patent's examples." Petition at 49. But similarity is not enough. The claims recite a "switch" and thus the Petition must show it is obvious to perform the limitations on a "switch" not merely on some device similar to a switch.

Even if this PSTN interface is considered to be a switch (despite there being no evidence in the record that it actually is a switch), Taylor fails to teach one single "switch" performing limitations [1.c], [1.d], [1.e], and [1.f] and, thus, the combination of Backhaus and Taylor would not have rendered claim 1 obvious. In particular, Taylor expressly depicts that a network consists of multiple switches, such as the five shown in Figure 1A above. The Petition does not even attempt to show that it would have been obvious to use the same switch for the functionalities listed in limitations [1.c], [1.d], [1.e], and [1.f]. Instead, the Petition merely alleges that "a POSITA would have been motivated to connect SLS platform 115 with the PSTN and to also include a PSTN interface." Petition at 50. The Petition also relies, in part, on alleged admissions that switches were well-known generally. *Id.* at 49. But merely including a "PSTN" or generally well-known switches does not render obvious the specific architecture of the claims, which require using the same switch for the specific functionality recited in limitations [1.c], [1.d], [1.e], and [1.f]. As explained above, other architectures were possible, including using

different switches, and those alternatives had advantages such as load balancing. Ex. 2010, ¶ 100. The Petition offers no reason why the specific architecture of the claims would be obvious and there is none.

Finally, the Petition fails to offer any reason why a POSITA would use Taylor's PSTN interface when Backhaus already interfaces with the PSTN on its own. Backhaus expressly states that it can direct calls "via the PSTN." *E.g.*, Ex. 1005, [0136]. In light of this, a POSITA would understand that Backhaus already has its own mechanism for interfacing with the PSTN. Ex. 2010, ¶ 101 (Dr. Akl explaining a POSITA would understand Backhaus has its own interface to the PSTN). The Petition offers no reason for replacing Backhaus' PSTN interface with that of Taylor and thus fails to justify its proposed combination.

Thus, Grounds 3 and 4 fail for the same reasons that Backhaus fails to anticipate claim 1.

G. The Petition's conclusory expert declaration should be disregarded.

The expert declaration submitted with the Petition is virtually identical to the Petition, highly conclusory, internally contradictory, and the expert could not explain his opinions at deposition. The Board should therefore disregard this conclusory opinion. *See Xerox Corp. v. Bytemark, Inc.*, IPR2022-00624, Paper 9 at 15 (PTAB Aug. 24, 2022) (precedential) ("We have reviewed this excerpt from Dr. Jones' declaration and note that it merely repeats, verbatim, the conclusory

assertion for which it is offered to support. … Thus, the cited declaration testimony is conclusory and unsupported, adds little to the conclusory assertion for which it is offered to support, and is entitled to little weight.”).

The declaration does not contain any statement of the legal standards the expert understood or was applying, such as standards relating to defining the person of ordinary skill in the art, anticipation, or obviousness. The expert could not identify a single standard that he applied in his analysis, and worse, Petitioner’s counsel gave plainly improper privilege cautions in an apparent attempt to hide whatever standards the expert was given and applied in his declaration:

> Q. Were you given any legal standards that you considered or applied in your analysis?
>
> MR. HERR: I would like to launch a little caution here. I caution the witness not to answer the question to the extent that the answer would reveal any attorney/client privileged communications.
>
> Otherwise you may answer.
>
> THE WITNESS: So, my declaration is my analysis how the prior art discloses certain teachings.

Ex. 2009 at 9:1-11; *see also id.* at 14:5-17:6 (Dr. Lin repeatedly failing to answer whether he relied on any standards given by Petitioner’s counsel in performing his analysis and Petitioner’s counsel repeatedly cautioning the witness under privilege grounds). Petitioner’s counsel conceded that instructions from counsel “regarding

the standards for invalidity that he relied on in his declaration" are not privileged (*id.* at 23:6-11), but repeatedly gave improper cautions to questions that were expressly limited to asking about instructions from Petitioner's counsel that he relied on. After extensive questioning, the witness resorted to claiming he could not recall whether Petitioner gave him instructions on any legal principle. *Id.* at 25:3-10 (re defining level of skill), 26:9-22 (re applying level of skill), 33:11-34:1 (re anticipation), and 34:3-11 (re obviousness). Thus, the standards that formed the basis of Dr. Lin's opinion are a complete mystery, rendering his declaration conclusory and unreliable. When combined with the near-identical nature of the Petition and the declaration, and Petitioner's counsel's improper privilege cautions, this strongly suggests that the Petition is nothing more than an attempt by Petitioner to give its counsel's legal argument the veneer of expert opinion so that they can qualify as factual evidence rather than unsupported argument. The Board should not endorse such sleight of hand and should instead disregard the declaration entirely.

Furthermore, the declaration fails to explain critical points and contains contradictory positions. As noted above, the declaration fails to contain any explanation of the basis for the opinion that a "voice path" must be connected or else the communication is using a data channel. Ex. 1002, ¶ 69; Ex. 2009 at 75:4-76:3 (Dr. Lin failing to identify any basis and simply restating his conclusory

opinion). Worse, Dr. Lin directly contradicts himself by later arguing that a virtually identical call leg is made over a voice channel. *See supra* Section V.B. Dr. Lin could not identify any material difference between these two call legs that justified him reaching diametrically opposed conclusions. *See id.* This inability to explain his opinions confirms that there is no basis for his conclusory opinion and the Board should simply disregard Dr. Lin's declaration.

Dr. Lin also repeatedly could not answer whether a call is using a voice channel when the phone is ringing before it is picked up. Instead, he tried to redirect to his opinions about Backhaus:[4]

> Q. In a conventional landline to landline call, would a person of ordinary skill in the art consider the call to be using a voice channel when it is ringing before the call has been picked up or answered?
>
> THE WITNESS: Yeah, so I think the teaching that I have applied doesn't bring that into question.

---

[4] Although some of the deposition testimony cited in this section references the '585 patent (which is challenged in Case No. IPR2023-00357), the '554 patent is related to the '585 patent and shares the same specification. Additionally, Dr. Lin offered substantially similar, if not identical, invalidity opinions for both patents, confirming this testimony remains relevant to this proceeding.

> Again, my analysis of Limitation 1B, for example in the '585, I describe how information that is sent before the voice path is connected, Backhaus teaches that to be sent over a data channel.

Ex. 2009 at 54:3-16; *see also id.* at 50:9-54:2, 54:17-57:5 (repeatedly declining to answer this question). But the understanding of a POSITA is a critical issue in this proceeding, particularly when Dr. Lin offers opinions based on a supposed understanding of a POSITA that depends on whether a voice path is connected. Dr. Lin's inability to answer questions about how a POSITA would understand the concept of a channel in the context of a conventional phone call confirms that he cannot explain the basis for his conclusory opinions (or worse, that these conclusory opinions are not based on expert technical knowledge but instead based on hindsight and using the claims to identify whatever Petitioner needs to show invalidity). The Board should disregard this declaration.

Dr. Lin also refused to answer questions about whether conventional caller ID is transmitted over a voice channel or data channel:

> Q. I am asking about call routing as is known in the art. Not specific to Backhaus's SLS platform, but just a general phone call.
>
> When the CLID is transmitted, is that using a voice channel or a data channel or something else?

> THE WITNESS: So, again, in my analysis of 1B, I explain how Backhaus teaches that limitation or discloses that limitation.
>
> And I would be happy to describe my opinion there.

Ex. 2009 at 60:6-19. He further claimed he could not answer the question because he has "not performed that analysis." *Id.* at 63:10-21. But Dr. Lin should have analyzed the difference between a voice and data channel ***before*** offering the opinion that a channel was defined in a particular way. And of course, considering conventional technology in the field is part of what a POSITA would do. That Dr. Lin failed to do so confirms that he did not apply the correct legal standards and simply signed on to conclusory opinions that lacked support.

Dr. Lin also repeatedly refused to answer questions about whether calls were using a voice channel at the moment they were received by the platform in Backhaus. *See* Ex. 2009 at 67:3-73:19. Instead, he tried to deflect by answering about ***different*** time periods:

> Q. I'm not talking about things that can happen after the call is received. Just at the one moment where the call is very first received by the SLS platform, at that moment, is it being received on a voice channel?
>
> THE WITNESS: So again, the call itself, I think the call itself, there is certainly, ***once the voice path is established*** is certainly over the voice channel.

> But in the setup of that call and so forth, I think the information being exchanged is not voice.

Ex. 2009 at 73:20-74:12 (emphasis added). Limitation [1.d] requires receiving at a switch a call "via a second channel." Thus, Dr. Lin was required to consider whether the call being received at the platform was on a second channel (voice channel) ***before*** the call was actually connected. That he refused to answer this question and tried to instead talk about the different time period "once the voice path is established" confirms that he could not defend or support his opinions regarding the "channel" term.

Dr. Lin similarly refused to answer questions about whether calls described in the specification were made over a voice channel at a particular moment in time. The specification teaches the "the handset application may automatically cause the handset 340 to call the bridge telephone number in step 422 over a voice channel." Ex. 1001, 7:6-9. The '554 patent is unambiguous that the voice path between the two ends of the call is not connected until later step 424 where the two call legs are bridged. *Id.*, 7:13-17. Despite this clear teaching, Dr. Lin repeatedly refused to confirm the call was made before the voice path was connected. *See* Ex. 2009 at 81:14-93:22. Instead, he contorted the teaching of the patent, claiming that the plain language "over a voice channel" actually meant over something "that can act as a voice channel":

> Q. And that call in step 422 is before the voice path is connected by bridging the two calls in step 424. Correct?
> A. Well, I think when it says over a channel, over a voice channel, I think it is talking about making a call over something that, that can act as a voice channel.

Id. at 87:14-20. He then ultimately claimed that in this call "the voice channel becomes active when the calls, when the call is fully established." *Id.* at 92:4-18. He also claimed that voice channels can be "there" without carrying voice (contradicting the opinion that it is not a voice channel before the "voice path" is connected on both ends):

> Q. And when you say when the call is fully established, you are talking about when the two legs are bridged in step 424, correct?
> A. So, I think the voice channels are still there. The voice channel is still there. They are just not yet acting. They are just not yet carrying voice. They are just not acting as voice channels.

Ex. 2009 at 92:20-93:5. Dr. Lin then refused to identify the specific step number (of this example in the patent specification) where the handset began using a voice channel (*id.* at 97:18-104:10) until finally admitting that in his opinion, the voice channel was not used until step 424 (*id.* at 104:12-107:1). This directly contradicts the specification, which teaches that earlier step 422 is a call "over a voice

channel" (Ex. 1001, 7:6-17). Dr. Lin's opinions are thus inconsistent with the patent, perhaps because he was never instructed to apply the ordinary meaning in light of the specification. *See, e.g.*, *Phillips v. AWH Corp.*, 415 F.3d 1303, 1315 (Fed. Cir. 2005) ("claims 'must be read in view of the specification, of which they are a part'").

Dr. Lin's opinions about the "channel" term are also inconsistent with the patent in another way. When asked about an express statement in the specification identifying exemplary voice channels, Dr. Lin disagreed that those examples were voice channels:

> Q. Okay. Turn to the '585 patent, which is, for the record, that is Exhibit 1001 in Petition Number 357.
>
> …
>
> Q. Column 1, Lines 62 to 64.
>
> …
>
> Q. Yes. Okay. And here the patent references, "Using a voice channel provided in accordance with a voice channel protocol, e.g., in accordance with CDMA or GSM, 3G, 4G, LTE or like future protocol channel standards."
>
> Do you see that?
>
> A. Yes.
>
> Q. And so you agree that in the context of the patents, CDMA, GSM, 3G, 4G, and LTE are all examples of voice channels. Correct?

> A. I don't think a person of ordinary skill in the art reading this would make that conclusion.

Ex. 2009 at 76:4-77:9. Dr. Lin's admission that his opinions are inconsistent with the patent's teaching confirms that his opinions are unreliable and should be stricken.

In sum, Dr. Lin's opinions, particularly relating to the disputed "channel" terms, are highly conclusory and he could not explain the basis of these opinions at his deposition. His declaration is a virtual copy of the Petition and does not provide a sufficient explanation of the basis of his opinions. Thus, "the cited declaration testimony is conclusory and unsupported, adds little to the conclusory assertion for which it is offered to support, and is entitled to little weight." *Xerox*, IPR2022-00624, Paper 9 at 15. The Board should therefore disregard Dr. Lin's declaration in its entirety.

VI. Conclusion

For at least the foregoing reasons, the Petition has failed to show that any claim is invalid, and the Board should issue a Final Written Decision finding that no claim has been shown invalid.

Dated: October 26, 2023

/s/Louis L. Campbell
Louis L. Campbell (Reg. No. 59,963)
WINSTON & STRAWN LLP
255 Shoreline Dr., Ste. 520

Redwood City, CA 94065
llcampbell@winston.com
T: 650.858.6500, F: 650.858.6550

Lead Counsel for Patent Owner
Flypsi, Inc. (d/b/a Flyp)

CERTIFICATE OF COMPLIANCE

This patent owner response complies with the word count limits set forth in 37 C.F.R. § 42.24(a)(1)(i) & (b)(2), because this patent owner response contains 10,213 words, excluding the parts of the patent owner response exempted by 37 C.F.R. § 42.24(a)(1) and determined using the word count provided by Microsoft Word, which was used to prepare this patent owner response.

Dated: October 26, 2023

/s/Louis L. Campbell
Louis L. Campbell (Reg. No. 59,963)
WINSTON & STRAWN LLP
255 Shoreline Dr., Ste. 520
Redwood City, CA 94065
llcampbell@winston.com
T: 650.858.6500, F: 650.858.6550

Lead Counsel for Patent Owner
Flypsi, Inc. (d/b/a Flyp)

CERTIFICATE OF SERVICE

The undersigned hereby certifies that the foregoing PATENT OWNER FLYPSI, INC.'S PATENT OWNER RESPONSE and Exhibits 2008-2011 were served electronically via email on October 26, 2023, in their entirety on the following counsel of record:

Naveen Modi (Reg. # 46,224)
Joseph E. Palys (Reg. # 46,508)
Daniel Zeilberger (Reg. # 65,349)
Howard Herr (*pro hac vice approved*)
Puja Patel (*pro hac vice approved*)
PAUL HASTINGS LLP
2050 M St NW,
Washington, D.C. 20036
Telephone: (202) 551-1700
Fax: (202) 551-1705
PH-Google-Flypsi-IPR@paulhastings.com
naveenmodi@paulhastings.com
josephpalys@paulhastings.com
danielzeilberger@paulhastings.com
howardherr@paulhastings.com
pujapatel@paulhastings.com

Dated: October 26, 2023

/s/Louis L. Campbell
Louis L. Campbell (Reg. No. 59,963)
WINSTON & STRAWN LLP
255 Shoreline Dr., Ste. 520
Redwood City, CA 94065
llcampbell@winston.com
T: 650.858.6500, F: 650.858.6550

Lead Counsel for Patent Owner Flypsi, Inc. (d/b/a Flyp)