US 20050124209A1

(19) United States

(12) Patent Application Publication

(10) Pub. No.: US 2005/0124209 A1

(43) Pub. Date: Jun. 9, 2005

Currie et al.

(54) ILLUMINATED ELECTRICAL CORDS AND OUTLETS

(76) Inventors: **Robert M. Currie**, Dollard-Des-Ormeaux (CA); **Jonas J. Robertson**, Harvey, LA (US)

Correspondence Address:
Merek, Blackmon & Voorhees, LLC
673 S. Washington St.
Alexandria, VA 22314 (US)

(21) Appl. No.: **10/948,186**

(22) Filed: **Sep. 24, 2004**

Related U.S. Application Data

(63) Continuation of application No. 10/076,618, filed on Feb. 19, 2002, now Pat. No. 6,660,753, which is a continuation-in-part of application No. PCT/US00/22618, filed on Aug. 18, 2000.

(60) Provisional application No. 60/149,464, filed on Aug. 19, 1999. Provisional application No. 60/269,847, filed on Feb. 21, 2001.

Publication Classification

(51) Int. Cl.[7] H01R 3/00

(52) U.S. Cl. 439/490

(57) **ABSTRACT**

A number of different embodiments of illuminated electrical cords and outlets are provided. Some embodiments include a light source within at least one connector end of an electrical cord, with the cord having a translucent outer cover for emitting the light radially from the connector end light source. The cord may be a household electrical or extension cord, a computer power supply cord, auxiliary power cord, etc., as desired. A kit may be provided to adapt a conventional, non-illuminated cord to provide illumination therefrom. Other embodiments include electrical outlets, adapters, and power strips having a light source(s) therein, for illuminating an electrical cord installed in the electrical power source. The outlets, adapters, and power strips may include differently colored lighting, and/or multiple colored lenses for manual or automated selection of color output. Battery power may be provided, with automated switching in the event of a primary power failure.

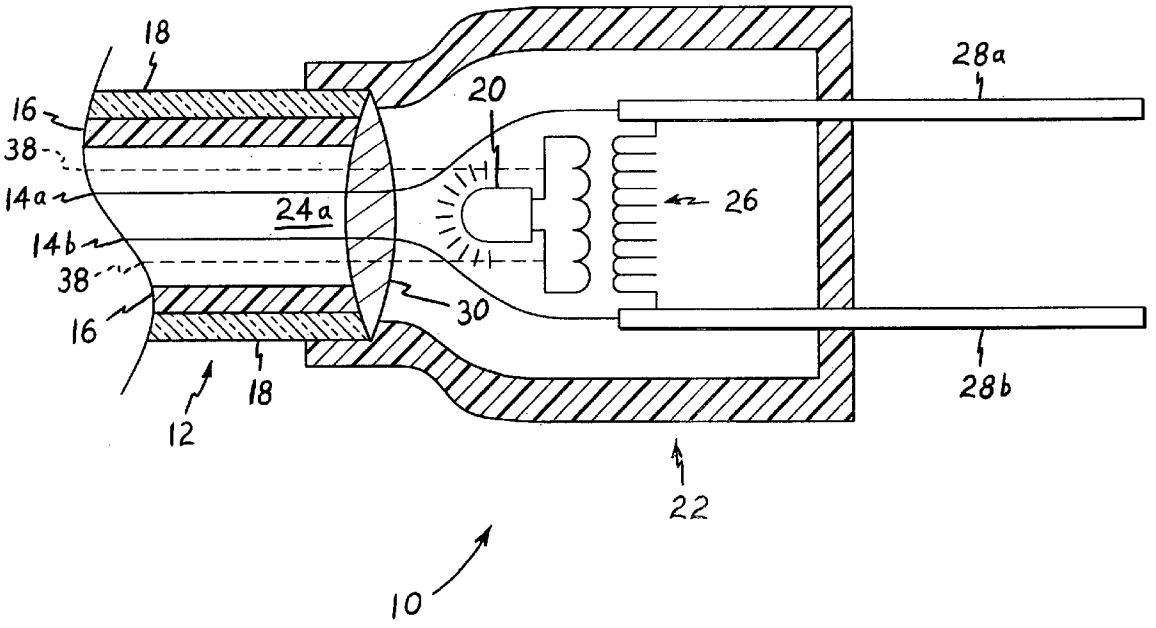

AMAZON.COM, INC. ET AL.
EXHIBIT 1012

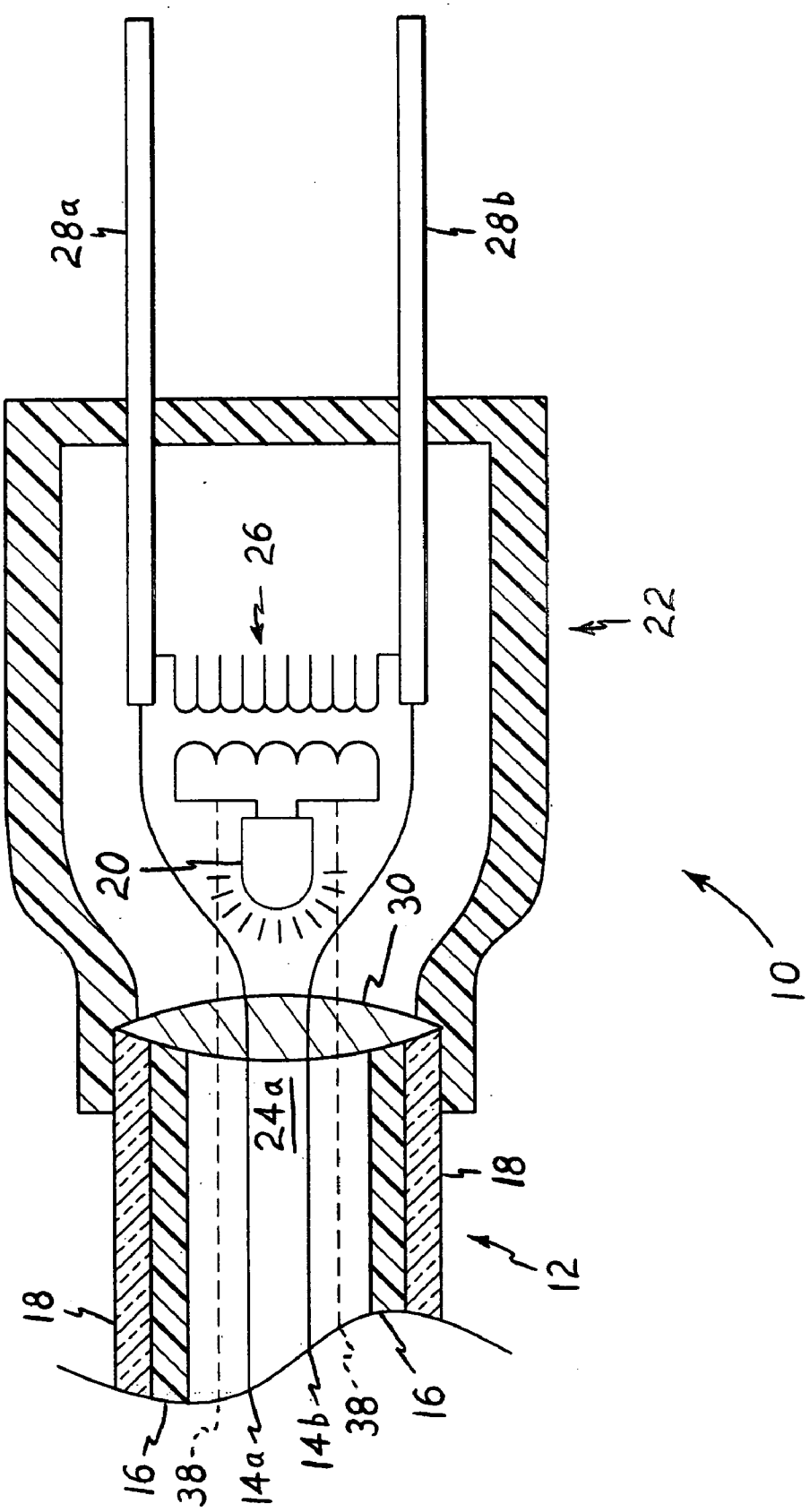

Fig. 1A

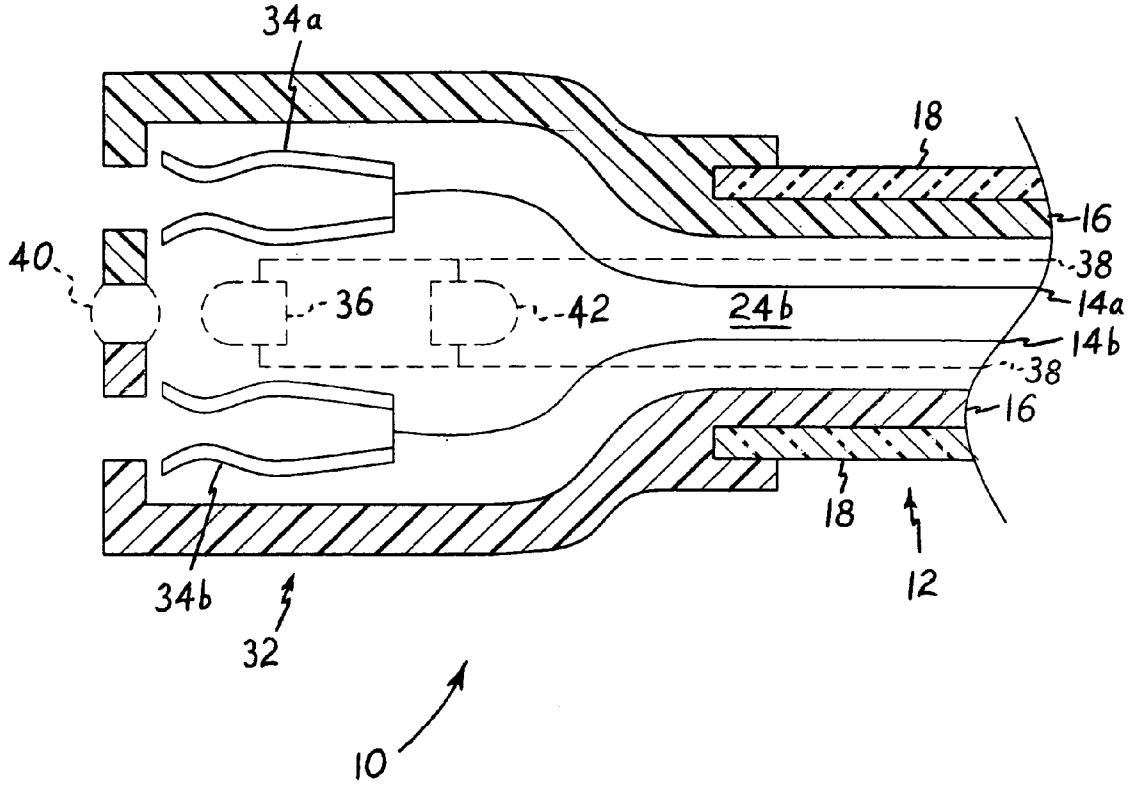

Fig. 1B

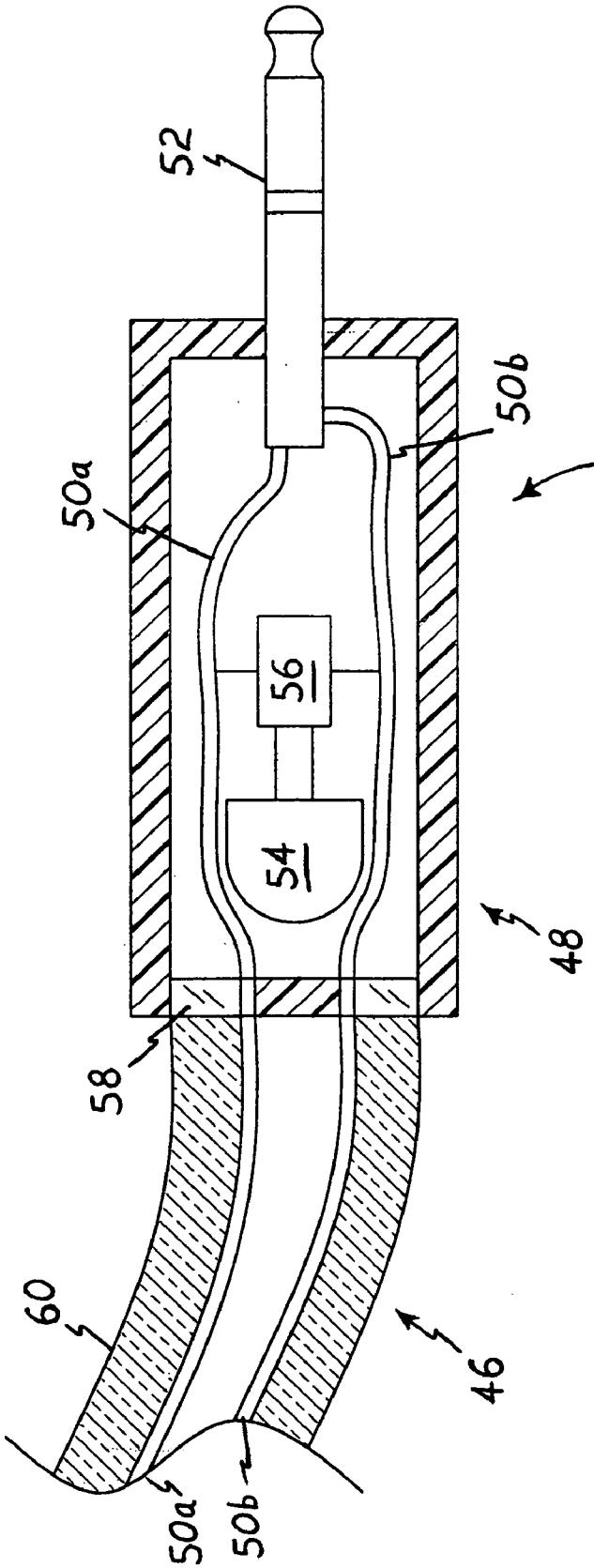

Fig. 1C

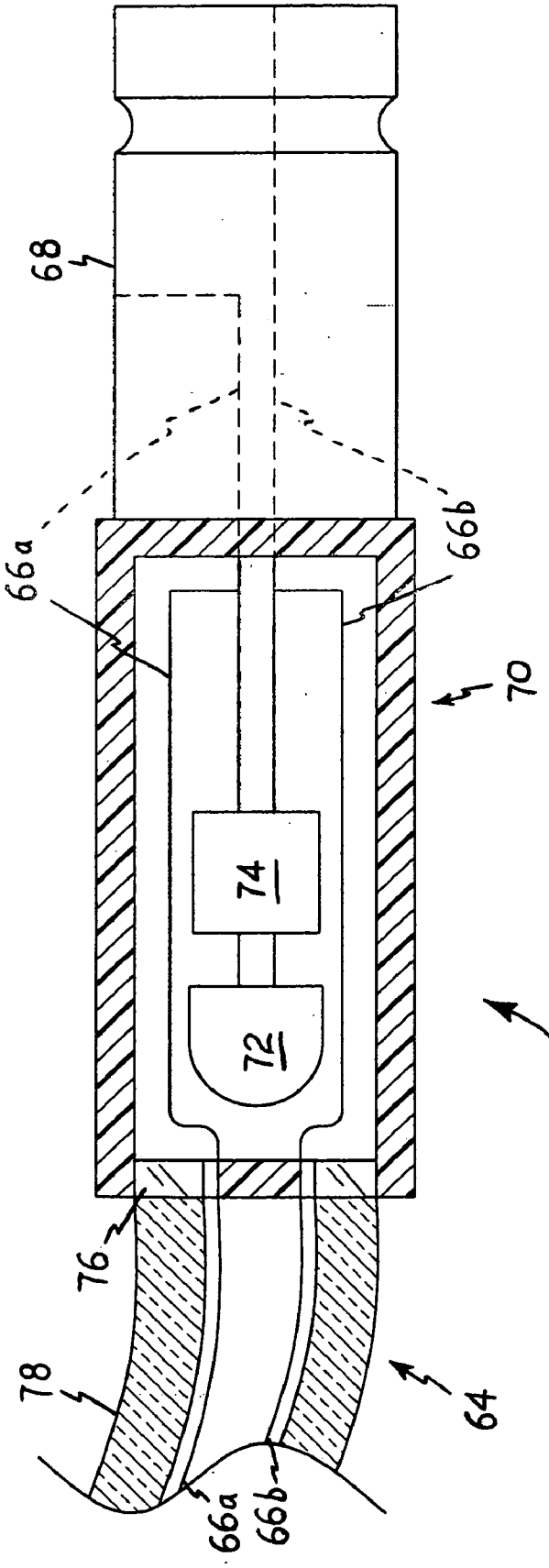

Fig. 1D

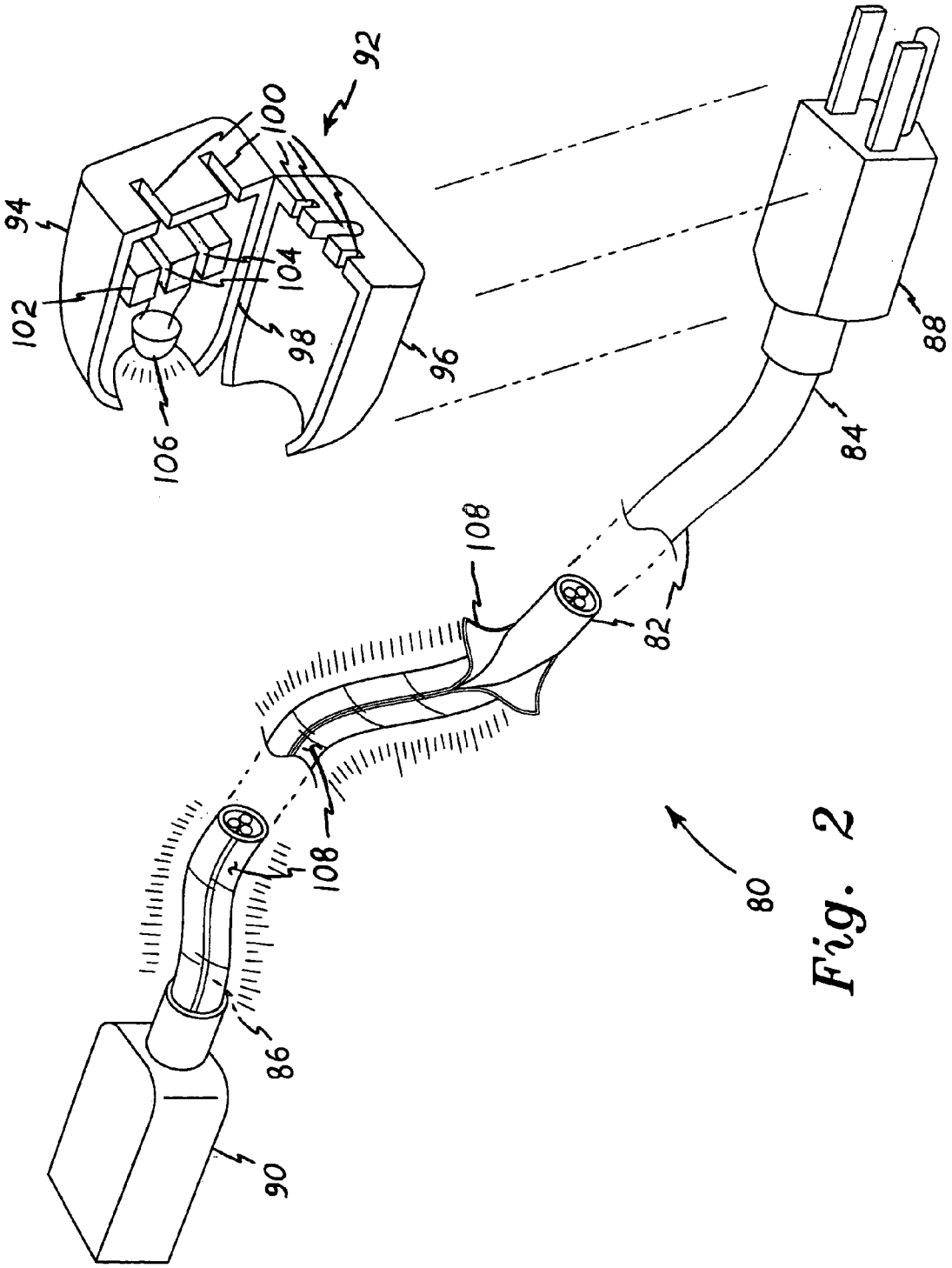

Fig. 2

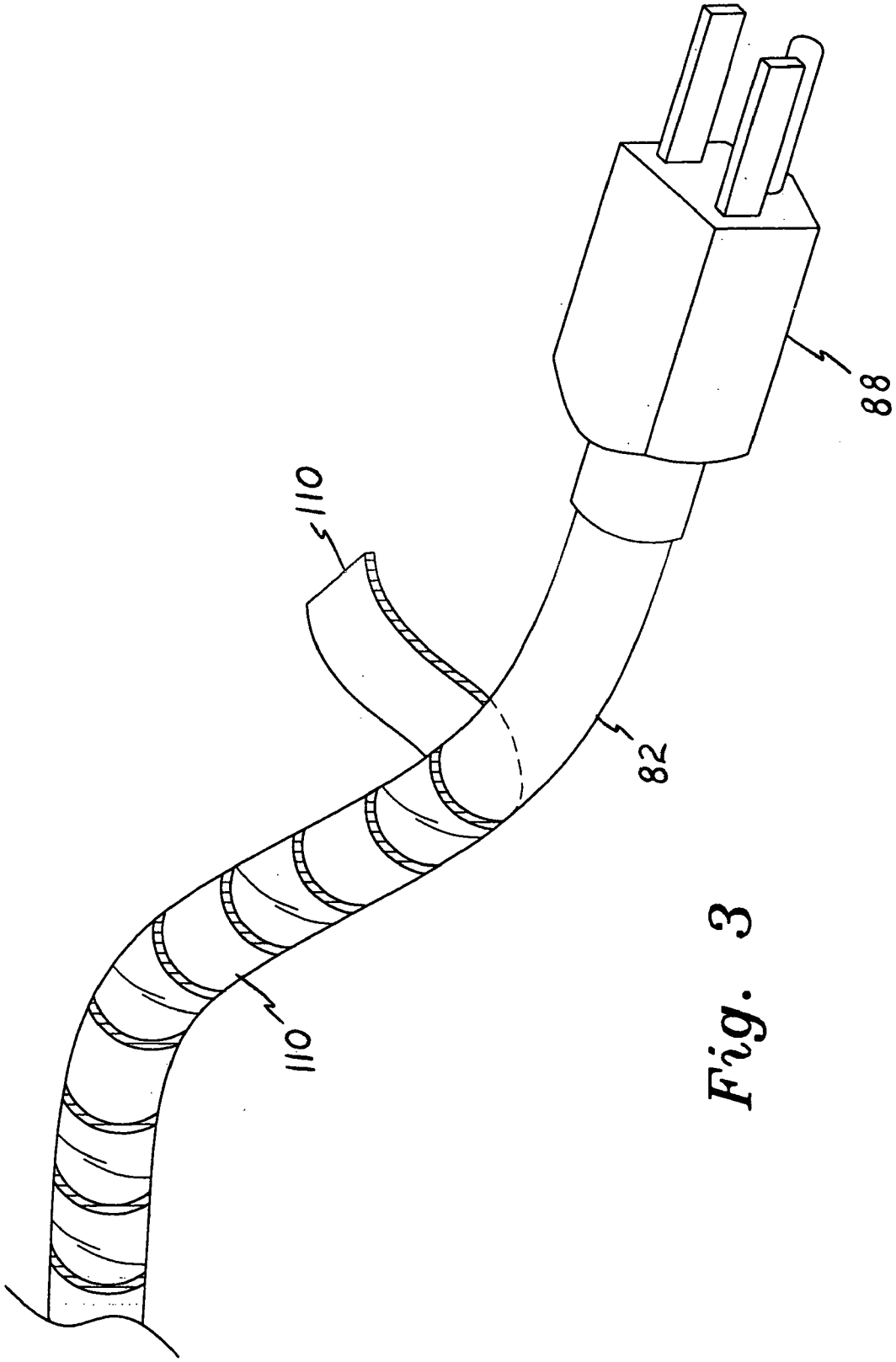

Fig. 3

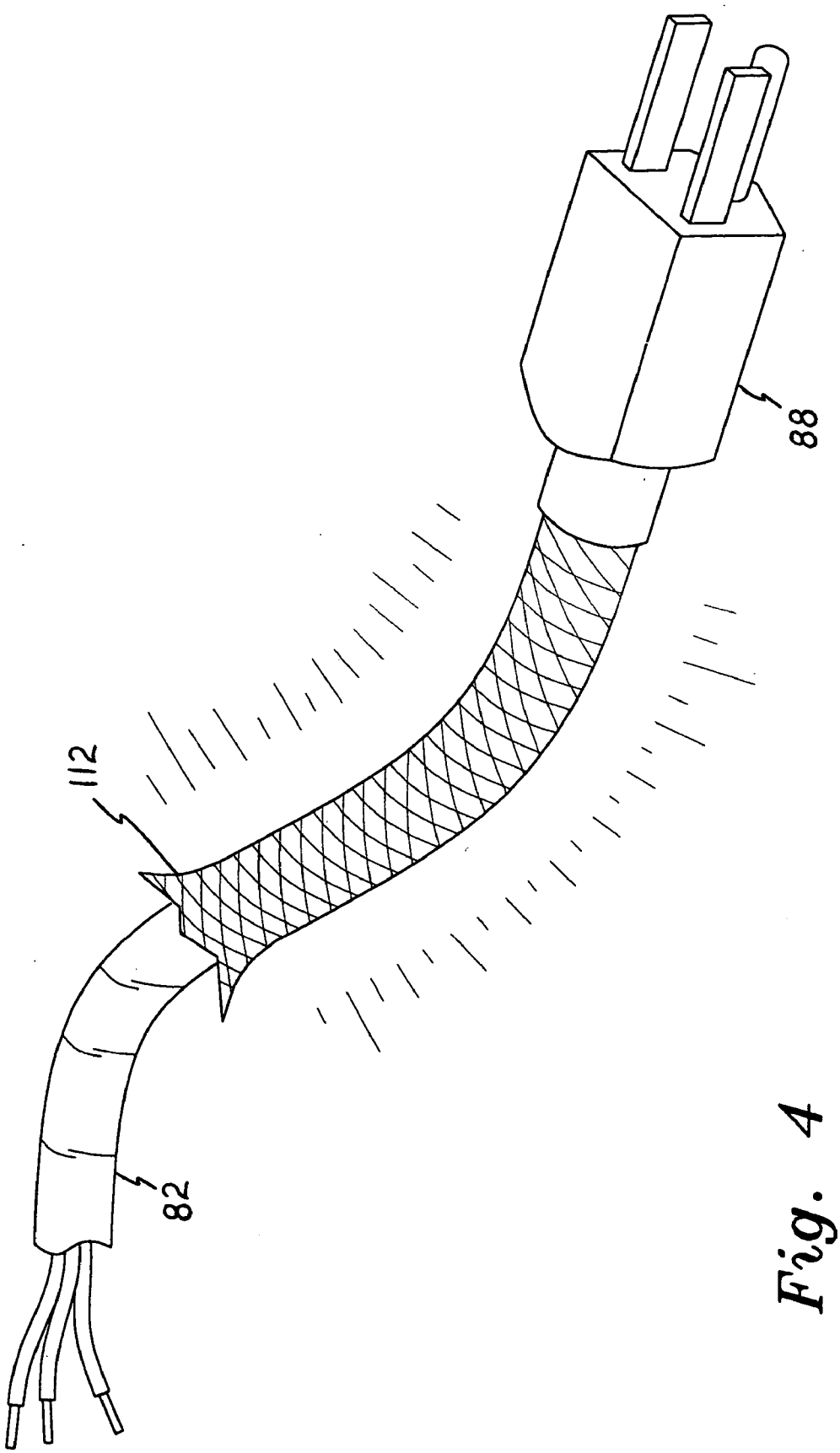

Fig. 4

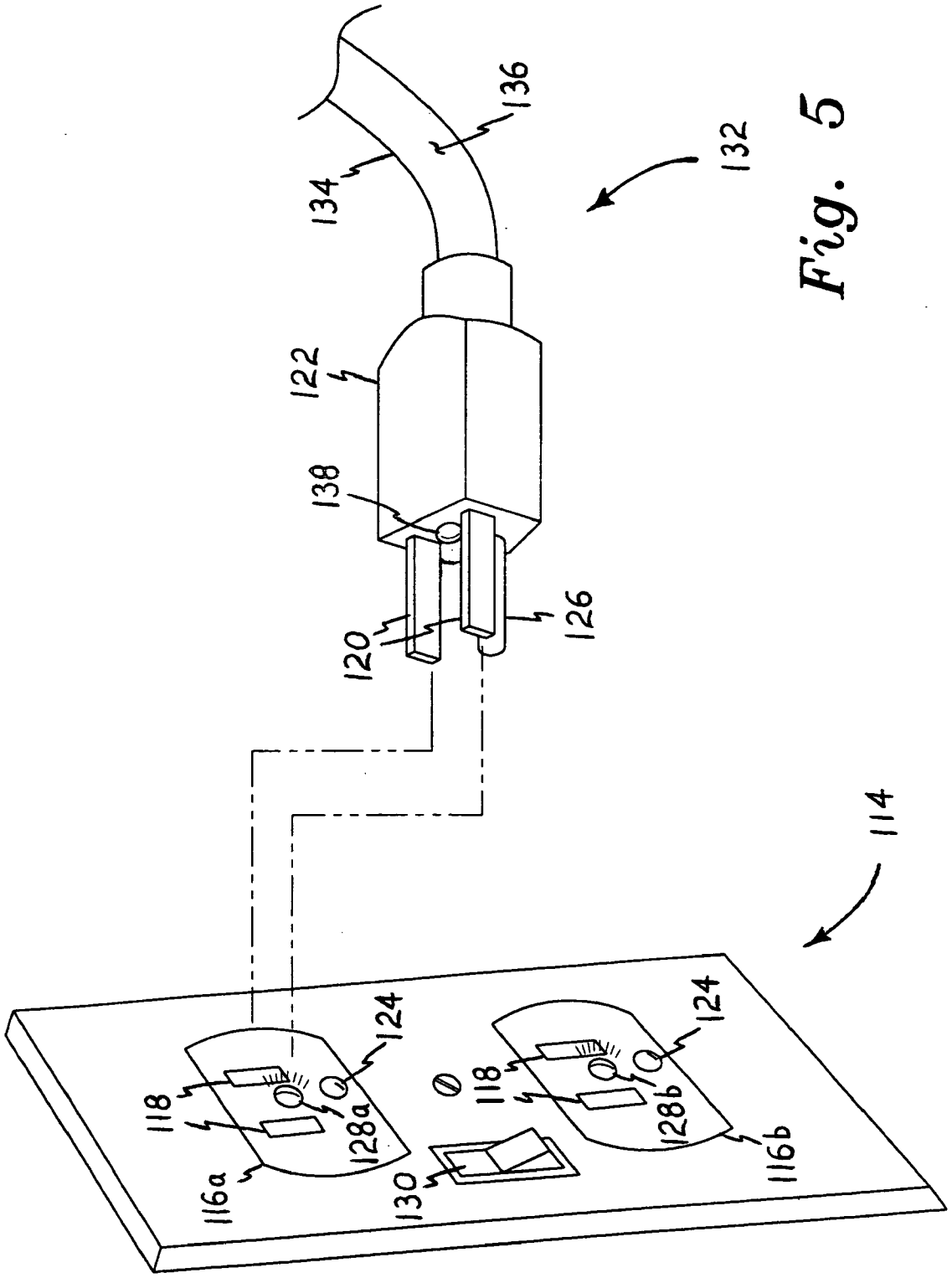
136
134
132
122
138
120
126
114
118
124
128a
116a
130
118
124
128b
116b

Fig. 5

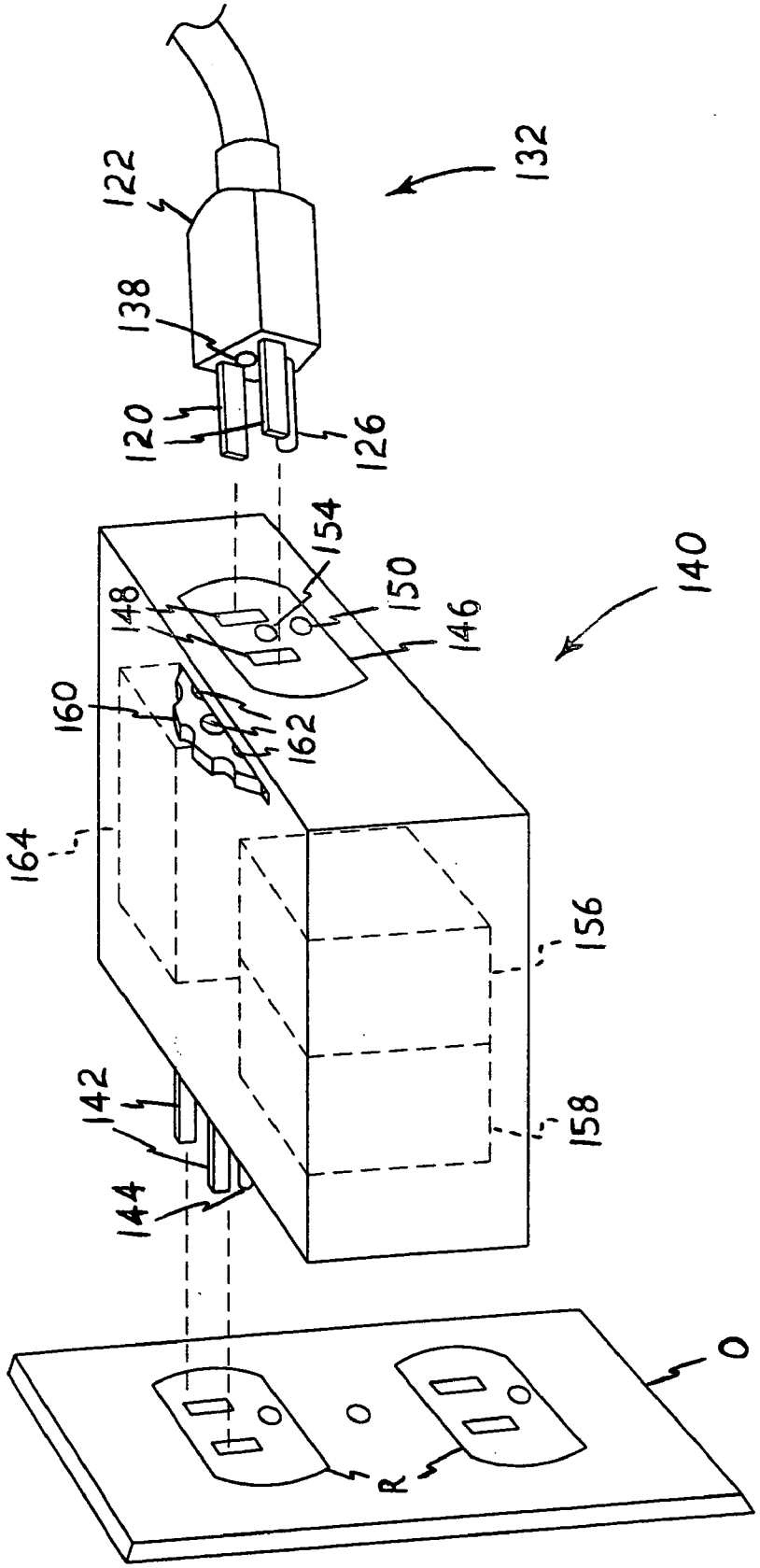
122
138
120
126
132
154
150
148
146
140
160
162
164
156
158
142
144
O
R

Fig. 6

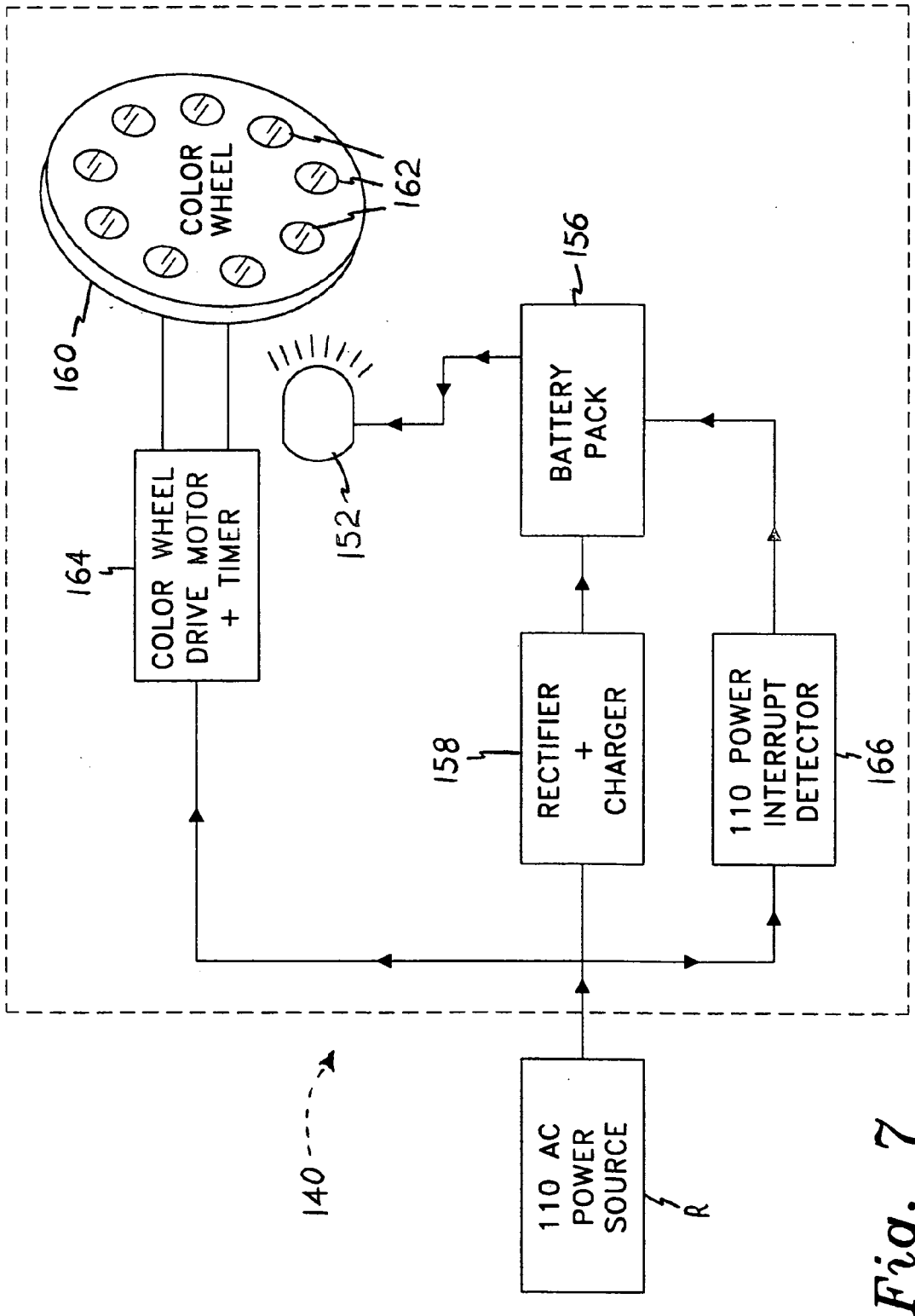
COLOR WHEEL
160
162
COLOR WHEEL DRIVE MOTOR + TIMER
164
152
BATTERY PACK
156
RECTIFIER + CHARGER
158
110 POWER INTERRUPT DETECTOR
166
110 AC POWER SOURCE
R
140

Fig. 7

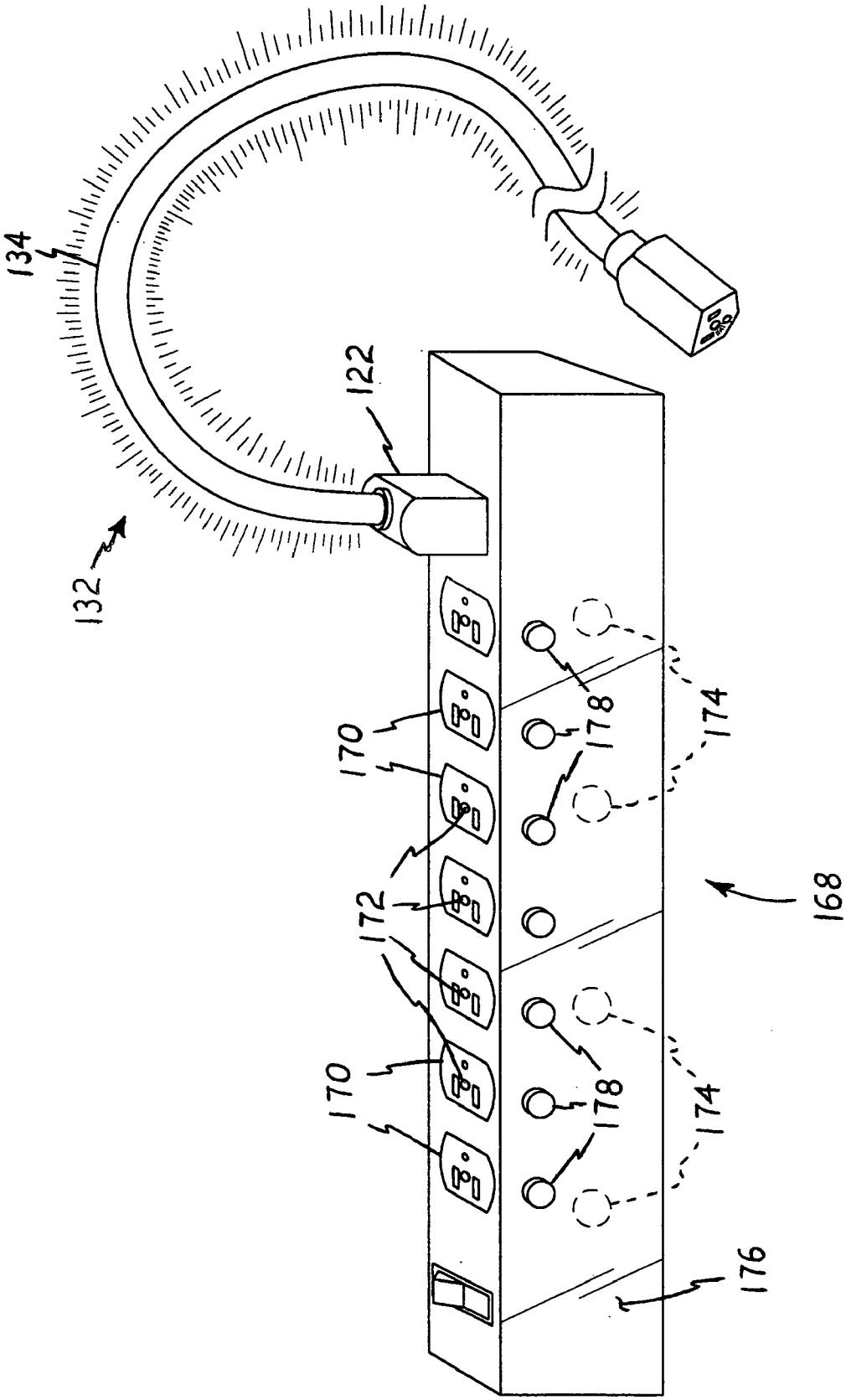

Fig. 8

ILLUMINATED ELECTRICAL CORDS AND OUTLETS

REFERENCE TO RELATED PATENT APPLICATION

[0001] This application claims the benefit of U.S. Provisional Patent Applications Ser. Nos. 60/356,978, filed on Feb. 14, 2002, and 60/363,606, filed on March 12, 2002.

BACKGROUND OF THE INVENTION

[0002] 1. Field of the Invention

[0003] The present invention relates generally to electrical power cords and electrical outlets therefor, and more specifically to means for illuminating the cords substantially along their entire lengths. Illuminated outlets and connectors are also provided.

[0004] 2. Description of the Related Art

[0005] Electrical and extension cords, power supply and data transmission cables, and other types of cords and cables carrying electrical energy and signals, conventionally comprise one or more internal conductors surrounded by an electrically insulating, opaque cover or sheath. In certain rare instances, a translucent or transparent outer cover or sheath has been provided for the electrical conductor(s) in such wiring. However, the purpose of such translucent or transparent covering, is merely to provide a different appearance for the wire than that provided by conventional opaque insulation material.

[0006] Electrical cords and cables of various types are often used in areas of relatively low illumination, and/or are extended across the floors of rooms, hallways, and other areas of pedestrian foot traffic. Yet, with the exception of a relatively few devices developed in the past (addressed in the discussion of the related art below), no illumination has been provided for such electrical cords, to alert persons as to their location for avoidance of the cord(s), and to indicate the presence of an electrical supply or current running through the cord.

[0007] The present invention responds to this problem by providing a series of embodiments of electrical cords, cables, and the like, comprising one or more electrical conductors surrounded by a translucent or transparent insulating material which emits light radially therefrom when light is transmitted through the material. The present invention also includes various embodiments of electrical connectors formed integrally with the cords, which connectors include light emitting means for providing light to the light transmissive elements of the cords. The present invention further includes various embodiments of electrical outlets which include lighting means therein for supplying light to the illuminated cords of the present invention, and means for adjusting the color of the light emitted from those outlets.

[0008] A discussion of the related art of which the present inventors are aware, and its differences and distinctions from the present invention, is provided below.

[0009] U.S. Pat. No. 3,757,102 issued on Sep. 4, 1973 to Earl W. Roberts, titled "Lamp Capsule," describes a neon bulb encapsulated within a translucent capsule, which assembly is in turn installed within a translucent electrical receptacle or connector. The neon bulb is electrically connected to the electrical conductors within the electrical receptacle or connectors, so the bulb, and thus the receptacle or connector, is illuminated whenever electrical power is provided or when the electrical connector is connected to an active source of electrical power. While the Roberts device serves to provide an indication of active electrical power and also indicates the location of the electrical outlet or connector when the device is illuminated, it stops short of providing the benefits of the present invention, with its essentially continually illuminated electrical cords and means for illuminating the cords.

[0010] U.S. Pat. No. 3,942,859 issued on Mar. 9, 1976 to Miklos B. Korodi, titled "Electrical Conductor With Light Indicating Means," describes various embodiments of an illuminated electrical conductor. In one embodiment, the light emitting element is a light bulb contained within the connector at one end of the cord, and transmits its light along a fiberoptic line which runs the length of the cord. In another embodiment, a series of discontinuities is provided in the fiberoptic strands, resulting in an illuminated cord having a series of discontinuous "dots" of light emanating therefrom. Yet another embodiment includes a neon filled channel running the length of the cord, with the channel having an electrode at each end to excite the neon gas to cause the cord to illuminate. In contrast, the present invention utilizes at least one light emitting diode (LED) disposed within at least one of the connector ends of the cord, with appropriate voltage reduction circuitry as required to provide the proper voltage for the LED. Alternatively, the LED(s) may be located within an electrical receptacle or outlet, with means provided for light communication between the receptacle or outlet and the cord body. A color wheel may be provided with the present system, to provide different colors of light emission from the cord as desired, either by manually adjusting the wheel, or automating rotation of the wheel. The present invention may also provide for automatic illumination of the outlet(s) and cord(s) connected thereto in the event of an electrical power failure, by means of a battery powered backup system.

[0011] U.S. Pat. No. 3,995,152 issued on Nov. 30, 1976 to Albert Chao et al., titled "Electrical Lighting Structure Built-In A Molded Plastic Cord Or Cable," describes a lighting system incorporating a series of small, baseless incandescent bulbs installed along the length of a flexible or rigid translucent tube. Chao et al. note that the tube may carry additional wiring. However, the lights of the Chao et al. device result in a series of spaced apart, discontinuous lights within the tube, rather than a continuously lighted cord or cable, as in the case of the present invention. Chao et al. do not provide any lighting means within a connector or receptacle at the end(s) of their device.

[0012] U.S. Pat. No. 4,118,690 issued on Oct. 3, 1978 to William C. Paynton, titled "Electrical Hazard Indicator," describes an electrical cord having a small neon bulb installed in the male connector end of the cord. The neon bulb is wired in such a way that it will illuminate at least momentarily when the male prongs are inserted into an electrically active receptacle. However, the Paynton device does not provide any lighting for the cord itself for providing any alert or warning to persons in the area of the location of the cord, nor does Paynton provide any lighting means within an electrical outlet or receptacle, as provided by the present invention.

[0013] U.S. Pat. No. 4,597,033 issued on Jun. 24, 1986 to Daniel H. Meggs et al., titled "Flexible Elongated Lighting System," describes a lighting system comprising a flexible or semi-flexible translucent tube with a series of LED lighting elements installed therein. Meggs et al. intend their lighting system to be used primarily as an emergency system to indicate doorways, etc. where standard electrical lighting has failed. The Meggs et al. system differs from the present invention in that the Meggs et al. lighting system spaces the LEDs along the length of the light emitting element, rather than only at one or both ends thereof, as in the case of the present device. Also, Meggs et al. do not provide for any electrically conductive elements in addition to the conductors for the LEDs, i.e., they do not form their device as an electrical cord, whereas the present invention comprises an illuminated, electrically conductive cord or cable.

[0014] U.S. Pat. No. 4,671,597 issued on Jun. 9, 1987 to Edward Grill, titled "Power Indicator Light," describes a male electrical plug having a neon indicator light therein to indicate when the associated electrical cord is receiving power from the electrical receptacle into which the plug is inserted. The resulting device closely resembles the illuminated electrical plug of the Paynton '690 U.S. patent, discussed further above. The same points raised in the discussion of the Paynton '690 U.S. patent, are seen to apply to the Grill illuminated electrical plug as well.

[0015] U.S. Pat. No. 4,984,999 issued on Jan. 15, 1991 to Sam S. Leake, titled "String Of Lights Specification," describes an electrical line comprising two conductors which receive a relatively low voltage from a transformer. The transformer is adapted for plugging into a conventional electrical receptacle. A series of LEDs is installed along the length of the electrical line, with contact elements which penetrate the insulation of the electrical line to connect electrically with the conducting wires therein. Leake does not provide any other electrical conductors for powering equipment directly from the conventional electrical receptacle into which the transformer is plugged, whereas the present invention includes such conducting elements. Moreover, the Leake apparatus does not include a translucent insulating sheath for the conducting elements and cannot transmit light therealong, as provided by the present invention. The Leake light string is essentially an opaque cord having a series of external point sources of light therealong, rather than continuous light emission.

[0016] U.S. Pat. No. 5,007,857 issued on Apr. 16, 1991 to Duane E. Wright, titled "Electrical Receptacle With Power Indicator Light," describes a receptacle end for an extension cord, or a male-female adapter receptacle, with an indicator light therein. Plugging an electrical device into the receptacle end of the electrically active extension cord, or the adapter, closes a circuit across a neon light within the receptacle or adapter, to indicate that electrical power is being supplied to the electrical device. The present invention also provides an indication of electrical power delivery through the electrical cord or cable, but does so using a completely different principle, wherein an LED light disposed within the receptacle end of the cord, illuminates the translucent insulating sheath of the cord in a continuous manner along its entire length.

[0017] U.S. Pat. No. 5,051,733 issued on Sep. 24, 1991 to Donald Neuhouser, titled "High Voltage Indicator Device," describes the installation of a series of wire wraps about the circumference of a high voltage line, with the circumferential wires connected to one or more remotely located fluorescent tubes. When the high voltage line is energized, a voltage sufficient to light the fluorescent tube(s) is induced in the circumferential wire wrap, causing the tubes to light and indicate high voltage in the line. The line itself of the Neuhouser system is not lighted, whereas the present invention provides continuous lighting along the length of the cord or line, no more than low voltage passing through the line for powering an optional LED at the opposite end of the cord.

[0018] U.S. Pat. No. 5,065,142 issued on Nov. 12, 1991 to Peter J. Green, titled "Voltage Pickup Circuit And Flashing Display For High Voltage Indicator Device, And Input Electrode Therefor," describes a warning device very similar to that of the Neuhouser device discussed immediately above. Green uses a capacitive plate wrapped about the high voltage line, with the charge picked up by the plate being used to illuminate a remotely located neon light or activate a piezoelectric buzzer. As in the case of the Neuhouser system, the Green warning system does not illuminate the electrical line itself, but rather serves to illuminate a remotely situated warning light. In contrast, the present invention illuminates the translucent body of the cord itself, but does not apply any voltage to the translucent insulating body of the cord.

[0019] U.S. Pat. No. 5,207,594 issued on May 4, 1993 to Thomas R. Olson, titled "Electrical Power Extension Cord," describes embodiments of a cord having translucent end connectors with neon lights therein. The lights are connected across either the electrically active ("hot") and neutral elements of the connector, or between the electrically active element and a ground. When electrical power is connected to the cord, the neon lights are illuminated, to light the translucent connector bodies. The Olson device thus relates more closely to the devices of the Paynton '690, Grill '597, and Wright '857 U.S. patents, all discussed further above, than it does to the present invention with its continually lighted translucent cord length.

[0020] U.S. Pat. No. 5,283,429 issued on Feb. 1, 1994 to Steve Campolo, titled "Fiber Optical Monitoring System For Electrical Conductors And The Like," describes a fiberoptic system in which the optical fiber core and cladding each have refractive indices differing from one another and varying with temperature and strain. An external sensor senses the amount of light refracted from the cable and cladding, and actuates a circuit interrupter in the event the temperature and/or strain exceed(s) a predetermined value(s). Campolo does not provide any continuous, radially emitted illumination for the entire length of his fiberoptic cable, as is provided by the present invention, nor does he disclose the use of LED lighting for illuminating his cable, whereas the present system uses such LED lighting strictly for visual purposes, rather than for transmitting a signal.

[0021] U.S. Pat. No. 5,470,252 issued on Nov. 28, 1995 to Philip E. Fladung, titled "Light-Permeable Extension Cord Connector," describes an extension cord and connector elements each having an indicator light (neon, etc.) therein, connected across the electrical contacts of the connector. The indicator light is illuminated when the cord is connected to an electrical power source. No illumination of the cord

length itself is disclosed by Fladung. The Fladung device thus more closely relates to the devices of the Paynton '690, Grill '597, and Wright '857 U.S. patents, all discussed further above, than it does to the present invention with its continually lighted translucent cord length.

[0022] U.S. Pat. No. 5,602,948 issued on Feb. 11, 1997 to Joseph E. Currie, titled "Fiber Optic Illumination Device," describes a fiberoptic cable providing both radial and axial illumination therefrom. The radial illumination enables the device to serve as a visual warning device, while the axial illumination provides light from a remote source to an area where light is required. However, the Currie device does not include any electrical conductors running along the length of the fiberoptic cable, unlike the present invention wherein the primary portion of the device comprises one or more electrical conductors encased within a translucent insulating sheath for illuminating the length of the cord or line. As the Currie device does not include an electrical conductor(s) therein, no provision is made for connecting either end to an electrical power source.

[0023] U.S. Pat. No. 5,838,860 issued on Nov. 17, 1998 to Brett M. Kingstone et al., titled "Fiber Optic Light Source Apparatus And Method," describes various embodiments of a fiberoptic cable and light source therewith. The light source may include a rotary wheel having a series of differently colored lenses therein, for producing light having selectively different colors through the fiberoptic cable. The Kingstone et al. cable may also emit light laterally, according to the disclosure. However, Kingstone et al. do not provide any form of electrical conductor extending through their fiberoptic cable, and thus cannot use their cable as an extension cord to power a remotely located electrical device, as can the present invention.

[0024] U.S. Pat. No. 5,964,616 issued on Oct. 12, 1999 to Kenneth D. Eisenbraun, titled "Lighted Accessory Power Supply Cord," describes an automotive auxiliary electrical cord device for plugging into the conventional cigarette lighter socket in a motor vehicle. While Eisenbraun provides electrical conductors extending from the plug, the conductors and cord are not illuminated along their length, as is the cord of the present invention. Rather, Eisenbraun provides a light internally within the body of the plug, and a lens to direct the light outwardly from the plug body. The light is only disposed at the plug, and does not illuminate the cord length, as it does with the present illuminated extension cord invention.

[0025] U.S. Pat. No. 6,159,037 issued on Dec. 12, 2000 to Brent D. Madsden et al., titled "Illuminated Connector," describes various embodiments of connectors or plugs adapted for use in connecting computer cables and the like to one another and to a computer(s). The plug or connector body is translucent, with an external light source (not shown in the disclosure) being used to direct light into the connector body to illuminate the body. Madsden et al. do not provide any means of illuminating a connector cord extending from their connector plug body, whereas the present invention includes means for illuminating the elongate cord or electrical line, as well as illuminating the outlets, adapters, and/or power strips to which the present illuminated electrical cords may be connected.

[0026] U.S. Pat. No. 6,319,051 issued on Nov. 20, 2001 to Chih-Kai Chang, titled "Electric Connector With A Light Penetrable Socket Shell," describes a connector socket for use in the computer field, with the socket including a translucent internal body into which the plug is inserted. Electric power to the connector results in LEDs within the external housing illuminating the internal shell, with light being emitted from the shell and outwardly from the plug receptacle of the shell. The Chang device is thus more closely related to the Madsden et al. '037 connector discussed immediately above, than to the present invention, as Chang does not disclose any means for illuminating the electrical cord extending from the connector.

[0027] Finally, U.S. Pat. No. 6,336,825 issued on Jan. 8, 2002 to Roland Seefried, titled "Electrical Connector With Light-Guiding Body," describes various connector and translucent lens configurations in which LEDs are used, with the lenses spreading their light emissions more broadly for better viewing. The Seefried connector is more closely related to the connectors disclosed in the Madsden et al. '037 and Chang '051 U.S. patents than to the present invention, as Seefried does not disclose any means of illuminating an electrical cord extending from his connector.

[0028] None of the above inventions and patents, taken either singularly or in combination, is seen to describe the instant invention as claimed. Thus illuminated electrical cords and outlets solving the aforementioned problems, are desired.

SUMMARY OF THE INVENTION

[0029] The present invention comprises various embodiments of illuminated electrical cords, i.e., cords including at least one electrical conductor element therein and having a translucent, electrically insulating outer cover or sheath which transmits light therethrough. In one embodiment, a lighting element (LED device, etc.) is installed in at least one connector end of the cord, with the LED being activated by electrical power from the electrical outlet or other electrical connector to which the cord is connected. The cable or cord may include at least some end light emission as well as side light emission, for use as a light supply at the outlet end of the cable or cord. The present invention further includes various electrical outlets, adapters, and power strips having LED illumination therein. Another embodiment of the present electrical cord is illuminated when connected to such illuminated outlets and the like.

[0030] The illuminating electrical outlets, adapters, and power strips of the present invention may also include colored lenses, and/or the LEDs may produce colored light as desired. Another embodiment of the present invention provides a color wheel having a series of differently colored lenses therein, with the user of the present invention selecting the color desired, or with colors being periodically changed by a motorized drive for the wheel. The LEDs within the outlet, adapter, or power strip units may include battery backup power and automatic switching means to activate the LED illumination in the event of a power failure.

[0031] Accordingly, it is a principal object of the invention to provide illuminated electrical cords and the like, with the cords being illuminated by lighting means within the connector end(s) of the cord, or alternatively by lighting means disposed within an electrical outlet, adapter, or power strip to which the illuminated cord is connected.

[0032] It is another object of the invention to provide illuminated electrical outlets, adapters, and power strips, having internal lighting means for transmitting light to the illuminated electrical cords of the present invention.

[0033] It is a further object of the invention to provide variably colored lighting for the present illuminated electrical cords, by means of a plurality of differently colored lenses and/or differently colored LED lights, with the lenses being manually or automatically adjustable as desired.

[0034] Still another object of the invention is to provide a battery powered backup system for the present illuminated cords and outlets, with the battery backup power being activated automatically in the event of an electrical power failure.

[0035] It is an object of the invention to provide improved elements and arrangements thereof for the purposes described which is inexpensive, dependable and fully effective in accomplishing its intended purposes.

[0036] These and other objects of the present invention will become readily apparent upon further review of the following specification and drawings.

BRIEF DESCRIPTION OF THE DRAWINGS

[0037] **FIG. 1A** is a schematic plan view in section of an exemplary male connector with an illuminated cord according to the present invention, illustrating the components thereof.

[0038] **FIG. 1B** is a schematic plan view in section of an exemplary female connector of the opposite end of the cord of **FIG. 1A**, illustrating the components thereof.

[0039] **FIG. 1C** is a schematic plan view of a phone jack type connector and cord configuration according to the present invention, illustrating the components thereof.

[0040] **FIG. 1D** is a schematic plan view of an auxiliary power plug type connector and cord configuration according to the present invention, illustrating the components thereof.

[0041] **FIG. 2** is an exploded perspective view of an alternative embodiment of the present invention, comprising cord and connector covers for adding to a conventional cord to illuminate the cord.

[0042] **FIG. 3** is a perspective view of one end of an electrical cord, showing one means for applying a translucent outer cover thereto.

[0043] **FIG. 4** is a perspective view of one end of an electrical cord, illustrating an alternative translucent cover thereover.

[0044] **FIG. 5** is an exploded perspective view of another embodiment of the present invention, comprising an illuminated electrical outlet for illuminating an electrical cord installed therein.

[0045] **FIG. 6** is an exploded perspective view of a further embodiment of the present invention, illustrating an adapter for installation in a conventional outlet for illuminating an electrical cord.

[0046] **FIG. 7** is a block diagram illustrating the operative components of a color wheel for variably coloring the light emissions as desired for an illuminated electrical cord.

[0047] **FIG. 8** is a perspective view of a power strip having a translucent body with internal lighting, and providing illumination for an electrical cord as well.

Similar reference characters denote corresponding features consistently throughout the attached drawings.

DETAILED DESCRIPTION OF THE PREFERRED EMBODIMENTS

[0048] The present invention comprises illuminated electrical cords and illuminated electrical outlets therefor. In some of the embodiments of the present invention, the electrical cords include lighting means integrated within one or both of the end connectors of the cord. In other embodiments, the cords receive light output from the illuminated outlets of the present invention. In all cases, the illuminated cords have a translucent outer cover or sheath which emits light radially therefrom when light is transmitted into the translucent sheath from either or both ends thereof. The present cords are not only decorative when illuminated, but also serve to facilitate electrical connections of devices in poorly lighted areas. The present illuminated cords also provide significant safety advantages when used in otherwise unlighted areas, as their illumination makes them readily visible in order to mark their presence to allow persons to avoid tripping over such cords.

[0049] **FIG. 1A** of the drawings illustrates a male electrical cord end and connector **10** of the present invention. The electrical cord **12** includes a pair of electrical conductor elements **14***a* and **14***b* therein, with an electrically insulating jacket or cover **16** disposed therearound. The insulating cover **16** may be formed of opaque, translucent, or transparent material, as desired. While the insulating cover **16** may be used to transmit light from the cord assembly **10** when the cover **16** is formed of a transparent or translucent material, normally the cover **16** is formed of an opaque flexible plastic material, as is conventional in the art. In such cases, an outer wrap or cover **18** of transparent or translucent flexible material is applied over the insulating cover **16**, as shown in **FIG. 1A** of the drawings. This transparent or translucent outer cover **18** is an optically transmissive material, which receives light from one or both ends thereof and re-radiates the light radially from the cover in a continuous and unbroken array.

[0050] Light is transmitted to the light transmissive cover **18** by a light **20** disposed at or within one or both of the end connector(s) of the electrical cord. Where the electrical cord is a permanently installed appliance cord or the like, the light **20** is installed within the male connector body **22** of the cord, which extends from the distal first end **24***a* of the electrical cord. However, the present invention is also adaptable to extension cords having opposed first and second ends with a male and a female electrical connector extending therefrom, with a light in each connector portion, as illustrated in **FIG. 2** and described further below.

[0051] The light **20** installed with or within the connector body **22** is preferably a light emitting diode (LED). LEDs of the present state of the art are capable of providing exceptionally bright light output with relatively low power requirements, produce very little heat, and may be selected to produce virtually any color light output desired. In the

event that an LED is used for the light source **20**, some form of voltage reduction must be provided. Accordingly, a transformer **26** is connected across the two male prongs **28***a* and **28***b* which extend from the connector body **22**, in order to supply the LED **20** with the proper voltage. No other circuitry is required, as the LED itself serves as a rectifier for the conventional alternating current received by the cord **10**. It will be seen that the present invention may also be used with a DC circuit (examples of connectors used with such circuits are illustrated in **FIGS. 1C and 1D** and discussed further below), so long as the voltage and polarity are correct for the LED.

[**0052**] A focusing lens **30** is installed within the end **24** of the cord **12**, generally between the connector body **22** and the cord **12**. The central portion of the lens **30** is not critical to the function of the cord and connector **10** of **FIG. 1A**, and in fact may be omitted. The critical portion of the lens **30** is the outer edge thereof, which is aligned with the outer translucent sleeve or sheath **18** which transmits the light radially from the cord assembly **10**.

[**0053**] The LED **20** or other light receives electrical power from the transformer **26**, which in turn receives power from the two male prongs **28***a* and **28***b* when they are connected to a conventional electrical outlet. Light emitted from the LED or light **20** passes through the edges of the lens **30**, where it is directed along the translucent outer sheath **18** of the cord **12**. The light is then re-radiated outwardly from the sides of the sheath **18** to illuminate the cord **12**. Also, in some embodiments, the connector body **22** may be formed of a transparent or translucent material if so desired, so that the light from the LED **20** will illuminate the connector body **22** as well as the cord **12**.

[**0054**] **FIG. 1B** illustrates an opposite end female electrical connector **32** for the cord assembly **10**. The second end **24***b* of the cord **12** terminates at or within the female connector **32**, which houses the two female electrical contacts **34***a* and **34***b* of the assembly. The female connector body **32** may be formed integrally with the insulating cover or jacket **16** of the cord **12**, as illustrated, or may be formed as a separate component. As in the case of the first or male connector end **22**, the second or female connector **32** may be formed of translucent or transparent materials, in order to transmit light therefrom, if so desired. It will be seen that with the construction illustrated in **FIG. 1B**, that if the female connector body **32** is transparent or translucent, that the end of the translucent outer cover or sheath **18** will illuminate the connector body **32**, when the outer cover **18** is illuminated.

[**0055**] Depending upon the length of the cord **12**, the light output of the LED or other light **20** of the first or male connector body **22**, the properties of the translucent outer cover or sheath **18**, and perhaps other factors as well, a single LED **20** located at one end of the cord assembly **10** may be sufficient to illuminate the entire length of the cord **10**. However, additional lighting may be installed with the opposite connector body or end **32**, if so desired, as illustrated in **FIG. 1B**. An optional LED or other light **36** (shown in broken lines) is provided within the second connector body **32**, directed to emit light outwardly and generally axially from the connector body **32**. This light **36** may receive its electrical power by means of separate, dedicated electrical lines **38** (shown in broken lines) which extend from the first light **20** (**FIG. 1A**) to the second light **36**. Alternatively, the second light **36** may be powered by a transformer within the connector body **32**, in much the same manner as that illustrated in **FIG. 1A**.

[**0056**] An outwardly focusing lens **40** (shown in broken lines) is provided within the end of the connector body **32**. Illumination of the light **36** results in the lens **40** directing light generally axially from the connector body **32**, allowing its use as a light source or flashlight when the opposite end connector **22** is plugged into a power source. An additional internal LED or other light **42** may be installed with the second connector body **32**, if so desired, to illuminate a translucent connector body **32**, or to direct light back along the translucent outer cover **18** by means of a lens arrangement similar to that shown in **FIG. 1A** for the light **20**.

[**0057**] **FIG. 1C** is an illustration of one end of an alternative electrical cord assembly **44** having lighting means in accordance with the present invention. (Only the removably connectable end of the assembly **44** is illustrated, with it being understood that the opposite end of the cord is permanently connected to an electrically powered or operated appliance of some type, e.g., a headset, etc.) The electrical cord assembly **44** includes a cord **46** terminating in a coaxial phone jack type connector plug **48**, as used in headsets and other similar devices. The two wires **50***a* and **50***b* of the assembly **44** terminate at a coaxial contact pin **52**, which extends from the distal end of the plug body **48**.

[**0058**] An LED or other light **54** is installed within or at the plug body **48**, and receives electrical power from a conventional transformer **56** which may be installed therewith as required, across the two wires **50***a* and **50***b* of the assembly. An annular lens **58** is installed at the end of the plug body **48** opposite the contact pin **52**, and directs light outwardly from the LED **54** and into a transparent or translucent outer cover or sheath **60**, which covers the two wires **50***a* and **50***b* of the cord assembly **44**. Thus, when the contact pin **52** is plugged into its receptacle, the transformer **56** is energized to provide appropriate power to the light **54**, which in turn emits light through the lens **58**. The lens **58** passes the emitted light into the translucent outer sheath **60** of the cord assembly **44**, whereupon the light is emitted radially from the sheath **60** to illuminate the cord assembly **44**.

[**0059**] **FIG. 1D** illustrates yet another embodiment of the present invention, comprising an auxiliary power cord assembly **62** including illumination means therein. (Again, only the removably connectable end of the assembly **62** is illustrated, with it being understood that the opposite end of the cord is permanently connected to an electrically powered or operated appliance of some type, e.g., a light, air pump, etc.) The electrical cord assembly **62** includes a cord **64** terminating in a coaxial auxiliary power plug **70** adapted for connection to a power supply receptacle. The two wires **66***a* and **66***b* of the assembly **62** are connected respectively to the shell **68** and conventional center conductor (not shown) which extend from the auxiliary power plug connector end **70** of the assembly **62**.

[**0060**] An LED or other light **72** is installed within or at the plug body **70**, and receives electrical power from a conventional transformer **74** which may be installed therewith as required, across the two wires **66***a* and **66***b* of the assembly. An annular lens **76** is installed at the end of the

plug body **70** opposite the contact shell **68**, and directs light outwardly from the LED **72** and into a transparent or translucent outer cover or sheath **78** covering the two wires **66***a* and **66***b* of the cord **64**. Operation of the illuminated electrical cord assembly **62** of **FIG. 1D** is similar to that described above for the assembly **44** of **FIG. 1C**, with the transformer **74** supplying appropriate electrical power to the light **72** when electrical contact is completed, thus illuminating the translucent outer cover **78** to emit light radially therefrom.

[**0061**] To this point, the various illuminated cord embodiments have been indicated as having the lighting systems integrated with the remainder of the cord and connector structures at the time of manufacture. However, the present invention also provides for the illumination means to be added to an otherwise conventional unlighted electrical cord and connector(s). **FIG. 2** illustrates such an embodiment, in which an extension cord **80** is equipped with the illumination means of the present invention. The extension cord **80** before the addition of the kit for converting it to an illuminated cord, is conventional, essentially comprising an elongate electrical conductor and outer insulating assembly **82** having a first end **84** and opposite second end **86**, with a first end connector **88** and second end connector **90** extending from the respective first and second ends **84** and **86**.

[**0062**] One or both end connectors **88** and/or **90** may have a cord illuminating shell **92** applied thereover, as desired. The shell **92** may be formed of an opaque, translucent, or transparent flexible plastic material having two components **94** and **96** joined by a living hinge **98**, or may have another configuration or be formed of another material as desired. Conventional latch means (e.g., snaps, etc., not shown) may be provided to lock the two components **94** and **96** together. Clearance slots **100** are formed in the two shell components **94** and **96**, to clear the prongs of a male connector **88** when installed thereon or to allow insertion of the male contacts into a female connector **90** when the illuminating shell **92** is installed thereon.

[**0063**] A slotted internal contact block **102** is contained within the shell **92**, with its slots **104** fitting around the male contact prongs of the male connector **88** or male contacts inserted into a female connector **90**, when the illuminating shell **92** is installed thereon. The contact block **102** may contain a conventional transformer, shown schematically as component **26** in **FIG. 1A** of the drawings, or the transformer may be located elsewhere within the illuminating shell **92**. It will be appreciated that such a transformer need not be very large, as the amperage required for the operation of the light, particularly in the case of an LED, is very low. A light **106**, preferably an LED, is installed within the illuminating shell **92**, and oriented to emit light along the cord **82** extending from the connector(s) **88** and/or **90**, and illuminating shell **92** attached thereto.

[**0064**] The cord **82** is wrapped with a transparent or translucent covering **108**, which receives the light emitted from the light source **106** of the illuminating shell **92** and redirects or emits the light radially therefrom, to illuminate the cord assembly **82**. The covering **108** may comprise a wrap which is applied longitudinally along and over the outer insulating material of the cord **82**, and secured thereto by adhesive, or attached mechanically by plastic wire ties, etc., as desired. **FIG. 3** illustrates an alternative embodiment of such a wrap. The wrap of **FIG. 3** comprises an elongate translucent or transparent striped sheet **110** applied in a spiral pattern around and over the outer insulating material of the cord **82**, and bonded thereto e.g. by heat, chemical reaction, etc.

[**0065**] **FIG. 4** illustrates yet another embodiment of an illuminated exterior wrap or sleeve for an electrical cord, in which a woven or braided sleeve **112** of translucent material (e.g., hollow core polyethylene rope, etc.) is passed over the electrical cord **82**. The braided sleeve **112** may be expanded diametrically to pass over the relatively wider electrical connector end **88** of the cord assembly, or may be installed over the outer insulating jacket of the cord **82** before installing the connector **88** to the end of the cord. The connector **88** may include a light source integrally therewith, as in the example shown in **FIG. 1A**, or may be illuminated by an illuminated shell, as illustrated in **FIG. 2** of the drawings.

[**0066**] Yet another embodiment of the present invention provides for electrical power outlets and the like, which also contain lighting therein for illuminating electrical cords which do not contain or include their own lighting means therewith. **FIG. 5** illustrates one such embodiment, comprising an electrical outlet **114** (e.g., wall outlet, etc.) having a pair of electrical receptacles **116***a* and **116***b* therein. Each receptacle **116**a and **116**b includes the conventional electrical contact blade slots **118** for receiving the electrical contact blades **120** of an electrical connector plug **122**, and may also include a grounding pin passage **124** to accept the ground pin **126** of the plug **122**, if so equipped. It will be noted that each receptacle **116***a* and **116***b* also includes a light, respectively **128***a* and **128***b*, therein, e.g., an LED, or alternatively other light type. These lights **128***a* and **128***b* are oriented to emit light outwardly from their receptacles, and are controlled by a switch **130**.

[**0067**] The electrical cord assembly **132** used with the illuminating receptacle **114**, includes an elongate electrical conductor and insulator cord **134** from which the plug **122** extends. (The cord assembly **132** may comprise an extension cord, with a conventional female electrical connector at the opposite end thereof, somewhat like the cord assembly **80** of **FIG. 2**, or may comprise an electrical appliance cord with the opposite end being permanently connected to an electrical device of some sort.) The electrical cord and its outer insulating jacket **134** are covered with a translucent or transparent outer cover or wrap **136**, examples of which are illustrated in **FIGS. 1A through 4** of the drawings.

[**0068**] Rather than including an electrically powered light source within the plug **122** (or surrounding illuminated shell), the illuminated cord assembly **132** of **FIG. 5** receives all of its light from the outwardly directed light **128***a* or **128***b* of the corresponding receptacle **116***a* or **116***b*, to which the electrical plug **122** is connected. The distal end of the plug **122**, i.e., the end abutting the receptacle when the plug is installed therein, includes an inwardly focusing lens **138** which receives the light output from the appropriate light source **128***a* or **128***b* and focuses it through the plug **122** body to illuminate the translucent or transparent outer cover or wrap **136** of the cord **134**. The illumination principle is generally similar to that disclosed in **FIG. 1A** of the drawings, but rather than having a light source integral with the

plug body, the cord **132** of **FIG. 5** receives its light from another source, i.e., the light **128***a* or **128***b* of the electrical outlet **114**.

[**0069**] **FIG. 6** illustrates another embodiment of the illuminating electrical power sources or outlets of the present invention, comprising a portable adapter **140** which may be plugged into an electrical receptacle R of a conventional outlet O, and which provides illumination for a lighted electrical cord assembly which may be connected thereto. The adapter **140** includes a pair of male electrical contact prongs or blades **142**, and may further include a ground pin **144** extending therefrom, which insert removably into one of the receptacles R of the outlet O. The opposite side or face of the adapter **140** includes an electrical receptacle **146** therein, having a pair of electrical contact blade slots **148** and which may further include a ground pin passage **150**, which slots **148** and passage **150** are adapted to receive the mating electrical contact blades **120** and ground pin **126** of the electrical connector plug **122** of an illuminated electrical cord assembly **132**, as shown in **FIG. 5** and described in detail further above. Additional electrical receptacles, not shown but identical to the single adapter receptacle **146** shown in **FIG. 6**, may be provided in the adapter **140**.

[**0070**] The adapter receptacle **146** also includes an LED or other light source **152** (shown in the block diagram of **FIG. 7**) and a lens **154**. The lens **154** is positioned within the adapter receptacle **146** so as to be aligned with the inwardly focusing lens **138** of the connector plug **122** of the cord assembly **132** when the plug **122** is plugged into the adapter receptacle **146**, in the manner described further above for the illuminated outlet receptacles **116***a,* **116***b* and illuminated cord assembly **132** of **FIG. 5**.

[**0071**] The adapter receptacle light **152** receives its power from a conventional transformer (not shown in **FIG. 6**, but using essentially the same circuitry as that illustrated schematically for the transformer **26** of **FIG. 1A**), which in turn receives electrical power from the outlet O when the adapter **140** is installed therein. Alternatively, the light **152** may be powered by a conventional electrical storage cell or battery **156** and rectifier and charger device **158**, as shown in broken lines within the adapter **140** of **FIG. 6**. The addition of electrical battery power for the light **152** allows the adapter **140** to be used to illuminate electrical cords and the like where there is no other source of electrical power, allowing the present invention to be used e.g. on camping trips for illuminating tent ropes and the like equipped with a translucent outer wrap in the manner of the electrical cords of the present invention, and other similarly configured ropes, cords, lines, etc.

[**0072**] The adapter **140** of **FIG. 6** may further include a device for changing or varying the color of light received by the electrical cord **132**, if so desired. In **FIG. 6**, a color wheel **160** is installed immediately within the adapter receptacle **146**, with the wheel **160** having a rotary axis or bearing disposed about one of the blade contact slots **148** and a series of lenses or segments **162** each having different colors from one another disposed circumferentially thereabout. The colored lenses **162** are positioned radially from the central rotary axis of the wheel **160** so as to align selectively with the lens **154** of the receptacle **146**.

[**0073**] The color wheel **160** may be operated manually, by manipulating the serrated edge of the wheel **160** which extends from the case of the adapter **140** to position a specifically colored lens or segment **162** between the light **152** and lens **154** as desired. Alternatively, the adapter **140** may include a conventional electric motor and reduction drive **164** (shown in broken lines in **FIG. 6**), which automatically rotates the color wheel **160** in order to vary the colors emitted by the adapter **140** and thus the colors emitted by the illuminated cord **132**. A conventional timer (noted in the block diagram of **FIG. 7**) may be incorporated with the device, to stop the drive system **164** for some predetermined period of time on each color, as desired. The electrical storage battery **156** may also be used to power the motor and reduction drive assembly **164**, if so desired, thus allowing the automatic illumination of the cord **132** using different colors, without need for conventional 110-115 volt power.

[**0074**] **FIG. 7** is a block diagram illustrating the relationship between the various components of the adapter **140** of **FIG. 6**. In **FIG. 7**, all of the various components of the adapter **140**, i.e., a light **152**, battery pack **156**, rectifier and charger **158**, color wheel **160**, and drive motor and timer assembly **164** for the color wheel, are shown within the case or housing of the adapter **140**, represented by a broken line around the above noted components. A conventional power interrupt detector **166**, operates to activate the battery pack **156** automatically when loss of power from the electrical receptacle R is detected.

[**0075**] **FIG. 8** of the drawings illustrates still another embodiment of the present invention, comprising an illuminated power strip **168** which may be used to illuminate an illuminated cord assembly **132**. The power strip **168** includes a conventional power cord (not shown), which is installed in a conventional electrical receptacle, e.g., a receptacle R of the outlet O of **FIG. 6**, to supply electrical power to the power strip **168**. The power strip **168** includes a series of illuminating electrical receptacles **170** therein, with each of the receptacles **170** having a light **172** (e.g., LED, etc.) therein, similarly to the illuminating receptacles **116***a* and **116***b* of **FIG. 5** of the drawings. Each receptacle light **172** is positioned within its respective receptacle **170** so as to shine into the internally directed lens in the end of the male plug end **122** of the cord assembly **132**, as shown in **FIG. 5** of the drawings.

[**0076**] The power strip **168** includes one or more lights (LEDs, etc.) **174** therein. Preferably, the outer case, shell, or housing **176** of the power strip **168** is formed of translucent or transparent material, with the internal light(s) **174** serving to illuminate the power strip **168** when electrical power is applied thereto. In addition, the light **172** of each of the electrical receptacles **170** is controlled by a switch **178** (e.g., push button switch, as shown, or rocker, toggle, etc. switch). Each of the receptacle lights **172** may be a different color from one another, and/or be colored differently by means of differently colored lenses, if so desired.

[**0077**] The power strip **168** of **FIG. 8** may also include essentially the same circuitry as that disclosed in the adapter of **FIG. 6** and discussed further above, i.e., one or more color wheels for varying the color output of the lights **172**, motor means for driving the color wheel(s), a battery powered backup system for illuminating the lights **172** and/or **174** in the event that external electrical power is not available, and a rectifier and charging system to automatically maintain the battery charge when the device is connected to an external electrical source (e.g., 110-115 volt outlet).

[0078] In conclusion, the present illuminated electrical cords and outlets provide a much needed means of illuminating electrical cords and the like in areas of relatively low illumination. The present invention lends itself not only to use with appliance and extension cords, but also to auxiliary power cords, computer and telephone power and data cords, etc. The present invention also includes means for modifying a conventional electrical cord with an illuminating outer cover, which cord may be used with one of the illuminating outlets of the present invention. Such outlets may comprise wall outlets, portable adapters, and power strips, each of which includes means for illuminating a properly configured electrical cord which is installed therein. Such outlets may also include means for coloring the light output therefrom, as desired. The present illuminated cords and outlets thus not only provide an important safety function for electrical cords in areas of low illumination, but also provide a decorative function as well.

[0079] It is to be understood that the present invention is not limited to the embodiments described above, but encompasses any and all embodiments within the scope of the following claims.

We claim:

1. An illuminated electrical supply line, comprising:

an electrical cord having a first end and a second end opposite said first end;

at least one electrical conductor disposed within said electrical cord;

a first end connector and a second end connector extending respectively from said first end and said second end of said electrical cord;

an electrically insulating, translucent cover surrounding said at least one electrical conductor and emitting light received therein, radially therefrom in a continuous array; and

a light disposed at one of said end connectors, selectively emitting light outwardly therefrom and into said translucent cover of said electrical cord, when activated.

* * * * *