US007019658B1

(12) **United States Patent**
Erickson et al.

(10) **Patent No.: US 7,019,658 B1**
(45) **Date of Patent: Mar. 28, 2006**

(54) **CABLE TRAFFIC INDICATOR**

(75) Inventors: **Craig S. Erickson**, Stevenson Ranch, CA (US); **David Naghi**, Los Angeles, CA (US); **Herschel Naghi**, Los Angeles, CA (US)

(73) Assignee: **Mobi Technologies, Inc.**, Beverly Hills, CA (US)

(*) Notice: Subject to any disclaimer, the term of this patent is extended or adjusted under 35 U.S.C. 154(b) by 85 days.

(21) Appl. No.: **10/677,994**

(22) Filed: **Oct. 2, 2003**

Related U.S. Application Data

(60) Provisional application No. 60/451,833, filed on Mar. 4, 2003.

(51) **Int. Cl.**
G08B 21/00 (2006.01)

(52) **U.S. Cl.** **340/635**; 340/654; 340/660; 340/815.45

(58) **Field of Classification Search** 340/635, 340/686.1, 687, 660, 661, 656, 815.45, 654
See application file for complete search history.

(56) **References Cited**

U.S. PATENT DOCUMENTS

3,471,784 A * 10/1969 Arndt et al. 324/126
4,890,102 A 12/1989 Oliver
4,945,341 A * 7/1990 Buttimer 340/568.3
5,051,733 A * 9/1991 Neuhouser 340/660
5,065,142 A * 11/1991 Green 340/660
5,081,627 A * 1/1992 Yu 714/46
5,225,816 A * 7/1993 Lebby et al. 340/653
5,475,371 A * 12/1995 Dunk et al. 340/660
5,892,430 A * 4/1999 Wiesman et al. 340/310.01
5,969,632 A * 10/1999 Diamant et al. 340/5.3
6,095,851 A 8/2000 Laity et al.
6,159,037 A 12/2000 Madsen et al.
6,165,006 A * 12/2000 Yeh et al. 439/490
6,241,550 B1 6/2001 Laity et al.
6,256,318 B1 * 7/2001 O'Callaghan et al. 370/447
6,259,170 B1 7/2001 Limoge et al.
6,300,877 B1 10/2001 Schannach et al.
6,361,357 B1 3/2002 Stillwell et al.
6,428,361 B1 8/2002 Imschweiler et al.
6,431,906 B1 8/2002 Belopolsky
6,448,901 B1 9/2002 Adams et al.
6,456,091 B1 9/2002 Lee et al.
6,456,204 B1 * 9/2002 Riley et al. 340/815.45
6,483,712 B1 * 11/2002 Oliphant et al. 361/737
6,577,243 B1 6/2003 Dannenmann et al.
6,765,479 B1 * 7/2004 Stewart 340/310.01

OTHER PUBLICATIONS

Monster Cable—Computer, http://www.monstercable.com/computer/, 1 page.
Monster Computer, http://www.monstercable.com/computer/printer.asp, pp. 1-2.

(Continued)

Primary Examiner—Daniel Wu
Assistant Examiner—Travis R. Hunnings
(74) *Attorney, Agent, or Firm*—Christie, Parker & Hale, LLP

(57) **ABSTRACT**

A cable providing a visual indication of traffic including a wire and connector. The connector includes detection circuitry capable of detecting traffic on the cable and generating a detection signal responsive to the traffic. A traffic indicator provides the visual indication of the traffic responsive to the detection signal. The detection circuitry includes driving circuitry coupled to the wire, that carries a data signal. The detection circuitry also includes a transistor. The driving circuitry drives the transistor responsive to the data signal to generate the detection signal, which is used to drive the traffic indicator. The connector may have an inner casing for partially enveloping the detection circuitry, and an outer casing for partially enveloping the inner casing.

16 Claims, 11 Drawing Sheets

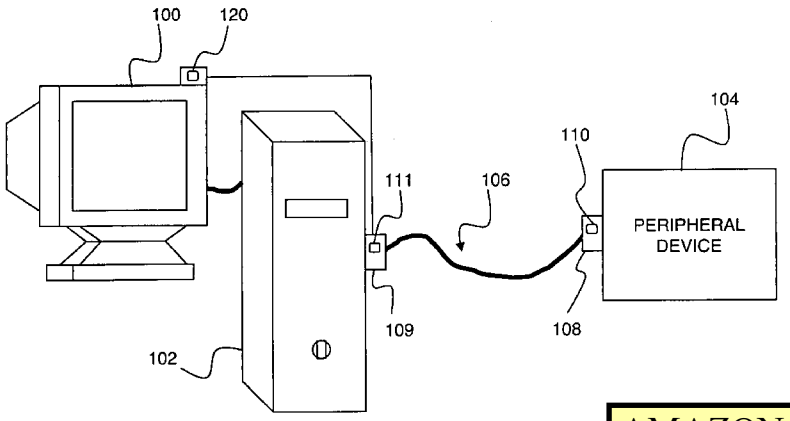

AMAZON.COM, INC. ET AL.
EXHIBIT 1014

OTHER PUBLICATIONS

Monster Computer—High Speed, Maximum Performance DataSafe™ Printer to PC IEEE 1284 Connection, http://www.monstercable.com/computer/productPageComputer.asp?pin=383, pp. 1-2.

Monster Computer—Printer to PC IEEE 1284 Connection with Winky Blinky, http://www.monstercable.com/computer/productPageComputer.asp?pin=917, pp. 1-2.

Printer to PC IEEE 1284 Connection with Winky Blinky, http://www.monstercable.com/ProductPopup.asp?pin=917&holder=photoLrg, 1 page.

Printer to PC IEEE 1284 Connection with Winky Blinky, http://www.monstercable.com/product/Popup.asp?pin=917&holder=photoAlt1, 1 page.

* cited by examiner

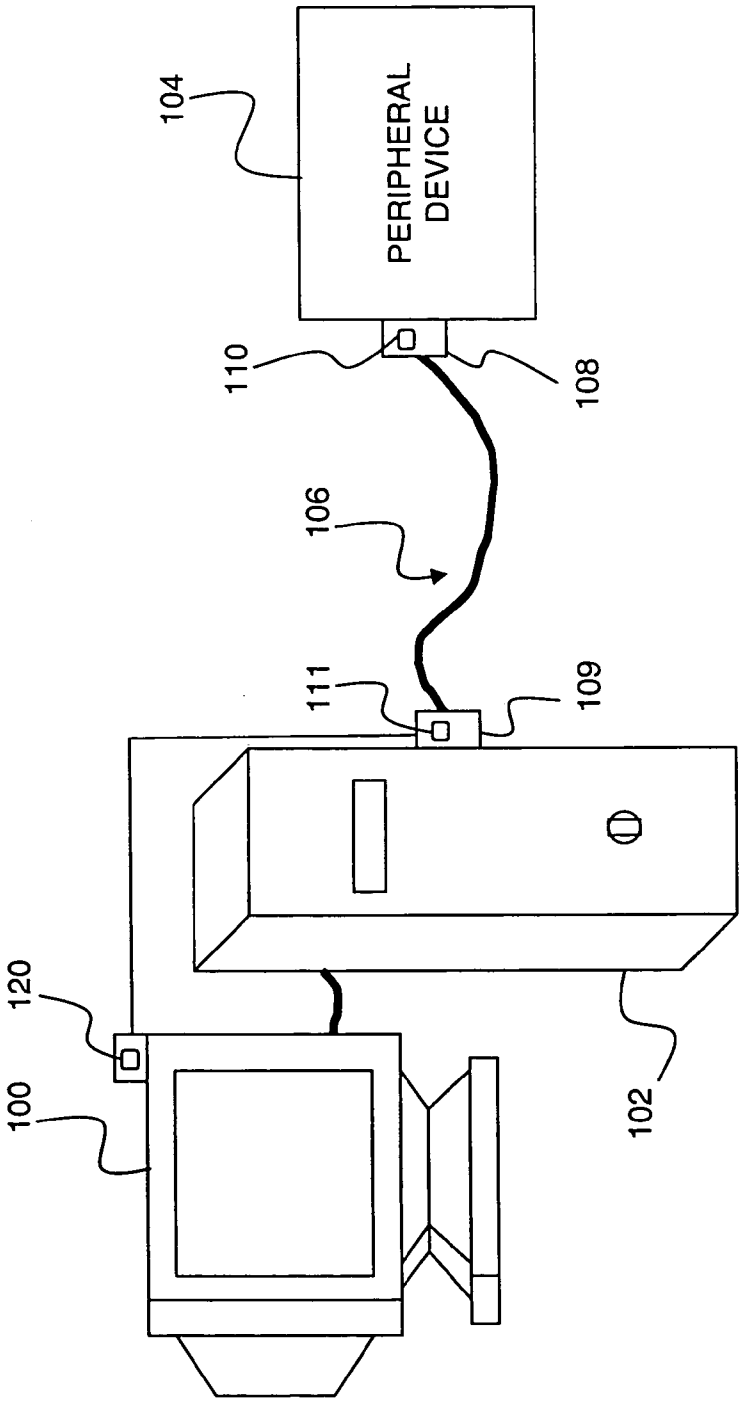

FIG. 1

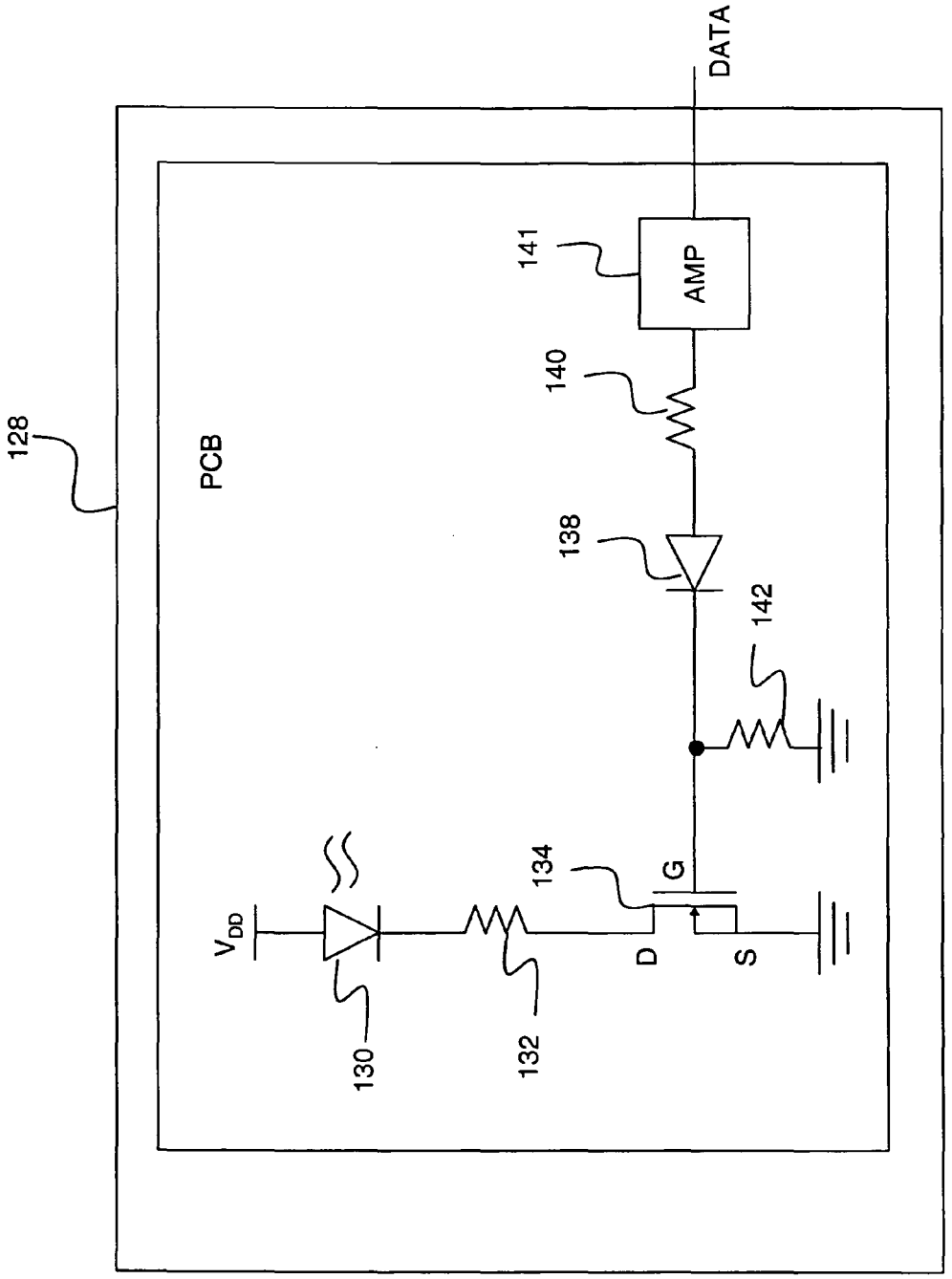

FIG. 2

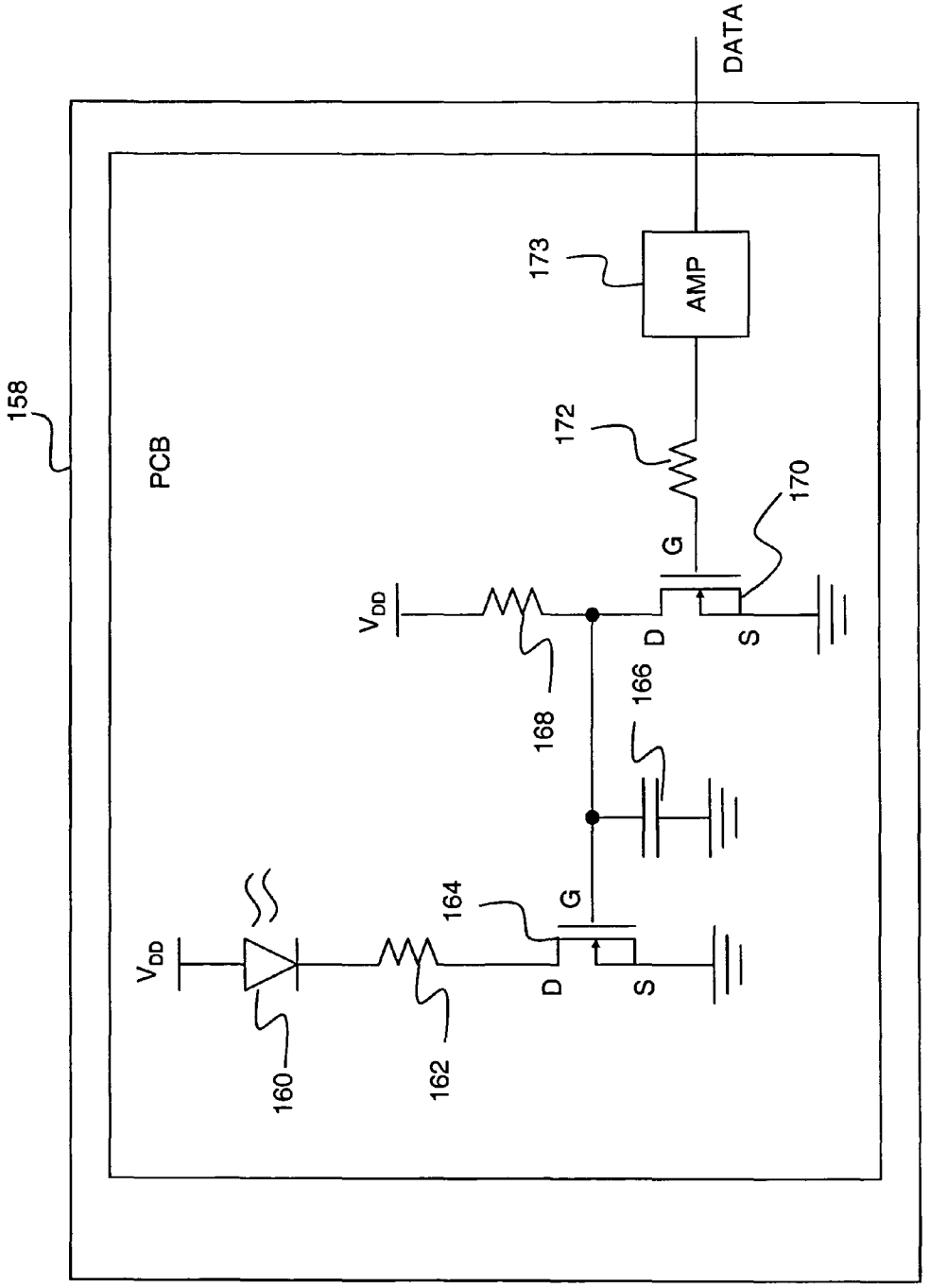

FIG. 3

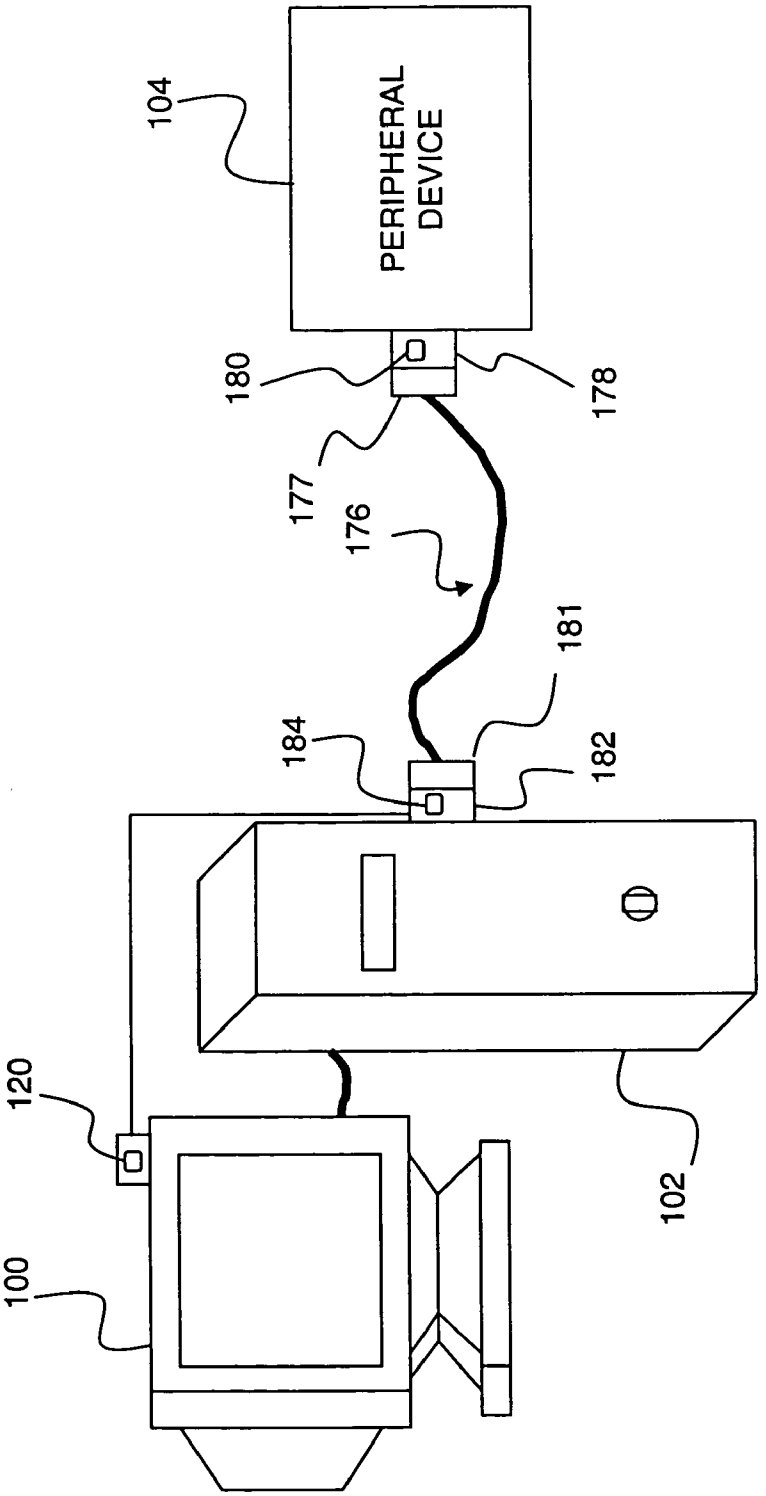

FIG. 4

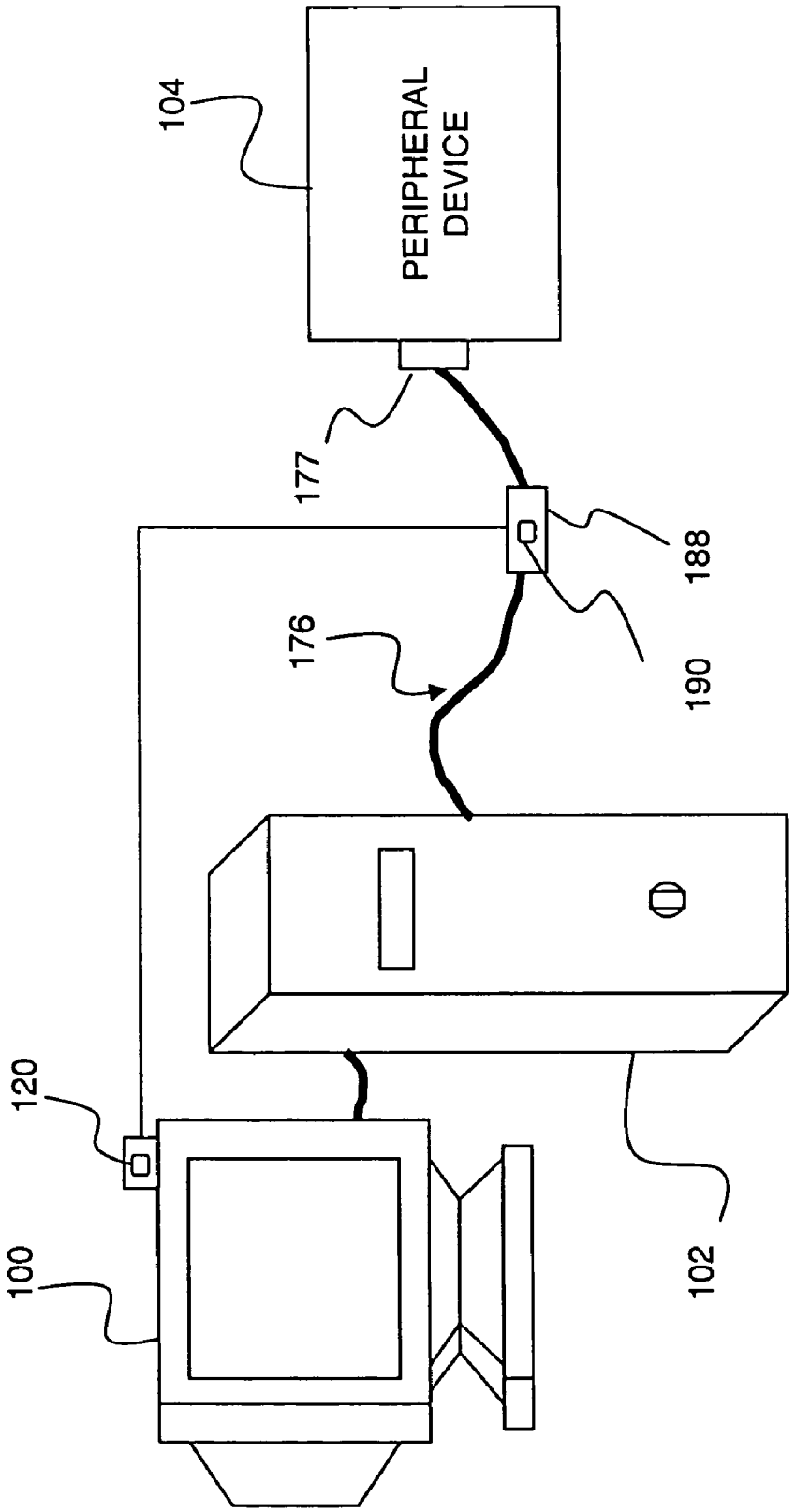

FIG. 5

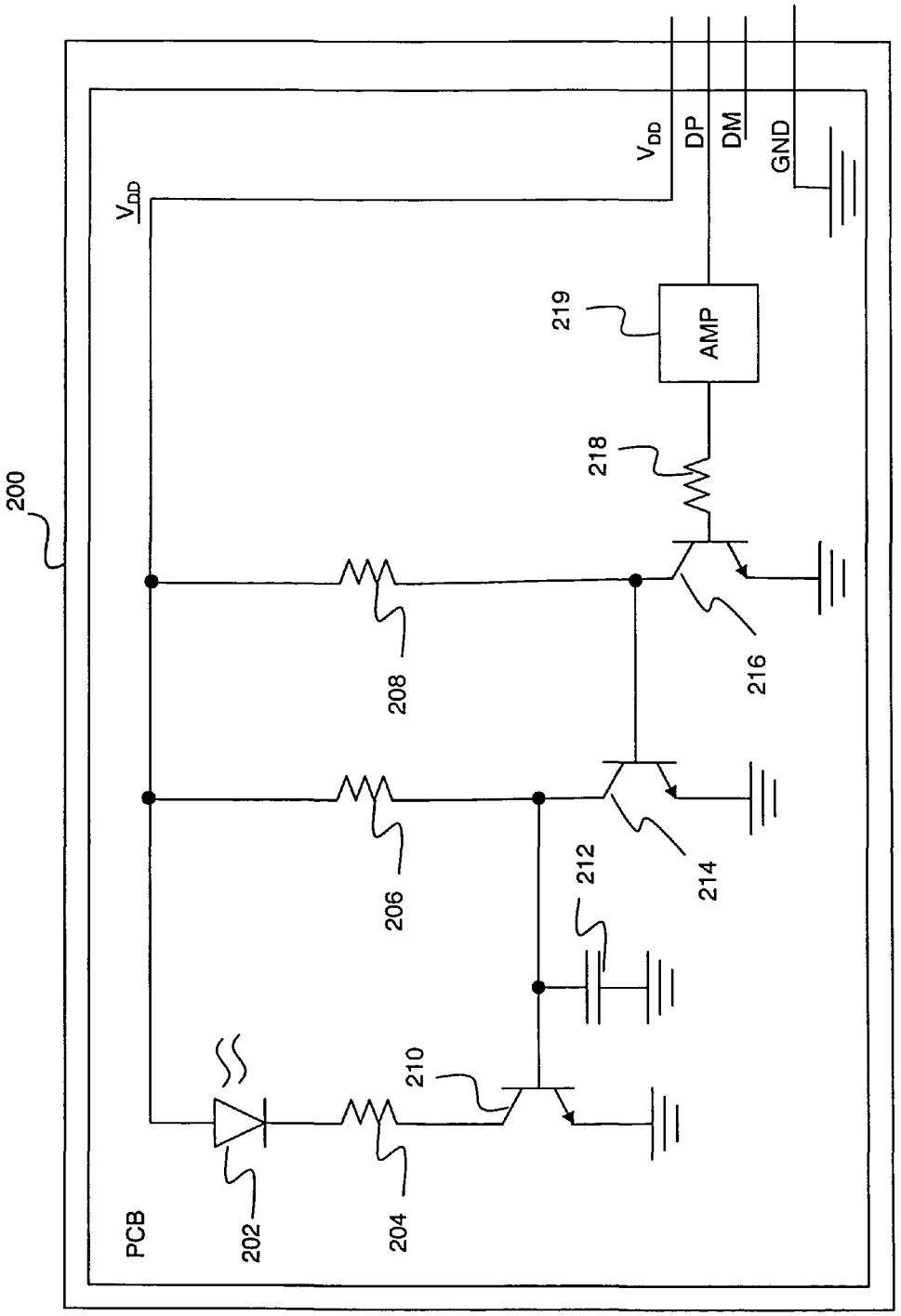
200
PCB
V_{DD}
V_{DD}
DP
DM
GND
AMP
219
218
216
214
212
210
208
206
204
202

FIG. 6

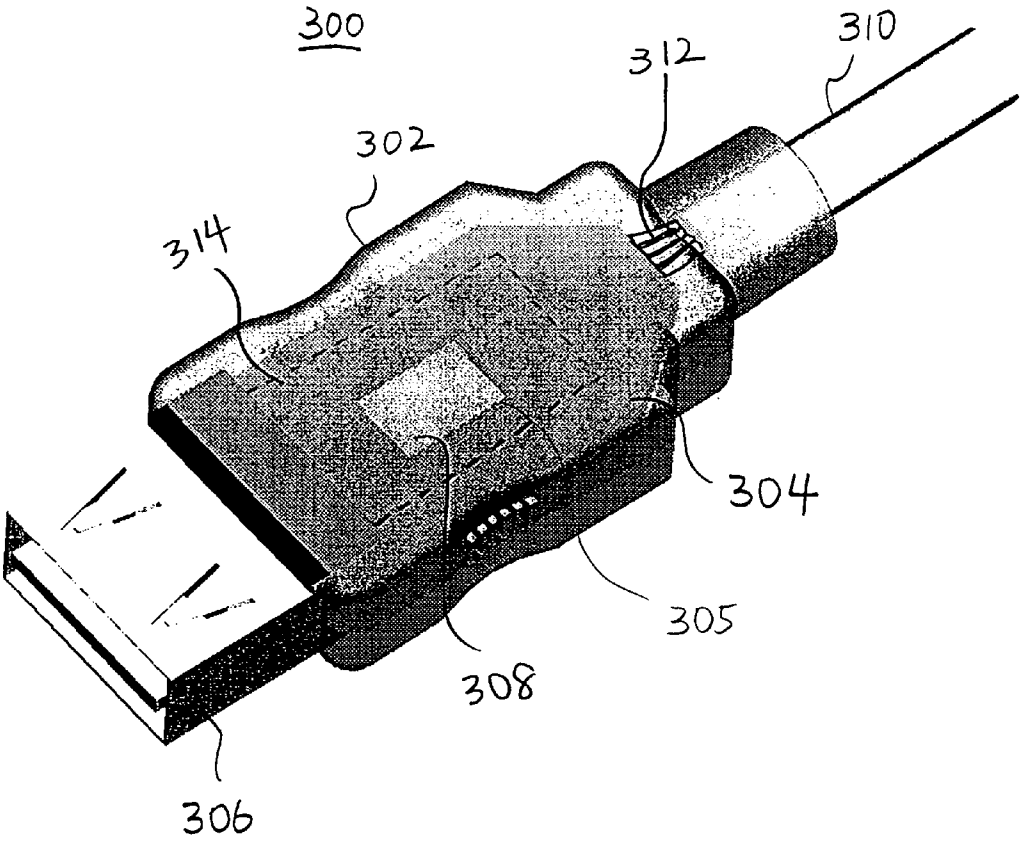

FIG. 7

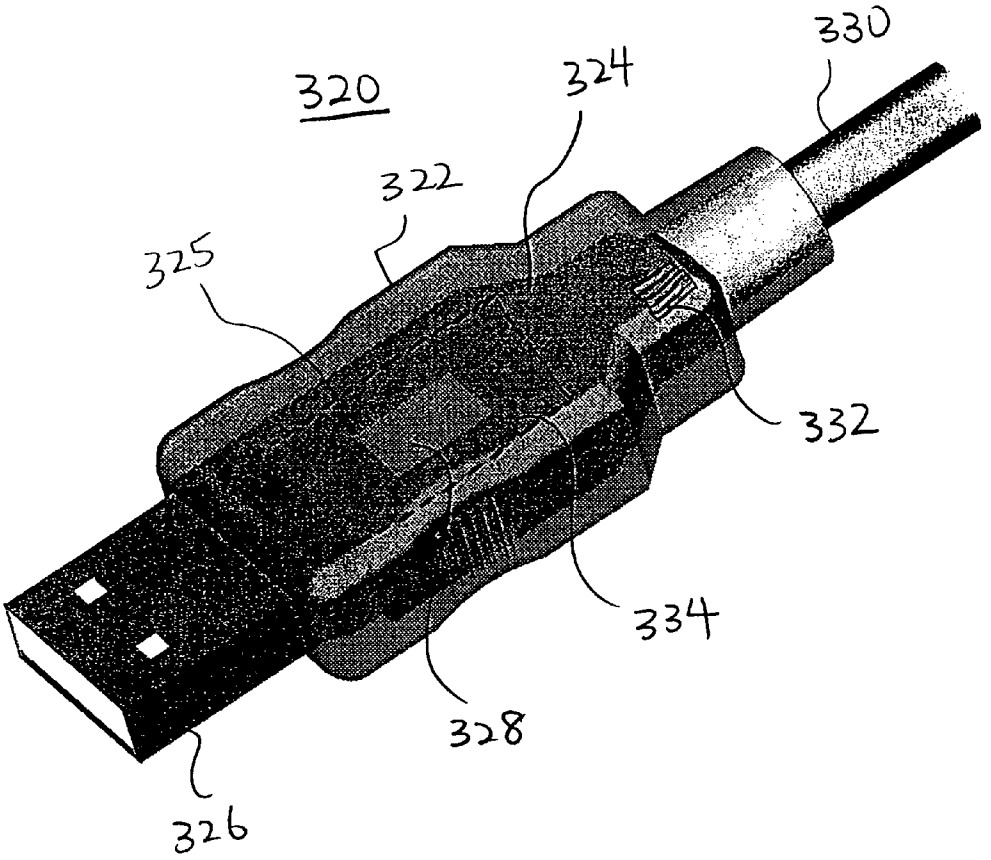

FIG. 8

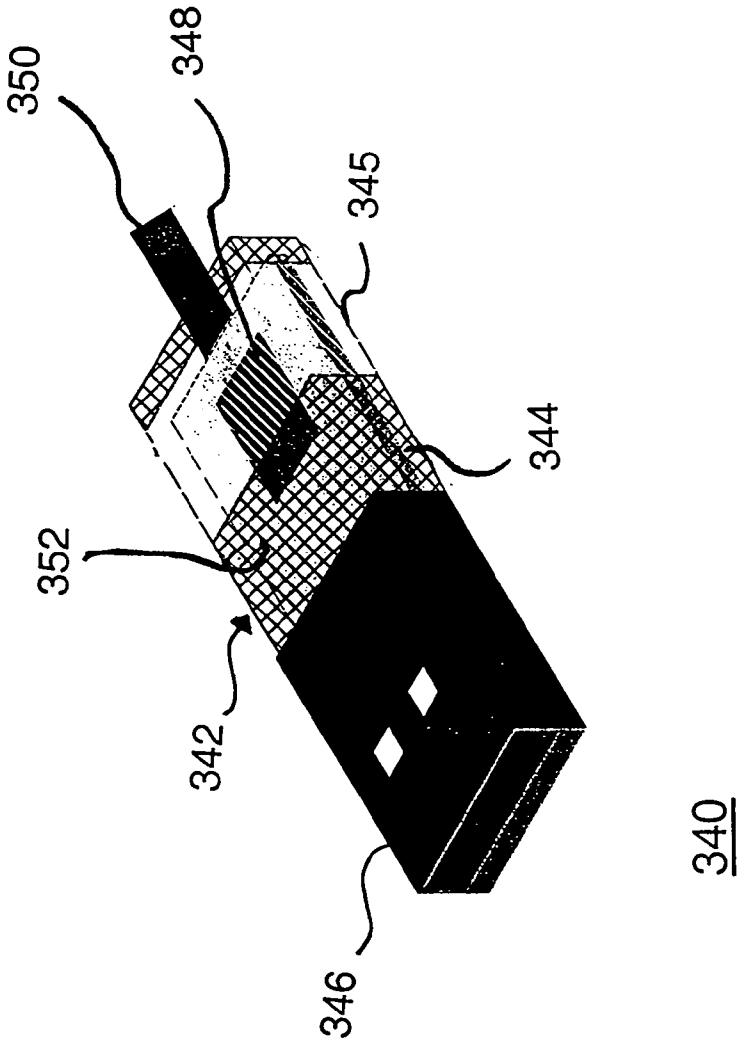

FIG. 9

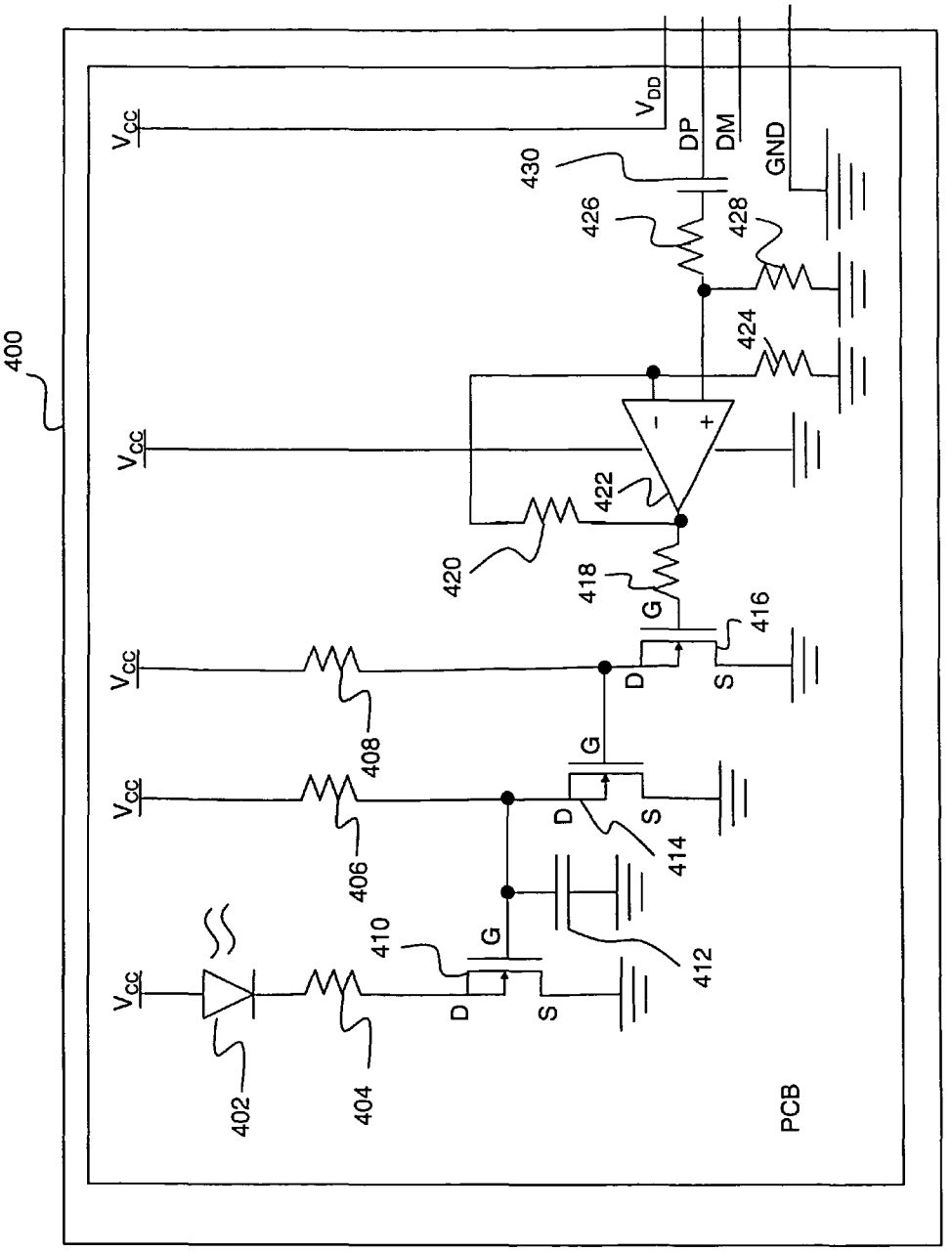
400
402
404
406
408
410
412
414
416
418
420
422
424
426
428
430
V_{CC}
V_{DD}
DP
DM
GND
D
G
S
PCB

FIG. 10

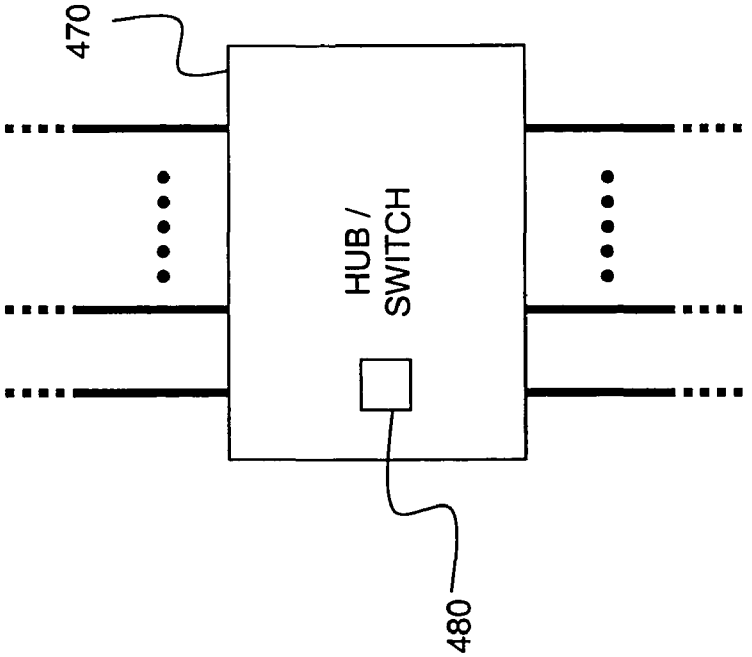

FIG. 12

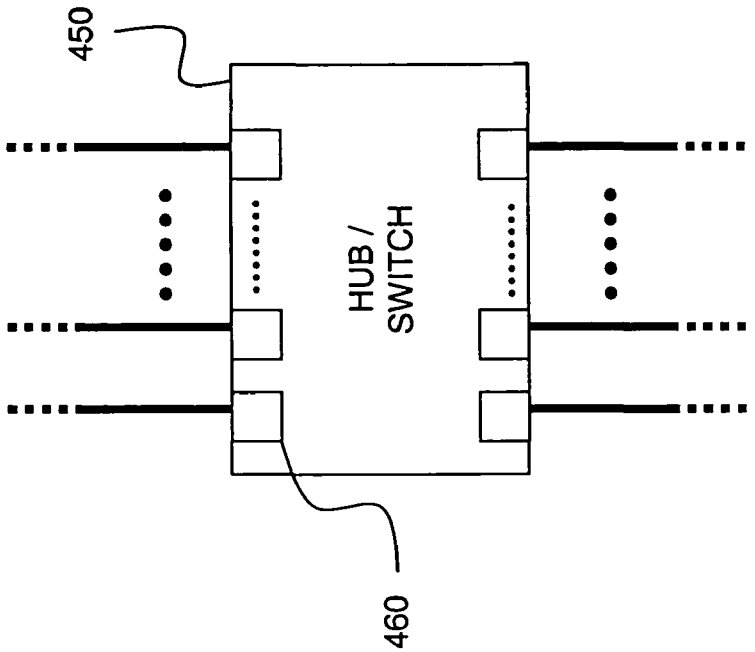

FIG. 11

CABLE TRAFFIC INDICATOR

CROSS-REFERENCE TO RELATED APPLICATION(S)

This application claims priority of U.S. Provisional Application No. 60/451,833 entitled "Cable Traffic Indicator" filed Mar. 4, 2003, the contents of which are fully incorporated by reference herein.

FIELD OF THE INVENTION

The present application relates generally to communication systems, and more particularly to an indicator for detecting traffic in a cable.

BACKGROUND

There typically is no way to visually monitor traffic or activity in parallel or serial cables. Hence, it is possible for a user to inadvertently interrupt data traffic by unplugging the cable while there is an on-going traffic in the cable. Further, there typically is no way of visually checking whether or not a port is functional. Therefore, it is desirable to provide an apparatus and method for visibly checking port status and/or traffic on a cable.

SUMMARY

In an exemplary embodiment according to the present invention, a cable capable of providing a visual indication of traffic is provided. The cable includes: one or more wires; and at least one connector connected to the wires, said connector having detection circuitry capable of detecting the traffic on the cable and generating a detection signal responsive to the traffic, and a traffic indicator coupled to the detection circuitry to provide the visual indication of the traffic responsive to the detection signal. The detection circuitry includes: driving circuitry coupled to at least one said wire, said at least one said wire carrying a data signal; and a transistor coupled to the driving circuitry and the traffic indicator, wherein the driving circuitry drives the transistor responsive to the data signal to generate the detection signal, which is used to drive the traffic indicator.

In another exemplary embodiment according to the present invention, an adapter for a cable having one or more wires to provide a visual indication of traffic on the cable is provided. The adapter includes: a first plug for interfacing with the cable; a second plug for interfacing between the first plug and an electronic device; and detection circuitry capable of detecting the traffic on the cable and generating a detection signal responsive to the traffic, and a traffic indicator coupled to the detection circuitry to provide the visual indication of the traffic responsive to the detection signal. The detection circuitry includes: driving circuitry coupled to at least one said wire in use, said at least one said wire carrying a data signal; and a transistor coupled to the driving circuitry and the traffic indicator, wherein the driving circuitry in use drives the transistor responsive to the data signal to generate the detection signal, which is used to drive the traffic indicator.

In yet another exemplary embodiment according to the present invention, a traffic detector that can detect traffic in a cable having one or more wires for connecting a computer to a peripheral device is provided. The traffic detector includes: detection circuitry capable of detecting electromagnetic radiation generated by the traffic in at least one of the wires, and of generating a detection signal in response; and a traffic indicator capable of receiving the detection signal, and of providing a visual indication of the traffic responsive to the detection signal.

In still another exemplary embodiment according to the present invention, hub/switch capable of providing a visual indication of traffic on at least one cable is provided. The hub/switch includes: detection circuitry capable of detecting the traffic on said at least one cable and generating a detection signal responsive to the traffic; and at least one traffic indicator coupled to the detection circuitry to provide the visual indication of the traffic responsive to the detection signal. The detection circuitry includes: driving circuitry coupled to at least one wire of said at least one cable, said at least one wire carrying a data signal; and a transistor coupled to the driving circuitry and said at least one traffic indicator, wherein the driving circuitry drives the transistor responsive to the data signal to generate the detection signal, which is used to drive said at least one traffic indicator.

These and other aspects of the invention will be more readily comprehended in view of the discussion herein and accompanying drawings, in which like reference numerals denote like elements.

BRIEF DESCRIPTION OF THE DRAWINGS

FIG. **1** is a system diagram of a computer and a peripheral device connected by a cable having a traffic indicator in an exemplary embodiment in accordance with aspects of the present invention;

FIG. **2** is a schematic diagram of a connector in an exemplary embodiment in accordance with aspects of the present invention;

FIG. **3** is a schematic diagram of a connector in another exemplary embodiment in accordance with aspects of the present invention;

FIG. **4** is a system diagram of a computer and a peripheral device connected over a cable and an adapter having traffic indicator in an exemplary embodiment in accordance with aspects of the present invention;

FIG. **5** is a system diagram of a computer and a peripheral device connected by a cable whose traffic is detected by a traffic detector in an exemplary embodiment in accordance with aspects of the present invention;

FIG. **6** is a schematic diagram of a connector in yet another exemplary embodiment in accordance with aspects of the present invention;

FIG. **7** is a perspective view of a cable connector according to an exemplary embodiment of the present invention;

FIG. **8** is a perspective view of a cable connector according to another exemplary embodiment of the present invention;

FIG. **9** is a perspective view of a cable connector according to yet another exemplary embodiment of the present invention;

FIG. **10** is a schematic diagram of a connector in still another exemplary embodiment in accordance with aspects of the present invention;

FIG. **11** is a hub/switch in an exemplary embodiment in accordance with aspects of the present invention; and

FIG. **12** is a hub/switch in another exemplary embodiment in accordance with aspects of the present invention.

DETAILED DESCRIPTION

FIG. **1** is a system diagram of a computer **102** and a peripheral device **104** connected by a cable **106** having

traffic indicators **110** and **111** in an exemplary embodiment in accordance with aspects of the present invention. The cable **106** is a parallel or serial communication cable, such as, a USB (Universal Serial Bus), FireWire, COM, LPT, SCSI cable or the like. The computer **102** is also coupled to a display device **100** (which may be a computer monitor, for example).

In the exemplary embodiment, the traffic indicator **110** is mounted on and integrated with a connector **108** of the cable **106**. Similarly, the traffic indicator **111** is mounted on and integrated with a connector **109** of the cable **106**. In other embodiments, the traffic indicators may be integrated with the cable at any point on the cable without being limited to the ends (i.e., at the connectors). The traffic indicators **110** and **111** provide a visual indication (e.g., light flashing) when there is traffic (or activity) in the cable **106**. The traffic may include video, audio (such as voice) and data traffic, and may be a high speed traffic (e.g., >10 Mb/s (Mega bits per second)).

In the exemplary embodiment, each of the traffic indicators **110** and **111** includes one or more light emitting diodes (LEDs) that flash in response to traffic in the cable. The LEDs may have red, yellow, green, blue or any other available colors. When the communication signals are running at high speeds (e.g., >10 Mb/s), the user may not be able to see the flashing taking place. Hence, the LEDs may also include one or more auto-flashing LEDs. This way, the LEDs may also be flashing to provide a clearer indication to the user during high speed communications. Other types of indicators may alternatively be used.

In the exemplary embodiment of FIG. **1**, a traffic indicator **120** (e.g., one or more LEDs) is mounted on the display device **100** so that it is easily visible to the user. The traffic indicator **120**, for example, is electrically connected to the connector **109** to receive a detection signal used to operate the traffic indicator **120**. The traffic indicator **120** may also be located at other visible locations.

The LED-based traffic indicators are desirable in low power applications since LEDs consume little power. However, in other embodiments, the traffic indicators may include other types of illuminating devices, such as, electroluminescent lamps, a translucent end of the cable (or connector), or the like. Translucent connector ends or translucent wire coverings would allow light to be dispersed within and appear, respectively, as though entire ends of a cable is glowing or the wire coverings are conducting the light. The translucent connector ends or the wire coverings may be clear or colored/tinted.

FIG. **1** illustrates an exemplary embodiment in which the traffic indicators **110** and **111** are on both the peripheral device side and the computer side, respectively of the cable. In other embodiments, the traffic indicator may be mounted on the connector on the computer side or the peripheral device side, but not on both sides. The traffic indicators in the exemplary embodiments generate a visual indication in response to traffic detected through monitoring data on at least one of the wires (that carries data) in the cable that are connected to pins of the connectors.

In addition to showing communications taking place on cables that normally do not have status indicator on them, and providing capabilities to visually check whether or not a port is functional, the traffic indicators in exemplary embodiments of the present invention add 'visual accent' to otherwise dull and plain cables, so as to make them aesthetically appealing to the users.

FIG. **2** is a schematic diagram of a connector **128** of a cable in an exemplary embodiment in accordance with aspects of the present invention. The schematic diagram of FIG. **2** is a simplified representation of a connector; in practice, of course, a connector would contain other components, such as pins, wires and the like. The circuitry illustrated on the schematic diagram of FIG. **2** is mounted on a printed circuit board (PCB), and may also be referred to as a filtering circuit or detection circuitry.

The connector **128**, for example, may be applied as the connector **108** and/or the connector **109** of FIG. **1**. The connector **128** has a traffic indicator in the form of an LED **130**. Hence, the LED **130** may correspond to the traffic indicator **110** and/or the traffic indicator **111**. If the cable carries power in one of its wires, the voltage source V_{DD} for the LED **130** may be provided by the power in the cable. For example, if the connector **128** is a USB connector, voltage source V_{DD} may be supplied by its power pin/wire. If power is not available in any of the wires, the V_{DD} may be supplied by an external battery/AC power. Further, in case of a USB cable, data received by the connector **128** may be a USB DP (Data +) signal. Here and elsewhere in this application, the term "data" is used broadly to include video, audio and/or other data. Further, the wire that carries data may be referred to as a data line.

In the connector **128**, the LED **130** is disposed between the voltage source V_{DD} and a resistor **132**. The other end of the resistor **132** is coupled to a drain of a transistor **134**, which is a field effect transistor (FET), such as NDS7002 available from Fairchild Semiconductor. In other embodiments, other types of suitable transistors may be used.

The transistor **134** detects (i.e., senses) the communications taking place on the data line without creating a significant signal drain on the line so as to attenuate the data signal. A source of the transistor **134** is coupled to ground. The data is received by an amplifier **141** in the connector **128** for amplification of the data signal. The amplifier **141**, for example, may be an operational amplifier (op-amp). The amplified data is then passed through a resistor **140** and a diode **138** to be applied at a gate of the transistor **134**. The gate of the transistor **134** is also coupled to ground via a resistor **142**. In other embodiments, the amplifier **141** may not be used, and the received data may be directly applied to the resistor **140**.

In operation, the data transitions between high and low, and thereby drives the transistor **134** at its gate. When the data signal is high, the transistor **134** turns on and conducts current. As the current flows through the transistor **134**, it flows through the LED **130** and the resistor **132**, voltage drop occurs across the LED **130**, and the LED **130** lights up. When the data signal is low, the transistor **134** turns off, and substantially no current flow through it or the LED **130**. Therefore, the LED does not light up. Hence, with the data transitioning between high and low, the LED turns on and off (or flashes) to indicate that there is traffic in the cable connected to the connector **128**. If there is no data signal, the LED **130** will not be activated and will not light up. In other embodiments, the LED **130** may flash (e.g., at a dimmer level) when there is no data signal.

FIG. **3** is a schematic diagram of a connector **158** of a cable in another exemplary embodiment in accordance with aspects of the present invention. The schematic diagram of FIG. **3** is a simplified representation of a connector; in practice, of course, a connector would contain other components, such as pins, wires and the like. The circuitry illustrated on the schematic diagram of FIG. **3** is mounted on a PCB, and may also be referred to as a filtering circuit or detection circuitry.

The connector **158**, for example, may be applied as the connector **108** and/or the connector **109** of FIG. **1**. The connector **158** has a traffic indicator in a form of LED **160**. Hence, the LED **160** may correspond to the traffic indicator **110** and/or the traffic indicator **111**. If the cable carries power in one of its wires, the voltage source V_{DD} for the LED **160** may be provided by the power in the cable. For example, if the connector **158** is a USB connector, voltage source V_{DD} may be supplied by its power pin/wire. If power is not available in any of the wires, the V_{DD} may be supplied by an external battery/AC power. Further, in case of a USB cable, data received by the connector **158** may be a USB DM (Data −) signal. The wire that carries data may be referred to as a data line.

In the connector **158**, the LED **160** is disposed between the voltage source V_{DD} and a resistor **162**. The other end of the resistor **162** is coupled to a drain of a transistor **164**, which is a FET, such as NDS7002 available from Fairchild Semiconductor. In other embodiments, other types of suitable transistors may be used.

A source of the transistor **164** is coupled to ground. The data is received by an amplifier **173** in the connector **158** for amplification of the data signal. The amplifier **173**, for example, may be an op-amp. The amplified data is then applied through a resistor **172** at a gate of a transistor **170**, which is also a FET, such as NDS7002. In other embodiments, the amplifier **173** may not be used, and the received data may be directly applied to the resistor **172**.

The transistor **170** detects (i.e., senses) the communications taking place on the data line without creating a significant signal drain on the line so as to attenuate the data signal. A source of the transistor **170** is coupled to ground, and a drain of the transistor **170** is coupled to V_{DD} via a resistor **168**. The drain is also coupled to a gate of the transistor **164** so as to drive it, and to ground via a capacitor **166**.

In operation, the data turns the transistor **170** on and off, which in turn, results in the transistor **164** being turned on and off. For example, when the data signal is high, the transistor **170** turns on, and pulls down the voltage (towards ground) at the gate of the transistor **164**, thereby turning it off. Hence, when the data signal is high, substantially no current flows in the LED **160**, and no light is generated.

When the data signal is low, the transistor **170** turns off, and its drain is pulled high (towards V_{DD}), thereby applying a high voltage at the gate of the transistor **164** so as to turn it on. Therefore, when the data signal is low, current flows through the LED **160**, and light is generated to indicate that there is traffic in the cable connected to the connector **158**. If there is no data signal, the LED **160** will not be activated and will not light up. In other embodiments, the LED **160** may flash (e.g., at a dimmer level) when there is no data signal.

FIG. **4** is a system diagram of a computer **102** and a peripheral device **104** connected by a cable **176**, an adapter **178** having a traffic indicator **180**, and an adapter **182** having a traffic indicator **184** in another exemplary embodiment in accordance with aspects of the present invention. The cable **176** is a standard cable having standard connectors **177** and **181** that meet parallel or serial communication standard, such as, USB (Universal Serial Bus), FireWire, COM, LPT, SCSI standard or the like. Use of the standard cable may be desirable in some cases over using the cable **106** having a traffic indicator of FIG. **1** because cost associated with acquiring new cables may be avoided if existing standard cables are used.

Instead of replacing the standard cable **176**, the adapter **178** is placed between the connector **177** on the cable **176** and the peripheral device **104**. Similarly, the adapter **182** is placed between the connector **181** on the cable **176** and the computer **102**. The adapters **178** and **182** may, for example, receive power from the cable to which it is connected. While the adapters are coupled to both ends of the cable **176** in the system illustrated in FIG. **4**, in practice, an adapter may be coupled to either end, but not both, of the cable to give a visual indication (e.g., light flashing) of traffic in the cable **176**.

The adapters **178** and **182** should each have a first plug that is capable of interfacing (e.g., electrically and physically coupling) with the cable **176** (through the connector **177** and the connector **181**, respectively) and a second plug that is capable of interfacing with a connector on the peripheral device **104** and the computer **102**, respectively.

The circuitry for detecting and visually indicating the data signal in the adapters **178** and **182**, for example, may be similar to the schematic diagram illustrated in the connector **128** of FIG. **2** and/or the connector **158** of FIG. **3**. For example, the signals between the connector **177** and the peripheral device **104** may pass through the adapter **178**. Similarly, the signal between the connector **181** and the computer **102** may pass through the adapter **182**.

The data signal at either or both ends of the cable, for example, may be coupled to adapter circuitry that is substantially the same as the circuitry illustrated in FIG. **2** and/or FIG. **3**. This way, the traffic indicator **180** and/or the traffic indicator **184** can visually indicate the traffic on the cable **176**. Here, the traffic indicators **180** and/or **184** may correspond to either the LED **130** of FIG. **2** or the LED **160** of FIG. **3**.

In the exemplary embodiment of FIG. **4**, a traffic indicator **120** (e.g., one or more LEDs) is mounted on the display device **100** so that it is easily visible to the user. The traffic indicator **120**, for example, is electrically connected to the adapter **182** to receive a detection signal used to operate the traffic indicator **120**. The traffic indicator **120** may also be located at other visible locations.

FIG. **5** is a system diagram of a computer **102** and a peripheral device **104** connected by the cable **176** whose traffic is detected by a traffic indicator **190** on a traffic detector **188** in an exemplary embodiment in accordance with aspects of the present invention. The traffic detector **188** may be formed at least partly from a flexible material that can wrap around the cable **176**. In the system diagram of FIG. **5**, the standard cable **176** is used without any adapter between the connector **177** and the peripheral device **104**. Of course, such adapter may also be used in addition to the traffic detector **188** if desired.

When there is traffic in the cable **176**, the signals in the cable generate electromagnetic radiation that can be detected by the traffic detector **188**. The traffic detector **188** may have detection circuitry therein for such detection of electromagnetic radiation. Such detection circuitry should generate a detection signal in response to traffic (or activity) in the cable **176**, and provide it to the traffic indicator **190**. In response, the traffic indicator **190** flashes in accordance with the level of the signals in the traffic. Detection of electromagnetic radiation is well known to those skilled in the art.

In the exemplary embodiment of FIG. **5**, a traffic indicator **120** (e.g., one or more LEDs) is mounted on the display device **100** so that it is easily visible to the user. The traffic indicator **120**, for example, is electrically connected to the traffic detector **188** to receive a detection signal used to

operate the traffic indicator **120**. The traffic indicator **120** may also be located at other visible locations.

FIG. **6** is a schematic diagram of a connector **200** of a cable in an exemplary embodiment in accordance with aspects of the present invention. The schematic diagram of FIG. **6** is a simplified representation of a connector; in practice, of course, a connector would contain other components, such as pins, wires and the like. The circuitry illustrated on the schematic diagram of FIG. **6** is mounted on a PCB, and may also be referred to as a filtering circuit or detection circuitry. The connector **200**, for example, may be a standard USB connector having pins for V_{DD}, DP, DM and GND, respectively.

The connector **200**, for example, may be applied as the connector **108** and/or the connector **109** of FIG. **1**. The schematic diagram of FIG. **6**, for example, may also be applied in an adapter for detecting and visually indicating traffic in the cable. For example, adapter circuitry for detecting and visually indicating traffic in the adapter **178** and/or the adapter **182** of FIG. **4** may be substantially the same as the circuitry of FIG. **6**.

The connector **200** has a traffic indicator in a form of LED **202**. Hence, the LED **202** may correspond to the traffic indicator **110** and/or the traffic indicator **111** of FIG. **1**. Further, when the circuitry of FIG. **6** is used in the adapter **178** and/or the adapter **182** of FIG. **4**, the LED **202** may correspond to the traffic indicator **180** and/or the traffic indicator **184** of FIG. **4**. If the cable carries power in one of its wires, the voltage source V_{DD} for the LED **202** may be provided by the power in the cable. For example, if the connector **200** is a USB connector, voltage source V_{DD} may be supplied by its power pin/wire. If power is not available in any of the wires, the V_{DD} may be supplied by an external battery/AC power. Further, in case of a USB cable, data received by the connector **200** may be a USB DP signal. The wire that carries data may be referred to as a data line.

In the connector **200**, the LED **202** is disposed between the voltage source V_{DD} and a resistor **204**. The other end of the resistor **204** is coupled to a collector of a transistor **210**, which is a bipolar transistor, such as 2N3904 NPN switching transistor available from Philips Semiconductors. An emitter of the transistor **210** is coupled to ground. The resistor **204**, for example, may have a value of 510 Ω or one of other suitable values. In other embodiments, other types of suitable transistors may be used.

The data is received by an amplifier **219** in the connector for amplification of the data signal. The amplifier **219**, for example, may be an op-amp. The amplified data is then applied through a resistor **218** at a base of a transistor, such as N3904. In other embodiments, the amplifier **219** may not be used and the received data may be directly applied to resistor **218**.

The transistor **216** detects (i.e., senses) the communications taking place on the data line without creating a significant signal drain on the line so as to attenuate the data signal. An emitter of the transistor **216** is coupled to ground, and a collector of the transistor **216** is coupled to V_{DD} via a resistor **208**. For example, the resistors **218** and **208** may have values of 5.1KΩ and 10KΩ, respectively. These resistors may also have other suitable values.

The collector of the transistor **216** is also coupled to a base of a transistor **214** so as to drive it. The transistor **214** is also a bipolar transistor, such as 2N3904. A collector of the transistor **214** is coupled to V_{DD} through a resistor **206**, which for example, may have a value of 10KΩ. The resistor **206** may also have one of other suitable values. The collector of the transistor **214** is also coupled to a base of the transistor **210** and also to a capacitor **212**, which for example may have a value of 1000 pico farad (pF) or any other suitable value. The other side of the capacitor **212** is coupled to ground. Further, an emitter of the transistor **214** is coupled to ground.

In operation, the DP signal turns the transistor **216** on and off, which in turn, results in the transistor **214** being turned on and off. For example, when the data signal is high, the transistor **216** turns on, and pulls down the voltage (towards ground) at the base of the transistor **214**, thereby turning it off. When the transistor **214** is in an off-state, the base of the transistor **210** is pulled high, thereby turning on the transistor **210**. Hence, when the data signal is high, current flows through the LED **202**, and light is generated to indicate that there is traffic in the cable connected to the connector **200**.

When the data signal is low, the transistor **216** turns off, and its collector is pulled high (towards V_{DD}), thereby applying a high voltage at the base of the transistor **214** so as to turn it on. When the transistor **214** is in an on-state, current flows through the resistor **206**, thereby lowering voltage at the collector of the transistor **214**. When the voltage at the collector of the transistor **214** is lowered, the voltage applied at the base of the transistor **210** is lowered also, thereby turning the transistor **210** off. Therefore, when the data signal is low, current does not flow through the LED **202**, and light is not generated. If there is no data signal, the LED **202** will not be activated and will not light up. In other embodiments, the LED **202** may flash (e.g., at a dimmer level) when there is no data signal.

The transistors in FIG. **6** are illustrated as NPN bipolar transistors. In other embodiments, the transistors may be PNP bipolar transistors or any other suitable transistors.

FIG. **7** is a perspective view of a cable connector **300** according to an exemplary embodiment of the present invention. The connector **300** includes a generally rectangular shaped socket **306**, which is configured as a female connector. The socket **306** interfaces with a printed circuit board (PCB) **314** (shown as a box with dotted lines), which is adjacent to and coupled to the socket **306**. The PCB **314** has mounted thereon an LED **308**. The PCB **314** also has mounted thereon circuitry (not shown; e.g., detection circuitry of FIG. **2**, **3** or **6**) for sensing the data traffic on a cable **310**, and also for lighting the LED **308** when there is traffic on the cable **310**. The circuitry on the PCB **314** is also coupled to wires **312** of the cable **310**. The LED **308** may be a flashing LED or any other type of LED.

The connector **300** includes an outer casing **302** and a generally rectangular shaped inner casing **304**. The inner casing **304** has a tapered end on the side of the cable **310**. The inner casing **304** is first used to encase the PCB **314**. Since the LED **308** is mounted on the PCB **314**, an opening **305** is formed on the inner casing **304** to allow the visible light to exit through the opening. In other embodiments, the opening **305** may be covered with a transparent or semi-transparent material. In still other embodiments, the inner casing may be made of a transparent or semi-transparent material such that the opening is not needed to allow the visible light to exit the inner casing.

The outer casing **302** is made of a transparent or semi-transparent material such that the light generated by the LED **308** can be seen through the outer casing **302**. By encasing the PCB **314** in the inner casing **304** and by enveloping both the inner casing **304** and a portion of the socket **306** using the outer casing **302**, a cable connector having a sturdy design is provided.

FIG. **8** is a perspective view of a cable connector **320** according to another exemplary embodiment of the present invention. The connector **320** is similar to the connector **300**

of FIG. **7**, except that the connector **320** includes a generally rectangular shaped plug **326**, which is configured as a male connector. The plug **326** interfaces with a printed circuit board (PCB) **334** (shown as a box with dotted lines), which is adjacent to and connected to the plug **326**. The PCB **334** has mounted thereon an LED **328**. The PCB **334** also has mounted thereon circuitry (not shown; e.g., detection circuitry of FIG. **2**, **3** or **6**) for sensing the data traffic on a cable **330**, and also for lighting the LED **328** when there is traffic on the cable **330**. The circuitry on the PCB **334** is also coupled to wires **332** of the cable **330**. The LED **328** may be a flashing LED or any other type of LED.

The connector **320** includes an outer casing **322** and a generally rectangular shaped inner casing **324**. The inner casing **324** has a tapered end on the side of the cable **330**. The inner casing **324** is first used to encase the PCB **334**. Since the LED **328** is mounted on the PCB **334**, an opening **325** is formed on the inner casing **324** to allow the visible light to exit through the opening. In other embodiments, the opening **325** may be covered with a transparent or semi-transparent material. In still other embodiments, the inner casing may be made of a transparent or semi-transparent material such that the opening is not needed to allow the visible light to exit the inner casing.

The outer casing **322** is made of a transparent or semi-transparent material such that the light generated by the LED **328** can be seen through the outer casing **322**. By encasing the PCB **334** in the inner casing **324** and by enveloping both the inner casing **324** and a portion of the socket **326** using the outer casing **322**, a cable connector having a sturdy design is provided.

FIG. **9** is a perspective view of a cable connector **340** according to yet another exemplary embodiment of the present invention. The connector **340** includes a plug **346**, which is configured as a male connector. The plug **346** interfaces with a printed circuit board (PCB) **352**, which is adjacent to and coupled to the plug **346**. The PCB **352** has mounted thereon an LED **348**. The PCB **352** also has mounted thereon circuitry (not shown; e.g., detection circuitry of FIG. **2**, **3** or **6**) for sensing the data traffic on a cable **350**, and also for lighting the LED **348** when there is traffic on the cable **350**. The circuitry on the PCB **352** is also coupled to wires of the cable **350**. The LED **348** may be a flashing LED or any other type of LED.

The connector **340** includes a generally rectangular shaped casing **342**, which has a first section **345** around the LED **348** and a second section **344**. The first section **345** is either transparent or semi-transparent, and allows the light generated by the LED **348** to exit the casing **342**. The second section **344** surrounds the first section **345**, and is transparent, semi-transparent, or transparent with texture. The casing **342**, for example, may be used as an inner casing for the connector of FIG. **7** and/or FIG. **8**.

FIG. **10** is a schematic diagram of a connector **400** in still another exemplary embodiment in accordance with aspects of the present invention. The connector **400** of FIG. **10** is similar to the connector **200** of FIG. **6**, except that the connector **400** has FETs **410**, **414** and **416** instead of the NPN bipolar transistors **210**, **214** and **216** in the connector **200** of FIG. **6**. The FETs **410**, **414** and **416**, for example, may be 2N7002 N-Channel Enhancement-Mode Vertical DMOS FETs available from Supertex Inc.

The FET **410** is coupled via an LED **402** and a resistor **404** (e.g., 510 Ω) to Vcc. The FETs **414** and **416** are coupled via resistors **406** (e.g., 10 kΩ) and **408** (e.g., 10 kΩ), respectively, to Vcc. A gate of the transistor **414** is coupled to a node between the resistor **408** and the FET **416**. A capacitor **412** (e.g., 1000 pF/25V) is coupled between a gate of the FET **410** and ground, and to a node between the resistor **406** and the FET **414**. A gate of the transistor **416** is coupled via a resistor **418** (e.g., 5.1 kΩ) to an op-amp **422**. The op-amp **422**, for example, may be LM358 low power dual op-amp available from National Semiconductor. In other embodiments, other types of transistors and/or an op-amp may be used. Also, various different suitable values may be used for the discrete components, such as the resistors and capacitors as those skilled in the art would appreciate.

The positive data signal (DP) is received by the connector **400** and applied through a capacitor **430** (e.g., 0.1μ F/25V) at a resistor **426** (e.g., 2.4 kΩ). The capacitor **430**, hence, operates as a high pass filter to filter out low frequency. The other end of the resistor **426** is coupled to ground via a resistor **428** (e.g., 1 MΩ), and also applied at a positive input of the op-amp **422**. An output of the op-amp **422** is fed back via a resistor **420** (e.g., 1 MΩ) into its negative input. The negative input is also coupled to ground via a resistor **424** (e.g., 10 kΩ).

The circuitry of the connector **400**, for example, may be applied to the connectors **108**, **109** of FIG. **1**, the adapters **178**, **182** of FIG. **4** and/or the traffic detector **188** of FIG. **5**.

FIGS. **11** and **12** are two exemplary embodiments of a hub or a switch in accordance with aspects of the present invention. To the hub/switch **450** and the hub/switch **470** of FIGS. **11** and **12**, a number of USB, FireWire and/or other types of cables may be connected. These cables may also be connected at the other end to various different computers, peripheral devices, and the like, for exchanging data with one or more other connected devices via the hub/switch **450** or **470**.

The hub/switch **460** includes a plurality of detection circuitry/traffic indicators **460**, one per cable. However, the hub/switch **470** includes only one detection circuitry/traffic indicator **480**. For example, the cables connected to the hub/switch **470** may be coupled in series and/or chained such that only one detection circuitry/traffic indicator may be sufficient. In other embodiments, the number of detection circuitry/traffic indicators may be more than one but less than the total number of connected cables. The detection circuitry/traffic indicators **460** or **480** may be the same as or similar to the circuitry of FIGS. **2**, **3**, **6** and/or **10**.

It will be appreciated by those of ordinary skill in the art that the invention can be embodied in other specific forms without departing from the spirit or essential character thereof. The present description is therefore considered in all respects to be illustrative and not restrictive, the scope of the invention to be determined by the appended claims and their equivalents.

The invention claimed is:

1. A cable capable of providing a visual indication of traffic, said cable comprising:

one or more wires; and

at least one connector connected to the wires, said connector having detection circuitry capable of detecting the traffic on the cable and generating a detection signal responsive to the traffic, and a traffic indicator coupled to the detection circuitry to provide the visual indication of the traffic responsive to the detection signal,

said detection circuitry comprising:

driving circuitry coupled to at least one said wire, said at least one said wire carrying a data signal; and

a transistor coupled to the driving circuitry and the traffic indicator,

wherein the driving circuitry drives the transistor responsive to the data signal to generate the detection signal, which is used to drive the traffic indicator, and

wherein the driving circuitry comprises:

a driving transistor having a first electrode, a second electrode and a third electrode,

wherein the first electrode is coupled to said at least one data signal carrying wire, the second electrode is coupled to power and a gate of the transistor, and the third electrode is coupled to ground, and

wherein the transistor turns on when the driving transistor turns off, and the transistor turns off when the driving transistor turns on, thereby generating the detection signal.

2. The cable of claim **1**, wherein said cable is selected from a group consisting of USB, FireWire, COM, LPT and SCSI cables.

3. The cable of claim **1**, wherein the traffic indicator comprises one selected from a group consisting of a light emitting diode (LED), an electro-luminescent lamp, a translucent connector end and a translucent wire covering.

4. The cable of claim **1**, wherein at least one of the wires carries power, and the traffic indicator receives power from said at least one of the wires that carries power.

5. The cable of claim **1**, wherein the driving circuitry comprises a diode.

6. The cable of claim **1**, wherein said at least one connector comprises an inner casing, an outer casing and a plug, wherein the inner casing at least partially envelopes the detection circuitry, the outer casing at least partially envelopes the inner casing, and the plug is coupled to said one or more wires and the detection circuitry.

7. The cable of claim **6**, wherein the inner casing has an opening formed thereon for allowing light generated by the traffic indicator to exit the inner casing.

8. The cable of claim **6**, wherein at least a portion of at least one of the inner casing and the outer casing is either transparent or semi-transparent to allow at least a portion of light generated by the traffic indicator to exit the connector.

9. The cable of claim **1**, wherein the driving circuitry comprises ail amplifier for amplifying the data signal.

10. A cable capable of providing a visual indication of traffic, said cable comprising:

one or more wires; and

at least one connector connected to the wires, said connector having detection circuitry capable of detecting the traffic on the cable and generating a detection signal responsive to the traffic, and a traffic indicator coupled to the detection circuitry to provide the visual indication of the traffic responsive to the detection signal,

said detection circuitry comprising:

driving circuitry coupled to at least one said wire, said at least one said wire carrying a data signal; and

a transistor coupled to the driving circuitry and the traffic indicator,

wherein the driving circuitry drives the transistor responsive to the data signal to generate the detection signal, which is used to drive the traffic indicator, and wherein the driving circuitry comprises:

first and second driving transistors, each having a first electrode, a second electrode and a third electrode,

wherein for the first driving transistor, the first electrode is coupled to said at least one data signal carrying wire, the second electrode is coupled to power, and the third electrode is coupled to ground,

wherein for the second driving transistor, the first electrode is coupled to the second electrode of the first transistor, the second electrode is coupled to power and a gate of the transistor, and the third electrode is coupled to ground, and

wherein the transistor turns on when the first driving transistor turns on, and the transistor turns off when the first driving transistor turns off, thereby generating the detection signal.

11. An adapter for a cable having one or more wires to provide a visual indication of traffic on the cable, said adapter comprising:

a first plug for interfacing with the cable;

a second plug for interfacing between the first plug and an electronic device: and

detection circuitry capable of detecting the traffic on the cable and generating a detection signal responsive to the traffic, and a traffic indicator coupled Lo the detection circuitry to provide the visual indication of the traffic responsive to the detection signal,

said detection circuitry comprising:

driving circuitry coupled to at least one said wire in use, said at least one said wire carrying a data signal; and

a transistor coupled to the driving circuitry and the traffic indicator,

wherein the driving circuitry in use drives the transistor responsive to the data signal to generate the detection signal, which is used to drive the traffic indicator,

wherein at least one of the wires carries power, and the traffic indicator in use receives power from said at least one wire that carries power, and

wherein the driving circuitry comprises

a driving transistor having a first gate, a second gate and a third gate,

wherein, in use, the first gate is coupled to said at least one data signal carrying wire, the second gate is coupled to power and a gate of the transistor, and the third gate is coupled to ground, and

wherein, in use, the transistor turns on when the driving transistor turns off, and the transistor turns off when the driving transistor turns on, thereby generating the detection signal.

12. The adapter of claim **11**, wherein said adapter is capable of interfacing with a cable selected from a group consisting of USB, FireWire, COM, LPT and SCSI cables.

13. The adapter of claim **11**, wherein the traffic indicator comprises one selected from a group consisting of a light emitting diode (LED), an electro-luminescent lamp, a translucent connector end and a translucent wire covering.

14. The adapter of claim **11**, wherein the driving circuitry comprises a diode.

15. The adapter of claim **11**, wherein the driving circuitry comprises an amplifier for amplifying the data signal.

16. An adapter for a cable having one or more wires to provide a visual indication of traffic on the cable, said adapter comprising:

a first plug for interfacing with the cable;

a second plug for interfacing between the first plug and an electronic device; and

detection circuitry capable of detecting the traffic on the cable and generating a detection signal responsive to the traffic, and a traffic indicator coupled to the detection circuitry to provide the visual indication of the traffic responsive to the detection signal,

said detection circuitry comprising:

driving circuitry coupled to at least one said wire in use, said at least one said wire carrying a data signal; and

a transistor coupled to the driving circuitry and the traffic indicator,

wherein the driving circuitry in use drives the transistor responsive to the data signal to generate the detection signal, which is used to drive the traffic indicator, and

wherein the driving circuitry comprises:

first and second driving transistors, each having a first electrode, a second electrode and a third electrode,

wherein, in use, for the first driving transistor, the first electrode is coupled to said at least on data signal carrying wire, the second electrode is coupled to power, and the third electrode is coupled to ground,

wherein, in use, for the second driving transistor, the first electrode is coupled to the second electrode of the first transistor, the second electrode is coupled to power and a gate of the transistor, and the third electrode is coupled to ground, and

wherein, in use, the transistor turns on when the first driving transistor turns on, and the transistor turns off when the first driving transistor turns off, thereby generating the detection signal.

* * * * *

UNITED STATES PATENT AND TRADEMARK OFFICE

CERTIFICATE OF CORRECTION

PATENT NO. : 7,019,658 B1
APPLICATION NO. : 10/677994
DATED : March 28, 2006
INVENTOR(S) : Erickson et al.

It is certified that error appears in the above-identified patent and that said Letters Patent is hereby corrected as shown below:

In the Claims

Column 11, line 41, Claim 9	Delete "ail", Insert --an--
Column 12, line 13, Claim 11	Delete "device:", Insert --device;--
Column 12, line 16, Claim 11	Delete "coupled Lo", Insert --coupled to--
Column 12, line 30, Claim 11	Delete "comprises", Insert --comprises:--
Column 13, line 10, Claim 16	Delete "least on", Insert --least one--

Signed and Sealed this

Twentieth Day of March, 2007

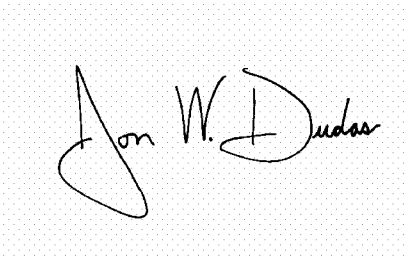

JON W. DUDAS
Director of the United States Patent and Trademark Office