US009007015B1

(12) **United States Patent**
Nook et al.

(10) **Patent No.: US 9,007,015 B1**
(45) **Date of Patent: Apr. 14, 2015**

(54) **PORTABLE VEHICLE BATTERY JUMP START APPARATUS WITH SAFETY PROTECTION**

(71) Applicant: **The NOCO Company**, Glenwillow, OH (US)

(72) Inventors: **Jonathan Lewis Nook**, Gates Mills, OH (US); **William Knight Nook**, Shaker Heights, OH (US); **James Richard Stanfield**, Peoria, AZ (US); **Derek Michael Underhill**, Chandler, AZ (US)

(73) Assignee: **The NOCO Company**, Glenwillow, OH (US)

(*) Notice: Subject to any disclaimer, the term of this patent is extended or adjusted under 35 U.S.C. 154(b) by 0 days.

(21) Appl. No.: **14/325,938**

(22) Filed: **Jul. 8, 2014**

Related U.S. Application Data

(63) Continuation of application No. PCT/US2014/045434, filed on Jul. 3, 2014.

(51) **Int. Cl.**

H02J 7/14	(2006.01)
H02J 7/00	(2006.01)
H02J 7/04	(2006.01)
H02J 1/00	(2006.01)

(52) **U.S. Cl.**
CPC ***H02J 7/0054*** (2013.01); ***H02J 7/0034*** (2013.01); ***H02J 7/0029*** (2013.01); *H02J 2001/006* (2013.01)

(58) **Field of Classification Search**
CPC H02J 7/0034; H02J 7/0054; H02J 7/0042; H02J 2001/006; Y02E 60/12
USPC 320/105, 165; 307/150
See application file for complete search history.

(56) **References Cited**

U.S. PATENT DOCUMENTS

4,885,524	A	*	12/1989	Wilburn	320/105
5,083,076	A	*	1/1992	Scott	320/105
5,111,130	A		5/1992	Bates	

(Continued)

FOREIGN PATENT DOCUMENTS

WO	2004036714	A2	4/2004
WO	2013-137873	A1	9/2013

OTHER PUBLICATIONS

International Search Report in corresponding PCT/US2014/045434, Nov. 3, 2014.

Primary Examiner — M'Baye Diao
(74) *Attorney, Agent, or Firm* — Vorys, Sater, Seymour and Pease LLP; Vincent M DeLuca

(57) **ABSTRACT**

A handheld device for jump starting a vehicle engine includes a rechargeable lithium ion battery pack and a microcontroller. The lithium ion battery is coupled to a power output port of the device through a FET smart switch actuated by the microcontroller. A vehicle battery isolation sensor connected in circuit with positive and negative polarity outputs detects the presence of a vehicle battery connected between the positive and negative polarity outputs. A reverse polarity sensor connected in circuit with the positive and negative polarity outputs detects the polarity of a vehicle battery connected between the positive and negative polarity outputs, such that the microcontroller will enable power to be delivered from the lithium ion power pack to the output port only when a good battery is connected to the output port and only when the battery is connected with proper polarity of positive and negative terminals.

23 Claims, 13 Drawing Sheets

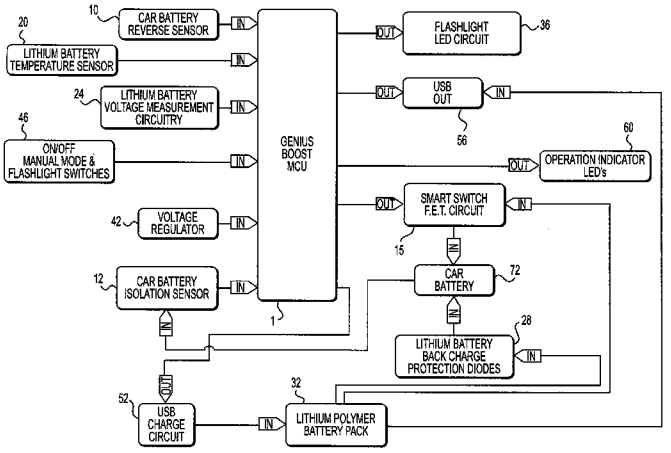

(56) **References Cited**

U.S. PATENT DOCUMENTS

5,189,359	A	2/1993	Kronberg	
5,635,817	A	6/1997	Shiska	
5,635,818	A	6/1997	Quintero	
5,793,185	A	8/1998	Prelec et al.	
5,795,182	A	8/1998	Jacob	
5,921,809	A	7/1999	Fink	
5,965,998	A *	10/1999	Whiting et al.	320/165
6,130,519	A *	10/2000	Whiting et al.	320/105
6,140,796	A	10/2000	Martin et al.	
6,212,054	B1	4/2001	Chan	
6,262,492	B1	7/2001	Sheng	
6,262,559	B1 *	7/2001	Eggert et al.	320/103
6,362,599	B1	3/2002	Turner et al.	
6,632,103	B1	10/2003	Liu	
6,756,764	B2	6/2004	Smith et al.	
6,803,743	B2	10/2004	George et al.	
7,148,580	B2	12/2006	Sodemann et al.	
7,301,303	B1	11/2007	Hulden	
7,872,361	B2	1/2011	McFadden	
8,172,603	B1 *	5/2012	Richardet, Jr.	439/504
8,199,024	B2	6/2012	Baxter et al.	
8,376,775	B2	2/2013	Rinehardt	
8,493,021	B2	7/2013	Richardson et al.	
2002/0041174	A1	4/2002	Purkey	
2004/0130298	A1	7/2004	Krieger et al.	
2005/0040788	A1 *	2/2005	Tseng	320/111
2005/0110467	A1	5/2005	Thomason	
2005/0252573	A1 *	11/2005	Montani	141/98
2007/0285049	A1 *	12/2007	Krieger et al.	320/105
2010/0301800	A1	12/2010	Inskeep	
2012/0091944	A1 *	4/2012	Rogers	320/105
2013/0154543	A1	6/2013	Richardson et al.	
2013/0314041	A1 *	11/2013	Proebstle	320/109
2014/0159509	A1	6/2014	Inskeep	

* cited by examiner

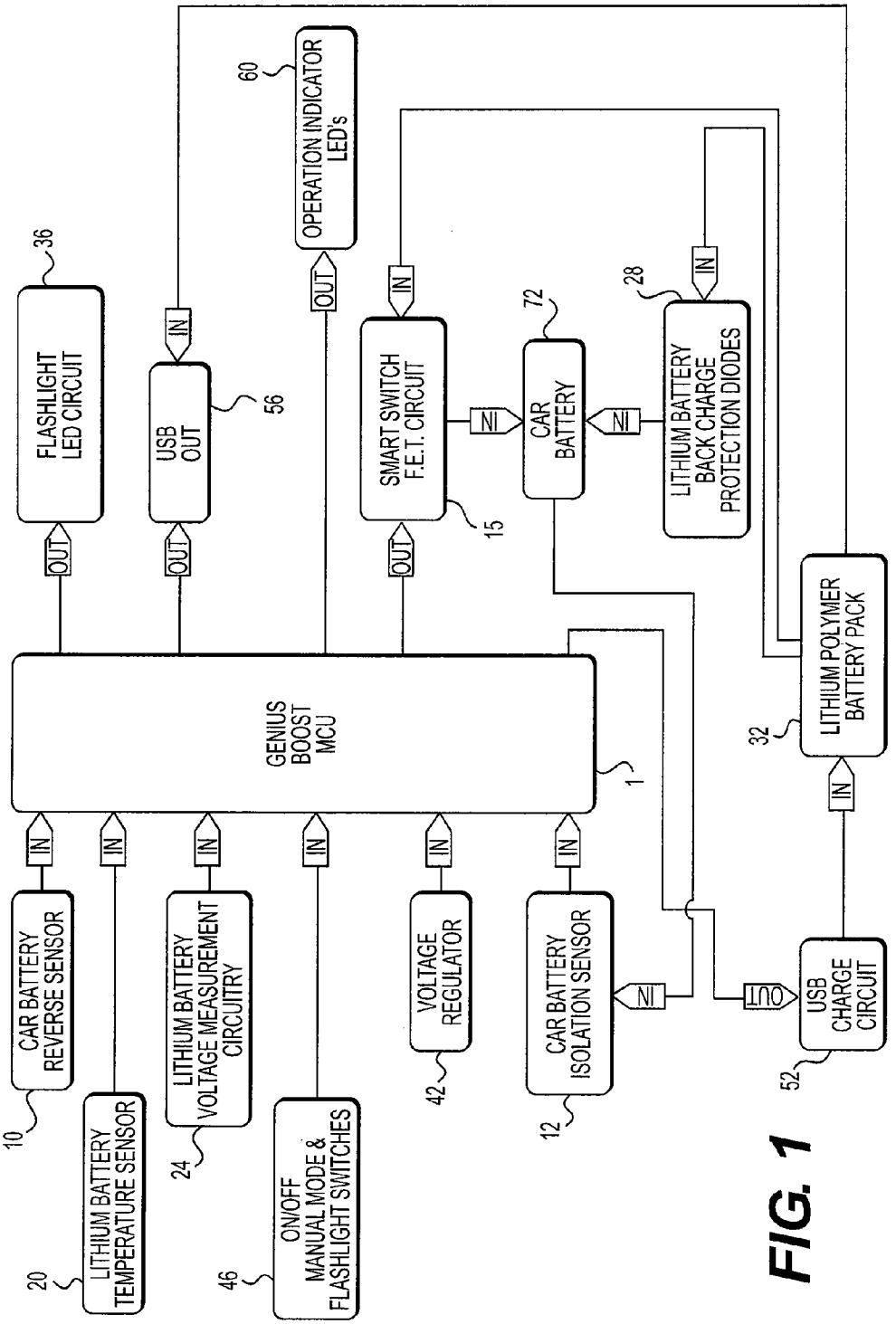
GENIUS BOOST MCU
1
FLASHLIGHT LED CIRCUIT
36
USB OUT
56
OPERATION INDICATOR LED's
60
SMART SWITCH F.E.T. CIRCUIT
15
CAR BATTERY
72
LITHIUM BATTERY BACK CHARGE PROTECTION DIODES
28
LITHIUM POLYMER BATTERY PACK
32
USB CHARGE CIRCUIT
52
CAR BATTERY ISOLATION SENSOR
12
VOLTAGE REGULATOR
42
LITHIUM BATTERY VOLTAGE MEASUREMENT CIRCUITRY
24
ON/OFF MANUAL MODE & FLASHLIGHT SWITCHES
46
CAR BATTERY REVERSE SENSOR
10
LITHIUM BATTERY TEMPERATURE SENSOR
20
IN
OUT

FIG. 1

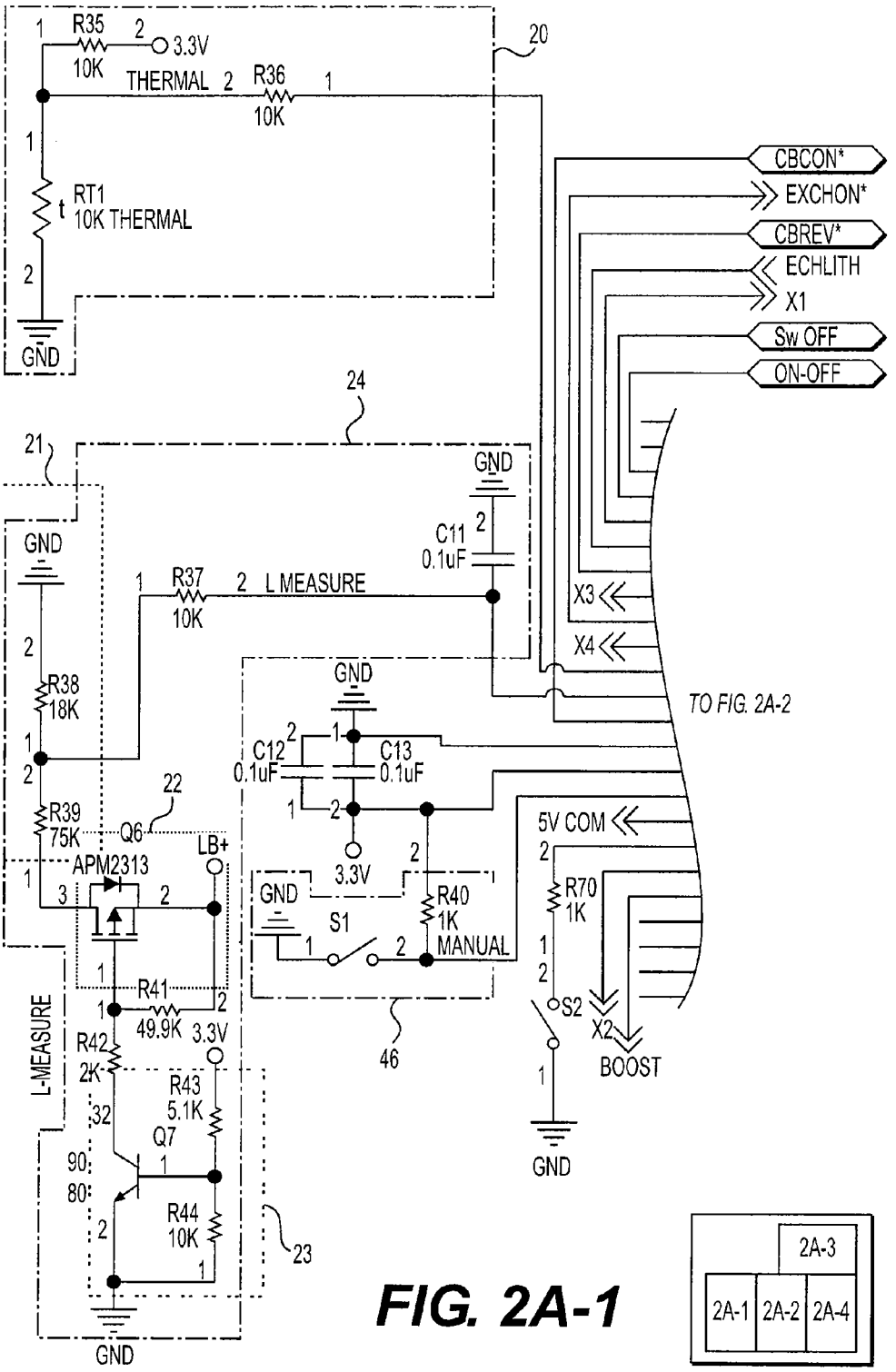
R35
10K
3.3V
THERMAL
R36
10K
20
RT1
10K THERMAL
GND
CBCON*
EXCHON*
CBREV*
ECHLITH
X1
Sw OFF
ON-OFF
24
21
GND
C11
0.1uF
R37
10K
L MEASURE
X3
X4
R38
18K
TO FIG. 2A-2
C12
0.1uF
C13
0.1uF
22
R39
75K
Q6
APM2313
LB+
3.3V
5V COM
R70
1K
R40
1K
MANUAL
S1
S2
X2
BOOST
R41
49.9K
R42
2K
R43
5.1K
Q7
R44
10K
L-MEASURE
46
23

FIG. 2A-1

2A-3
2A-1
2A-2
2A-4

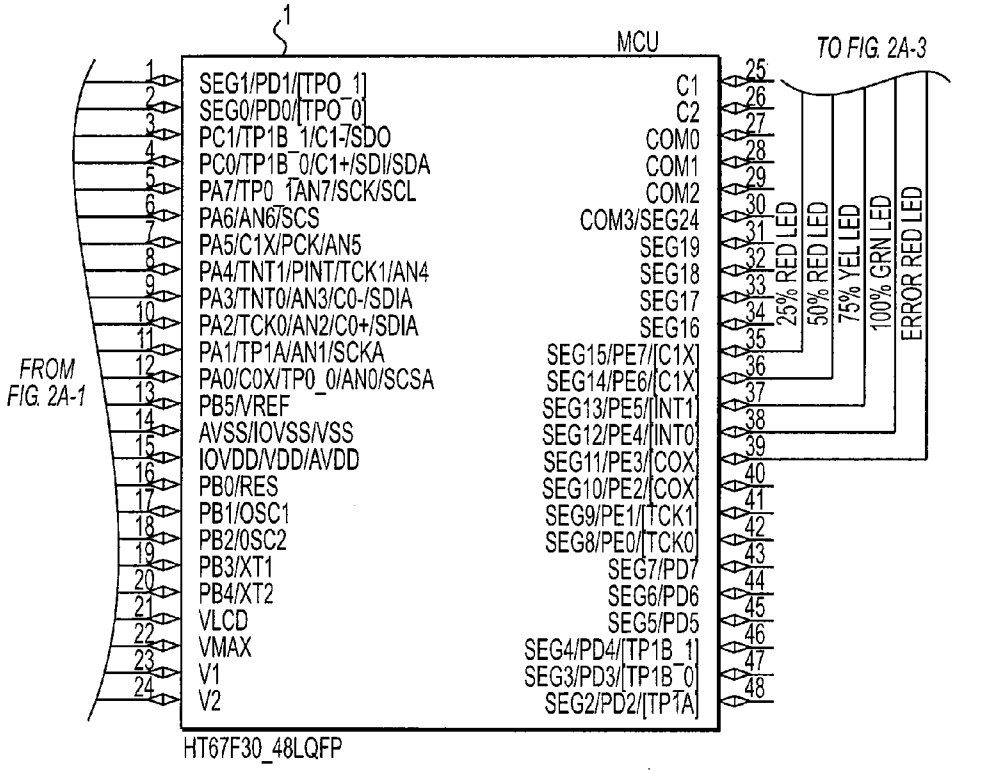
1
MCU
TO FIG. 2A-3
FROM FIG. 2A-1
SEG1/PD1/[TPO_1]
SEG0/PD0/[TPO_0]
PC1/TP1B_1/C1-/SDO
PC0/TP1B_0/C1+/SDI/SDA
PA7/TP0_1AN7/SCK/SCL
PA6/AN6/SCS
PA5/C1X/PCK/AN5
PA4/TNT1/PINT/TCK1/AN4
PA3/TNT0/AN3/C0-/SDIA
PA2/TCK0/AN2/C0+/SDIA
PA1/TP1A/AN1/SCKA
PA0/C0X/TP0_0/AN0/SCSA
PB5/VREF
AVSS/IOVSS/VSS
IOVDD/VDD/AVDD
PB0/RES
PB1/OSC1
PB2/OSC2
PB3/XT1
PB4/XT2
VLCD
VMAX
V1
V2
C1
C2
COM0
COM1
COM2
COM3/SEG24
SEG19
SEG18
SEG17
SEG16
SEG15/PE7/[C1X]
SEG14/PE6/[C1X]
SEG13/PE5/[INT1]
SEG12/PE4/[INT0]
SEG11/PE3/[COX]
SEG10/PE2/[COX]
SEG9/PE1/[TCK1]
SEG8/PE0/[TCK0]
SEG7/PD7
SEG6/PD6
SEG5/PD5
SEG4/PD4/[TP1B_1]
SEG3/PD3/[TP1B_0]
SEG2/PD2/[TP1A]
25% RED LED
50% RED LED
75% YEL LED
100% GRN LED
ERROR RED LED
HT67F30_48LQFP

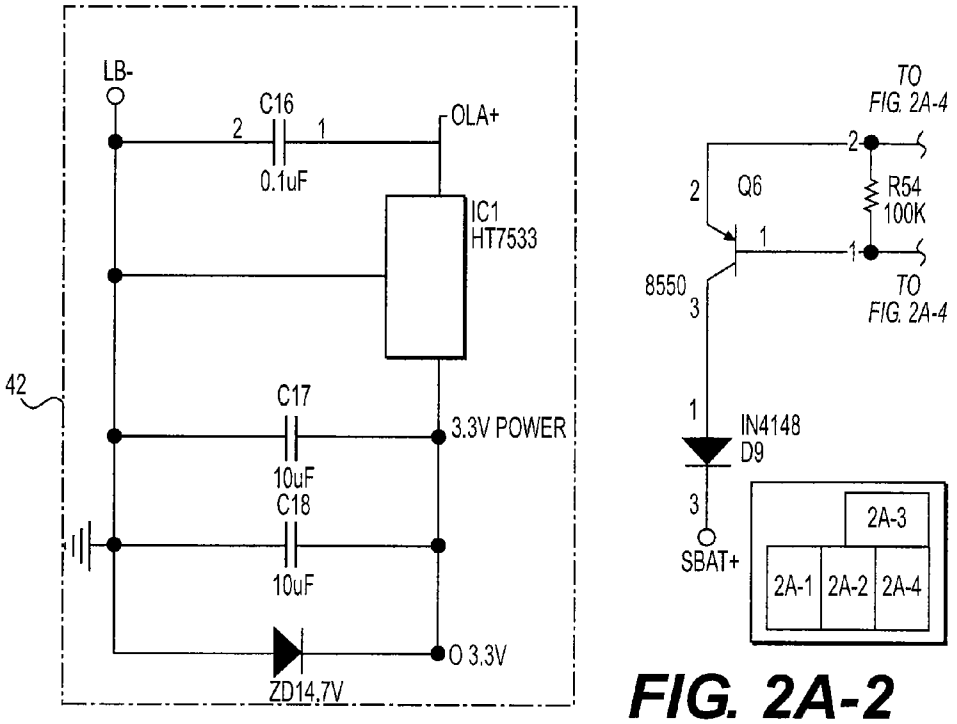
LB-
C16
0.1uF
OLA+
IC1
HT7533
42
C17
10uF
3.3V POWER
C18
10uF
ZD14.7V
3.3V
TO FIG. 2A-4
Q6
R54
100K
8550
TO FIG. 2A-4
IN4148
D9
SBAT+
2A-3
2A-1
2A-2
2A-4

FIG. 2A-2

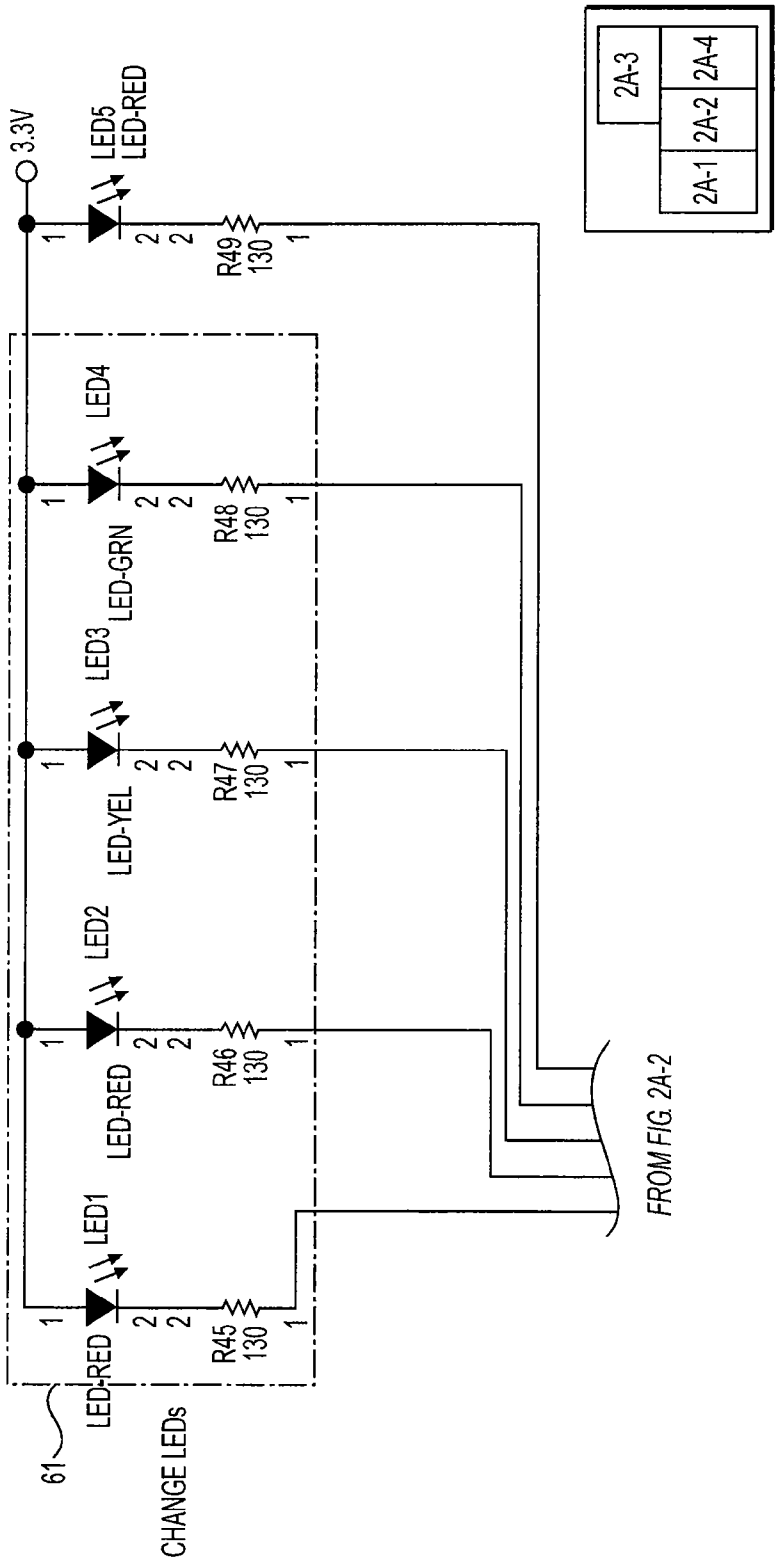
3.3V
LED5
LED-RED
R49
130
LED4
LED-GRN
R48
130
LED3
LED-YEL
R47
130
LED2
LED-RED
R46
130
LED1
LED-RED
R45
130
61
CHANGE LEDs
FROM FIG. 2A-2
2A-1
2A-2
2A-3
2A-4

FIG. 2A-3

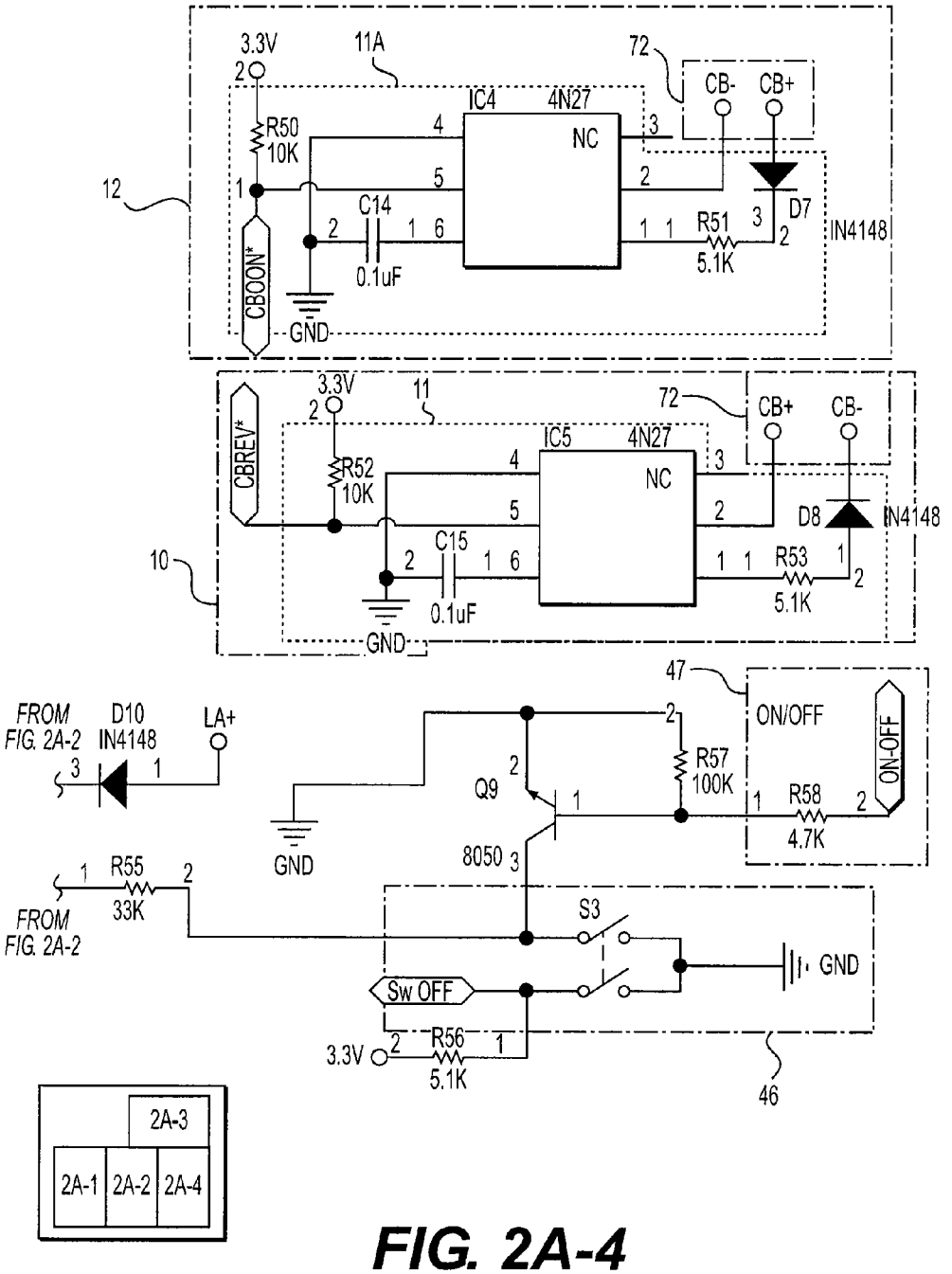
3.3V
11A
72
CB-
CB+
IC4
4N27
NC
R50
10K
12
C14
0.1uF
R51
5.1K
D7
IN4148
CBOON*
GND
3.3V
11
72
CB+
CB-
CBREV*
IC5
4N27
NC
R52
10K
D8
IN4148
C15
0.1uF
R53
5.1K
10
GND
47
ON/OFF
ON-OFF
FROM FIG. 2A-2
D10
IN4148
LA+
R57
100K
Q9
R58
4.7K
GND
8050
R55
33K
FROM FIG. 2A-2
S3
GND
Sw OFF
3.3V
R56
5.1K
46
2A-3
2A-1
2A-2
2A-4

FIG. 2A-4

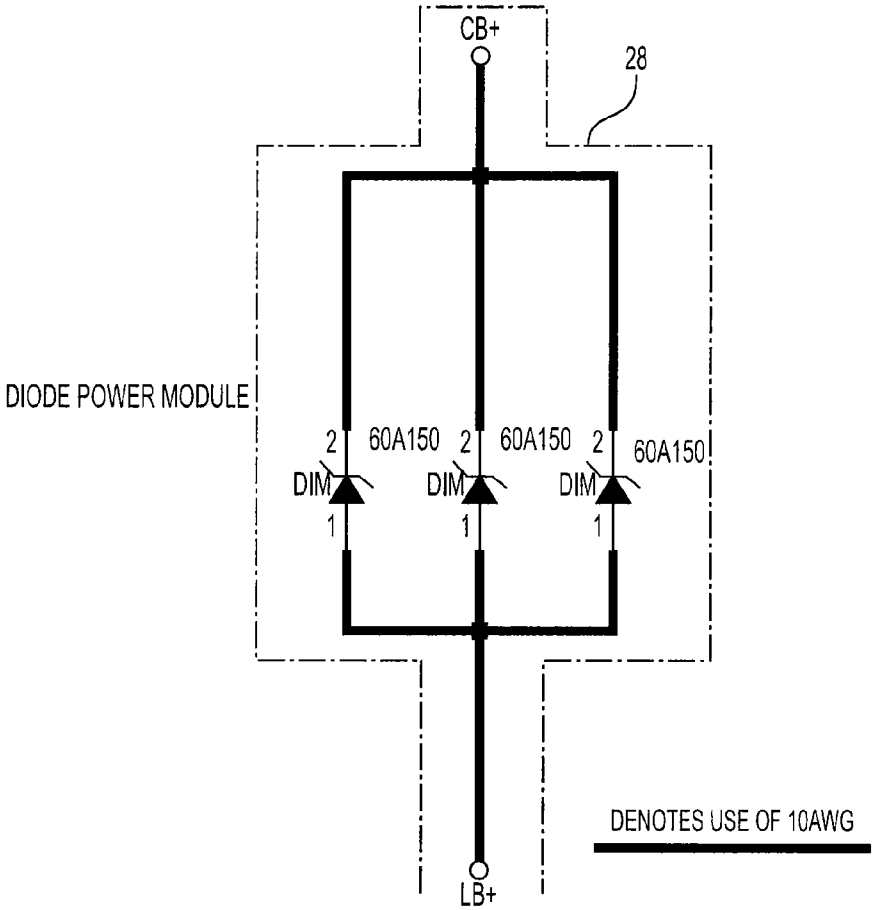
CB+
28
DIODE POWER MODULE
2
60A150
2
60A150
2
60A150
DIM
DIM
DIM
1
1
1
DENOTES USE OF 10AWG
LB+

FIG. 2B-1

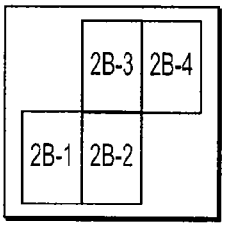
2B-3
2B-4
2B-1
2B-2

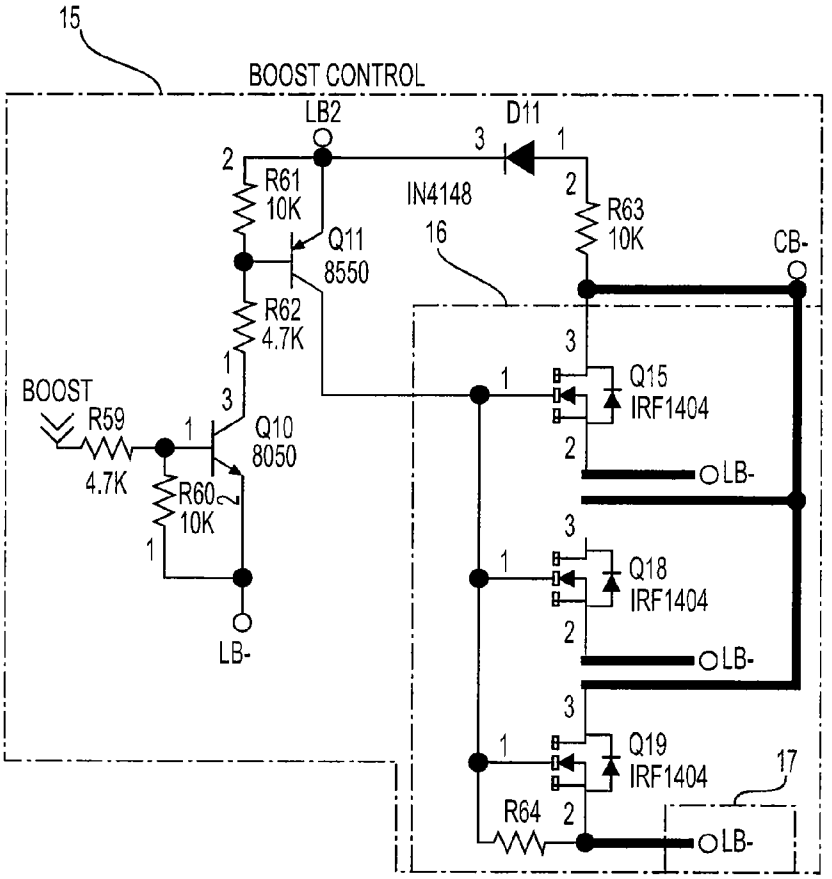
15
BOOST CONTROL
LB2
D11
IN4148
R61
10K
Q11
8550
R62
4.7K
R63
10K
CB-
16
BOOST
R59
4.7K
Q10
8050
R60
10K
LB-
Q15
IRF1404
LB-
Q18
IRF1404
LB-
Q19
IRF1404
17
R64
LB-

FIG. 2B-2

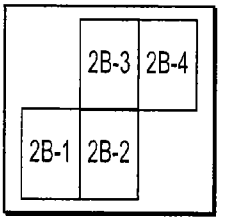
2B-3
2B-4
2B-1
2B-2

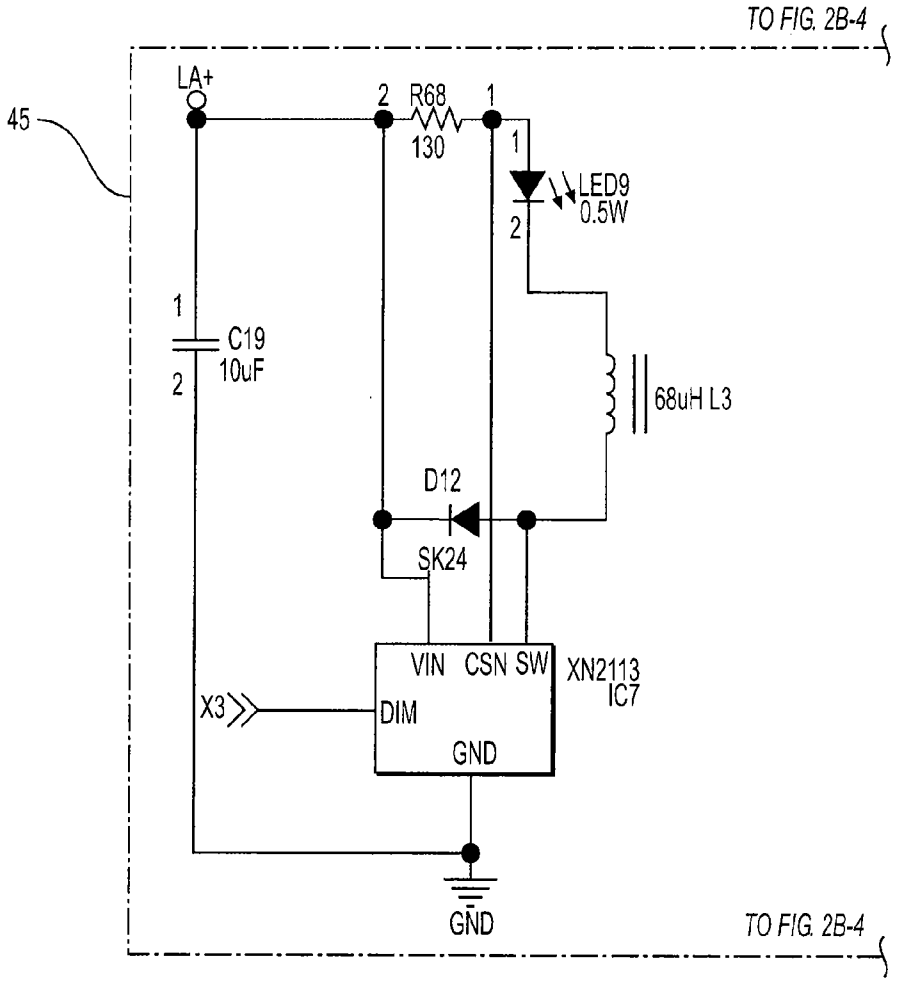
TO FIG. 2B-4
45
LA+
2
R68
130
1
1
LED9
0.5W
2
1
C19
10uF
2
68uH L3
D12
SK24
VIN
CSN
SW
XN2113
IC7
X3
DIM
GND
GND
TO FIG. 2B-4

FIG. 2B-3

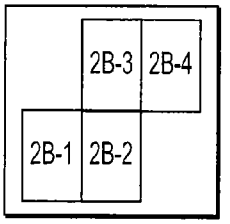
2B-3
2B-4
2B-1
2B-2

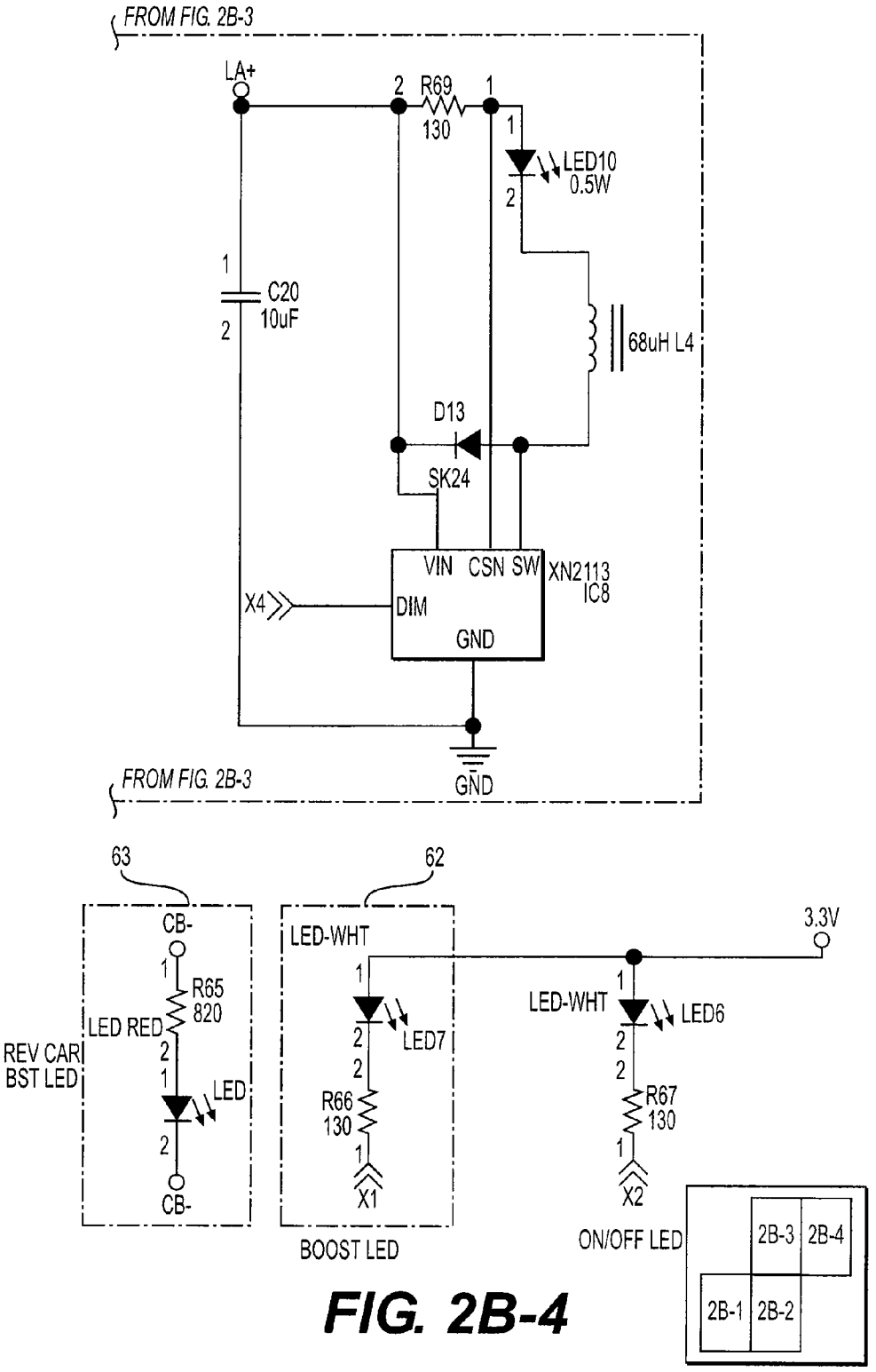
FROM FIG. 2B-3
LA+
R69
130
LED10
0.5W
C20
10uF
68uH L4
D13
SK24
VIN
CSN
SW
XN2113
IC8
X4
DIM
GND
GND
FROM FIG. 2B-3
63
62
CB-
R65
820
LED RED
REV CAR
BST LED
LED
CB-
LED-WHT
LED7
R66
130
X1
BOOST LED
3.3V
LED-WHT
LED6
R67
130
X2
ON/OFF LED
2B-3
2B-4
2B-1
2B-2

FIG. 2B-4

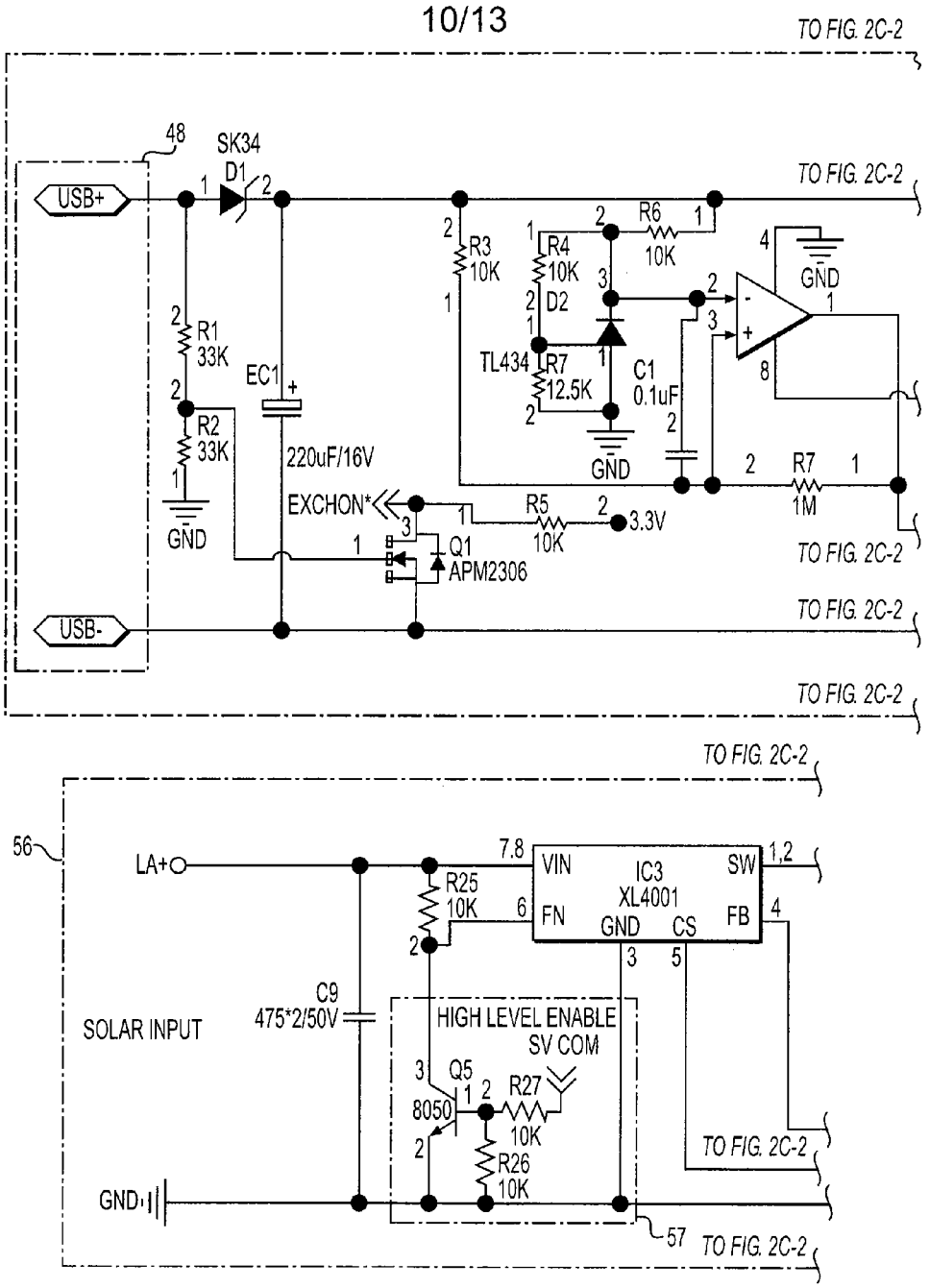
10/13
TO FIG. 2C-2
48
SK34
D1
USB+
USB-
R1
33K
R2
33K
GND
EC1
220uF/16V
EXCHON*
Q1
APM2306
R3
10K
R4
10K
D2
TL434
R7
12.5K
C1
0.1uF
R6
10K
R5
10K
3.3V
R7
1M
56
LA+
R25
10K
IC3
XL4001
VIN
FN
GND
CS
SW
FB
C9
475*2/50V
SOLAR INPUT
HIGH LEVEL ENABLE
SV COM
Q5
8050
R27
10K
R26
10K
GND
57

FIG. 2C-1

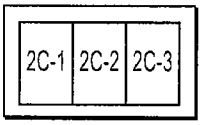
2C-1
2C-2
2C-3

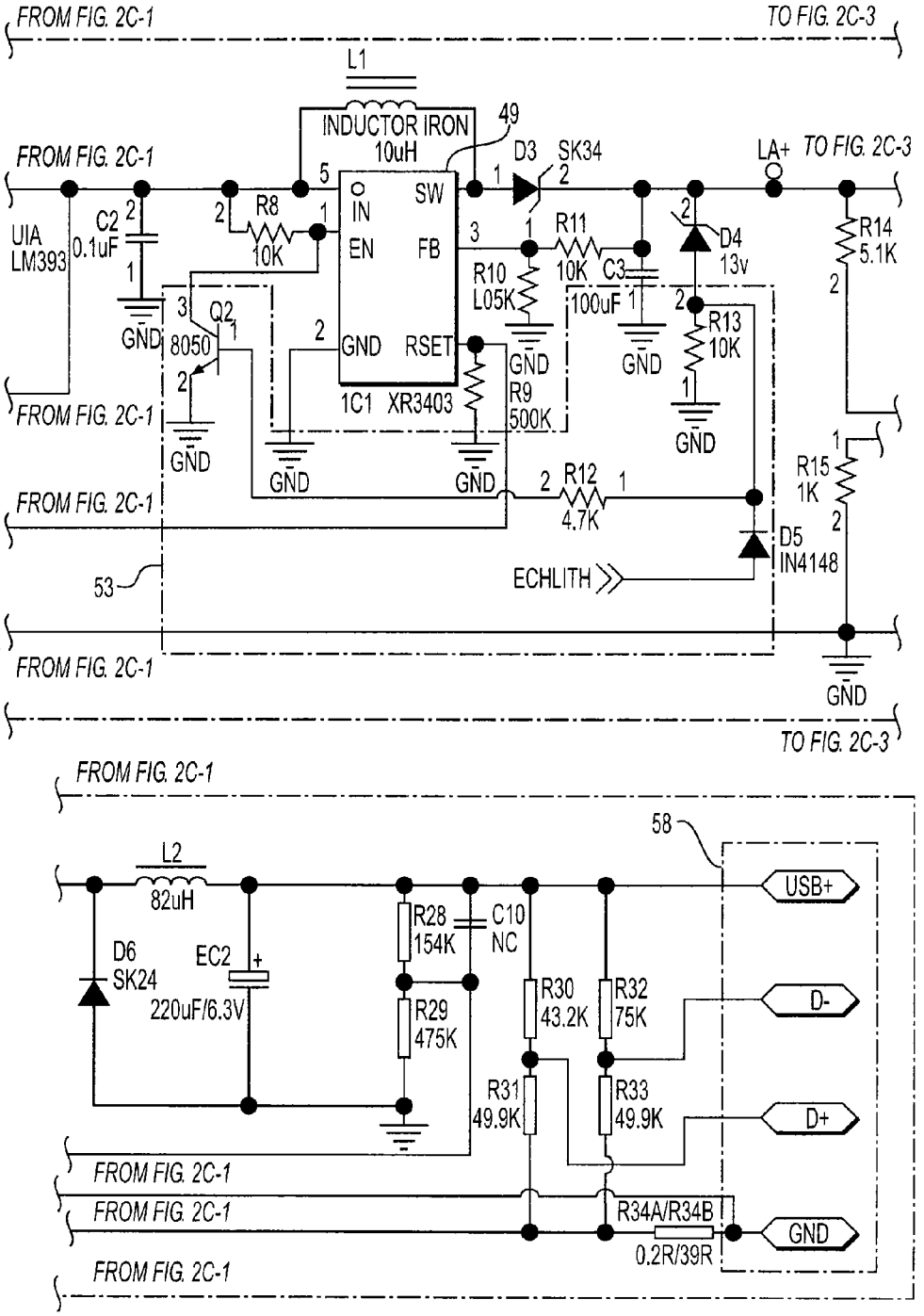
FROM FIG. 2C-1
TO FIG. 2C-3
L1
INDUCTOR IRON
10uH
49
D3
SK34
LA+
UIA
LM393
C2
0.1uF
R8
10K
IN
SW
EN
FB
GND
RSET
1C1 XR3403
R10
L05K
R11
10K
C3
100uF
D4
13v
R13
10K
R14
5.1K
Q2
8050
R9
500K
R12
4.7K
R15
1K
D5
IN4148
ECHLITH
53
GND
L2
82uH
D6
SK24
EC2
220uF/6.3V
R28
154K
C10
NC
R29
475K
R30
43.2K
R32
75K
R31
49.9K
R33
49.9K
58
USB+
D-
D+
R34A/R34B
0.2R/39R
2C-1
2C-2
2C-3

FIG. 2C-2

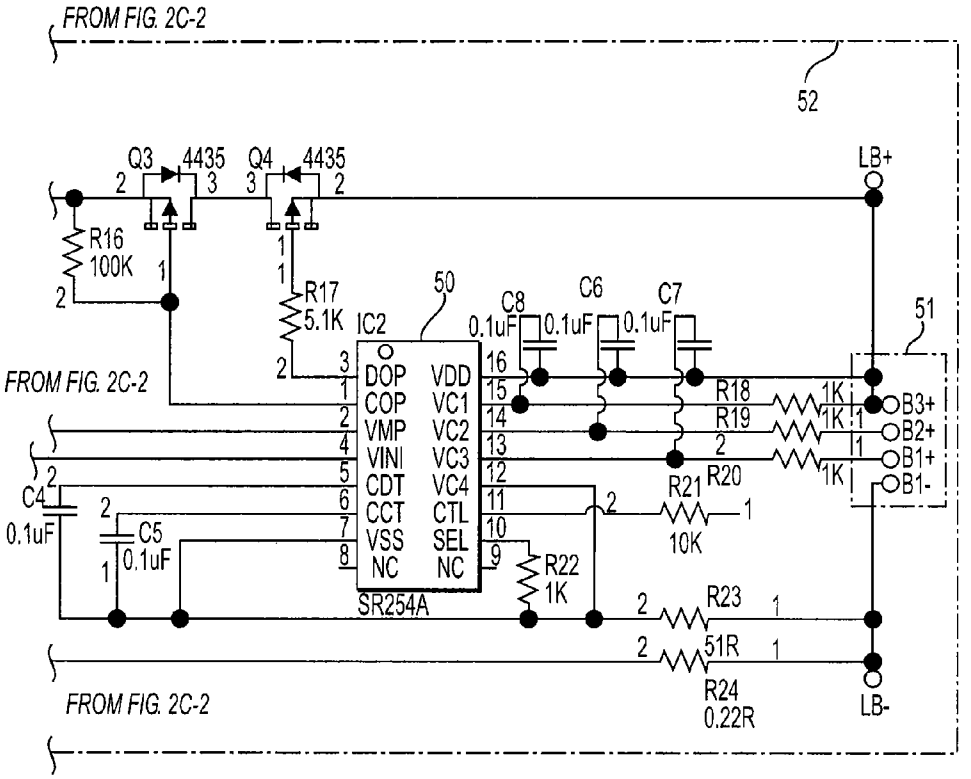
FROM FIG. 2C-2
52
Q3
4435
Q4
4435
LB+
R16
100K
R17
5.1K
IC2
50
C8
0.1uF
C6
0.1uF
C7
0.1uF
51
FROM FIG. 2C-2
DOP
COP
VMP
VINI
CDT
CCT
VSS
NC
VDD
VC1
VC2
VC3
VC4
CTL
SEL
NC
SR254A
R18
1K
R19
1K
R20
1K
B3+
B2+
B1+
B1-
C4
0.1uF
C5
0.1uF
R21
10K
R22
1K
R23
51R
R24
0.22R
FROM FIG. 2C-2
LB-

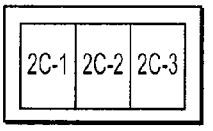
2C-1
2C-2
2C-3

FIG. 2C-3

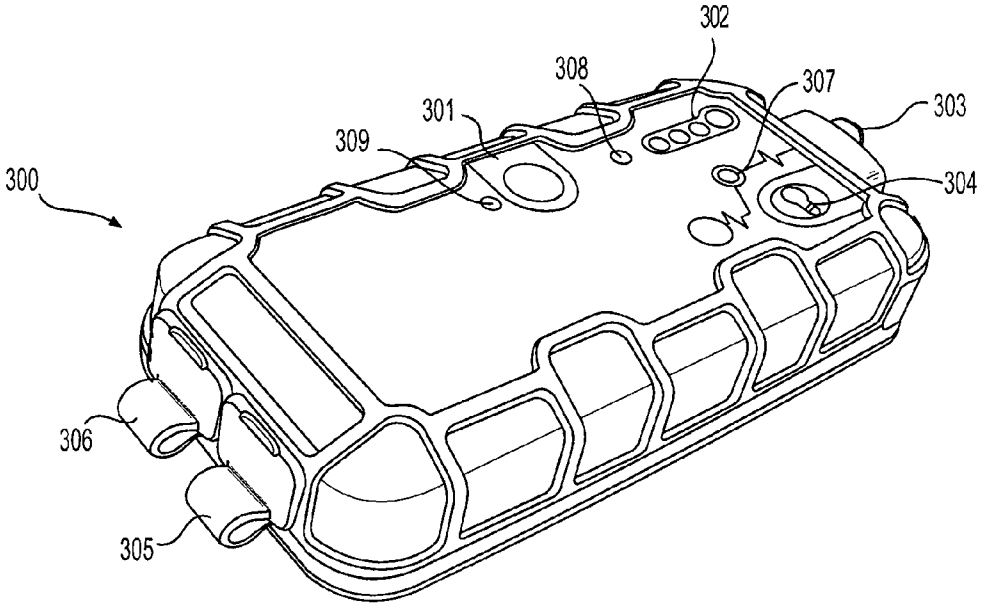
302
308
307
303
301
309
300
304
306
305

FIG. 3

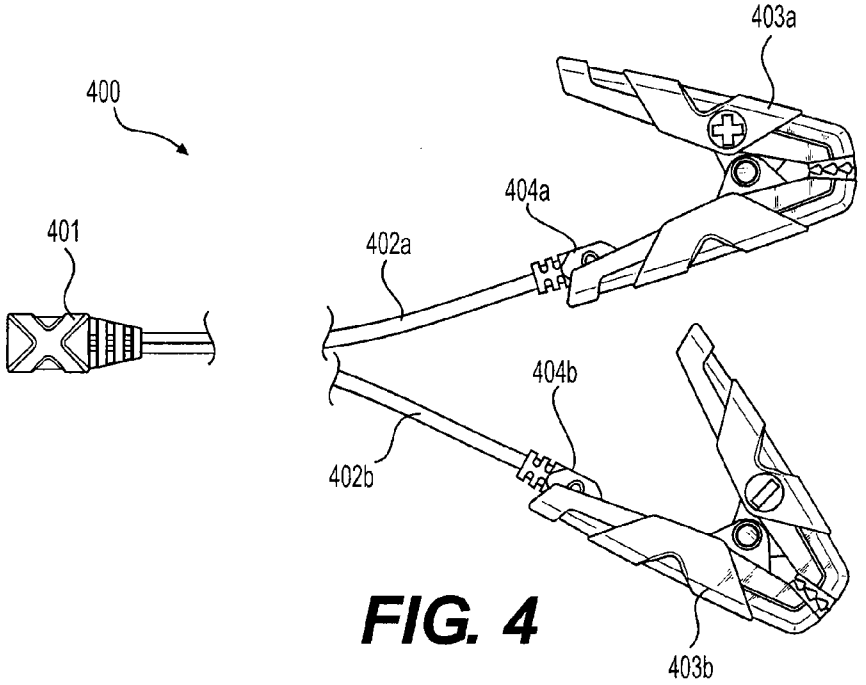
403a
400
404a
401
402a
404b
402b
403b

FIG. 4

PORTABLE VEHICLE BATTERY JUMP START APPARATUS WITH SAFETY PROTECTION

BACKGROUND OF THE INVENTION

The present invention relates generally to apparatus for jump-starting a vehicle having a depleted or discharged battery. Prior art devices are known, which provide either a pair of electrical connector cables that connect a fully-charged battery of another vehicle to the engine start circuit of the dead battery vehicle, or portable booster devices which include a fully-charged battery which can be connected in circuit with the vehicle's engine starter through a pair of cables.

Problems with the prior art arose when either the jumper terminals or clamps of the cables were inadvertently brought into contact with each other while the other ends were connected to a charged battery, or when the positive and negative terminals were connected to the opposite polarity terminals in the vehicle to be jumped, thereby causing a short circuit resulting in sparking and potential damage to batteries and/or bodily injury.

Various attempts to eliminate these problems have been made in the prior art. U.S. Pat. No. 6,212,054 issued Apr. 3, 2001, discloses a battery booster pack that is polarity sensitive and can detect proper and improper connections before providing a path for electric current flow. The device uses a set of LEDs connected to optical couplers oriented by a control circuit. The control circuit controls a solenoid assembly controlling the path of power current. The control circuit causes power current to flow through the solenoid assembly only if the points of contact of booster cable clamp connections have been properly made.

U.S. Pat. No. 6,632,103 issued Oct. 14, 2003, discloses an adaptive booster cable connected with two pairs of clips, wherein the two pairs of clips are respectively attached to two batteries to transmit power from one battery to the other battery. The adaptive booster cable includes a polarity detecting unit connected to each clip, a switching unit and a current detecting unit both provided between the two pairs of clips. After the polarity of each clip is sensed by the polarity detecting unit, the switching unit generates a proper connection between the two batteries. Therefore, the positive and negative terminals of the two batteries are correctly connected based on the detected result of the polarity detecting unit.

U.S. Pat. No. 8,493,021 issued Jul. 23, 2013, discloses apparatus that monitors the voltage of the battery of a vehicle to be jump started and the current delivered by the jump starter batteries to determine if a proper connection has been established and to provide fault monitoring. Only if the proper polarity is detected can the system operate. The voltage is monitored to determine open circuit, disconnected conductive clamps, shunt cable fault, and solenoid fault conditions. The current through the shunt cable is monitored to determine if there is a battery explosion risk, and for excessive current conditions presenting an overheating condition, which may result in fire. The system includes an internal battery to provide the power to the battery of the vehicle to be jump started. Once the vehicle is started, the unit automatically electrically disconnects from the vehicle's battery.

U.S. Pat. No. 5,189,359 issued Feb. 23, 1993, discloses a jumper cable device having two bridge rectifiers for developing a reference voltage, a four-input decoder for determining which terminals are to be connected based on a comparison of the voltage at each of the four terminals to the reference voltage, and a pair of relays for effecting the correct connection depending on the determination of the decoder. No connection will be made unless only one terminal of each battery has a higher voltage than the reference voltage, indicating "positive" terminals, and one has a lower voltage than the reference voltage, indicating "negative" terminals, and that, therefore, the two high voltage terminals may be connected and the two lower voltage terminals may be connected. Current flows once the appropriate relay device is closed. The relay device is preferably a MOSFET combined with a series array of photodiodes that develop MOSFET gate-closing potential when the decoder output causes an LED to light.

U.S. Pat. No. 5,795,182 issued Aug. 18, 1998, discloses a polarity independent set of battery jumper cables for jumping a first battery to a second battery. The apparatus includes a relative polarity detector for detecting whether two batteries are configured cross or parallel. A three-position high current capacity crossbar pivot switch is responsive to the relative polarity detector for automatically connecting the plus terminals of the two batteries together and the minus terminals of the two batteries together regardless of whether the configuration detected is cross or parallel, and an undercurrent detector and a delay circuit for returning the device to its ready and unconnected state after the device has been disconnected from one of the batteries. The crossbar pivot switch includes two pairs of contacts, and a pivot arm that pivots about two separate points to ensure full electrical contact between the pairs of contacts. The invention can also be used to produce a battery charger that may be connected to a battery without regard to the polarity of the battery.

U.S. Pat. No. 6,262,492 issued Jul. 17, 2001, discloses a car battery jumper cable for accurately coupling an effective power source to a failed or not charged battery, which includes a relay switching circuit connected to the power source and the battery by two current conductor pairs. First and second voltage polarity recognition circuits are respectively connected to the power source and the battery by a respective voltage conductor pair to recognize the polarity of the power source and the battery. A logic recognition circuit produces a control signal subject to the polarity of the power source and the battery, and a driving circuit controlled by the control signal from the logic recognition circuit drives the relay switching circuit, enabling the two poles of the power source to be accurately coupled to the two poles of the battery.

U.S. Pat. No. 5,635,817 issued Jun. 3, 1997, discloses a vehicle battery charging device that includes a control housing having cables including a current limiting device to prevent exceeding of a predetermined maximum charging current of about 40 to 60 amps. The control housing includes a polarity detecting device to verify the correct polarity of the connection of the terminals of the two batteries and to electrically disconnect the two batteries if there is an incorrect polarity.

U.S. Pat. No. 8,199,024 issued Jun. 12, 2012, discloses a safety circuit in a low-voltage connecting system that leaves the two low-voltage systems disconnected until it determines that it is safe to make a connection. When the safety circuit determines that no unsafe conditions exist and that it is safe to connect the two low-voltage systems, the safety circuit may connect the two systems by way of a "soft start" that provides a connection between the two systems over a period of time that reduces or prevents inductive voltage spikes on one or more of the low-voltage systems. When one of the low-voltage systems has a completely-discharged battery incorporated into it, a method is used for detection of proper polarity of the connections between the low-voltage systems. The polarity of the discharged battery is determined by passing

one or more test currents through it and determining whether a corresponding voltage rise is observed.

U.S. Pat. No. 5,793,185 issued Aug. 11, 1998, discloses a hand-held jump starter having control components and circuits to prevent overcharging and incorrect connection to batteries.

While the prior art attempted solutions to the abovementioned problems as discussed above, each of the prior art solutions suffers from other shortcomings, either in complexity, cost or potential for malfunction. Accordingly, there exists a need in the art for further improvements to vehicle jump start devices.

SUMMARY OF THE INVENTION

In accordance with an aspect of the invention, apparatus is provided for jump starting a vehicle engine, including: an internal power supply; an output port having positive and negative polarity outputs; a vehicle battery isolation sensor connected in circuit with said positive and negative polarity outputs, configured to detect presence of a vehicle battery connected between said positive and negative polarity outputs; a reverse polarity sensor connected in circuit with said positive and negative polarity outputs, configured to detect polarity of a vehicle battery connected between said positive and negative polarity outputs; a power FET switch connected between said internal power supply and said output port; and a microcontroller configured to receive input signals from said vehicle isolation sensor and said reverse polarity sensor, and to provide an output signal to said power FET switch, such that said power FET switch is turned on to connect said internal power supply to said output port in response to signals from said sensors indicating the presence of a vehicle battery at said output port and proper polarity connection of positive and negative terminals of said vehicle battery with said positive and negative polarity outputs.

In accordance with another aspect of the invention, the internal power supply is a rechargeable lithium ion battery pack.

In accordance with yet another aspect of the invention, a jumper cable device is provided, having a plug configured to plug into an output port of a handheld battery charger booster device having an internal power supply; a pair of cables integrated with the plug at one respective end thereof; said pair of cables being configured to be separately connected to terminals of a battery at another respective end thereof.

BRIEF DESCRIPTION OF THE DRAWINGS

FIG. **1** is a functional block diagram of a handheld vehicle battery boost apparatus in accordance with one aspect of the present invention;

FIGS. **2A-1-2C-3** are schematic circuit diagrams of an example embodiment of a handheld vehicle battery boost apparatus in accordance with an aspect of the invention;

FIG. **3** is a perspective view of a handheld jump starter booster device in accordance with one example embodiment of the invention; and

FIG. **4** is a plan view of a jumper cable usable with the handheld jump starter booster device in accordance with another aspect of the invention.

DETAILED DESCRIPTION OF THE INVENTION

FIG. **1** is a functional block diagram of a handheld battery booster according to one aspect of the invention. At the heart of the handheld battery booster is a lithium polymer battery pack **32**, which stores sufficient energy to jump start a vehicle engine served by a conventional 12 volt lead-acid or valve regulated lead-acid battery. In one example embodiment, a high-surge lithium polymer battery pack includes three 3.7V, 2666 mAh lithium polymer batteries in a 351P configuration. The resulting battery pack provides 11.1V, 2666 Ah (8000 Ah at 3.7V, 29.6 Wh). Continuous discharge current is 25 C (or 200 amps), and burst discharge current is 50 C (or 400 amps). The maximum charging current of the battery pack is 8000 mA (8 amps).

A programmable microcontroller unit (MCU) **1** receives various inputs and produces informational as well as control outputs. The programmable MCU **1** further provides flexibility to the system by allowing updates in functionality and system parameters, without requiring any change in hardware. According to one example embodiment, an 8 bit microcontroller with 2K×15 bits of flash memory is used to control the system. One such microcontroller is the HT67F30, which is commercially available from Holtek Semiconductor Inc.

A car battery reverse sensor **10** monitors the polarity of the vehicle battery **72** when the handheld battery booster device is connected to the vehicle's electric system. As explained below, the booster device prevents the lithium battery pack from being connected to the vehicle battery **72** when the terminals of the battery **72** are connected to the wrong terminals of the booster device. A car battery isolation sensor **12** detects whether or not a vehicle battery **72** is connected to the booster device, and prevents the lithium battery pack from being connected to the output terminals of the booster device unless there is a good (e.g. chargeable) battery connected to the output terminals.

A smart switch FET circuit **15** electrically switches the handheld battery booster lithium battery to the vehicle's electric system only when the vehicle battery is determined by the MCU **1** to be present (in response to a detection signal provided by isolation sensor **12**) and connected with the correct polarity (in response to a detection signal provided by reverse sensor **10**). A lithium battery temperature sensor **20** monitors the temperature of the lithium battery pack **32** to detect overheating due to high ambient temperature conditions and overextended current draw during jump starting. A lithium battery voltage measurement circuit **24** monitors the voltage of the lithium battery pack **32** to prevent the voltage potential from rising too high during a charging operation and from dropping too low during a discharge operation.

Lithium battery back-charge protection diodes **28** prevent any charge current being delivered to the vehicle battery **72** from flowing back to the lithium battery pack **32** from the vehicle's electrical system. Flashlight LED circuit **36** is provided to furnish a flashlight function for enhancing light under a vehicle's hood in dark conditions, as well as providing SOS and strobe lighting functions for safety purposes when a vehicle may be disabled in a potentially dangerous location. Voltage regulator **42** provides regulation of internal operating voltage for the microcontroller and sensors. On/Off manual mode and flashlight switches **46** allow the user to control power-on for the handheld battery booster device, to control manual override operation if the vehicle has no battery, and to control the flashlight function. The manual button functions only when the booster device is powered on. This button allows the user to jump-start vehicles that have either a missing battery, or the battery voltage is so low that automatic detection by the MCU is not possible. When the user presses and holds the manual override button for a predetermined period time (such as three seconds) to prevent inadvertent actuation of the manual mode, the internal lithium ion battery power is switched to the vehicle battery connect port.

The only exception to the manual override is if the car battery is connected in reverse. If the car battery is connected in reverse, the internal lithium battery power shall never be switched to the vehicle battery connect port.

USB charge circuit **52** converts power from any USB charger power source, to charge voltage and current for charging the lithium battery pack **32**. USB output **56** provides a USB portable charger for charging smartphones, tablets, and other rechargeable electronic devices. Operation indicator LEDs **60** provide visual indication of lithium battery capacity status as well as an indication of smart switch activation status (indicating that power is being provided to the vehicle's electrical system).

Detailed operation of the handheld booster device will now be described with reference to the schematic diagrams of FIGS. **2A-1-2C-3**. As shown in FIG. **2A-2**, the microcontroller unit **1** is the center of all inputs and outputs. The reverse battery sensor **10** comprises an optically coupled isolator phototransistor (4N27) connected to the terminals of vehicle battery **72** at input pins **1** and **2** with a diode D**8** in the lead conductor of pin **1** (associated with the negative terminal CB−), such that if the battery **72** is connected to the terminals of the booster device with the correct polarity, the optocoupler LED **11** will not conduct current, and is therefore turned off, providing a "1" or high output signal to the MCU **1**. The car battery isolation sensor **12** comprises an optically coupled isolator phototransistor (4N27) connected to the terminals of vehicle battery **72** at input pins **1** and **2** with a diode D**7** in the lead conductor of pin **1** (associated with the positive terminal CB+), such that if the battery **72** is connected to the terminals of the booster device with the correct polarity, the optocoupler LED **11**A will conduct current, and is therefore turned on, providing a "0" or low output signal to the MCU, indicating the presence of a battery across the jumper output terminals of the handheld booster device.

If the car battery **72** is connected to the handheld booster device with reverse polarity, the optocoupler LED **11** of the reverse sensor **10** will conduct current, providing a "0" or low signal to microcontroller unit **1**. Further, if no battery is connected to the handheld booster device, the optocoupler LED **11**A of the isolation sensor **12** will not conduct current, and is therefore turned off, providing a "1" or high output signal to the MCU, indicating the absence of any battery connected to the handheld booster device. Using these specific inputs, the microcontroller software of MCU **1** can determine when it is safe to turn on the smart switch FET **15**, thereby connecting the lithium battery pack to the jumper terminals of the booster device. Consequently, if the car battery **72** either is not connected to the booster device at all, or is connected with reverse polarity, the MCU **1** can keep the smart switch FET **15** from being turned on, thus prevent sparking/short circuiting of the lithium battery pack.

As shown in FIG. **2B-2**, the FET smart switch **15** is driven by an output of the microcontroller **1**. The FET smart switch **15** includes three FETs (Q**15**, Q**18**, and Q**19**) in parallel, which spreads the distribution of power from the lithium battery pack over the FETs. When that microcontroller output is driven to a logic low, FETs **16** are all in a high resistance state, therefore not allowing current to flow from the internal lithium battery negative contact **17** to the car battery **72** negative contact. When the micro controller output is driven to a logic high, the FETs **16** (Q**15**, Q**18**, and Q**19**) are in a low resistant state, allowing current to flow freely from the internal lithium battery pack negative contact **17** (LB−) to the car battery **72** negative contact (CB−). In this way, the microcontroller software controls the connection of the internal lithium battery pack **32** to the vehicle battery **72** for jumpstarting the car engine.

Referring back to FIG. **2A-1**, the internal lithium battery pack voltage can be accurately measured using circuit **24** and one of the analog-to-digital inputs of the microcontroller **1**. Circuit **24** is designed to sense when the main 3.3V regulator **42** voltage is on, and to turn on transistor **23** when the voltage of regulator **42** is on. When transistor **23** is conducting, it turns on FET **22**, thereby providing positive contact (LB+) of the internal lithium battery a conductive path to voltage divider **21** allowing a lower voltage range to be brought to the microcontroller to be read. Using this input, the microcontroller software can determine if the lithium battery voltage is too low during discharge operation or too high during charge operation, and take appropriate action to prevent damage to electronic components.

Still referring to FIG. **2A-1**, the temperature of the internal lithium battery pack **32** can be accurately measured by two negative temperature coefficient (NTC) devices **20**. These are devices that reduce their resistance when their temperature rises. The circuit is a voltage divider that brings the result to two analog-to-digital (A/D) inputs on the microcontroller **1**. The microcontroller software can then determine when the internal lithium battery is too hot to allow jumpstarting, adding safety to the design.

The main voltage regulator circuit **42** is designed to convert internal lithium battery voltage to a regulated 3.3 volts that is utilized by the microcontroller **1** as well as by other components of the booster device for internal operating power. Three lithium battery back charge protection diodes **28** (see FIG. **2B-1**) are in place to allow current to flow only from the internal lithium battery pack **32** to the car battery **72**, and not from the car battery to the internal lithium battery. In this way, if the car electrical system is charging from its alternator, it cannot back-charge (and thereby damage) the internal lithium battery, providing another level of safety. The main power on switch **46** (FIG. **2A-1**) is a combination that allows for double pole, double throw operation so that with one push, the product can be turned on if it is in the off state, or turned off if it is in the on state. This circuit also uses a microcontroller output **47** to "keep alive" the power when it is activated by the on switch. When the switch is pressed the microcontroller turns this output to a high logic level to keep power on when the switch is released. In this way, the microcontroller maintains control of when the power is turned off when the on/off switch is activated again or when the lithium battery voltage is getting too low. The microcontroller software also includes a timer that turns the power off after a predefined period of time, (such as, e.g. 8 hours) if not used.

The flashlight LED circuit **45** shown in FIG. **2B-3** controls the operation of flashlight LEDs. Two outputs from the microcontroller **1** are dedicated to two separate LEDs. Thus, the LEDs can be independently software-controlled for strobe and SOS patterns, providing yet another safety feature to the booster device. LED indicators provide the feedback the operator needs to understand what is happening with the product. Four separate LEDs **61** (FIG. **2A**) are controlled by corresponding individual outputs of microcontroller **1** to provide indication of the remaining capacity of the internal lithium battery. These LEDs are controlled in a "fuel gauge" type format with 25%, 50%, 75% and 100% (red, red, yellow, green) capacity indications. An LED indicator **63** (FIG. **2B-4**) provides a visual warning to the user when the vehicle battery **72** has been connected in reverse polarity. "Boost" and on/off

LEDs **62** provide visual indications when the booster device is provide jump-start power, and when the booster device is turned on, respectively.

A USB output **56** circuit (FIG. **2C-1**) is included to provide a USB output for charging portable electronic devices such as smartphones from the internal lithium battery pack **32**. Control circuit **57** from the microcontroller **1** allows the USB Out **56** to be turned on and off by software control to prevent the internal lithium battery getting too low in capacity. The USB output is brought to the outside of the device on a standard USB connector **58**, which includes the standard voltage divider required for enabling charge to certain smartphones that require it. The USB charge circuit **52** allows the internal lithium battery pack **32** to be charged using a standard USB charger. This charge input uses a standard micro-USB connector **48** allowing standard cables to be used. The 5V potential provided from standard USB chargers is up-converted to the 12.4VDC voltage required for charging the internal lithium battery pack using a DC-DC converter **49**. The DC-DC converter **49** can be turned on and off via circuit **53** by an output from the microcontroller **1**.

In this way, the microcontroller software can turn the charge off if the battery voltage is measured to be too high by the A/D input **22**. Additional safety is provided for helping to eliminate overcharge to the internal lithium battery using a lithium battery charge controller **50** that provides charge balance to the internal lithium battery cells **51**. This controller also provides safety redundancy for eliminating over discharge of the internal lithium battery.

FIG. **3** is a perspective view of a handheld device **300** in accordance with an exemplary embodiment of the invention. **301** is a power on switch. **302** shows the LED "fuel gauge" indicators **61**. **303** shows a 12 volt output port connectable to a cable device **400**, described further below. **304** shows a flashlight control switch for activating flashlight LEDs **45**. **305** is a USB input port for charging the internal lithium battery, and **306** is a USB output port for providing charge from the lithium battery to other portable devices such as smartphones, tablets, music players, etc. **307** is a "boost on" indicator showing that power is being provided to the 12V output port. **308** is a "reverse" indicator showing that the vehicle battery is improperly connected with respect to polarity. **309** is a "power on" indicator showing that the device is powered up for operation.

FIG. **4** shows a jumper cable device **400** specifically designed for use with the handheld device **300**. Device **400** has a plug **401** configured to plug into 12 volt output port **303** of the handheld device **300**. A pair of cables **402***a* and **402***b* are integrated with the plug **401**, and are respectively connected to battery terminal clamps **403***a* and **403***b* via ring terminals **404***a* and **404***b*. The port **303** and plug **401** may be dimensioned so that the plug **401** will only fit into the port **303** in a specific orientation, thus ensuring that clamp **403***a* will correspond to positive polarity, and clamp **403***b* will correspond to negative polarity, as indicated thereon. Additionally, the ring terminals **404***a* and **404***b* may be disconnected from the clamps and connected directly to the terminals of a vehicle battery. This feature may be useful, for example, to permanently attach the cables **302***a*-**302***b* to the battery of a vehicle. In the event that the battery voltage becomes depleted, the handheld booster device **300** could be properly connected to the battery very simply by plugging in the plug **401** to the port **303**.

The invention having been thus described, it will be apparent to those skilled in the art that the same may be varied in many ways without departing from the spirit or scope of the invention. Any and all such variations are intended to be encompassed within the scope of the following claims.

What is claimed is:

1. Apparatus for jump starting a vehicle engine, comprising:

an internal power supply;

an output port having positive and negative polarity outputs;

a vehicle battery isolation sensor connected in circuit with said positive and negative polarity outputs, configured to detect presence of a vehicle battery connected between said positive and negative polarity outputs;

a reverse polarity sensor connected in circuit with said positive and negative polarity outputs, configured to detect polarity of a vehicle battery connected between said positive and negative polarity outputs and to provide an output signal indicating whether positive and negative terminals of said vehicle battery are properly connected with said positive and negative polarity outputs of said output port;

a power switch connected between said internal power supply and said output port; and

a microcontroller configured to receive input signals from said vehicle isolation sensor and said reverse polarity sensor, and to provide an output signal to said power switch, such that said power switch is turned on to cause said internal power supply to be connected to said output port in response to signals from said sensors indicating the presence of a vehicle battery at said output port and proper polarity connection of positive and negative terminals of said vehicle battery with said positive and negative polarity outputs, and is not turned on when signals from said sensors indicate either the absence of a vehicle battery at said output port or improper polarity connection of positive and negative terminals of said vehicle battery with said positive and negative polarity outputs.

2. The apparatus of claim **1**, wherein said internal power supply comprises a lithium ion battery.

3. The apparatus of claim **2**, wherein said lithium ion battery comprises a battery pack of multiple lithium ion batteries.

4. The apparatus of claim **1**, wherein said power switch comprises a plurality of FETs in parallel.

5. The apparatus of claim **1**, wherein said vehicle isolation sensor and reverse polarity sensor comprise optically coupled isolator phototransistors.

6. The apparatus of claim **1**, further comprising a plurality of power diodes coupled between said output port and said internal power supply to prevent back-charging of said internal power supply from an electrical system connected to said output port.

7. The apparatus of claim **1**, further comprising a temperature sensor configured to detect temperature of said internal power supply and to provide a temperature signal to said microcontroller.

8. The apparatus of claim **1**, further comprising a voltage measurement circuit configured to measure output voltage of said internal power supply and to provide a voltage measurement signal to said microcontroller.

9. The apparatus of claim **1**, further comprising a voltage regulator configured to convert output voltage of said internal power supply to a voltage level appropriate to provide operating power to internal components of the apparatus.

10. The apparatus of claim **1**, further comprising a USB output port configured to provide charging power from said internal power supply to a USB-chargeable device.

11. The apparatus of claim **1**, further comprising a USB charging port configured to provide charging power from an external power source to said internal power supply.

12. The apparatus of claim **1**, further comprising a flashlight circuit configured to provide a source of light to a user.

13. The apparatus of claim **12**, wherein said source of light is at least one LED.

14. The apparatus of claim **13**, wherein said microcontroller is configured to control said at least one LED to provide a visual alarm indicating an emergency situation.

15. The apparatus of claim **1**, further comprising a plurality of visual indicators configured to display remaining capacity status of said internal power supply.

16. The apparatus of claim **15**, wherein said plurality of visual indicators comprises a plurality of LEDs providing output light of different colors.

17. The apparatus of claim **1**, further comprising a visual indicator configured to warn a user when a vehicle battery is connected with reverse polarity.

18. The apparatus of claim **1**, further comprising separate visual indicators configured to display the power on status of the apparatus, and the jump start boost power status of power supplied to said output port.

19. The apparatus of claim **1**, further comprising a manual override switch configured to activate a manual override mode to enable a user to connect jump start power to said output port when said vehicle battery isolation sensor is unable to detect presence of a vehicle battery.

20. The apparatus of claim **19**, wherein said microcontroller is configured to detect actuation of said manual override switch for at least a predetermined period of time before activation of said manual override mode.

21. The apparatus of claim **1**, further comprising a jumper cable device including a plug configured to plug into said output port, a pair of cables integrated with the plug at one respective end thereof and being configured to be connected to terminals of a battery at another respective end thereof.

22. The apparatus of claim **21**, wherein said jumper cable device further comprises a pair of ring terminals configured to respectively connect said pair of cables at said another end thereof with one of a battery terminal and a battery terminal clamp.

23. The apparatus of claim **21**, wherein said output port and said plug are dimensioned so that the plug will fit into the output port only in one specific orientation.

* * * * *