US 20140368155A1

(19) United States

(12) Patent Application Publication

CHEN

(10) Pub. No.: US 2014/0368155 A1

(43) Pub. Date: Dec. 18, 2014

(54) **SMART VEHICLE RESCUE BATTERY APPARATUS**

(71) Applicant: **MtTek Co., Ltd**, TaoYuan City (TW)

(72) Inventor: **Job CHEN**, TaoYuan City (TW)

(21) Appl. No.: **13/920,601**

(22) Filed: **Jun. 18, 2013**

Publication Classification

(51) **Int. Cl.**
B60R 16/033 (2006.01)

(52) **U.S. Cl.**
CPC ***B60R 16/033*** (2013.01)
USPC **320/104**; 307/9.1

(57) **ABSTRACT**

A smart vehicle rescue battery apparatus includes a battery unit, a first switch unit, a second switch unit, a third switch unit, a fourth switch unit, a control unit and a voltage polarity detection unit. The first switch unit and the fourth switch unit are turned on, when the connection between the first switch unit and the third switch unit is judged to be a positive pole and when the connection between the second switch unit and the fourth switch unit is judged to be a negative pole. The second switch unit and the third switch unit are turned on when the connection between the first switch unit and the third switch unit is judged to be the negative pole and when the connection between the second switch unit and the fourth switch unit is judged to be the positive pole.

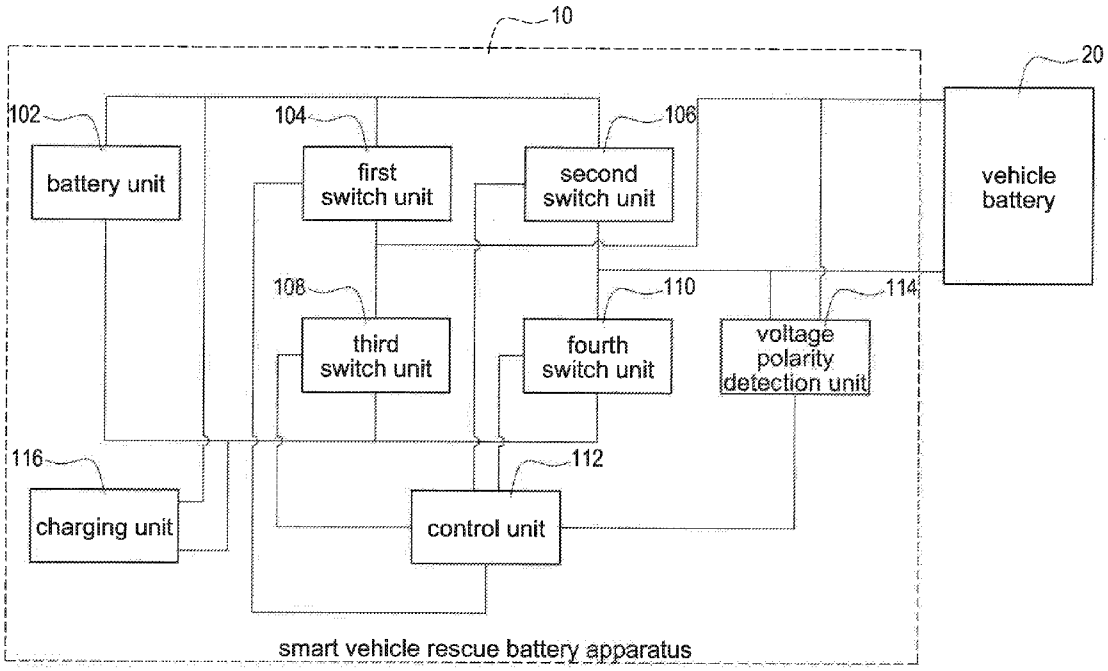

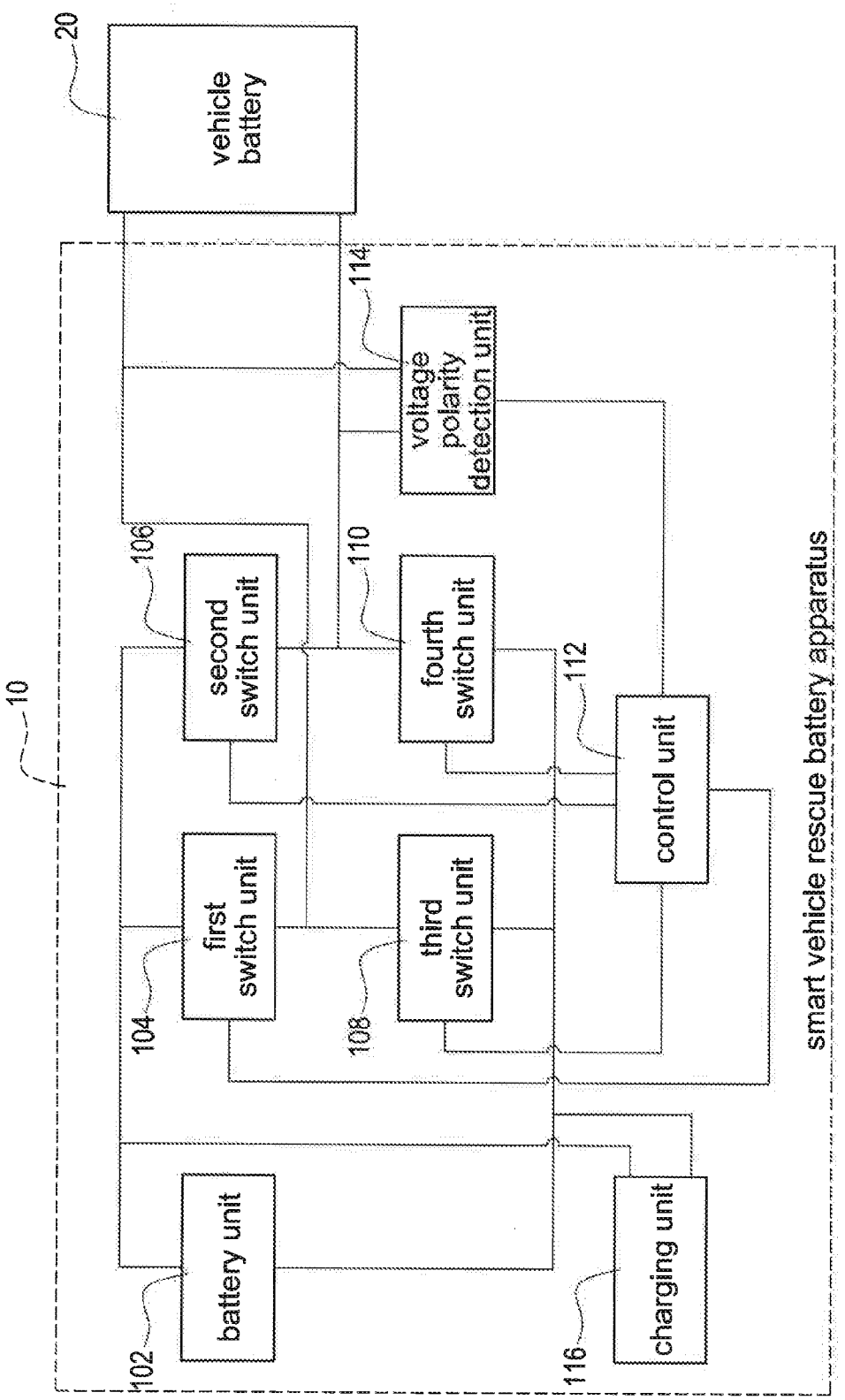
20
vehicle battery
10
114
voltage polarity detection unit
106
second switch unit
110
fourth switch unit
112
control unit
first switch unit
104
third switch unit
108
smart vehicle rescue battery apparatus
battery unit
102
charging unit
116

FIG.1

SMART VEHICLE RESCUE BATTERY APPARATUS

BACKGROUND OF THE INVENTION

[0001] 1. Field of the Invention

[0002] The present invention relates to a vehicle rescue battery apparatus and especially relates to a smart vehicle rescue battery apparatus.

[0003] 2. Description of the Related Art

[0004] The vehicle rescue battery is used to connect to the vehicle battery to start the vehicle engine urgently if the power of the vehicle battery is not enough to start the vehicle engine (for example, the vehicle engine has not been started for a long time).

[0005] Some users connect the vehicle rescue battery to the vehicle battery incorrectly (the connections of the polarities of the vehicle rescue battery and the vehicle battery are reversed) although the polarities of the vehicle rescue battery are indicated and marked with different colors. The vehicle computer will be damaged and the vehicle rescue battery will not supply power correctly if the connections of the polarities of the vehicle rescue battery and the vehicle battery are reversed.

SUMMARY OF THE INVENTION

[0006] In order to solve the above-mentioned problems, an object of the present invention is to provide a smart vehicle rescue battery apparatus.

[0007] In order to achieve the object of the present invention mentioned above, the smart vehicle rescue battery apparatus is applied to a vehicle battery. The smart vehicle rescue battery apparatus includes a battery unit, a first switch unit, a second switch unit, a third switch unit, a fourth switch unit, a control unit and a voltage polarity detection nit. The first switch unit is electrically connected to the battery unit and the vehicle battery. The second switch unit is electrically connected to the battery unit, the first switch unit and the vehicle battery. The third switch unit is electrically connected to the battery unit, the first switch unit and the vehicle battery. The fourth switch unit is electrically connected to the battery unit, the second switch unit, the third switch unit and the vehicle battery. The control unit is electrically connected to the first switch unit, the second switch unit, the third switch unit and the fourth switch unit. The voltage polarity detection unit is electrically connected to the first switch unit, the second switch unit, the third switch unit, the fourth switch unit, the vehicle battery and the control unit. The voltage polarity detection unit is configured to detect the voltage polarity of the vehicle battery and inform the control unit. The control unit is configured to turn on the first switch unit and the fourth switch unit and turn off the second switch unit and the third switch unit, when the polarity of a contact connecting the first switch unit, the third switch unit and the vehicle battery is judged to be a positive pole and when the polarity of a contact connecting the second switch unit, the fourth switch unit and the vehicle battery is judged to be a negative pole. The control unit is configured to turn on the second switch unit and the third switch unit and turn off the first switch unit and the fourth switch unit, when the polarity of the contact connecting the first switch unit, the third switch unit and the vehicle battery is judged to be the negative pole and when the polarity of the contact connecting the second switch unit, the fourth switch unit and the vehicle battery is judged to be the positive pole.

[0008] Moreover, the battery unit is a storage battery.

[0009] Moreover, the first switch unit is, for examples but not limited to, a metal oxide semiconductor field effect transistor, a bipolar junction transistor, an insulation gate bipolar transistor, or a silicon controlled rectifier.

[0010] Moreover, the second switch unit is, for examples but not limited to, a metal oxide semiconductor field effect transistor, a bipolar junction transistor, an insulation gate bipolar transistor, or a silicon controlled rectifier.

[0011] Moreover, the third switch unit is, for examples but not limited to, a metal oxide semiconductor field effect transistor, a bipolar junction transistor, an insulation gate bipolar transistor, or a silicon controlled rectifier.

[0012] Moreover, the fourth switch unit is, for examples but not limited to, a metal oxide semiconductor field effect transistor, a bipolar junction transistor, an insulation gate bipolar transistor, or a silicon controlled rectifier.

[0013] Moreover, the control unit is, for examples but not limited to, a microprocessor, a microcontroller, or a control circuit having an integrated circuit and electronic components.

[0014] Moreover, the voltage polarity detection unit is, for examples but not limited to, a microprocessor, a microcontroller, or a voltage polarity detection apparatus having electronic components.

[0015] Moreover, the smart vehicle rescue battery apparatus further includes a charging unit. The charging unit is electrically connected to the first switch unit, the second switch unit, the third switch unit, the fourth switch unit and the battery unit.

BRIEF DESCRIPTION OF DRAWING

[0016] FIG. **1** shows a block diagram of the smart vehicle rescue battery apparatus of the present invention.

DETAILED DESCRIPTION OF THE INVENTION

[0017] FIG. **1** shows a block diagram of the smart vehicle rescue battery apparatus of the present invention. A smart vehicle rescue battery apparatus **10** is applied to a vehicle battery **20**. The smart vehicle rescue battery apparatus **10** is used to connect to the vehicle battery **20** to start a vehicle engine (not shown in FIG. **1**) if the power of the vehicle battery **20** is not enough to start the vehicle engine

[0018] The smart vehicle rescue battery apparatus **10** includes a battery unit **102**, a first switch unit **104**, a second switch unit **106**, a third switch unit **108**, a fourth switch unit **110**, a control unit **112**, a voltage polarity detection unit **114** and a charging unit **116**.

[0019] The first switch unit **104** is electrically connected to the battery unit **102** and the vehicle battery A. The second switch unit **106** is electrically connected to the battery unit **102**, the first switch unit **104** and the vehicle battery **20**. The third switch unit **108** is electrically connected to the battery unit **102**, the first switch unit **104** and the vehicle battery **20**. The fourth switch unit **110** is electrically connected to the battery unit **102**, the second switch unit **106**, the third switch unit **108** and the vehicle battery **20**. The control unit **112** is electrically connected to the first switch unit **104**, the second switch unit **106**, the third switch unit **108**, the fourth switch unit **110** and the voltage polarity detection unit **114**. The

voltage polarity detection unit **114** is electrically connected to the first switch unit **104**, the second switch unit **106**, the third switch unit **108**, the fourth switch unit **110**, the vehicle battery **20** and the control unit **112**. The charging unit **116** is electrically connected to the first switch unit **104**, the second switch unit **106**, the third switch unit **108**, the fourth switch unit **110** and the battery unit **102**.

[0020] The voltage polarity detection unit **114** is configured to detect the voltage polarity of the vehicle battery **20** and inform the control unit **112**.

[0021] The control unit **112** is configured to turn on the first switch unit **104** and the fourth switch unit **110** and turn off the second switch unit **106** and the third switch unit **108**, when the polarity of a contact connecting the first switch unit **104**, the third switch unit **108** and the vehicle battery **20** is judged to be a positive pole and when the polarity of a contact connecting the second switch unit **106**, the fourth switch unit **110** and the vehicle battery **20** is judged to be a negative pole.

[0022] The control unit **112** is configured to turn on the second switch unit **106** and the third switch unit **108** and turn off the first switch unit **104** and the fourth switch unit **110**, when the polarity of the contact connecting the first switch unit **104**, the third switch unit **108** and the vehicle battery **20** is judged to be the negative pole and when the polarity of the contact connecting the second switch unit **106**, the fourth switch unit **110** and the vehicle battery **20** is judged to be the positive pole.

[0023] Moreover, the battery unit **102** is a storage battery. The control unit **112** is, for examples but not limited to, a microprocessor, a microcontroller, or a control circuit having an integrated circuit and electronic components. The voltage polarity detection unit **114** is, for examples but not limited to, a microprocessor, a microcontroller, or a voltage polarity detection apparatus having electronic components.

[0024] The first switch unit **104** is, for examples but not limited to, a metal oxide semiconductor field effect transistor, a bipolar junction transistor, an insulation gate bipolar transistor, or a silicon controlled rectifier.

[0025] The second switch unit **106** is, for examples but not limited to, a metal oxide semiconductor field effect transistor, a bipolar junction transistor, an insulation gate bipolar transistor, or a silicon controlled rectifier.

[0026] The third switch unit **108** is, for examples but not limited to, a metal oxide semiconductor field effect transistor, a bipolar junction transistor, an insulation gate bipolar transistor, or a silicon controlled rectifier.

[0027] The fourth switch unit **110** is, for examples but not limited to, a metal oxide semiconductor field effect transistor, a bipolar junction transistor, an insulation gate bipolar transistor, or a silicon controlled rectifier.

[0028] The efficiency of the smart vehicle rescue battery apparatus **10** of the present invention is that a vehicle computer (not shown in FIG. **1**) will not be damaged and the smart vehicle rescue battery apparatus **10** will supply power correctly even if the connections of the polarities of the smart vehicle rescue battery apparatus **10** and the vehicle battery **20** are reversed.

[0029] Although the present invention has been described with reference to the preferred embodiment thereof, it will be understood that the invention is not limited to the details thereof. Various substitutions and modifications have been suggested in the foregoing description and others will occur to those of ordinary skill in the art. Therefore, all such substitutions and modifications are intended to be embraced within the scope of the invention as defined in the appended claims.

What is claimed is:

1. A smart vehicle rescue battery apparatus applied to a vehicle battery, the smart vehicle rescue battery apparatus including:

a battery unit;

a first switch unit electrically connected to the battery unit and the vehicle battery;

a second switch unit electrically connected to the battery unit, the first switch unit and the vehicle battery;

a third switch unit electrically connected to the battery unit, the first switch unit and the vehicle battery;

a fourth switch unit electrically connected to the battery unit, the second switch unit, the third switch unit and the vehicle battery;

a control unit electrically connected to the first switch unit, the second switch unit, the third switch unit and the fourth switch unit; and

a voltage polarity detection unit electrically connected to the first switch unit, the second switch unit, the third switch unit, the fourth switch unit, the vehicle battery and the control unit,

wherein the voltage polarity detection unit is configured to detect the voltage polarity of the vehicle battery and inform the control unit; the control unit is configured to turn on the first switch unit and the fourth switch unit and turn off the second switch unit and the third switch unit, when the polarity of a contact connecting the first switch unit, the third switch unit and the vehicle battery is judged to be a positive pole and when the polarity of a contact connecting the second switch unit, the fourth switch unit and the vehicle battery is judged to be a negative pole;

wherein the control unit is configured to turn on the second switch unit and the third switch unit and turn of the first switch unit and the fourth switch unit, when the polarity of the contact connecting the first switch unit, the third switch unit and the vehicle battery is judged to be the negative pole and when the polarity of the contact connecting the second switch unit, the fourth switch unit and the vehicle battery is judged to be the positive pole.

2. The smart vehicle rescue battery apparatus in claim **1**, wherein the battery unit is a storage battery.

3. The smart vehicle rescue battery apparatus in claim **1**, wherein the first switch unit is a metal oxide semiconductor field effect transistor, a bipolar junction transistor, an insulation gate bipolar transistor, or a silicon controlled rectifier.

4. The smart vehicle rescue battery apparatus in claim **1**, wherein the second switch unit is a metal oxide semiconductor field effect transistor, a bipolar junction transistor, an insulation gate bipolar transistor, or a silicon controlled rectifier.

5. The smart vehicle rescue battery apparatus in claim **1**, wherein the third switch unit is a metal oxide semiconductor field effect transistor, a bipolar junction transistor, an insulation gate bipolar transistor, or a silicon controlled rectifier.

6. The smart vehicle rescue battery apparatus in claim **1**, wherein the fourth switch unit is a metal oxide semiconductor field effect transistor, a bipolar junction transistor, an insulation gate bipolar transistor, or a silicon controlled rectifier.

7. The smart vehicle rescue battery apparatus in claim **1**, further including a charging unit electrically connected to the

first switch unit, the second switch unit, the third switch unit, the fourth switch unit and the battery unit.

8. The smart vehicle rescue battery apparatus in claim **1**, wherein the control unit is a microcontroller or a microprocessor.

9. The smart vehicle rescue battery apparatus in claim **1**, wherein the control unit is a control circuit having an integrated circuit and electronic components.

10. The smart vehicle rescue battery apparatus in claim **1**, wherein the voltage polarity detection unit is a microprocessor, a microcontroller, or a voltage polarity detection apparatus having electronic components.

* * * * *