United States Patent [19]

Wright

[11] **4,366,430**

[45] **Dec. 28, 1982**

[54] **BATTERY BOOSTER CABLE ASSEMBLY**

[75] Inventor: **Bruce R. Wright**, St. Louis, Mo.

[73] Assignee: **Associated Equipment Corporation**, St. Louis, Mo.

[21] Appl. No.: **372,958**

[22] Filed: **Apr. 29, 1982**

Related U.S. Application Data

[63] Continuation of Ser. No. 191,531, Sep. 29, 1980, abandoned.

[51] **Int. Cl.**[3] **H02J 7/00**; H01R 11/00

[52] **U.S. Cl.** ..... **320/25**; 339/29 B

[58] **Field of Search** ..... 307/10 R, 10 BP, 130; 191/12 R; 320/25; 339/29 B, 29 R

[56] **References Cited**

U.S. PATENT DOCUMENTS

4,163,134 7/1979 Budrose ..... 339/29 B X

4,238,722 12/1980 Ford ..... 339/29 B X

Primary Examiner—Michael L. Gellner

Attorney, Agent, or Firm—Cohn, Powell & Hind

[57] **ABSTRACT**

A battery booster cable assembly includes a pair of booster wires. Each booster wire has first and second ends with a first pair of battery clamps attached to the first ends of the booster wires and the second pair of battery clamps attached to the second end of the booster wires. A switch selectively electrically interconnects the first and second ends of one of the booster wires. A voltage detector is responsive to voltage across the switch for determining if the voltage is greater or less than a predetermined value. A red LED indicates when the detected voltage is greater than the predetermined value, while a green LED indicates when the detected voltage is less than the predetermined value. A solenoid-actuated plunger selectively precludes actuation of the switch when the detected voltage is greater than the predetermined value. The switch and the red and green LED's are carried by a housing which includes two portions selectively slidable between first and second positions. In the first position, the switch is open and the LED's are in view, while in the second position the switch is closed and the LED's are hidden from view.

12 Claims, 6 Drawing Figures

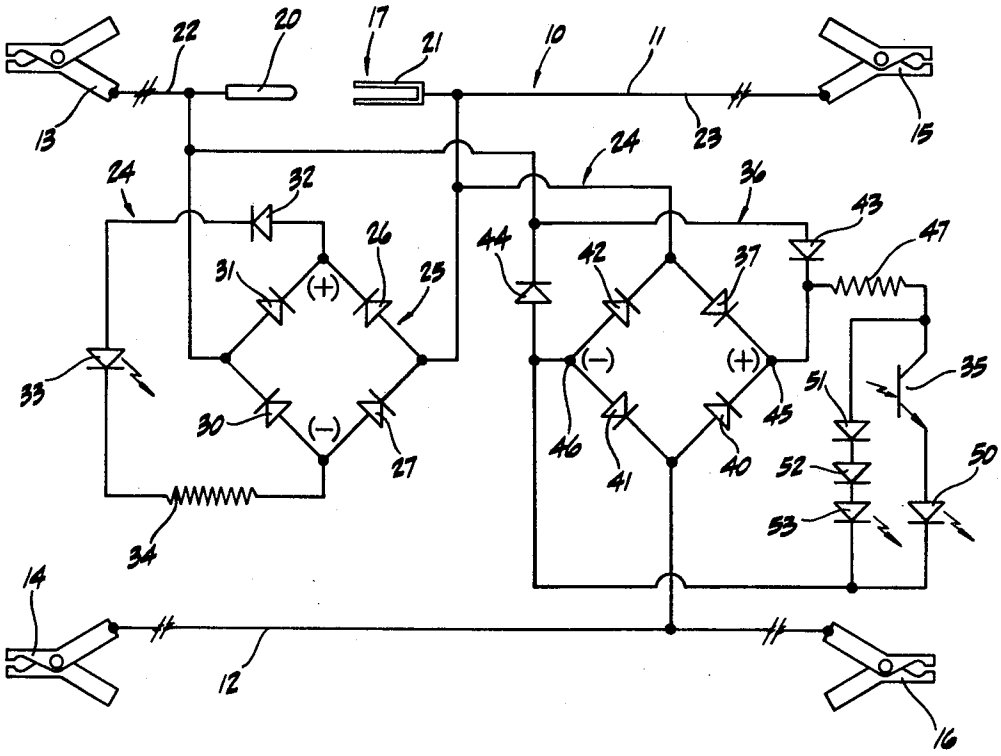

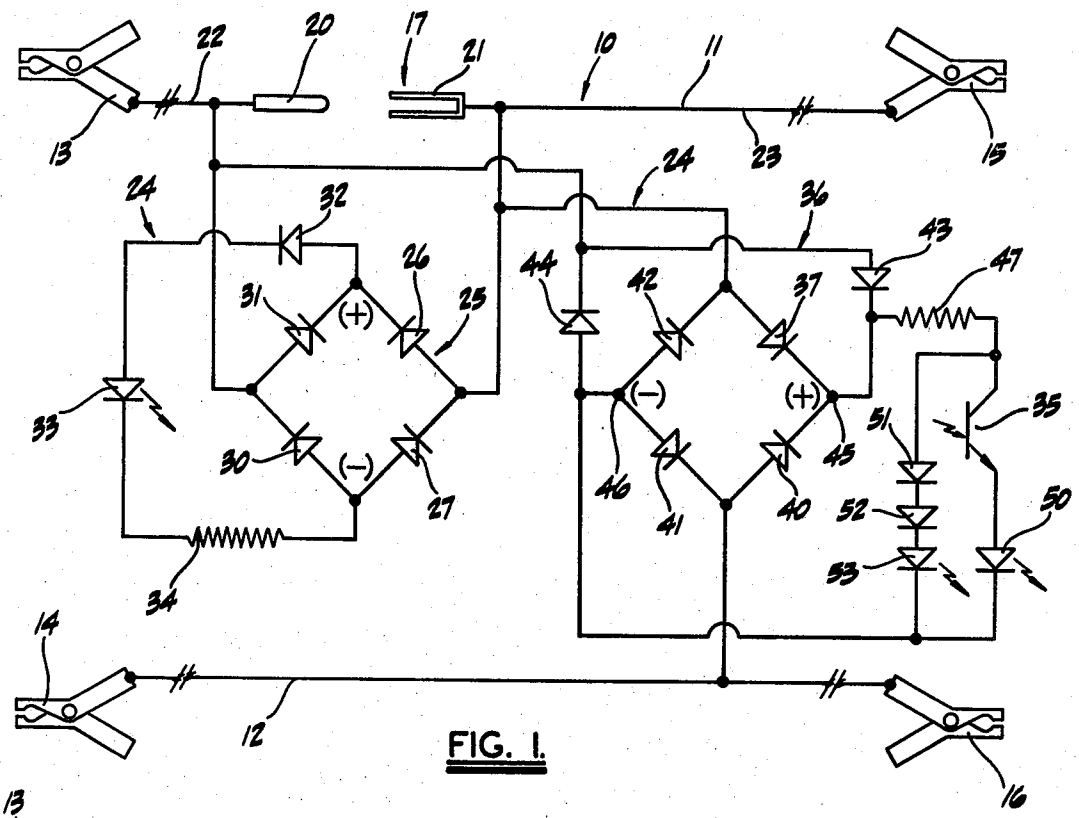
10
11
12
13
14
15
16
17
20
21
22
23
24
25
26
27
30
31
32
33
34
35
36
37
40
41
42
43
44
45
46
47
50
51
52
53
(+)
(−)

FIG. 1.

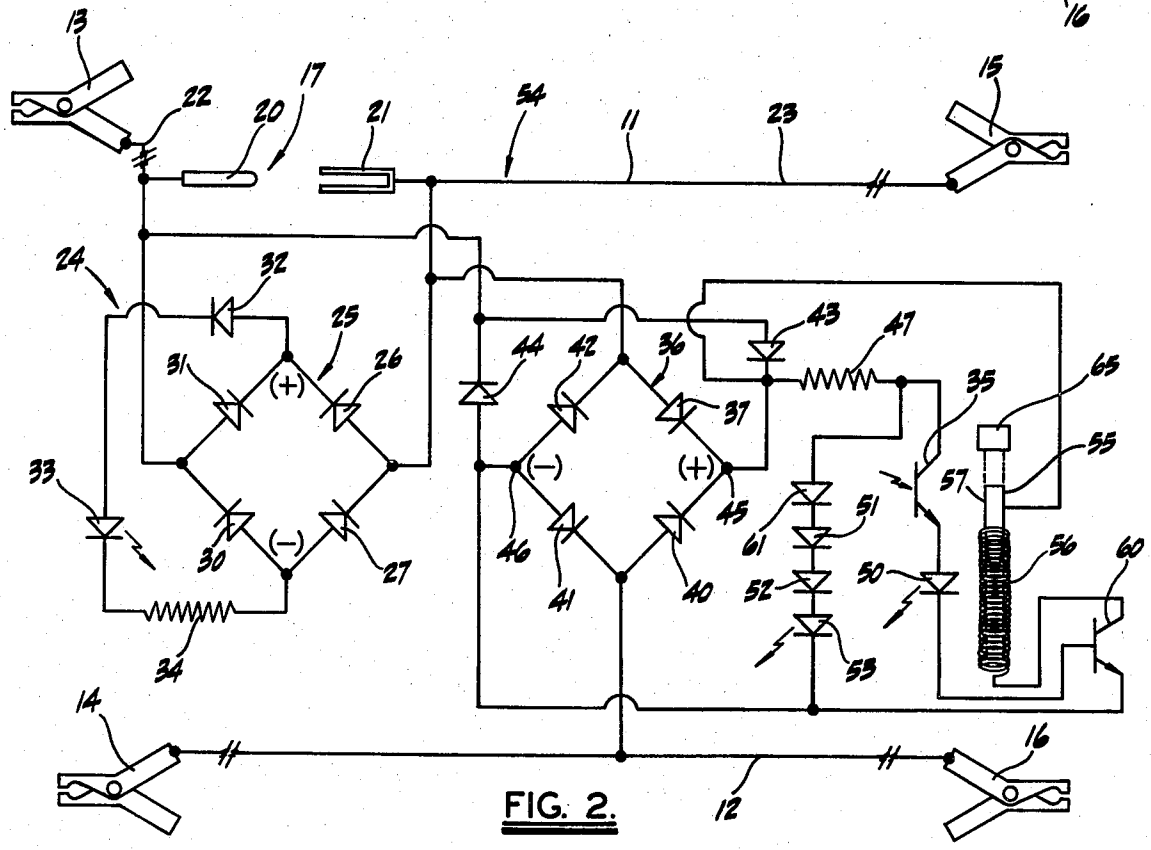
11
12
13
14
15
16
17
20
21
22
23
24
25
26
27
30
31
32
33
34
35
36
37
40
41
42
43
44
45
46
47
50
51
52
53
54
55
56
57
60
61
65
(+)
(−)

FIG. 2.

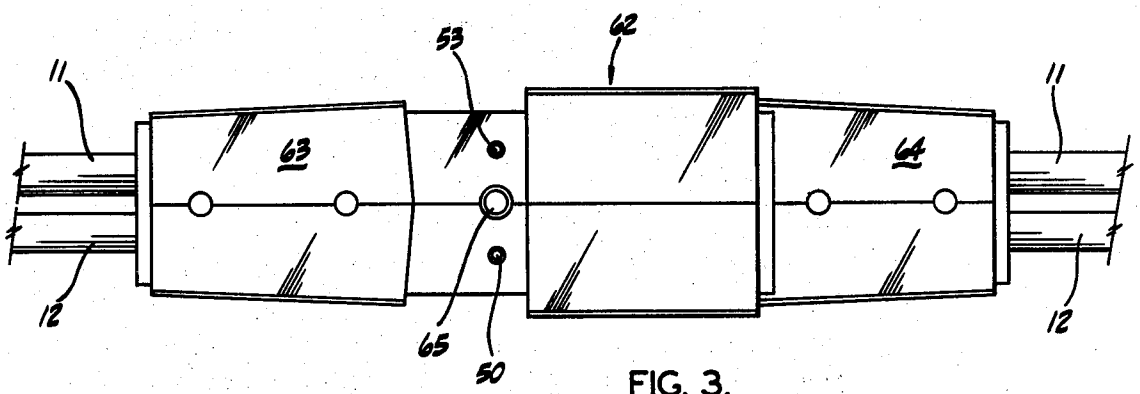

FIG. 3.

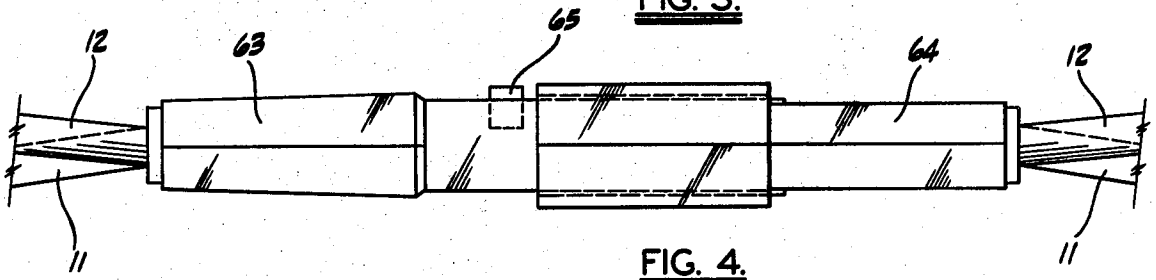

FIG. 4.

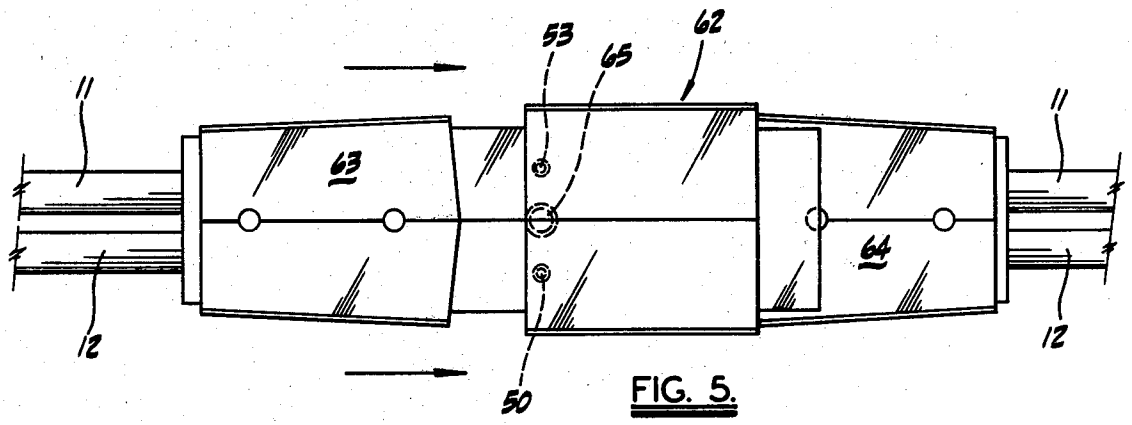

FIG. 5.

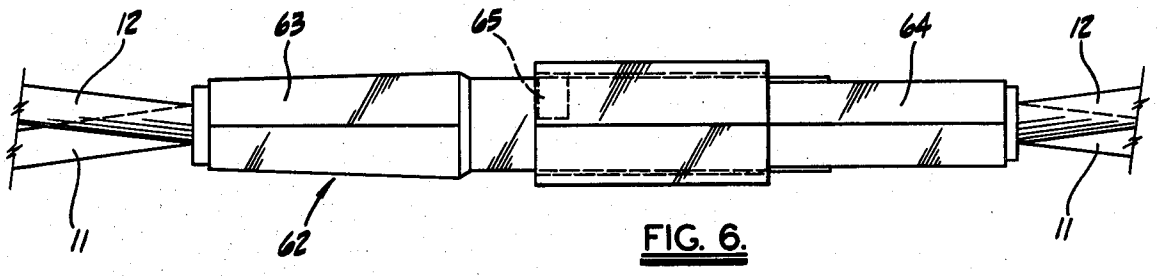

FIG. 6.

BATTERY BOOSTER CABLE ASSEMBLY

This application is a continuation, of application Ser. No. 191,531, filed Sept. 29, 1980, now abandoned.

BACKGROUND OF THE INVENTION

This invention relates to battery booster cable assemblies in general, and particularly to a battery booster cable assembly having voltage and polarity detecting means.

Booster cables are used for starting vehicles which have partially discharged batteries, and are therefore not capable of starting the vehicles themselves. Typically, a booster cable is attached to an adequately charged battery and to the partially discharged battery of the vehicle to be started. Because gases discharged by batteries are highly explosive, it is important that sparks not occur in the vicinity of the batteries. It is also important that proper polarity of connection be observed when connecting booster cables because an improper connection of booster cables can result in extremely high flow of electrical current and possible generation of explosive gases within a battery. Likewise, the connection of a battery of a different voltage can also result in excessive current flow. Many times the determination of the polarity of the battery requires very close inspection of the battery, and a mistake can be made in the connection of the booster cables and possible subsequent explosion of the battery.

SUMMARY OF THE INVENTION

This battery booster cable assembly includes means for determining the differences in voltages of the batteries as connected to the cables for indicating the polarity of connection of the booster cables, and for determining that the batteries are the same voltage, and includes switch means for making the final electrical connection between the batteries at a point remote from either battery, thereby minimizing the possibility of battery explosion. Since the final electrical connection is not made at the battery clamp, the clamps can all be attached directly to battery terminals for better electrical connection of the good battery to electrical system of the vehicle being boosted.

The battery booster cable assembly for interconnecting batteries includes a pair of booster wires, each having first and second ends. A pair of battery clamps, constituting first battery attachment means, are connected to the first ends of the booster wires, while a second pair of battery clamps, constituting second battery attachment means, are connected to the second ends of the booster wires.

A sliding switch, constituting switch means, is connected to one of the booster wires for selectively interconnecting the first and second ends of the one booster wire. The switch means is provided so that the final electrical connection of the booster cables can be made at a point remote from the battery clamps and battery terminals.

A voltage-detecting means is responsive to voltage across the switch means for determining if said voltage is greater or less than a predetermined value.

In one aspect of the invention, an indicating means is operatively connected to the voltage-detecting means, and includes a red light-emitting diode (LED), constituting first light means, for indicating when said detected voltage is greater than the predetermined value.

The indicating means includes a green light-emitting diode (LED), constituting second light means, for indicating when the detected voltage is less than the predetermined value.

In another aspect of the invention, the voltage-detecting means includes a diode bridge circuit connected across the switch means and a voltage-magnitude detector means connected to the diode bridge circuit. In another aspect of the invention, the voltage magnitude detector means includes a first light-emitting diode. A diode means interconnects the first light-emitting diode and the diode bridge circuit for establishing the predetermined voltage required to actuate the first light-emitting diode.

In yet another aspect of the invention, optical means including the first light-emitting diode and a photo-transistor operatively interconnect the voltage magnitude detector means and the indicating means.

In one aspect of the invention, a second diode bridge circuit is operatively connected to the first and second booster wires for providing a proper polarity operating voltage to the indicating means.

In one aspect of the invention, housing means includes first and second portions interconnected in a sliding relation so as to be selectively slidable between first and second positions. The housing means carries the switch means with selective sliding of the first and second housing portions actuating the switch means. The switch means is open when the housing portions are in the first position and closed when the housing portions are in the second position.

The indicating means is carried by the housing means, and are within view when the housing portions are in the first position and is hidden from view when the housing portions are in the second position.

In another aspect of the invention, the indicating means includes lockout means for preventing selective movement of the housing portions from the first to second positions when the detected voltage is greater than the predetermined value. In yet another aspect of the invention, the lockout means is a solenoid-actuated plunger.

BRIEF DESCRIPTION OF THE DRAWINGS

FIG. **1** is an electrical schematic view of the battery booster cable assembly;

FIG. **2** is an electrical schematic view of a modified battery booster cable assembly;

FIG. **3** is a top plan view of the housing portions shown in the first open position;

FIG. **4** is a side elevational view of the housing portions of FIG. **3**;

FIG. **5** is a top plan view of the housing portions shown in the closed second position; and

FIG. **6** is a side elevational view of the housing portions of FIG. **5**.

DESCRIPTION OF THE PREFERRED EMBODIMENT

Referring now by characters of reference to the drawings and first to FIG. **1**, it will be understood that the battery booster cable assembly indicated generally by **10** includes a pair of booster wires **11** and **12**. Battery clamps **13** and **14** constituting first battery attachment means are connected to first ends of the booster wires **11** and **12**, while battery clamps **15** and **16** constituting second battery attachment means are connected to second ends of booster wires **11** and **12**.

A switch **17**, constituting switch means, is attached to the booster wire **11**. The switch **17** includes a plug portion **20** and a plug-receiving jack **21**. The plug portion **20** is connected to a first portion **22** of the booster wire **11**, while the plug-receiving jack **21** is connected to a second portion **23** of the booster wire **11**. The plug portion **20** is selectively received by the plug-receiving jack **21** for electrically interconnecting the first and second portions **22** and **23** of the booster wire **11**.

Voltage-detecting means, indicated generally by **24**, are operatively connected across the switch **17**. The voltage-detecting means **24** includes a first diode bridge circuit **25** composed of diodes **26**, **27**, **30** and **31**. The input of the diode bridge circuit **25** is connected across the switch **17**. Serially connected, across the output of the diode bridge circuit **25** is a voltage magnitude detector means including a diode **32** constituting diode means, a light-emitting diode **33** and a voltage-dropping resistor **34**. The light-emitting diode **33** is optically coupled to a photo-transistor **35**.

A second diode bridge means, indicated generally by **36**, includes diodes **37** and **40–44**. The positive output of the diode bridge means **36** is at node **45**, while the negative output is at node **46**. The diodes **37**, **40–42** provide a bridge circuit connected between booster wire **12** and the second portion **23** of the booster wire **11**. The diodes **40–41**, **43–44**, provide a bridge circuit connected between the booster wire **12** and the first portion **22** of the booster wire **11**. When the switch **17** is closed to interconnect the first and second portions **22** and **23** of the booster wire **11**, the diodes **37** and **43** are connected in parallel, while the diodes **42** and **44** are also connected in parallel, said parallel connector diodes and the diodes **40** and **41** providing a bridge circuit connected between the booster wires **11** and **12**.

Operatively, serially connected across the output of the second diode bridge means **36** is indicating means including voltage-dropping resistor **47**, the photo-transistor **35** and a red LED **50** providing a first light means. Also, operatively, serially connected across the output of the second diode bridge means **36** are the voltage-dropping resistor **47**, diodes **51** and **52** constituting second diode means, and a green LED **53** providing a second light means.

Referring now to FIG. **2** in which similar components are given the same reference numerals as in FIG. **1**, a modified battery booster cable assembly **54** is disclosed. A solenoid **55**, constituting lock-out means, includes a coil **56** and a plunger **57**. The solenoid coil **56** is serially connected with a switching transistor **60** across the nodes **45** and **46** of the second diode bridge means **36**.

The resistor **47**, photo-transistor **35** and red LED **50** serially interconnect the node **45** and the base of the switching transistor **60** for controlling current flow through the switching transistor **60** for actuating the solenoid **55**. The second diode means comprising diodes **51** and **52** include an additional diode **61** serially connected with the green LED **53**.

Referring now to FIGS. **3–6**, a housing means **62** is carried by the booster wires **11** and **12**. The housing means **62** includes a first portion **63** and a second portion **64** in sliding relation. The first and second housing portions **63** and **64** are selectively slidable between a first open position disclosed in FIGS. **3** and **4** and a second closed position disclosed in FIGS. **5** and **6**. The switch **17** is included within the housing means **62**, the switch **17** being open when the housing portions **63** and **64** are in the first position and closed when the housing portions **63** and **64** are in the second position.

The red and green LED's **50** and **53** being in view when the housing portions **63** and **64** are in the first position and are hidden from view when the housing portions **63** and **64** are in the second position.

A lock-out button **65** is provided in the housing portion **63**. The button **65** must be depressed in order to move the housing portions **63** and **64** from the first to the second positions.

It is thought that the structural features and functional advantages of the battery booster cable assembly have become apparent from the foregoing description of parts, but for completeness of disclosure a brief description of the operation and the use of the battery booster cable assembly will be given.

Referring first to FIG. **1**, the battery booster cable assembly **10** is designed for selectively interconnecting a first and a second battery (not shown). With the switch **17** in an open position, one of the pairs of battery clamps **13** and **14** or **15** and **16** is connected to a first battery. Since the other pair of battery clamps is, as of yet, not connected there will be no voltage applied to the diode bridge circuit **25** and consequently, the light-emitting diode **33** will not light.

The voltage of the first battery will be applied to the second diode bridge circuit means **36**. The diode bridge circuit means **36** provides a positive voltage from the first battery at node **45** and a negative voltage at node **46** regardless of whether the booster wire **12** is connected to the battery positive terminal and the booster wire **11** is connected to the battery negative terminal or whether the booster wire **11** is connected to the battery positive terminal and the booster wire **12** is connected to the battery negative terminal. The output voltage, from the diode bridge circuit means **36**, is supplied through the dropping resistor **47** for actuating the red or green LED's **50** and **53**. Since the LED **33** is not actuated, the photo-transistor **35** will not turn on and the red LED **50** will not light. The green LED **53** will light under these conditions.

Next, the second battery is connected to the other set of the battery clamps. At this time, the voltage appearing across the switch **17** will depend upon the polarity of connection of the two batteries. If the battery clamps **14** and **16** are both connected to battery positive terminals, and the battery clamps **13** and **15** are connected to the battery negative terminals, the batteries are properly connected for polarity. Likewise, if the battery clamps **13** and **15** are connected to the battery positive terminals, and the battery clamps **14** and **16** are connected to the battery negative terminals, the batteries are again properly connected for polarity.

When the batteries are properly connected for polarity, the voltage appearing across the switch **17** is equal to the difference in the voltages of the two batteries. However, if the batteries are connected improperly for polarity, that is, the battery clamps **13** and **16** being connected to positive battery terminals and the battery clamps **14** and **15** being connected to the negative battery terminals or the battery clamps **14** and **15** being connected to the positive battery terminals and the battery clamps **13** and **16** being connected to the negative battery terminals, then the voltage appearing across the switch **17** will be equal to the sum of the voltages of the batteries.

The polarity of the voltage appearing across the switch **17** depends upon the connection of the batteries.

The voltage appearing across the switch **17** is applied through the bridge circuit means **25** to the LED **33**. The first diode means **32** is provided for predetermining the value of voltage across the switch **17** required for actuating the LED **33**, as for example five (5) volts. The first diode means **32** provides a predetermined voltage drop in series with the LED **33**.

If the batteries are properly connected for polarity and are of approximately the same voltage, there will be insufficient voltage applied to the LED **33** to actuate the LED **33** for turning on the photo-transistor **35**. However, if the batteries are connected improperly for polarity or if there is a large difference in the battery voltages, such as when connecting a 12 volt battery to a 6 volt battery or a good battery to a completely discharged battery, the voltage output from the diode bridge **25** will be sufficient for actuating the LED **33** and turning on the photo-transistor **35**.

With both batteries connected and the switch **17** open, the higher of the two battery voltages will effectively be the voltage supplied from the second diode bridge circuit means **36**. If the LED **33** has not been actuated for actuating the phototransistor **35**, the red LED **50** will not light and the green LED **53** will remain lighted. This condition indicates proper connection of the battery clamps, and the switch **17** can then be closed for effectuating the interconnection of the two batteries. However, if the voltage across the switch **17** is sufficient to actuate the LED **33** due either to a mismatch polarity of batteries or a mismatch in battery voltages, the photo-transistor **35** will be actuated and thereby turn on the red LED **50**.

When the red LED **50** is conducting, the voltage appearing across the diodes **51**, **52** and green LED **53** will not be sufficient to actuate the green LED **53** due to the voltage drops introduced by the diodes **51** and **52**, which are the second diode means. Therefore the green LED **53** will not be actuated whenever the red LED **50** is actuated.

If the red LED **50** is actuated when the clamps are all connected to the batteries, one pair of the clamps **13** and **14** or **15** and **16** should be reversed in their connection to their associated battery in order to obtain proper polarity of connection. If this reversal does not cause the green LED **53** to light, then a possible hazardous condition such as mismatched battery voltages or a completely dead battery is indicated thereby requiring careful inspection of the polarity and voltages of the batteries.

When the green LED **53** is on, with the battery clamps all connected, the final electrical connection between the batteries can be made by closing the switch **17**. Since the switch **17** is located remotely from the batteries, the danger of an arc at the switch **17** which could ignite explosive battery gases is eliminated. When it is desired to disconnect the battery booster cable assembly **10** from the batteries, the switch **17** is first opened so that any arcing that might occur on opening of the switch **17** occurs away from the batteries. The battery clamps **13–16** can then be safely disconnected.

Referring now to FIGS. **3–6**, it will be seen that the red and green LED's **50** and **53** are only visible when the housing portions **63** and **64** are in the first position and the switch **17** is open. Therefore in order to utilize the indicating LED's **50** and **53** the user is forced to open the switch **17** in order to view the LED's **50** and **53**, therefore assuring that the switch **17** is open before the battery clamps **13–16** are attached to the batteries.

The button **65** must be manually depressed before the housing portions **63** and **64** can be moved to the second position for closing the switch **17**. The button **65** is provided for preventing inadvertent sliding of the portions **63** and **64** together, which would close switch **17**.

The battery booster cable assembly **54** of FIG. **2** operates similarly to the battery booster cable assembly **10**. However it contains an electrically actuated solenoid lockout **55** for preventing the button **65** from being depressed for closing the housing portions **63** and **64** when a dangerous condition is indicated by the lighting of the red LED **50**.

The output of the second diode bridge means **36** is applied to the solenoid coil **56** through the switching transistor **60**. The red LED **50** is serially connected to the base of the switching transistor **60** for turning on the switching transistor **60** whenever the red LED **50** is actuated by the photo-transistor **35**. Because a base to emitter voltage drop in the switching transistor **60** has been serially connected with the red LED **50**, the second diode means includes an additional diode **61** which is serially connected with the green light-emitting diode **53** to provide an additional voltage drop in series with the green light-emitting diode **53** to assure that there will be insufficient voltage for lighting the green LED **53** whenever the red LED **50** is on. The solenoid plunger **57** selectively engages the button **65** for retaining the button **65** is an up position, thereby preventing manual closing of the housing portions **63** and **64** when the switching transistor **60** is turned on.

I claim as my invention:

1. A battery booster cable assembly, comprising:

(a) a pair of booster wires, each booster wire having first and second ends,

(b) first battery attachment means connected to the first ends of the booster wires,

(c) second battery attachment means connected to the second ends of the booster wires,

(d) indicating means including light means responsive to voltages applied to the booster wires,

(e) switch means connected to one of the booster wires for selectively electrically interconnecting the first and second ends of said one booster wire,

(f) housing means including first and second portions interconnected in a sliding relation, so as to be selectively slidable between a first position and a second position, and

(g) the housing means carrying the switch means and actuating the switch means upon selectively sliding the housing portions between the first and second positions, the switch means being open when the housing portions are in the first position and closed when the housing portions are in the second position.

2. A battery booster cable assembly as defined in claim **1**, in which:

(h) the light means is carried by the housing means, the light means being in view when the housing portions are in said first position, and hidden from view when the housing portions are in said second position.

3. A battery booster cable assembly as defined in claim **1**, in which:

(h) a voltage-detecting means is responsive to voltage across the switch means for determining if said voltage is greater or less than a predetermined value, and

(i) a lockout means is actuated by the voltage-detecting means for preventing selective movement of the housing portions from the first to second positions

when said detected voltage is greater than said predetermined value.

4. A battery booster cable assembly as defined in claim 3, in which:

(j) the lockout means is a solenoid-actuated plunger.

5. A battery booster cable assembly, comprising:

(a) a pair of booster wires, each booster wire having first and second ends,

(b) first battery attachment means connected to the first ends of the booster wires,

(c) second battery attachment means connected to the second ends of the booster wires,

(d) switch means connected to one of the booster wires for selectively electrically interconnecting the first and second ends of said booster wire, and

(e) voltage-detecting means, connected across the switch means for directly measuring the voltage across the switch means for determining if the magnitude of said measured voltage is greater or less than a predetermined value.

6. A battery booster cable assembly as defined in claim 5, in which:

(f) an indicating means, operatively connected to the voltage-detecting means, includes a first light means for indicating when the magnitude of said detected voltage across the switch is greater than the said predetermined value.

7. A battery booster cable assembly as defined in claim 6, in which:

(g) the indicating means includes a second light means for indicating when the magnitude of said detected voltage across the switch is less than said predetermined value.

8. A battery booster cable assembly, comprising:

(a) a pair of booster wires, each booster wire having first and second ends,

(b) first battery attachment means connected to the first ends of the booster wires,

(c) second battery attachment means connected to the second ends of the booster wires,

(d) switch means connected to one of the booster wires for selectively electrically interconnecting the first and second ends of said one booster wire,

(e) voltage-detecting means, responsive to voltage across the switch means for determining if said voltage is greater or less than a predetermined value, and

(f) a lockout means operatively connected to the voltage-detecting means for selectively precluding actuation of the switch means when said detected voltage is greater than said predetermined value.

9. A battery booster cable assembly, comprising:

(a) a pair of booster wires, each booster wire having first and second ends,

(b) first battery attachment means connected to the first ends of the booster wires,

(c) second battery attachment means connected to the second ends of the booster wires,

(d) switch means connected to one of the booster wires for selectively electrically interconnecting the first and second ends of said one booster wire,

(e) voltage-detecting means, responsive to voltage across the switch means for determining if said voltage is greater or less than a predetermined value,

(f) the voltage-detecting means including:

(1) a diode bridge circuit connected across the switch means, and

(2) a voltage magnitude detector means connected to the diode bridge circuit,

(g) an indicating means operatively connected to the voltage magnitude detector means,

(h) the voltage magnitude detector means including a first light-emitting diode, and

(i) the indicating means including a photo-transistor which is actuated by the first light-emitting diode.

10. A battery booster cable assembly as defined in claim 9, in which:

(j) the indicating means includes a second light-emitting diode connected to and actuated by the photo-transistor for indicating when said detected voltage is greater than the said predetermined value.

11. A battery booster cable assembly, comprising:

(a) a pair of booster wires, each booster wire having first and second ends,

(b) first battery attachment means connected to the first ends of the booster wires,

(c) second battery attachment means connected to the second ends of the booster wires,

(d) switch means connected to one of the booster wires for selectively electrically interconnecting the first and second ends of said one booster wire,

(e) voltage-detecting means, responsive to voltage across the switch means for determining if said voltage is greater or less than a predetermined value,

(f) the voltage-detecting means including:

(1) a diode bridge circuit connected across the switch means, and

(2) a voltage magnitude detector means connected to the diode bridge circuit, and

(g) the voltage magnitude detector means including:

(1) a light-emitting diode, and

(2) diode means interconnecting the light-emitting diode and the diode bridge circuit for establishing the said predetermined voltage required to actuate the light-emitting diode.

12. A battery booster cable assembly, comprising:

(a) a pair of booster wires, each booster wire having first and second ends,

(b) first battery attachment means connected to the first ends of the booster wires,

(c) second battery attachment means connected to the second ends of the booster wires,

(d) switch means connected to one of the booster wires for selectively electrically interconnecting the first and second ends of said one booster wire,

(e) voltage-detecting means, responsive to voltage across the switch means for determining if said voltage is greater or less than a predetermined value,

(f) a lockout means operatively connected to the voltage-detecting means for selectively precluding actuation of the switch means when said detected voltage is greater than said predetermined value,

(g) the voltage-detecting means including:

(1) a diode bridge circuit connected across the switch means, and

(2) a voltage magnitude detector means connected to the diode bridge circuit,

(h) an indicating means operatively connected to the voltage magnitude detector means, and

(i) the indicating means including:

(1) a first light-emitting diode for indicating when said detected voltage is greater than said predetermined value, and

(2) a second light-emitting diode for indicating when said detected voltage is less than said predetermined value.

* * * * *