US007089285B1

(12) **United States Patent**
Drell

(10) **Patent No.: US 7,089,285 B1**
(45) **Date of Patent: Aug. 8, 2006**

(54) **VIDEOCONFERENCING APPARATUS HAVING INTEGRATED MULTI-POINT CONFERENCE CAPABILITIES**

(75) Inventor: **David Drell**, Austin, TX (US)

(73) Assignee: **Polycom, Inc.**, Pleasanton, CA (US)

(*) Notice: Subject to any disclaimer, the term of this patent is extended or adjusted under 35 U.S.C. 154(b) by 708 days.

(21) Appl. No.: **09/684,145**

(22) Filed: **Oct. 5, 2000**

Related U.S. Application Data

(60) Provisional application No. 60/157,711, filed on Oct. 5, 1999.

(51) **Int. Cl.**
G06F 15/16 (2006.01)
H04N 7/14 (2006.01)

(52) **U.S. Cl.** **709/204**; 348/14.08; 348/14.09

(58) **Field of Classification Search** 709/204–207; 348/14.01, 14.06–14.16, 552
See application file for complete search history.

(56) **References Cited**

U.S. PATENT DOCUMENTS

5,491,797 A 2/1996 Thompson et al.
5,506,954 A * 4/1996 Arshi et al. 345/501
5,784,561 A * 7/1998 Bruno et al. 709/204
5,914,940 A * 6/1999 Fukuoka et al. 370/263
5,936,662 A * 8/1999 Kim et al. 348/14.09
6,025,870 A * 2/2000 Hardy 348/14.1
6,072,522 A * 6/2000 Ippolito et al. 348/14.1
6,073,192 A * 6/2000 Clapp et al. 710/65
6,124,880 A * 9/2000 Shafiee 348/14.08
6,269,122 B1 * 7/2001 Prasad et al. 375/240.28
6,288,739 B1 * 9/2001 Hales et al. 348/14.07
6,356,294 B1 * 3/2002 Martin et al. 348/14.07
6,437,818 B1 * 8/2002 Ludwig et al. 348/14.09
6,453,336 B1 * 9/2002 Beyda et al. 709/204
6,693,661 B1 * 2/2004 Vanderwilt et al. 348/14.01

OTHER PUBLICATIONS

"Portables and Codecs," http://www.tandbergusa.com/produkter/port-codec/pt_6000.html.

* cited by examiner

Primary Examiner—Krisna Lim
Assistant Examiner—Yasin Barqadle
(74) *Attorney, Agent, or Firm*—Wong, Cabello, Lutsch, Rutherford & Brucculeri, LLP

(57) **ABSTRACT**

A videoconferencing apparatus includes a multi-point (MP) conference application that enables the apparatus to combine and distribute audio and video signals received from a plurality of remote conference endpoints, thereby obviating the need to provide a separate multi-point control unit having hardware-based inverse multiplexers (IMUXs). The MP conference application is configured to generate, for each remote conference endpoint participating in a conference, discrete instances of a signal processing train by means of dynamically allocable IMUXs, each processing train including a communication process and audio/video/data codecs. The processed audio and video signals are subsequently conveyed to an audio mixer and video switching module for combination with locally-generated audio and video signals. The outputs of the audio mixer and video switching module are sent to each of the plurality of signal processing trains, which process the combined signals according to a transmit mode for distribution to the remote endpoints over the network.

10 Claims, 5 Drawing Sheets

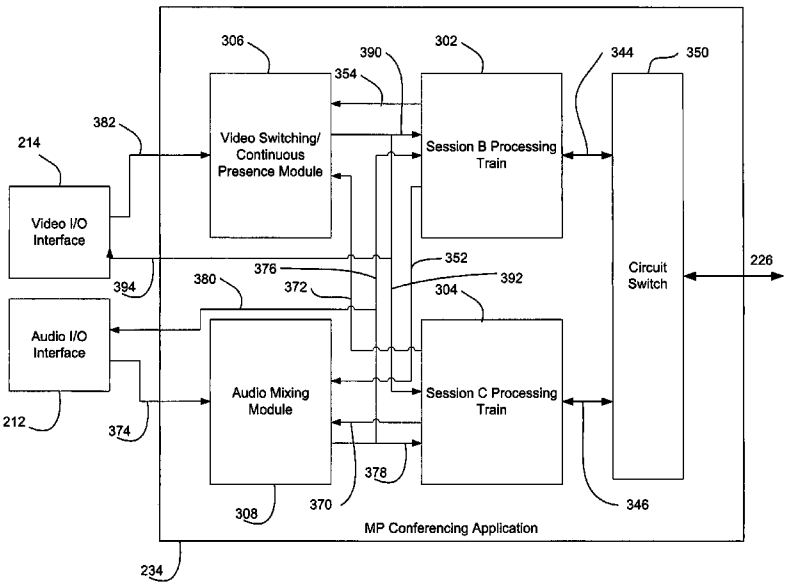

Zoho Corp. and Zoho Corp. Pvt., Ltd.
Exhibit 1008 – 001

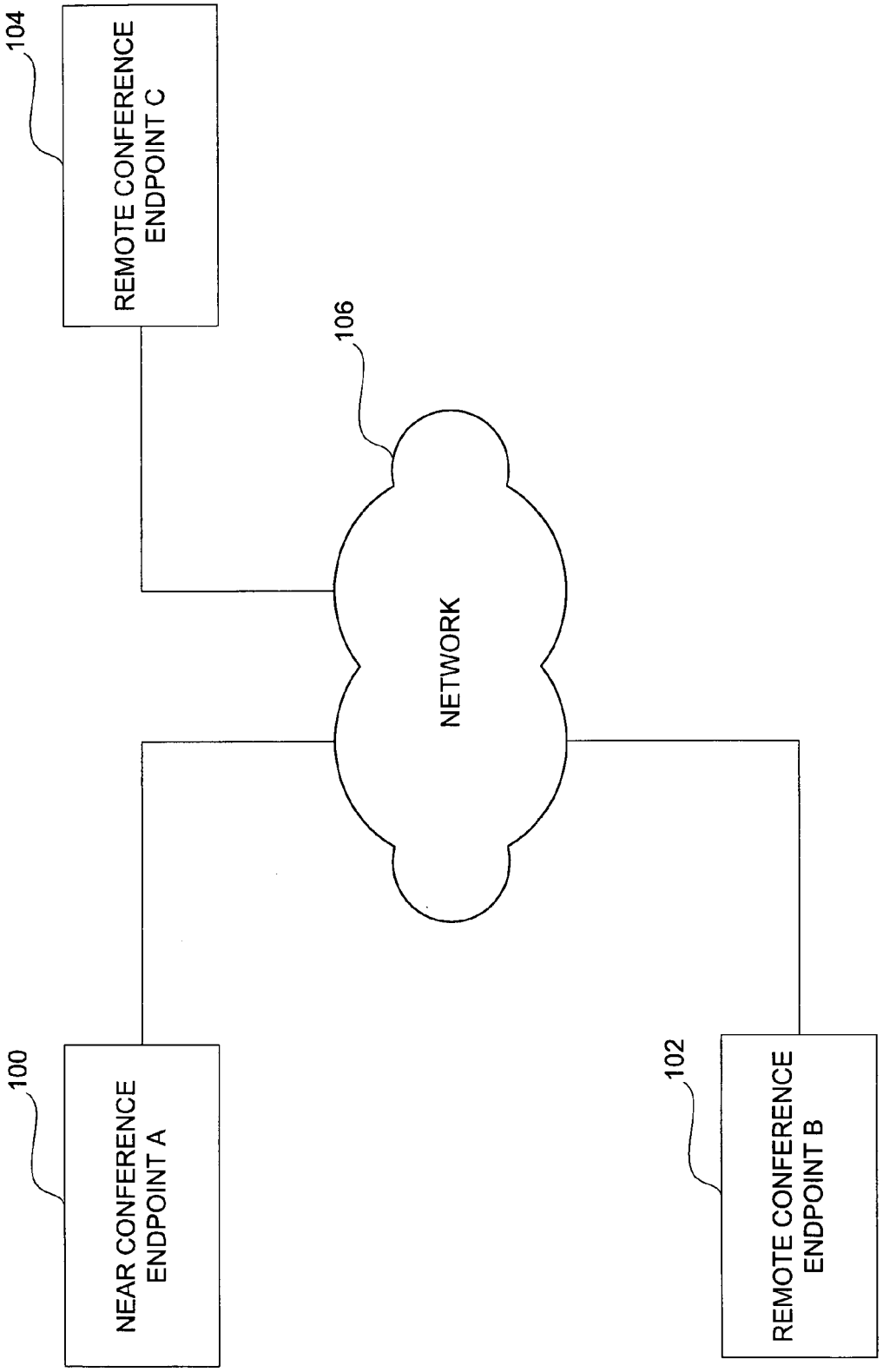
104
REMOTE CONFERENCE ENDPOINT C
106
NETWORK
100
NEAR CONFERENCE ENDPOINT A
102
REMOTE CONFERENCE ENDPOINT B

FIG. 1

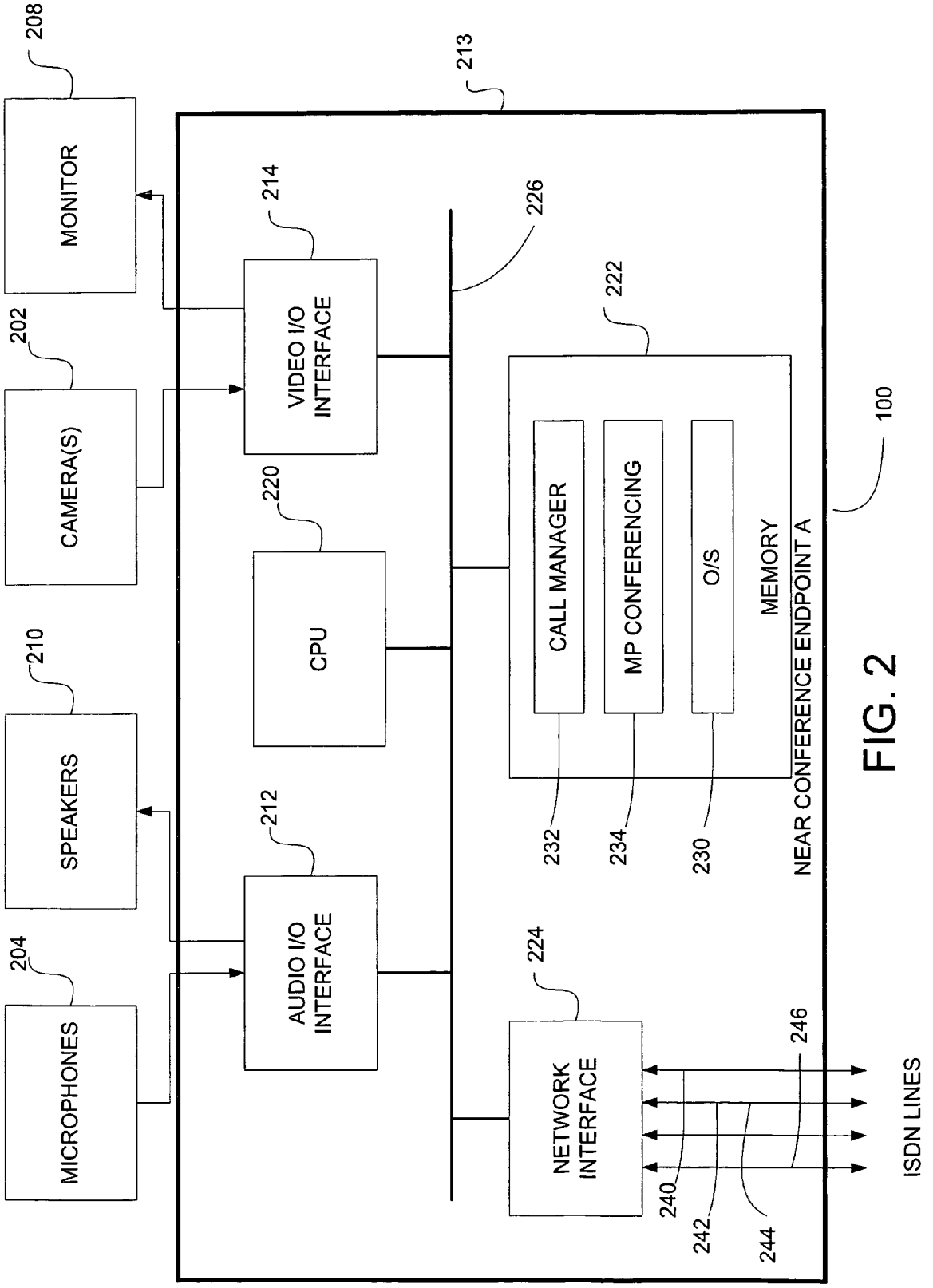
208
MONITOR
202
CAMERA(S)
210
SPEAKERS
204
MICROPHONES
213
214
VIDEO I/O INTERFACE
220
CPU
212
AUDIO I/O INTERFACE
226
222
CALL MANAGER
MP CONFERENCING
O/S
MEMORY
NEAR CONFERENCE ENDPOINT A
232
234
230
224
NETWORK INTERFACE
240
242
244
246
ISDN LINES
100

FIG. 2

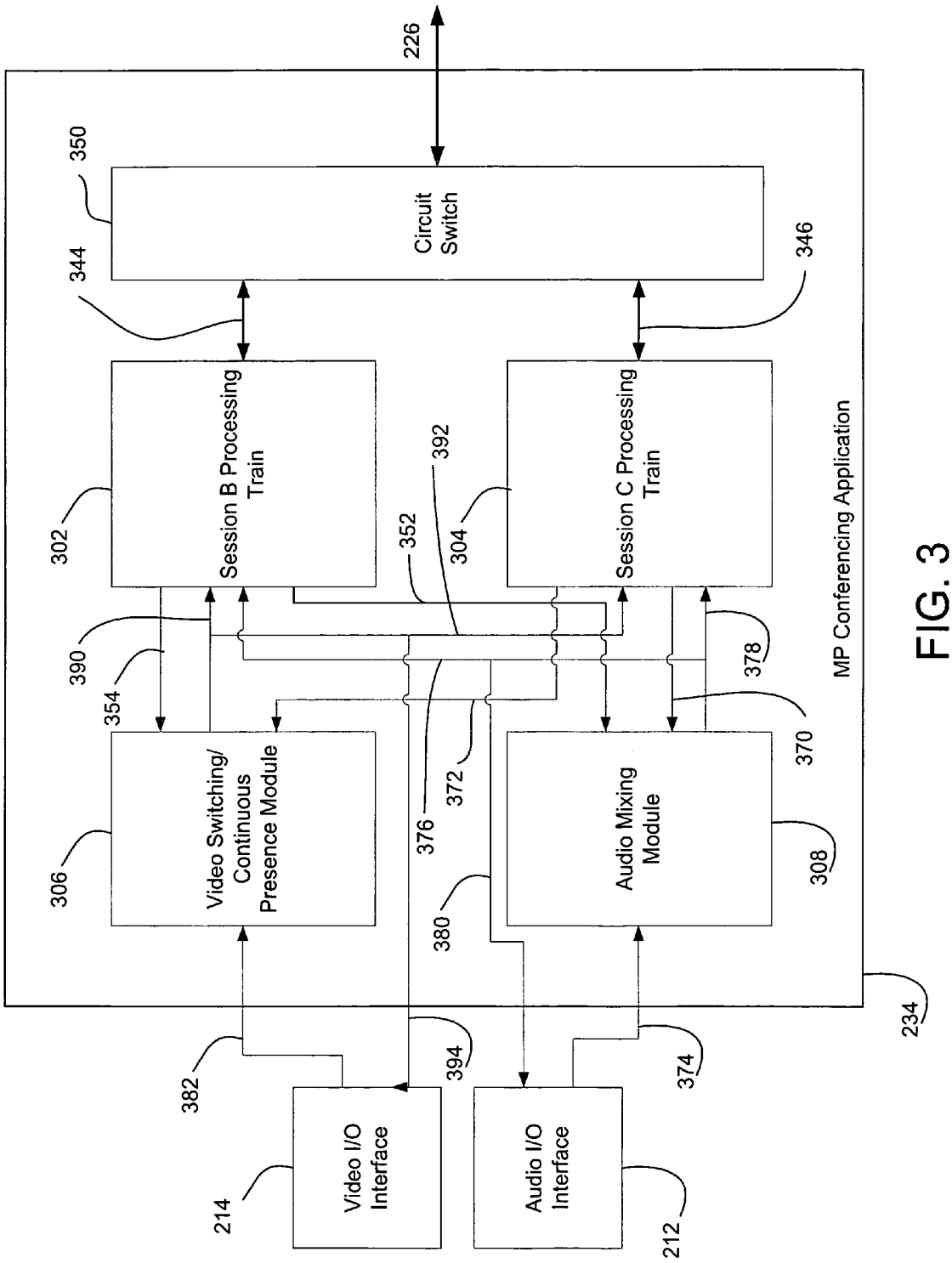
226
350
Circuit Switch
344
346
Session B Processing Train
Session C Processing Train
302
304
392
352
390
354
378
370
372
376
380
Video Switching/ Continuous Presence Module
Audio Mixing Module
306
308
MP Conferencing Application
234
382
394
374
Video I/O Interface
Audio I/O Interface
214
212

FIG. 3

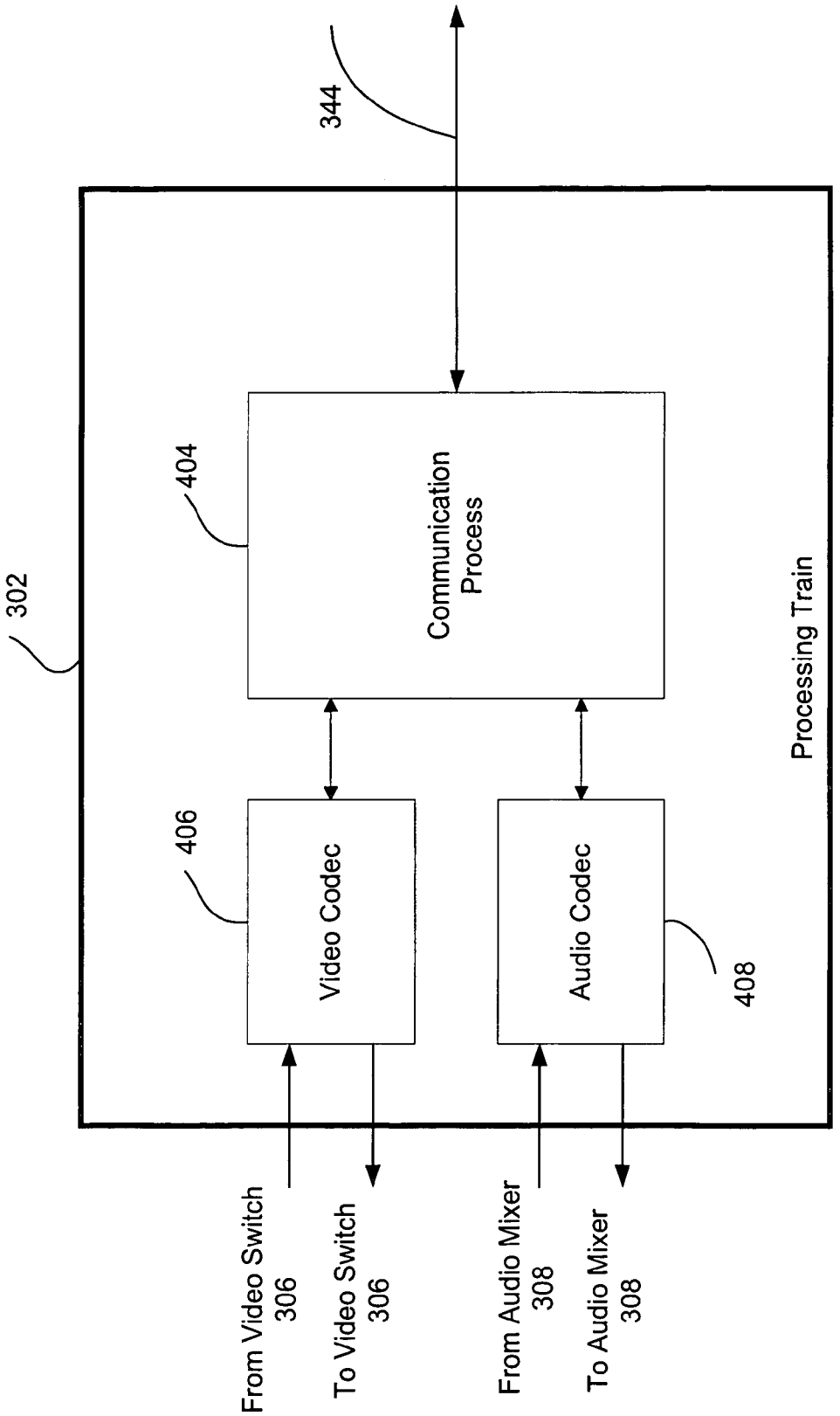
344
302
404
Communication Process
406
Video Codec
Audio Codec
408
Processing Train
From Video Switch 306
To Video Switch 306
From Audio Mixer 308
To Audio Mixer 308

FIG. 4

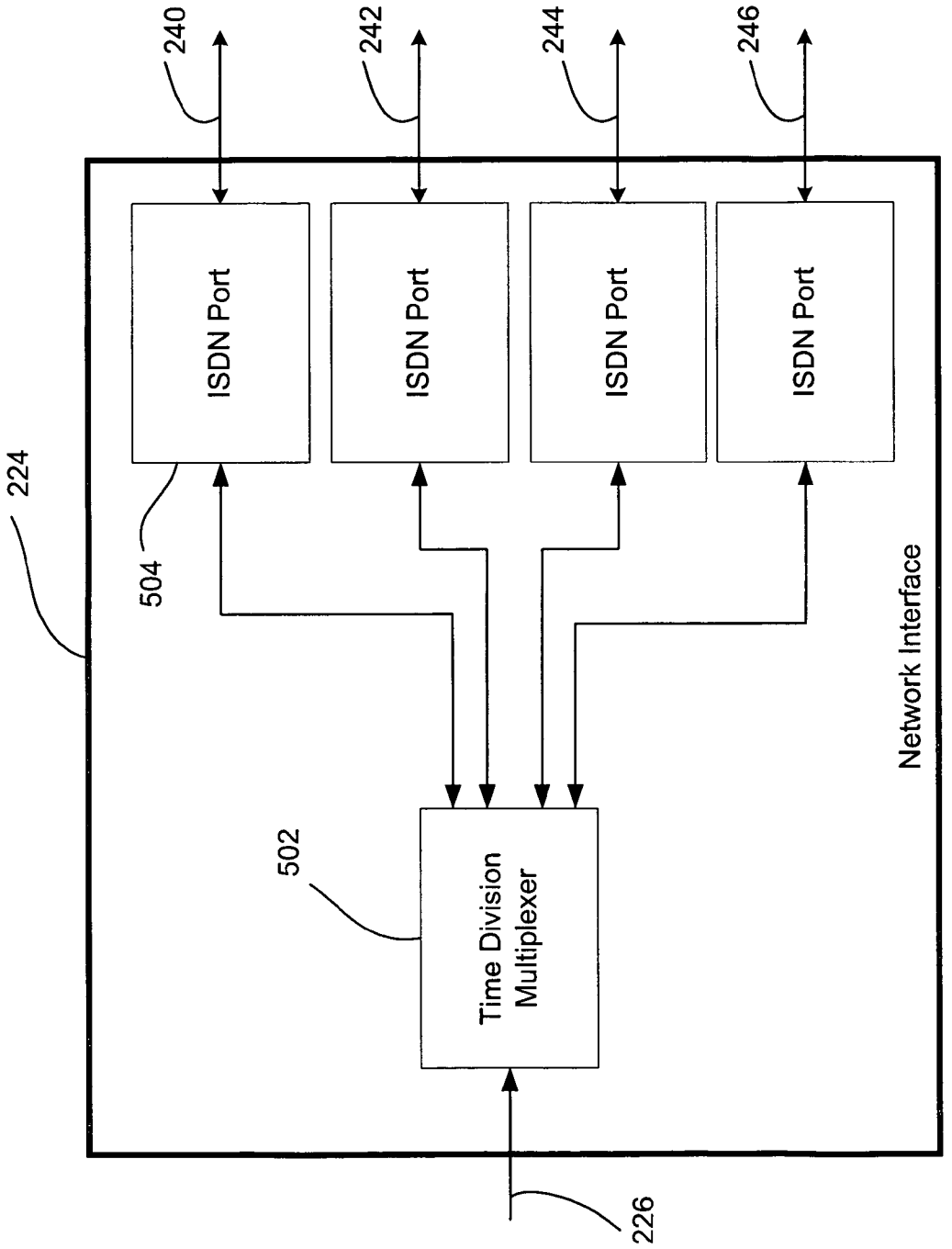
240
242
244
246
ISDN Port
ISDN Port
ISDN Port
ISDN Port
224
504
502
Time Division Multiplexer
Network Interface
226

FIG. 5

VIDEOCONFERENCING APPARATUS HAVING INTEGRATED MULTI-POINT CONFERENCE CAPABILITIES

CROSS REFERENCE TO RELATED APPLICATIONS

The present invention claims priority from U.S. Provisional Patent Application Ser. No. 60/157,711 filed on Oct. 5, 1999, the entire disclosure of which is incorporated herein by reference.

BACKGROUND OF THE INVENTION

1. Field of the Invention

The present invention relates generally to conferencing systems, and more particularly to a videoconferencing apparatus for use with multi-point conferences.

2. Background of the Prior Art

Videoconferencing systems have become an increasingly popular and valuable business communications tool. These systems facilitate rich and natural communication between persons or groups of persons located remotely from each other, and reduce the need for expensive and time-consuming business travel.

At times, it may be desirable to conduct multi-point conferences, wherein three or more parties (each party consisting of an individual or group located at a particular conference endpoint) participate in the conference. Multi-point conferences are particularly useful in situations where several interested parties need to participate in the resolution of an issue, or where information is to be disseminated on an enterprise-wide level. However, commercially available video conferencing systems are generally capable of communicating with only one other conference endpoint at a time. To conduct multi-point conferences, the conference endpoints are conventionally interconnected through an external piece of equipment called a multi-point control unit (MCU). The MCU is provided with multiple ports for receiving signals representative of audio and video information generated at each of the conference endpoints. The received signals are mixed and/or switched as appropriate, and the mixed/switched signals are subsequently transmitted to each of the conference endpoints.

A significant disadvantage associated with the use of MCUs is their expense. An enterprise wishing to conduct multi-point conferences must either purchase a MCU, which may cost upwards of $50,000, or contract for "video bridge" services through a telephone company, wherein an MCU located at the telephone company's facilities is rented on a fee per unit of usage basis. In either case, the high cost of purchasing or renting an MCU may dissuade a company from conducting multi-point conferences, even when it would be useful to do so.

Conventional MCUs further require a dedicated Inverse Multiplexer (IMUX) for each endpoint of a multi-point conference. These dedicated IMUXs are hardware devices which must be purchased and installed at additional cost to achieve increased endpoint capability.

Finally, conventional MCUs include hard-wired processing units each having a dedicated set of channels associated therewith. Thus, unused channels associated with a processing unit are unavailable for allocation to additional endpoints.

What is therefore needed in the art is a relatively low-cost videoconferencing apparatus which can dynamically allocate unused channels on an as needed basis.

SUMMARY OF THE INVENTION

The present invention is directed to a multi-point (MP) conferencing application having dynamically allocable software-based IMUX functions. The IMUX functions are implemented in a software-based circuit switch operable to aggregate a plurality of processing trains to a wideband serial data stream. The IMUX functions are created on an as needed basis for each endpoint in a multi-point conference.

The MP conferencing application is coupled to a conventional network interface including a time division multiplexer. The time division multiplexer is in turn coupled to a plurality of communication ports, which may typically include ISDN ports, enabling an apparatus including the MP conferencing application to be coupled to two or more remote conference endpoints through a switched network.

The (MP) conferencing application is operable to process the plural signal streams received through the communication ports. Generally, the MP conferencing application generates separate processing trains for signal streams from/to each of the remote conference endpoints. The processing trains each comprise a communication process and a set of codecs. In the receive mode, an IMUX function combines signal streams (representative of a single conference endpoint) distributed over two or more channels into a single, relatively high bandwidth channel. The communication process, which may for example comprise an H.320 process (ISDN-based) or H.323 (packet-based) process, separates the signal stream into audio and video signals, and performs certain processing operations (such as delay compensation) associated therewith. The audio and video signals are thereafter respectively delivered to audio and video codecs for decoding.

The decoded audio and video streams output by each of the processing trains, together with the locally generated audio and video signals, are combined at an audio mixer and a video switching/continuous presence module. The video module may be configured to selectively generate as output video data representative of a composite or continuous presence image, wherein video information (e.g., images of the conference participants) corresponding to each of the conference endpoints is displayed in different sectors of the screen. The combined audio and video data streams are conveyed as input to each processing train for encoding and transmission to the corresponding conference endpoints. In the send mode, the audio and video signals are encoded by the audio/video codecs and multiplexed into a single data stream by the communication process. The combined audio/video data stream is then conveyed to the IMUX function, which distributes the combined audio/video data stream over the channels associated with the selected remote conference endpoint.

BRIEF DESCRIPTION OF THE FIGURES

FIG. **1** depicts a near videoconferencing endpoint interconnected with two remote videoconferencing endpoints, the near videoconferencing endpoint having integrated multi-point conferencing capabilities;

FIG. **2** is a block diagram of the near conferencing endpoint;

FIG. **3** is a block diagram of a multi-point conferencing application of FIG. **2**;

FIG. **4** is a block diagram of an exemplary signal processing train of FIG. **3**; and

FIG. **5** is a block diagram of an exemplary network interface.

Zoho Corp. and Zoho Corp. Pvt., Ltd.
Exhibit 1008 – 007

DETAILED DESCRIPTION OF PREFERRED EMBODIMENTS

FIG. **1** depicts an exemplary operating environment of the multi-point (MP) conferencing application of the present invention. A near conference endpoint **100**, embodying the MP conferencing application, is coupled to remote conference endpoints **102** and **104** via a network **106**. Remote conference endpoints **102** and **104** may comprise, for example, conventional videoconferencing devices equipped to transmit and receive both video (image) data and audio (speech) data. Alternatively, one or more of remote conference endpoints **102** and **104** may comprise conventional audio conferencing devices limited to reception and transmission of audio data. It should be appreciated that while only two remote conference endpoints are depicted in FIG. **1** for the purpose of clarity, a greater number of remote conference endpoints may be accommodated by near conference endpoint **100**.

Network **106** may be of any type suitable for the transmission of audio and video data between and among near conference endpoint **100** and remote conference endpoints **102** and **104**. Typically, network **106** will comprise the public switched telephone network (PSTN) or comparable circuit switched network to which each of the conference endpoints is connected by one or more ISDN lines. A multi-point conference is initiated by establishing a connection between near conference endpoint **100** and remote conference endpoint **102**, and between near conference endpoint **100** and remote conference endpoint **104**. Establishment of the connections may be effected through a dial-up procedure, or through use of a dedicated line.

Alternatively, network **106** may comprise a packet switched network, such as the Internet. Although a single network **106** is shown, the invention contemplates the use of two or more networks (for example, the PSTN and the Internet) to connect conference endpoints utilizing different communication protocols.

Reference is now directed to FIG. **2**, which depicts in block form various components of near conference endpoint **100**. A conventional video camera **202** and microphone **204** are operative to generate video and audio signals representative of the images and speech of the near conference participant (the person or persons co-located with near videoconference endpoint **100**). A video monitor **208** and loudspeaker **210** present images and speech of the remote conference participants combined with locally generated images and speech. An audio I/O interface **212**, configured to perform A/D and D/A conversion and related processing of audio signals, couples microphone **204** and loudspeaker **210** to CPU **220** and memory **222** through bus **226**. Similarly, video camera **202** and monitor **208** are coupled to console electronics **213** through video I/O interface **214**.

Console electronics **213** additionally include a central processing unit (CPU) **220** for executing program instructions, a memory **222** for storing applications, data, and other information, and a network interface **224** for connecting near conference endpoint **100** to network **106**. Memory **222** may variously comprise one or a combination of volatile or non-volatile memories, such as random access memory (RAM), read-only memory (ROM), programmable ROM (PROM), or non-volatile storage media such as hard disks or CD-ROMs. At least one bus **226** interconnects the components of console electronics **213**.

Network interface **224** is provided with a plurality of ports for physically coupling near conference endpoint **100** to a corresponding plurality of ISDN lines **240**–**246** or similar transmission media. The number of ports will be determined by the types of connections to network **106**, the maximum number of remote conference endpoints which may be accommodated by videoconference endpoint **100**, and the required or desired bandwidth per endpoint connection. Depending on bandwidth requirements, data communicated between near conference endpoint **100** and a remote conference endpoint may be carried on a single ISDN line, or may be distributed (for higher bandwidth connections) among a plurality of ISDN lines.

Stored within memory **222** are an operating system **230**, a call manager application **232**, and the MP conferencing application **234**. Operating system **230** controls the allocation and usage of hardware resources, such as CPU **220** and memory **222**. Call manager application **232** controls the establishment and termination of connections between near conferencing endpoint **100** and remote conference endpoints **102** and **104**, and may also furnish information characterizing the nature of individual connections to MP conferencing application **234**.

As will be described in further detail below, MP conferencing application **234** is configured to instantiate a processing train for each remote conference endpoint **102** and **104** to which near conference endpoint **100** is connected. The processing trains process audio and video data streams received from remote conferencing endpoints **102** and **104**. The processed audio and video data streams are combined with each other and with locally generated audio and video streams, and the combined audio and video streams are thereafter distributed to remote conferencing endpoints **102** and **104**.

FIG. **3** is a block diagram showing the various components of an embodiment of MP conferencing application **234** and the flow of data between and among the various components. MP conferencing application **234** includes a circuit switch **350**, a plurality of processing trains **302** and **304**, a video switching/continuous presence module **306**, and an audio mixing module **308**. The circuit switch **350** dynamically instantiates a number of high bandwidth processing trains equal to the number of remote conference endpoints to which near conference endpoint **100** is connected and preferably includes an dynamically created IMUX allocated to each remote conference endpoint. Each IMUX preferably utilizes a bonding protocol. In the example depicted in the figures, the circuit switch **350** dynamically allocates two IMUXs and generates two processing trains **302** and **304** respectively corresponding to remote conference endpoints **102** and **104**.

Processing trains **302** and **304** preferably comprise software routines which process received and transmitted audio and video signals in accordance with predetermined algorithms. In the receive mode, processing train **302** is instantiated by circuit switch **350** to include signals representative of audio and video data transmitted by remote conference endpoint **102**. Illustratively, remote conference endpoint **102** may transmit signals on ISDN lines, each ISDN line comprising two distinct 64 Kb/sec bi-directional channels ("Bearer channels"). Those skilled in the art will recognize that a smaller or greater number of ISDN lines may be utilized for communication with remote conference endpoint **102**. As will be described in connection with FIG. **4**, processing train **302** is operative to extract and decode audio and video data from signals received from remote conference endpoint **102**. Decoded audio data is conveyed to audio mixing module **308** over audio data path **352**, and decoded video data is conveyed to video switching/continuous presence module **306** over video data path **354**.

Zoho Corp. and Zoho Corp. Pvt., Ltd.
Exhibit 1008 – 008

Processing train **304** similarly receives audio and video data transmitted by remote conference endpoint **104**. Processing train **304** extracts and decodes the audio and video data and subsequently passes the decoded audio and video data to audio mixing module **308** and video switching/continuous presence module **306** over audio and video data paths **370** and **372**.

Audio mixing module **308** is configured to combine audio data received from remote conference endpoints **102** and **104** with locally generated audio data (received from audio I/O interface **212** via audio data path **374**, and typically being representative of the speech of the near conference participant(s)). The term "combine" is used in its broadest and most general sense and is intended to cover any operation wherein audio mixing module **308** generates an output audio data stream (or plurality of output audio data streams) based on information contained in the remotely and locally generated audio data input streams. For example, audio mixing module **308** may simply mix the received audio input data streams, or it may be configured as an audio switch wherein it selects one of the received audio input data streams for output in accordance with predetermined criteria. The output audio data stream is directed to processing trains **302** and **304** and audio I/O interface **212** along output audio paths **376**, **378** and **380**.

Video switching/continuous presence module **306** combines video data received from remote conference endpoints **102** and **104** with locally generated video data (received from video I/O interface **214** via video data path **382**, and being typically representative of images of the near conference participants). Again, the term "combine" is used in its broadest and most general sense. In one mode of operation, video switching/continuous presence module **306** may select one of the video data input streams for output based on predetermined criteria (for example, it may select for output the video data stream corresponding to the conference endpoint of the currently speaking participants. In a second mode of operation (referred to as the "continuous presence mode"), video switching/continuous presence module **306** may construct a composite image wherein images corresponding to conference endpoints are displayed in different sectors of the composite image. The video data stream output (or plurality of outputs) from video switching continuous presence module **306** is thereafter distributed to processing trains **302** and **304** and video I/O interface **214** via video data paths **390**, **392** and **394**.

In the transmission mode, processing train **302** is configured to receive the audio and video data streams output by audio mixing module **308** and video switching/continuous presence module **306**. The received data streams are then encoded and combined to form a mixed encoded audio/video data stream, and the encoded audio/video data stream is transmitted to the circuit switch **350** via data path **344**. Similarly, processing train **304** receives the audio and video streams output by audio mixing module **308** and video switching/continuous presence module **306**, encodes and combines the audio and video data streams, and transmits the encoded audio/video data stream to the circuit switch **350** via data path **346**. For each encoded audio/video data stream, the circuit switch **350** allocates an IMUX which aggregates the data streams into a wideband data stream on the bus **226**, preferably utilizing a bonding protocol.

FIG. **4** depicts components of an exemplary processing train **302**. Processing train **302** includes a communication process **404** and video and audio codecs **406** and **408**. In the receive mode, the combined data stream **344** is directed to communication process **404** which carries out a predetermined set of functions with respect to data stream **344**.

According to one embodiment of the invention, communication process **404** implements the multiplexing, delay compensation and signaling functions set forth in ITU Recommendation H.320 ("Narrow-Band Visual Telephone Systems and Terminal Equipment"). In particular, communication process **404** includes a multiplexer/demultiplexer for (in the receive mode) extracting separate audio and video signals from mixed data stream **344** in accordance with ITU Recommendation H.221. Communication process **404** may further include a delay compensation process for inducing a delay in the audio data path in order to maintain lip synchronization. A system control unit is incorporated into communication process **404** and is configured to establish a common mode of operation with remote conference endpoint **102** in accordance with ITU Recommendation H.242.

Audio codec **408** receives the audio data stream from communication process **404** and applies redundancy reduction decoding in accordance with a standard (e.g., ITU Recommendation G.711) or proprietary audio compression algorithm. The decoded audio data stream is then sent to audio mixing module **308**, as described above. Similarly, video codec **406** receives the video data stream and applies redundancy reduction decoding in accordance with a standard (e.g., ITU Recommendation H.261) or proprietary video compression algorithm. The decoded video data stream is subsequently sent to video switching/continuous presence module **306** for combination with video data generated by remote conference endpoint **104** and near conference endpoint **100**, as described above in connection with FIG. **3**.

In the transmit mode, video codec **406** encodes the video data stream output by video switching/continuous presence module **306** (representative, for example, of a "continuous presence" image) using a standard or proprietary video compression algorithm (e.g., H.261) and delivers the encoded video data to communication process **404**. Audio codec **408** encodes the audio data stream output by audio mixing module **308** (representative, for example, of the blended speech of conference participants located at near conference endpoint **100** and remote conference endpoints **102** and **104**) using a standard or proprietary audio compression algorithm (e.g., G.711) and delivers the encoded audio data to communication process **404**.

Communication process **404** multiplexes the encoded audio and video data streams into a single audio/video data stream **344** of relatively high-bandwidth. The audio/video data stream is conveyed to circuit switch **350**, which breaks up and distributes the high-bandwidth audio/video data signal over plural ISDN channels as further described hereinbelow.

It is noted that, while not depicted in the Figures, processing train **302** may include a data codec for coding and encoding still images and the like received from or transmitted to remote conference endpoints **102** and **104**.

With reference to FIG. **5** the network interface **224** includes a time division multiplexer **502** which receives the wideband data stream **226** from the circuit switch **350**. The time division multiplexer **502** is coupled to a plurality of ISDN ports **504** for receiving and transmitting signals on lines **240**, **242**, **244**, and **246**.

The present invention advantageously utilizes software-based processing of video and audio data streams to implement a multi-point conferencing capability in a conference endpoint. By dynamically generating a separate instance of a processing train for each remote endpoint session, a

Zoho Corp. and Zoho Corp. Pvt., Ltd.
Exhibit 1008 – 009

videoconferencing system embodying the invention may easily and flexibly accommodate endpoint sessions comprising a range of connection bandwidths and communication protocols. Other advantages will occur to those of ordinary skill upon review of the foregoing description and the associated figures.

It is to be understood that the detailed description set forth above is provided by way of example only. Various details of design, implementation or mode of operation may be modified without departing from the true spirit and scope of the invention, which is not limited to the preferred embodiments discussed in the description, but instead is set forth in the following claims.

What is claimed is:

1. A method for conducting a conference between a near conference endpoint and a plurality of remote conference endpoints connected for communication by a network, comprising the steps of:

at the near conference endpoint:

generating local audio and video signals;

receiving audio and video signals from the plurality of remote conference endpoints;

creating a plurality of processing trains for processing the received signals, each processing train uniquely corresponding to one of the plurality of remote conference endpoints;

processing the received audio and video signals;

combining the processed audio and video signals with the local audio and video signals; and

transmitting the combined audio and video signals to each of the plurality of remote conference endpoints.

2. The method of claim **1**, wherein the step of creating a plurality of processing trains includes creating a communication process and a set of codecs.

3. The method of claim **1**, wherein the step of combining the processed audio and video signals is performed using an audio mixer and a video switching module.

4. The method of claim **1** further comprising providing a circuit switch for instantiating the plurality of processing trains, the circuit switch including dynamically allocable inverse multiplexers.

5. The method of claim **3**, wherein the video switching module is selectively operable in a continuous presence mode, wherein images corresponding to each of the plurality of conference endpoints are displayed in separate areas of a composite image.

6. A multi-point capable video conferencing endpoint comprising:

a network interface for receiving remote audio and video data from a plurality of remote endpoints through a network;

an audio interface for receiving local audio data from a local source;

a video interface for receiving local video data from a local source; and

a CPU programmed to control receipt of the remote audio and video data, receipt of the local audio and video data; combination of the remote audio and video data with the local audio and video data; and transmission of the combined audio and video data to each of the plurality of remote endpoints through the network, wherein the CPU is further programmed to instantiate a plurality of processing trains corresponding to the plurality of remote endpoints, wherein each processing train receives the audio and video data from a single remote endpoint.

7. The multi-point capable video conferencing endpoint of claim **6**, wherein each processing train comprises:

a communication process for sending and receiving the audio and video data to and from a single remote endpoint;

a video codec in communication with the communication process for encoding the sent video data and decoding the received video data; and

an audio codec in communication with the communication process for encoding the sent audio data and decoding the received audio data.

8. The multi-point capable video conferencing endpoint of claim **7**, further comprising:

a video switching module in communication with each of the plurality of processing trains and the video interface for combining the local video data with the remote video data; and

an audio mixing module in communication with each of the plurality of processing trains and the audio interface for combining the local audio data with the remote audio data.

9. The multi-point capable video conferencing endpoint of claim **6**, wherein the network interface comprises a plurality of ISDN ports corresponding to the plurality of remote endpoints.

10. The multi-point capable video conferencing endpoint of claim **6**, wherein the network interface comprises an Ethernet connection.

* * * * *