US 20110077497A1

(19) United States

(12) Patent Application Publication

(10) Pub. No.: US 2011/0077497 A1

(43) Pub. Date: Mar. 31, 2011

Oster et al.

(54) BIOMEDICAL SENSOR SYSTEM

(76) Inventors: **Craig D. Oster**, Oakdale, MN (US); **Hatim M. Carim**, West St. Paul, MN (US); **Casey L. Carlson**, Edina, MN (US); **Vinod P. Menon**, Woodbury, MN (US); **Jon A. Kirschhoffer**, White Bear Lake, MN (US); **William Bedingham**, Woodbury, MN (US); **Christopher R. Yungers**, Saint Paul, MN (US)

(21) Appl. No.: **12/990,064**

(22) PCT Filed: **Apr. 29, 2009**

(86) PCT No.: **PCT/US09/42013**

§ 371 (c)(1), (2), (4) Date: **Dec. 1, 2010**

Related U.S. Application Data

(60) Provisional application No. 61/049,671, filed on May 1, 2008.

Publication Classification

(51) **Int. Cl.**
A61B 5/0408 (2006.01)
A61B 5/00 (2006.01)

(52) **U.S. Cl.** **600/372**; 600/300

(57) **ABSTRACT**

A biomedical sensor system. The system can include a sensor adapted to create a signal based on a physiological characteristic from a subject, and a hub adapted to receive the signal from the sensor. The signal can include at least one of an electromagnetic signal, an electrical signal, an acoustic signal, a mechanical signal, a thermal signal, and a chemical signal. The system can further include a connector adapted to couple the sensor and the hub, the connector having a variable length, such that the sensor and the hub can be positioned a variable distance apart by changing the length of the connector. The connector can be adapted to provide a pathway between the sensor and the hub for the signal. A method of applying a biomedical sensor system to a subject can include changing the length of the variable-length connector to provide an appropriate distance between the sensor and the hub, and coupling the sensor to the subject.

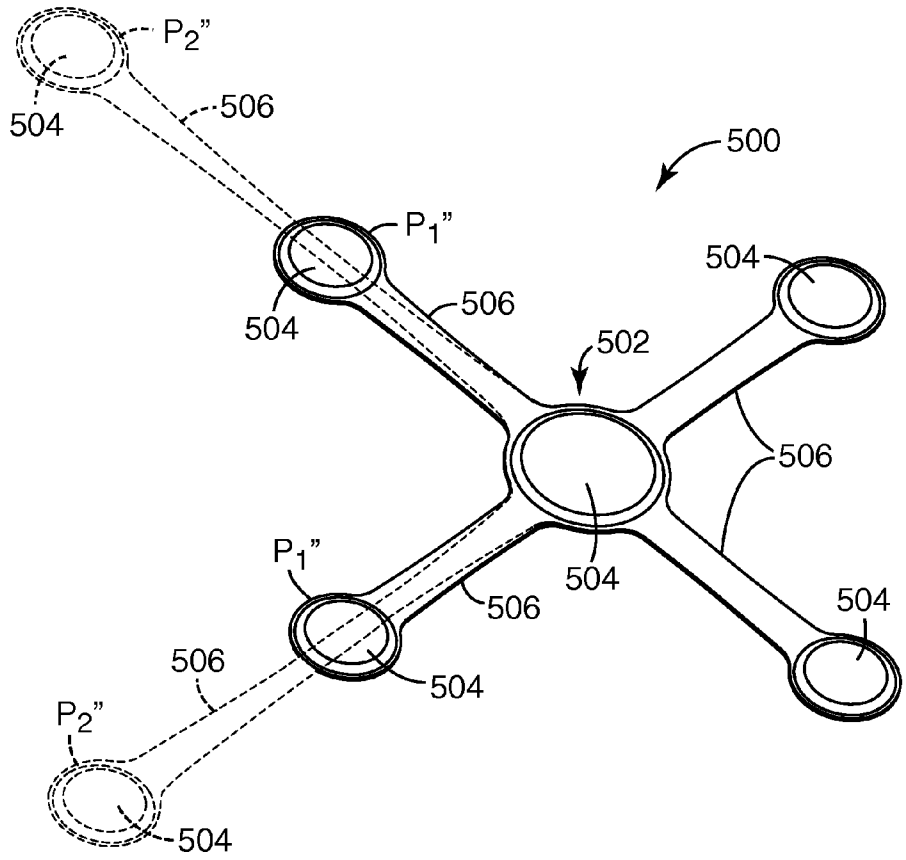

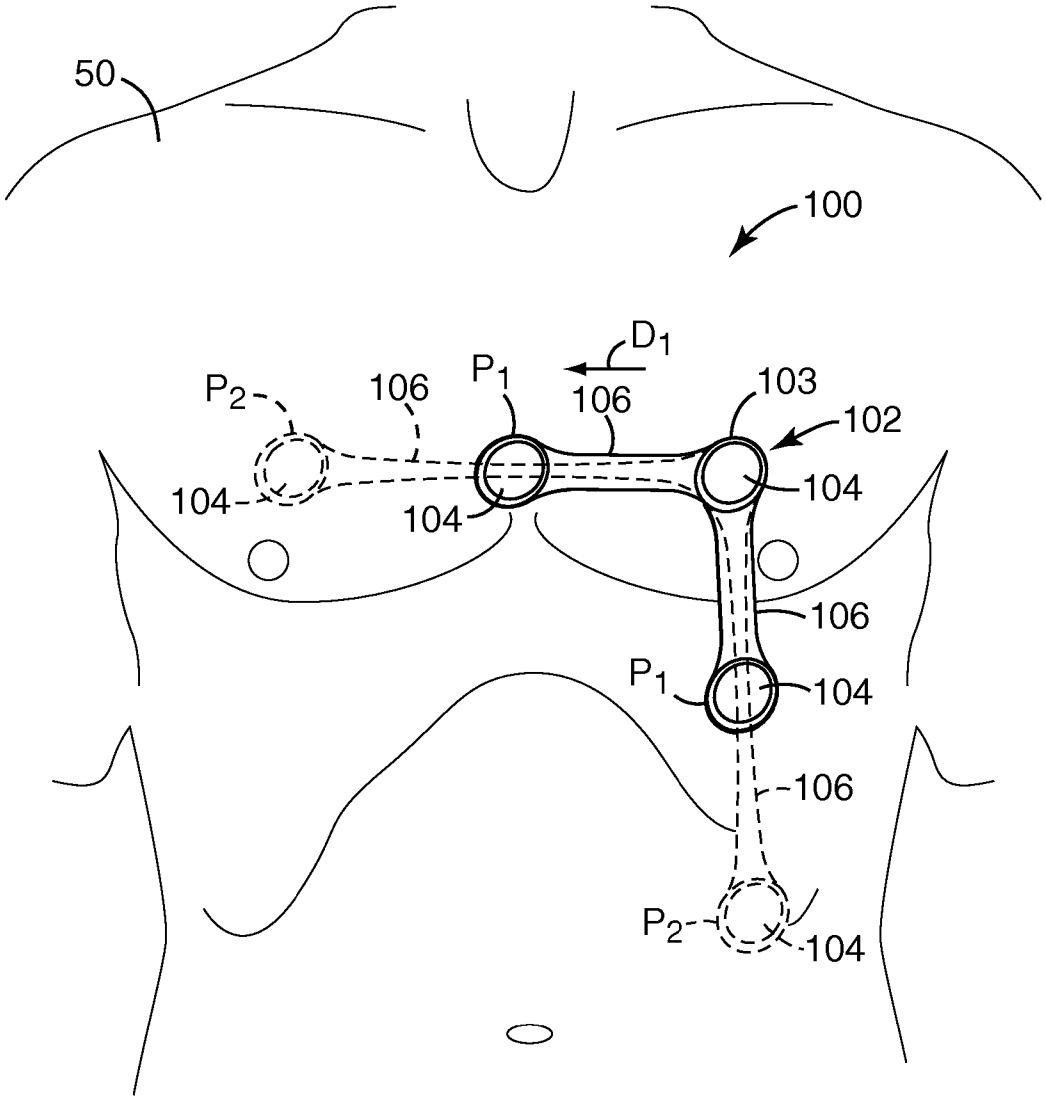

Fig. 1

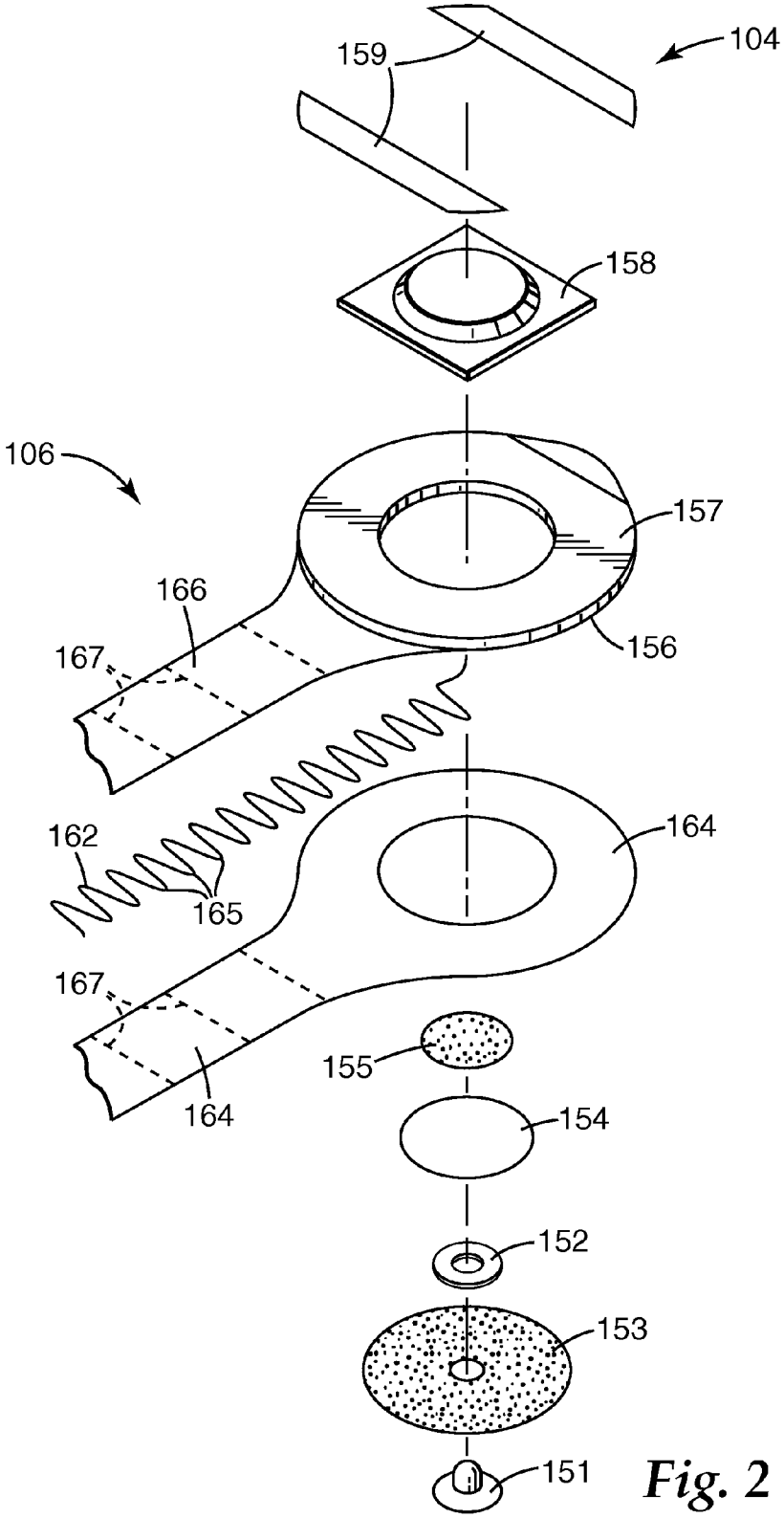
104
159
158
106
157
166
167
156
162
165
164
167
155
164
154
152
153
151

Fig. 2

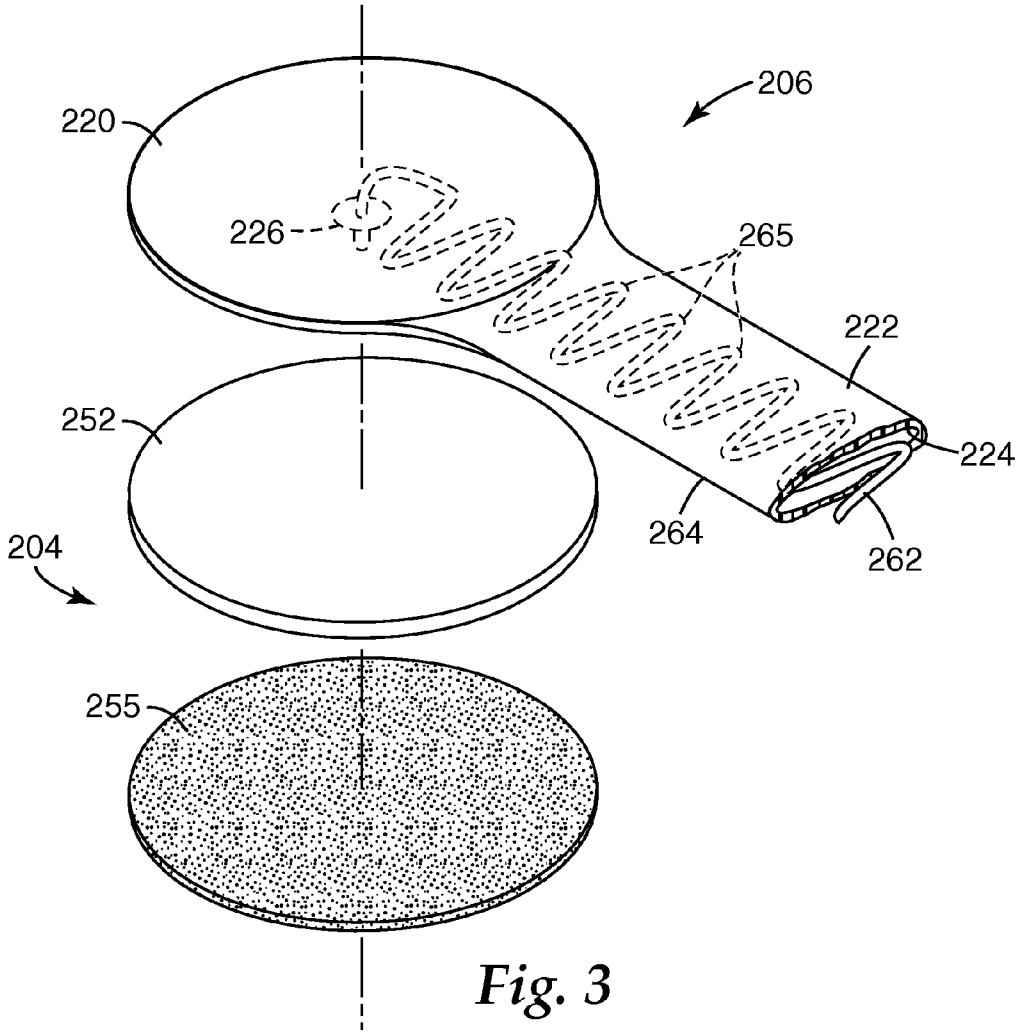

Fig. 3

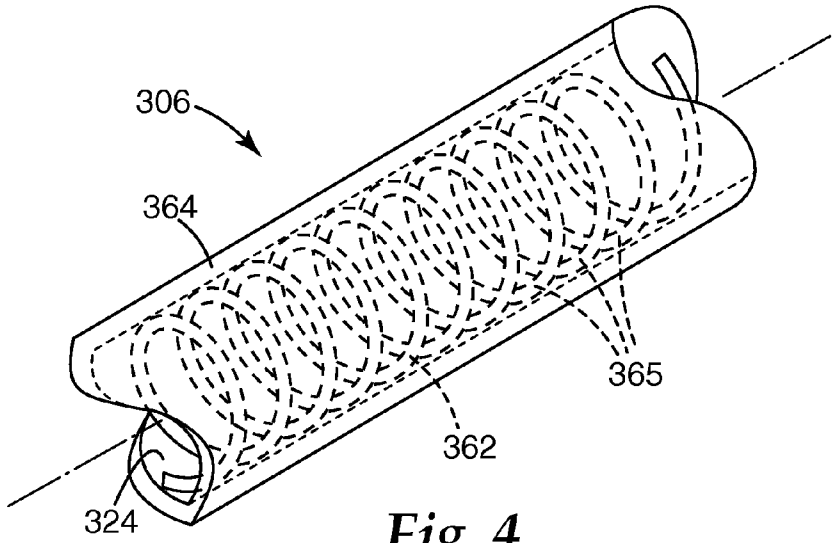

Fig. 4

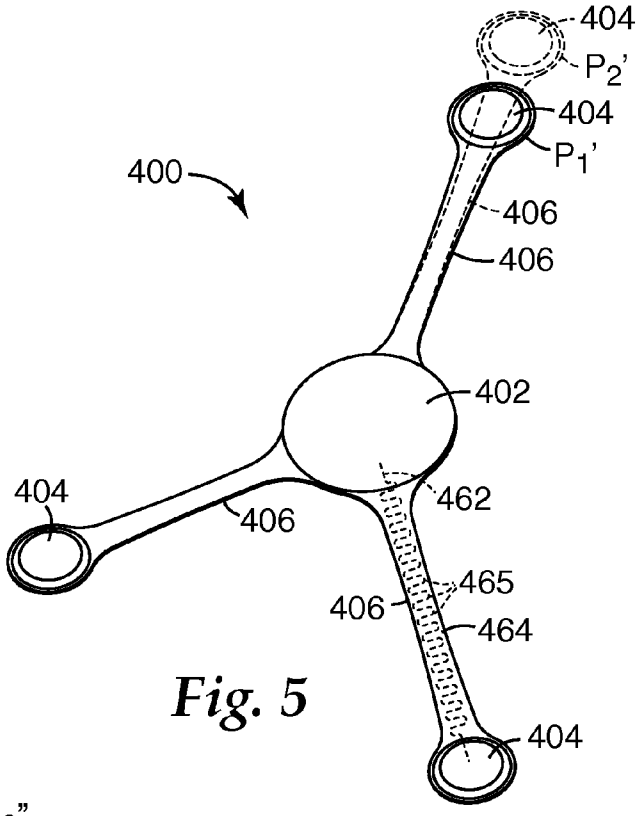
404
P2'
404
P1'
400
406
406
402
404
462
406
465
406
464
404

Fig. 5

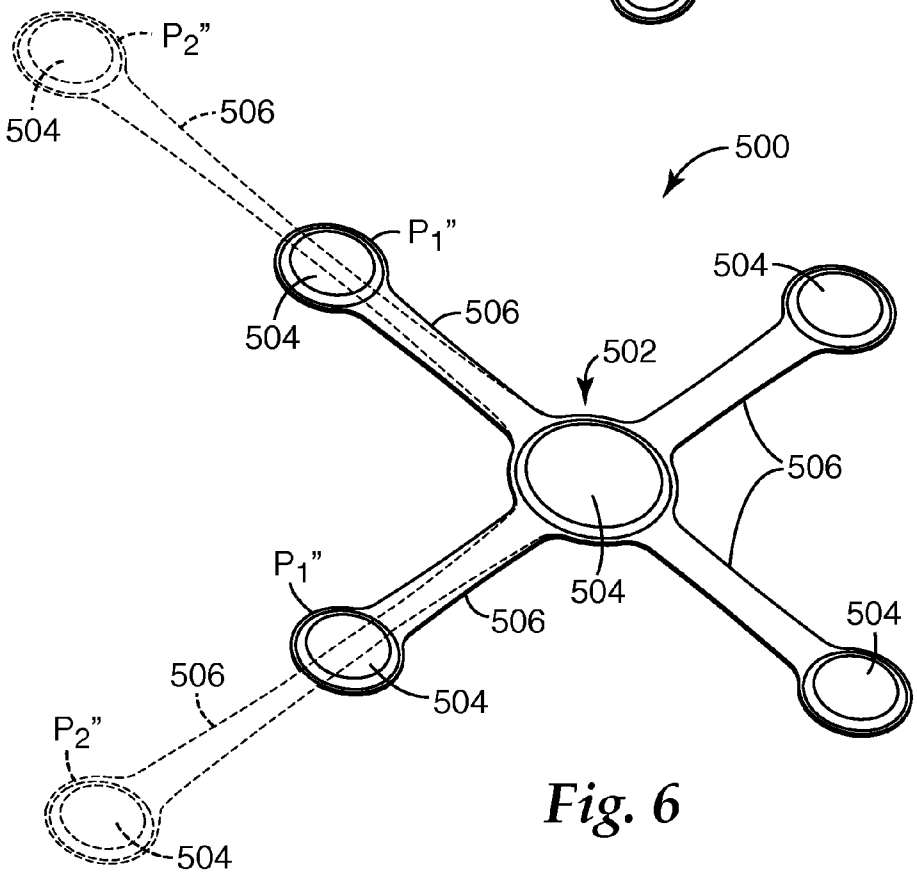
P2"
504
506
500
P1"
504
506
504
502
506
P1"
504
506
504
506
504
P2"
504

Fig. 6

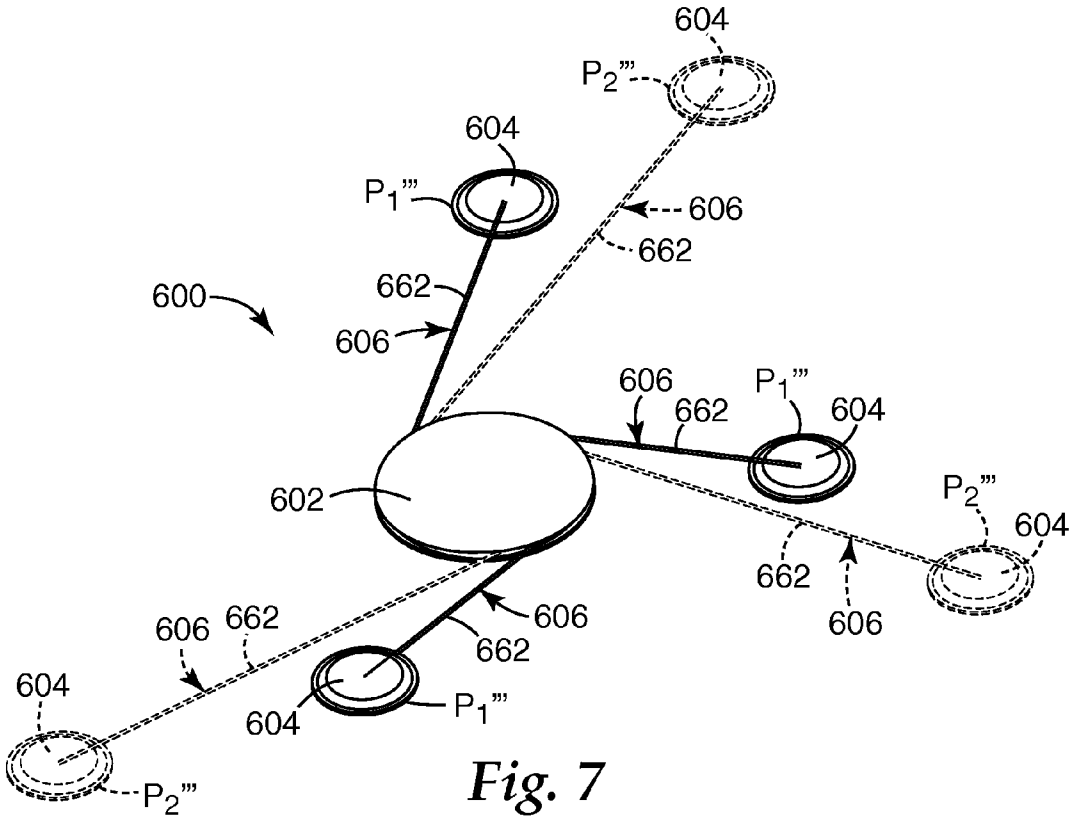
604
P2'''
604
P1'''
606
662
600
662
606
606
P1'''
662
604
602
P2'''
604
662
606
606
662
606
662
604
604
P1'''
P2'''

Fig. 7

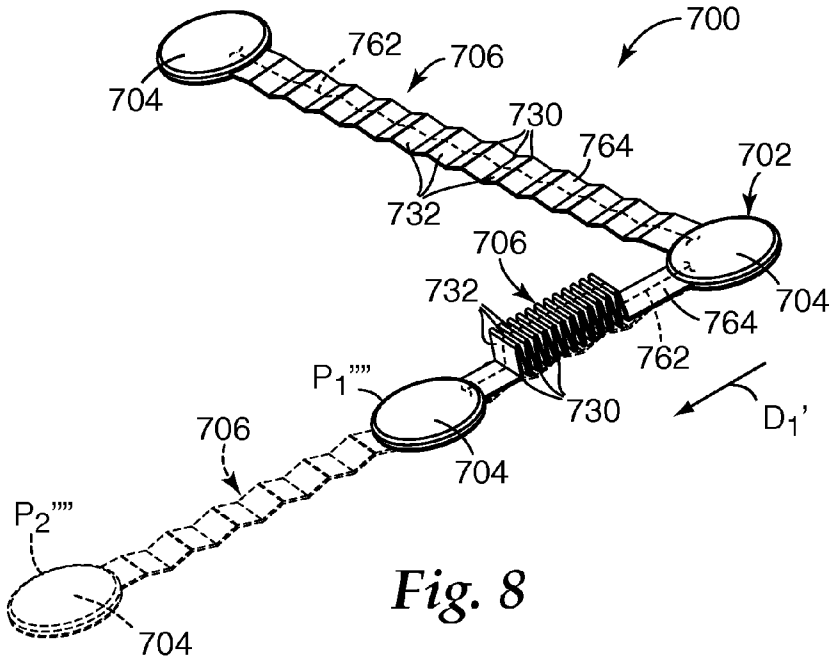
700
762
706
704
730
764
702
732
706
732
704
764
762
P1''''
730
D1'
706
704
P2''''
704

Fig. 8

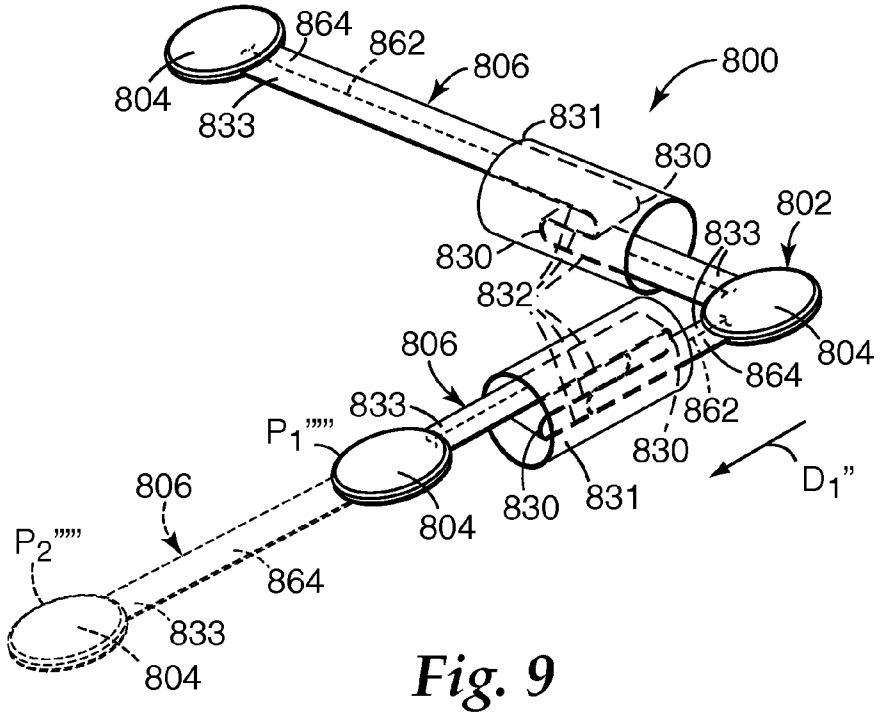

Fig. 9

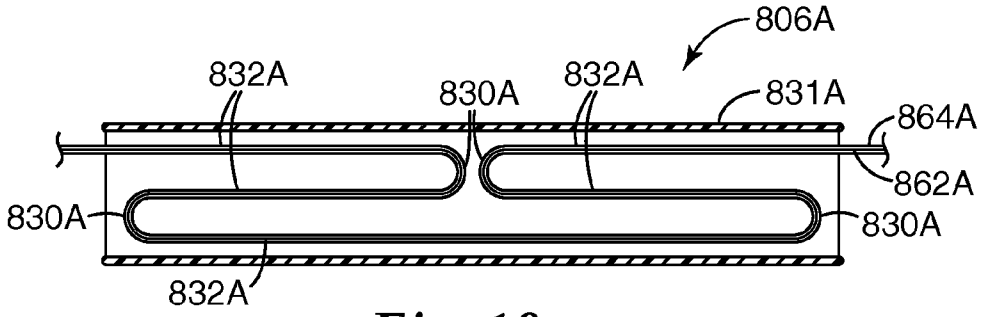

Fig. 10

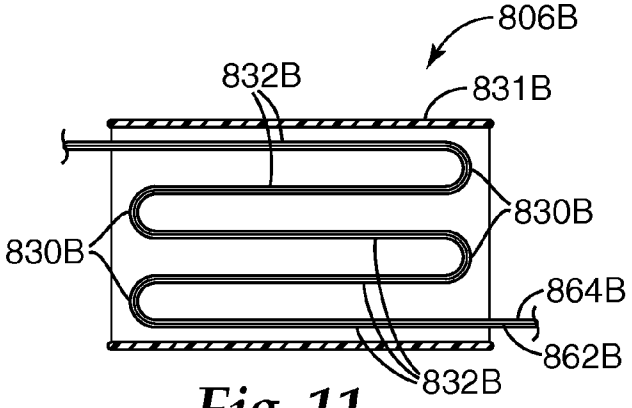

Fig. 11

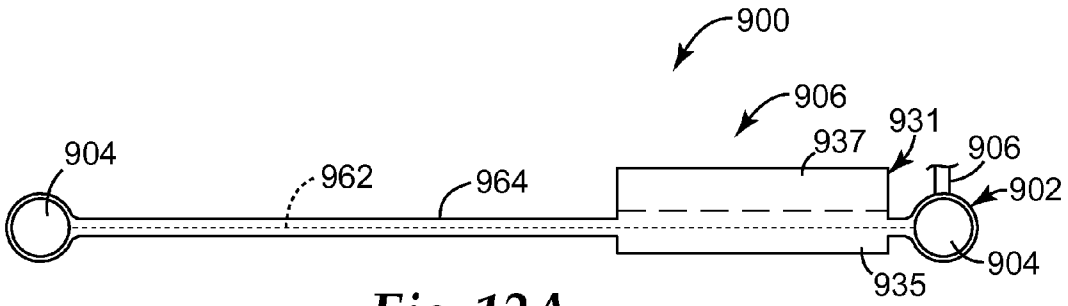

Fig. 12A

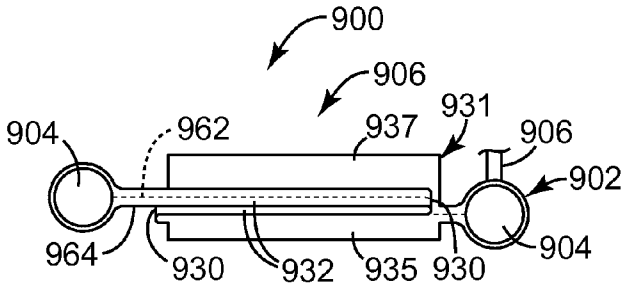

Fig. 12B

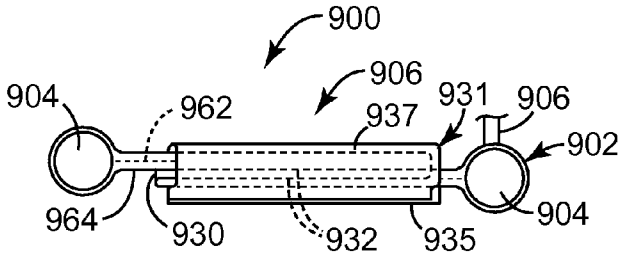

Fig. 12C

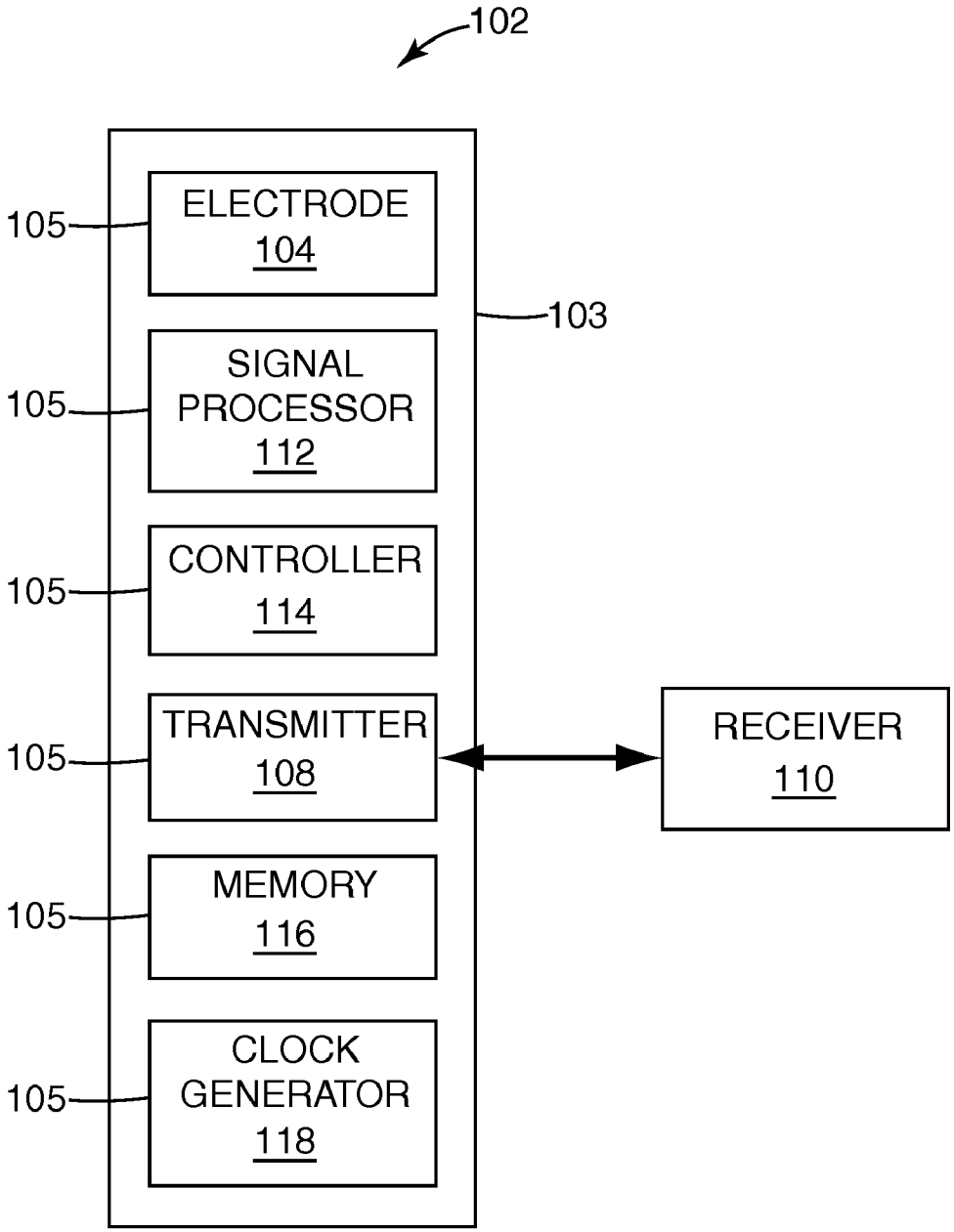
102
103
105
ELECTRODE
104
105
SIGNAL
PROCESSOR
112
105
CONTROLLER
114
105
TRANSMITTER
108
RECEIVER
110
105
MEMORY
116
105
CLOCK
GENERATOR
118

Fig. 13

BIOMEDICAL SENSOR SYSTEM

FIELD

[0001] The present disclosure generally relates to a biomedical sensor system, and particularly, to a biomedical sensor system comprising connectors of variable length.

BACKGROUND

[0002] Therapeutic and diagnostic medical procedures utilize equipment capable of processing signals that are received from a subject or are delivered to a subject. In these procedures, the interface between the subject and the applicable equipment typically includes a sensor. Some sensors, for example, are in the form of electrodes constructed to include a conductor connected electrically to the medical equipment and a conductive medium that is adapted for contact (e.g., with an adhesive) with the subject (e.g., a subject's skin).

SUMMARY

[0003] Some embodiments of the present disclosure provide a biomedical sensor system. The system can include a sensor adapted to create a signal based on a physiological characteristic from a subject, and a hub adapted to receive the signal from the sensor. The signal can include at least one of an electromagnetic signal, an electrical signal, an acoustic signal, a mechanical signal, a thermal signal, a chemical signal, and combinations thereof. The system can further include a connector adapted to couple the sensor and the hub, the connector having a variable length, such that the sensor and the hub can be positioned a variable distance apart by changing the length of the connector. The connector can be adapted to provide a pathway between the sensor and the hub for the signal.

[0004] In some embodiments of the present disclosure, a biomedical sensor system is provided. The system can include a hub, a sensor adapted to create a signal based on a physiological characteristic from a subject, and a connector. The signal can include at least one of an electromagnetic signal, an electrical signal, an acoustic signal, a mechanical signal, a thermal signal, a chemical signal, and combinations thereof. The connecter can be coupled to the sensor and can be adapted to be further coupled to the hub to provide a pathway between the hub and the first sensor for the signal. The connector can have a variable length.

[0005] Some embodiments of the present disclosure provide a method of applying a biomedical sensor system to a subject. The method can include providing a biomedical sensor system comprising a hub, a sensor, and a variable-length connector. The connector can be positioned to couple the sensor and the hub and can be adapted to provide a pathway between the hub and the sensor for at least one of an electromagnetic signal, an electrical signal, an acoustic signal, a mechanical signal, a thermal signal, a chemical signal, and combinations thereof. The method can further include changing the length of the variable-length connector to provide an appropriate distance between the sensor and the hub, and coupling the sensor to the subject.

[0006] Other features and aspects of the present disclosure will become apparent by consideration of the detailed description and accompanying drawings.

BRIEF DESCRIPTION OF THE DRAWINGS

[0007] FIG. **1** is a top plan view of a biomedical sensor system according to one embodiment of the present disclosure, shown positioned on a subject.

[0008] FIG. **2** is a partial perspective exploded bottom view of the biomedical sensor system of FIG. **1**.

[0009] FIG. **3** is a perspective exploded top view of an electrode and connector according to one embodiment of the present disclosure.

[0010] FIG. **4** is a partial perspective view of a connector according to one embodiment of the present disclosure.

[0011] FIG. **5** is a perspective view of a biomedical sensor system according to another embodiment of the present disclosure.

[0012] FIG. **6** is a perspective view of a biomedical sensor system according to another embodiment of the present disclosure.

[0013] FIG. **7** is a perspective view of a biomedical sensor system according to another embodiment of the present disclosure.

[0014] FIG. **8** is a perspective view of a biomedical sensor system according to another embodiment of the present disclosure.

[0015] FIG. **9** is a perspective view of a biomedical sensor system according to another embodiment of the present disclosure.

[0016] FIG. **10** is a cross-sectional view of a connector according to one embodiment of the present disclosure.

[0017] FIG. **11**. is a cross-sectional view of a connector according to another embodiment of the present disclosure.

[0018] FIGS. **12A-12C** illustrate top views of a biomedical sensor system according to another embodiment of the present disclosure.

[0019] FIG. **13** is a schematic block diagram of a hub according to one embodiment of the present disclosure.

DETAILED DESCRIPTION

[0020] Before any embodiments of the invention are explained in detail, it is to be understood that the invention is not limited in its application to the details of construction and the arrangement of components set forth in the following description or illustrated in the following drawings. The invention is capable of other embodiments and of being practiced or of being carried out in various ways. Also, it is to be understood that the phraseology and terminology used herein is for the purpose of description and should not be regarded as limiting. The use of "including," "comprising," or "having" and variations thereof herein is meant to encompass the items listed thereafter and equivalents thereof as well as additional items. Unless specified or limited otherwise, the terms "connected," and "coupled" and variations thereof are used broadly and encompass both direct and indirect connections, and couplings. Further, "connected" and "coupled" are not restricted to physical or mechanical connections or couplings. It is to be understood that other embodiments may be utilized, and structural or logical changes may be made without departing from the scope of the present disclosure. Furthermore, terms such as "top," "bottom," and the like are only used to describe elements as they relate to one another, but are in no way meant to recite specific orientations of the apparatus, to indicate or imply necessary or required orientations of the apparatus, or to specify how the invention described herein will be used, mounted, displayed, or positioned in use.

[0021] The present disclosure generally relates to a biomedical sensor system. By way of example, a biomedical sensor system (e.g., where one or more sensors include electrodes) can be employed in diagnostic procedures and equipment that include electrocardiography for monitoring heart

activity and diagnosing heart abnormalities, electroencephalography for monitoring brain activity and diagnosing brain abnormalities, and electromyography for monitoring the physiological properties of muscles at rest and in contraction. A biomedical sensor system can also be employed in therapeutic procedures and equipment such as in transcutaneous electronic nerve stimulation (TENS) devices that are used for pain management; neuromuscular stimulation (NMS) techniques for the treatment of certain conditions such as scoliosis; defibrillation devices for dispensing electrical energy to a subject (e.g., to defibrillate the heart); and dispersive devices that receive electrical energy that has been applied to an incision made during electrosurgery.

[0022] In addition, a biomedical sensor system can be employed in telemetry and remote monitoring by using technologies that allow data to be transmitted from a sensor coupled to a subject to a receiver that will further manipulate and process the data. Such telemetric and remote monitoring devices include, for example, ambulatory devices, such as a Holter monitor. During remote monitoring, the subject can be continuously monitored over a period of time, sometimes ranging on the scale of days or weeks. In such telemetry and ambulatory applications, providing site accurate application of the biomedical sensors can be important for accurate data accumulation and subject comfort during normal routine activities.

[0023] In general, the biomedical sensor system of the present disclosure is size-configurable, which can allow accommodation of a variety of subject sizes. Accommodating a variety of subject sizes can improve the accuracy of the diagnostic and/or therapeutic procedure being employed, and can enhance subject comfort. Such size-configurable constructions can also optimize signal generation (e.g., in monitoring/diagnostic applications), and can reduce the waste created in manufacturing such constructions. Such size-configurable constructions can further exhibit a low profile with minimal slack between components, which can enhance safety and subject comfort.

[0024] The biomedical sensor system of the present disclosure can be adapted to create one or more signals based on one or more physiological characteristics. A variety of forms of energy can be sensed by one or more sensors of the biomedical sensor system and converted into one or more signals for processing (e.g., in monitoring/diagnostic applications), or the sensor can be used to deliver a variety of forms of energy to a subject (e.g., in therapeutic applications). Whether the sensors are receiving and/or delivering energy to the subject, the sensors can function as transducers to convert one type of energy to another.

[0025] In addition to being adapted to create one or more signals based on one or more physiological characteristics, the biomedical sensor system can be adapted to communicate and/or take action to alter one or more characteristics of devices (e.g., sensors) of the system. For example, in some embodiments, the biomedical sensor system can be adapted to increase the filtering frequency content of signals if the system detects noise of such undesirable frequencies in the desired monitored signal.

[0026] Examples of suitable forms of signals that can be created and/or converted by the biomedical sensor system of the present disclosure include, but are not limited to, electromagnetic signals (e.g., optical signals), heat (i.e., a thermal signal), electrical signals, acoustic signals, mechanical signals, chemical signals, and combinations thereof. Examples of suitable sensors can include, but are not limited to, an electrode (e.g., a sensing electrode, a defibrillation electrode, a dispersive electrode, etc.); an accelerometer; a thermocouple, sensors for sensing one or more of blood oxygen saturation, glucose, body temperature, blood pressure; other suitable sensors; and combinations thereof. For example, a biomedical electrode used to sense the electrical activity of a subject's heart can be configured to convert ionic current into electrical current. By way of further example, a biomedical electrode used to sense the electrical activity of a subject's heart can be configured to convert a potential on the surface of the subject to be processed as an electronic signal in electronics hardware.

[0027] In some embodiments, the biomedical sensor system can also be adapted to transmit signals to a receiver. Such signals can include, but are not limited to, one or more of electromagnetic signals and acoustic signals.

[0028] By way of example only, some embodiments of the present disclosure are described below with reference to monitoring the electrical activity of a subject's heart, for example, in developing an electrocardiogram (ECG). In such embodiments, the sensors include electrodes. However, it should be understood that the biomedical sensor system of the present disclosure can be used to receive a variety of signals from a subject and/or deliver signals (e.g., electrical currents) to a subject in a variety of diagnostic and/or therapeutic procedures. In addition, because the sensors in the embodiments described below include electrodes, the connectors that connect the sensors to a hub are often described as providing means for electrical communication between the hub and the sensors. However, as described above, it should be understood that the connectors can be adapted to provide a pathway for a variety of types of signals that may be communicated between the sensor(s) and the hub(s). Such communication can include communication from the sensor(s) to the hub(s), as well as from the hub(s) to the sensor(s).

[0029] As is generally known in the art, an ECG can be captured via a variety of lead configurations, including, but not limited to 3-lead ECG, 5-lead ECG, and 12-lead ECG, depending on the number of sensing biomedical electrodes placed in contact with the subject. The illustrated embodiments, which are discussed in greater detail below represent a variety of 3-lead and 5-lead ECG configurations, but it should be understood that the same teachings could be applied equally to other lead configurations.

[0030] FIGS. **1** and **2** illustrate a biomedical sensor system **100** according to one embodiment of the present disclosure. FIG. **1** illustrates the biomedical sensor system **100** in a first, unstretched, state, and a second, stretched, state, relative to a subject **50**. FIG. **2** illustrates a portion of the biomedical sensor system **100** in the first, unstretched state, with some of the components exemplified in greater detail. The term "subject" is used to generally refer to a person, an animal, or any other matter of biological origin, receiving a diagnostic and/or therapeutic procedure, but is not intended to be limited to subjects of a diseased state, and can instead include normal, healthy subjects. The subject **50** is illustrated as being a human subject; however, it should be understood that the present disclosure is not limited to human subjects.

[0031] The biomedical sensor system **100** is configured to produce a 3-lead ECG (i.e., I, right arm—left arm (RA-LA); II, right arm—left leg (RA-LL); and III, left arm—left leg (LA-LL)). As shown in FIG. **1**, the biomedical sensor system **100** includes a hub **102**, two satellite electrodes **104**, and two

connectors **106** positioned to couple each satellite electrode **104** to the hub **102**. Electrodes **104** sense differential signals with respect to a reference node or signal. Such a reference node or signal can be provided, for example, by one or more of the other electrodes **104** and/or the hub **102**. The connectors **106** are also adapted to provide a pathway between the electrodes **104** (or other sensors) and the hub **102** for one or more signals that may be communicated between the electrodes **104** and the hub **102**.

The Hub

[0032] In some embodiments, the hub **102** provides a single connection site for the biomedical sensor system **100**, such that the biomedical sensor system **100** can be connected to downstream computing, signal processing, displaying, and/or archiving equipment via the hub **102**. In some embodiments, the hub **102** is a "dummy" hub and serves only to provide a single connection site for the biomedical sensor system **100**. The hub **102** can be hard-wired to downstream equipment, or the hub **102** can wirelessly communicate with downstream computing, processing, displaying and/or archiving equipment. The biomedical sensor system **100** illustrated in FIG. **1** includes one hub **102**, but it should be understood that in some embodiments, the biomedical sensor system **100** includes multiple hubs **102**, and that in such embodiments, each sensor (e.g., electrode **104**) can communicate with one or more hubs **102**.

[0033] In some embodiments, the biomedical sensor system **100** can be used in conjunction with at least a portion of a wireless health monitoring system, such as those described in U.S. Patent Application Publication No. 2007/0279217 (Venkatraman et al.), assigned to HMicro, Inc., Los Altos, Calif., the disclosure of which is incorporate herein by reference. For example, the hub **102** can include at least a portion of the medical signal processor taught by HMicro, and/or the mobile device taught by Venkatraman. In embodiments in which the hub **102** performs at least some of the signal processing, for example, the hub **102** can wirelessly communicate with a receiving device (e.g., a mobile device), which in turn can communicate with a secure server or other computing device via a wireless or wired network.

[0034] One embodiment of the hub **102** is shown schematically in FIG. **13**. As shown in FIG. **13**, in some embodiments, the hub **102** can include a variety of electronic processing modules and/or equipment, to perform at least some initial signal processing of the input signal(s) received from one or more electrodes **104**. In such embodiments, the hub **102** can include a housing **103** and one or more electronics units **105** that are adapted to be positioned within the housing **103**. In some embodiments, the electronic components are packaged together into one electronics unit **105** that can be positioned within the housing **103** prior to use.

[0035] In addition, in some embodiments, as shown in FIGS. **1** and **13**, the hub **102** can include at least one additional electrode **104** (or other sensor, depending on the type of biomedical sensor system being employed) to receive, respectively, at least one additional electrical signal from the subject or to provide a reference node for the other electrode signals. With continued reference to FIG. **13**, in some embodiments, the biomedical sensor system **100** is wireless, and the hub **102** includes a signal processor **112** (such as the medical signal processor taught by Venkatraman et al.) that is adapted to receive one or more signals from one or more of the electrodes **104** (i.e., satellite or hub electrodes **104**) and pass the processed signal(s) to a transmitter **108**. The transmitter **108** is adapted to translate signals from the electrodes **104** into a signal that can be transmitted (e.g., one or more of an electromagnetic signal, an acoustic signal, and combinations thereof), and wirelessly transmit information relative to the signal(s) from the electrodes **104** to a receiver **110**. The receiver **110** can include or be a portion of any necessary downstream computer, signal processor, display and/or archiving equipment, or it can be a separate device that is connected to downstream equipment in a wired or wireless fashion. For example, in some embodiments, the receiver **110** is part of a fixed or mobile device that also includes a signal processor, and which is adapted to communicate with a secure server or other computing device.

[0036] In such embodiments, the transmitter **108** can be adapted to send information relative to all of the signals received, or the signal processor **112** can collect and process the one or more signals from the subject to form a combined signal, and the transmitter **108** can be adapted to transmit the combined signal to the receiver **110**.

[0037] In some embodiments, the hub **102** can further include a controller **114**, which can include the signal processor **112** or can be adapted to communicate with the signal processor **112**. The controller **114** can provide computing, data processing and/or control functions for the hub **102**. The controller **114** can include any of the above signal processor and/or transmitter components, or one or more of the signal processor **112** and the transmitter **108** can include the controller **114**, or a portion thereof. In processing the one or more signals from the subject, the signal processor **112** can amplify, filter, and/or digitize the one or more signals, which can then be sent to the controller **114** and/or the transmitter **108**. Furthermore, in some embodiments, the transmitter **108** can include at least a portion of the signal processor **112**, or vice versa.

[0038] Generally, the controller **114** can be a suitable electronic device, such as, for example, a microcontroller, an embedded computer, a field programmable gate array (FPGA), another suitable digital logic device, or a combination thereof. As such, the controller **114** may include both hardware and software components, and is meant to broadly encompass the combination of such components. As should also be apparent to one of ordinary skill in the art, FIG. **13** is a model of one embodiment of the hub **102**. Many of the modules shown in FIG. **13** and described herein are capable of being implemented in software executed by a microprocessor or a similar device (e.g., that is part of the hub **102** or that is connected to the hub **102** via a wired or wireless connection) or of being implemented in hardware (e.g., that is part of the hub **102** or that is connected to the hub **102** via a wired or wireless connection) using a variety of components including, for example, application specific integrated circuits ("ASICs").

[0039] In some embodiments, the transmitter **108** and/or the signal processor **112** can include a multiplexer to sequentially select signals from the electrodes **104** using any form of multiplexing (e.g., time division multiplexing), an analog-to-digital converter to convert the combined analog signals to digital signals for transmission, a digital signal processor to decimate the digitized signals, and a radio to modulate the digital signals with a carrier signal for transmission to the receiver **110**. The receiver **110** can be positioned near the subject or remote from the subject, depending on the type of diagnostic and/or therapeutic procedure being employed. In

some embodiments, it may be necessary for the hub **102** to receive information from other equipment (e.g., downstream equipment), and in such embodiments, the transmitter **108** can be a transceiver, or the hub **102** can further include a receiver. The receiver portion of the transceiver, or the separate receiver can be adapted to receive a signal (e.g., an electromagnetic signal) and translate it into a data stream that can be sent to the signal processor **112**, the controller **114**, and/or the transmitter **108**.

[0040] Furthermore, as shown in FIG. **13**, in some embodiments, the hub **102** can include memory **116** to at least temporarily store information relative to the signals received from the satellite and/or hub electrodes **104**. Suitable types of memory can include, but are not limited to, one or more of read-only memory (ROM), random-access memory (RAM), volatile memory (e.g., static random-access memory (SRAM)), nonvolatile memory (e.g., FLASH), and combinations thereof. The memory **116** can be adapted to store data relative to the electrode signals prior to transmitting (e.g., via a wired connection or via the transmitter **108**), and/or the memory **116** can be adapted to retain data to later be downloaded to a downstream computer, signal processor, display and/or archiving equipment.

[0041] As shown in FIG. **13**, in some embodiments, the hub **102** can further include a clock generator **118**, which can use an externally connected frequency reference device (e.g., a quartz crystal) to generate timing and clock signals for the hub **102**.

[0042] As mentioned above, the hub **102** includes an additional electrode **104**, such that the biomedical sensor system **100** can take up less total surface area on the subject **50**, as shown in FIG. **1**. In such embodiments, the biomedical sensor system **100** also can be formed of fewer parts and materials, which can reduce the amount of waste produced in manufacturing the biomedical sensor system **100**. In such embodiments, the hub **102** and the two satellite electrodes **104** are each adapted to be coupled to a subject (e.g., to a subject's skin).

The Electrode

[0043] Each electrode **104** can include one or more biomedical electrode configurations that are generally known to those of ordinary skill in the art. For example, the electrode **104** can include, but is not limited to, one or more of a surface electrode (e.g., disposable), a suction electrode, a floating metal body-surface electrode, a dry electrode, or a combination thereof. In embodiments employing a surface electrode, the surface electrode can include, but is not limited to, bulb-and-plate electrodes (e.g., reusable), pregelled electrodes (e.g., disposable), wet gel electrodes, and combinations thereof. Pregelled electrodes can include an electrolyte that is contained in a cohesive gel that is coupled a current collector. Examples of pregelled electrodes can include, but are not limited to solid gel electrodes (e.g., including a non-adhesive crosslinked hydrogel such as guar gum), sticky gel electrodes (e.g., including an adhesive hydrogel), repositionable electrodes (e.g., including a bicontinuous hydrogel pressure sensitive adhesive), and combinations thereof. Wet gel electrodes can include a dry current collector coupled to a pressure sensitive adhesive-coated substrate, and a wet gel or cream. Prior to application of such electrodes, a volume of wet gel or cream can be applied to the dry current collector to function as the conductive interface on the skin. The wet gel or cream in such embodiments typically has no cohesive properties. Such a wet gel or cream can also be used in bulb-and-plate electrodes. The electrodes **104**, including the electrode **104** positioned at the hub **102**, can all be of the same type, different types, or a combination thereof.

[0044] Non-limiting examples of biomedical electrodes include electrodes disclosed in U.S. Pat. Nos. 4,527,087; 4,539,996; 4,554,924; 4,848,353 (all Engel); U.S. Pat. No. 4,846,185 (Carim); U.S. Pat. No. 4,771,713 (Roberts); U.S. Pat. No. 4,715,382 (Strand); U.S. Pat. No. 5,012,810 (Strand et al.); U.S. Pat. No. 5,133,356 (Bryan et al.), U.S. Pat. No. 3,805,769 (Sessions); U.S. Pat. No. 3,845,757 (Weyer); U.S. Pat. No. 4,640,289 (Craighead), and U.S. Pat. No. 5,215,087 (Anderson et al.); the disclosures of which are incorporated herein by reference.

[0045] Further non-limiting examples of such biomedical electrodes include those marketed by a number of companies (e.g., 3M™ RED DOT™ electrodes, available from 3M Company, St. Paul, Minn.). By way of example only, the electrode **104** is illustrated in

[0046] FIG. **2** as a snap-type monitoring electrode **104**, the components of which are described in greater detail below. However, it should be understood that the electrode **104** illustrated FIG. **2** is illustrated by way of example only, and the present disclosure of a biomedical sensor system should not limited to such electrode constructions.

[0047] Additional non-limiting examples of such biomedical electrodes include electrodes that do not contain a gel or electrolyte as an interface between the subject and the current collector. One example of such an electrode is a "capacitive" electrode. In capacitive electrodes, the subject (e.g., the subject's skin) and a metal surface of the sensor function as the plates of a capacitive element.

[0048] With reference to the exploded view of the electrode **104** in FIG. **2**, a metallic stud **151**, (such as stainless steel eyelet No. **304**, commercially available from companies such as Eyelets for Industry, Thomaston, Conn.) couples a plastic, metallic plated eyelet **152** (such as an ABS plastic eyelet silver-plated and chlorided, commercially available from Micron Products, Fitchburg, Mass.) through an aperture in a polymeric backing **153** (such as front label stock of printed white polyethylene, commercially available from Prime Graphics, West Chicago, Ill.). The inner surface of the polymeric backing **153** is coated with an adhesive (such as a phenolic-cured smoke crepe natural rubber based adhesive). Contacting the eyelet **152** at the plated surface is a wood pulp scrim **154** (such as an "Airtex 399" scrim, commercially available from James River Corporation, Green Bay, Wis.), loaded with a quantity of a conductive adhesive **155**, such as pressure sensitive conductive adhesive (such as the pressure sensitive conductive adhesives described in U.S. Pat. Nos. 4,524,087; 4,539,996; 4,848,353; and 4,554,924 (all Engel); 5,296,079 (Duan et al.); U.S. Pat. No. 5,385,679 (Uy et al.); U.S. Pat. No. 5,338,490 (Dietz et al.) and U.S. Pat. No. 5,779,632 (Dietz et al)).

[0049] The scrim **154** and the conductive adhesive **155** reside in an aperture of an adhesive-coated foam **156**. For example, the adhesive-coated foam **156** can include a 0.16 cm thick polyethylene foam coated with either 12 grains of a 91:9 isooctyl acrylate:N-vinyl-2-pyrrolidone copolymer pressure sensitive adhesive or 18 grains of a 94:6 isooctyl acrylate: acrylic acid copolymer tackified with a FORAL™ branded colophony acid rosin, such as "FORAL AX" or "FORAL 85" rosins, commercially available from Hercules Corporation, present in an amount of about 35-40 weight percent of the

copolymer solids. The adhesive-coated side of the adhesive-coated foam **156** is covered by a tabbed antifungal liner **157** (such as **83** pound bleached release paper under the brand "Polyslik 5-8004" treated with "Calgon TK-100" brand fungicide, both liner and treatment commercially available from H. P. Smith Company, Chicago, Ill.). The scrim **154** and the conductive adhesive **155** are protected by a cap **158**, (such as a 0.25 mm "PETG" polyester film commercially available from Weiss Company, Chicago, Ill.) secured in place by dual strips **159** of adhesive tape (such as 3M™ brand "Type 2185" tape, commercially available from 3M Company, St. Paul, Minn.).

[0050] In some embodiments, the means for electrical communication in the electrode **104** can include an electrically conductive tab extending from the periphery of the biomedical electrodes, such as that illustrated and described in U.S. Pat. No. 4,848,353, and/or a conductor member extending through a slit or seam in an insulating backing member, such as that illustrated and described in U.S. Pat. No. 5,012,810. Otherwise, the means for electrical communication can be an eyelet or other snap-type connector such as that disclosed in U.S. Pat. Nos. 4,640,289 and 4,846,185. Further, the means for electrical communication can be a lead wire such as that seen in U.S. Pat. No. 4,771,783.

The Connector

[0051] The biomedical sensor system **100** is size-configurable and conformable to the subject **50**, at least partially because of the variable-length connectors **106**. In some embodiments, the connectors **106** are sized (e.g., in an initial, unstretched, state) to accommodate a relatively small subject but are configurable to accommodate a larger subject. In the embodiment illustrated in FIGS. **1** and **2**, the connector **106** is at least partially formed of a viscoelastic material, such that by applying a force to the connector **106** substantially along the length of the connector **106** (e.g., substantially oriented in the first direction D_1), the connector **106** can be elongated. A variety of viscoelastic materials can be employed, ranging from viscoelastic materials that are largely elastic and exhibit substantial elastic deformations to viscoelastic materials that exhibit substantial plastic deformations and minimal elastic deformations. One exemplary variable-length electrical connector is described in co-pending, commonly assigned, U.S. Patent Application Ser. No. 61/049,678, entitled "Stretchable Electrical Connector," (Oster et al.), and PCT Patent Application No. _____, entitled "Stretchable Conductive Connector," (Oster et al.), the disclosures of which are incorporated herein by reference.

[0052] Elongation of the connector **106** can cause the electrode **104** and the hub **102** to be moved farther apart. This size-configurable feature is shown in detail in FIG. **1**. Due at least in part to the viscoelastic material of the connector **106**, the electrode **104** can be moved from a first position P_1 nearer the hub **102** to a second position P_2 farther from the hub **102** to accommodate a subject's size, and the electrode **104** can remain at the second position P_2 for a desired period of time, for example, throughout the duration of the use of the biomedical sensor system **100**. If the second position P_2 is not sufficient for accurate placement of the electrode **104** (e.g., given the subject's size), force can again be applied to the connector **106** substantially in the first direction D_1, and the electrode **104** can be moved farther away from the hub **102** to a third position (not shown), and so on, until either the plastic properties of the connector **106** are exhausted or the electrode **104** has reached its optimum placement position.

[0053] In some embodiments, the length of the connector **106** can be decreased by stretching the connector **106** substantially along its width (e.g., in a direction substantially perpendicular to the first direction D_1), such that by extending the width of the connector **106**, the length of the connector **106** decreases, and the connector **106** is shortened.

[0054] In some embodiments, as shown in the embodiment illustrated in FIG. **1**, the electrodes **104** have a fixed angular position but a variable radial position, such that the electrodes **104** do not substantially move angularly about the hub **102** (but may move slightly angularly), but can be moved radially toward or away from the hub **102**, due at least in part to the respective variable-length connector **106**.

[0055] The connectors **106** shown in FIG. **1** are each used to couple one electrode **104** to the hub **102**. However, in some embodiments (e.g., in embodiments in which the biomedical sensor system **100** is configured to produce a 12-lead ECG), the biomedical sensor system **100** includes more than one electrode **104** associated with one or more of the connectors **106**. For example, in some embodiments, one or more of the connectors **106** can be coupled to a first electrode **104** positioned a first distance along its length, and a second electrode **104** positioned an additional, farther distance along its length, and so on. Alternatively, in some embodiments, a series of connectors **106** can be employed to connect two or more electrodes **104** in series and provide a variable-length between the successive electrodes **104** to accommodate a variety of subject sizes.

[0056] The connector **106** mechanically and electrically couples at least one electrode **104** to the hub **102**. One connector **106** will be described for clarity and simplicity, but it should be understood that the same explanation applies to all of the connectors **106**. Each connector **106** has a variable length, such that the length of the connector **106** can be changed to change the position of the respective electrode **104** and allow the electrode **104** to be positioned a variable distance from the hub **102**.

[0057] By way of example only, the connector **106** is illustrated in FIG. **2** as comprising a wire as a conductor **162** (e.g., a wire of suitable ductility, such as a copper wire) positioned between a first support member **164**, and a second support member **166** to provide a communication pathway (e.g., an electrical communication pathway) between the hub **102** and the electrode **104**. In the embodiment illustrated in FIG. **2**, the adhesive-coated foam **156** of the electrode **104** is coupled to the bottom surface of the second support member **166**. However, it should be understood that, alternatively, the connector **106** can provide portions or components of the electrode construction, such as the adhesive-coated foam **156**. For example, in some embodiments employing the electrode **104** illustrated in FIG. **2**, the adhesive-coated foam **156** can be integrally formed with a portion of the connector **106** (e.g., a support member **164**, **166**).

[0058] The term "conductor" is used to generally refer to a signal conduction medium that can be used to provide communication from one point to another along the length of the connector **106**. For example, in some embodiments, the term "conductor" can be used to generally refer to an electrically conductive material that can be used to provide electrical communication from one point to another along the length of the connector **106**. In addition, the term "conductor" can refer to coated or insulated conductors, or exposed, uncoated con-

ductors. Finally, the term "conductor" is not meant to indicate only generally cylindrical structures, but rather can take on any shape or configuration necessary to provide communication in the connector **106**. Exemplary electrical conductors can be formed of a variety of materials, including, but not limited to, metal, carbon, graphite, or combinations thereof. In some embodiments, conductive flakes (e.g., formed of metal, carbon, graphite, other suitable conductive materials, or combinations thereof) can function as the conductor **162** and can be provided in a matrix or carrier on one or more of the support members **164**, **166**, or can be embedded directly into one or more of the support members **164**, **166**. In some embodiments employing an insulating coating over the conductor, the coating can be made from a relatively electrically conductive material that can be used as a shielding to minimize any interference from unwanted environmental signals.

[0059] By way of further example, in some embodiments employing optical signals, the term "conductor" can be used to generally refer to one or more optical fibers. In addition, in some embodiments, the term "conductor" can be used to generally refer to a conductor of another energy modality, such as near infrared light modulation. In some embodiments, the biomedical sensor system **100** can include a variety of the above-described energy modalities, sensors, signals, and/or conductors.

[0060] The support members **164**, **166** can be formed of a variety of materials capable of changing in length, for example, capable of elongating when a force is applied substantially in the first direction D_1. Particular utility has been discovered when the support members **164**, **166** are formed of a viscoelastic material, such that the connector **106** may exhibit at least some elastic properties but when sufficient force is applied and/or the connector **106** is elongated past a certain point, the connector **106** does not exhibit immediate elastic recovery. In some embodiments, such viscoelastic properties can allow an electrode **104** to be positioned at the desired location on the subject **50**, without the electrode **104** pulling on the skin due to substantial elastic spring forces associated with the connector **106**. On the contrary, at least some plastic deformation can occur as force is applied to the connector **106** to elongate the connector **106**, allowing the electrode **104** to remain in a second position P_2 for a desired period of time. Such viscoelastic materials are embodied, for example, in 3M™ COMMAND™ adhesive articles, particularly, in the backings of such articles, commercially available from 3M Company, St. Paul, Minn. 3M™ COMMAND™ backings are examples of multilayer laminates of individually viscoelastic materials that exhibit necking at low yield stresses and have high elongations at break. Such backings can be useful as one or more of the support members **164**, **166**. The support members **164**, **166** can be coupled together using, for example, any of the pressure sensitive adhesives described herein. One example of a multilayer laminate that can be employed in one or more of the support members **164**, **166** includes a linear low density polyethylene (LLDPE)/polyethylene (PE) foam/LLDPE trilayer laminate.

[0061] In some embodiments, at least a portion of the connector **106**, such as one or more of the support members **164**, **166** can be formed of a material whose dimensions change in response to heating or cooling. For example, in some embodiments, it may be desirable to reduce the length of the connector **106** after the appropriate length has been determined. By way of example only, at least a portion of the connector **106**, such as one or more of the support members **164**, **166** can be formed of a material that exhibits shrinkage, for example, upon warming or heating (e.g., with a hot air gun), such that the connector **106** can be shortened on demand.

[0062] In some embodiments, the adhesive that couples the electrode **104** (and/or the hub **102**) to the subject (e.g., the adhesive of the adhesive-coated foam **156**) can include a stretch release adhesive, such as those described in U.S. Pat. Nos. 6,527,900, 5,516,581, 5,672,402, and 5,989,708 (Kreckel et al.); U.S. Patent Application Publication No. 2001/0019764 (Bries, et al.); and U.S. Pat. Nos. 6,231,962 and 6,403,206 (Bries et al.), each of which is commonly owned by the Assignee of the present application, and is incorporated herein by reference. In such embodiments, the adhesive can be coupled (e.g., directly or indirectly) to at least a portion of the connector **106**, such as one or more of the support members **164**, **166**, which in turn can function as the "backing" to the stretch release adhesive. As a result, the connector **106** (e.g., one or more of the support members **164**, **166**) can include one or more stretchable layers that can be stretched to a point that causes debonding of the adhesive.

[0063] In such embodiments, the connector **106** can be elongated for proper placement of each satellite electrode **104** (and to accommodate proper placement of the electrode **104** at the hub **102**), and when it is time to remove the electrodes from the subject (e.g., the subject's skin), the connectors **106** can be stretched again until debonding of the adhesives occur, and the hub **102** and the satellite electrodes **104** are removed from the skin. In such embodiments, the adhesive can be designed such that the initial elongation of the connector **106** for placement of the electrode **104** is not sufficient to inhibit the bonding properties of the adhesive.

[0064] Suitable materials for any of the stretchable layers of the connector **106** can include any materials which are stretchable without rupture by at least **50** percent elongation at break and which have sufficient tensile strength so as not to rupture before debonding of the adhesive. Such stretchable materials may be either elastically deformable or plastically deformable, provided sufficient stretching is possible to cause adhesive debonding of both adhesive surfaces for stretch removal.

[0065] Suitable plastic backing materials are disclosed in the above listed U.S. patents to Kreckel et al. and Bries et al. Representative examples of materials suitable for either a polymeric foam or solid polymeric film layer in the connector **106** of the type utilizing a plastic backing include polyolefins, such as polyethylene, including high density polyethylene, low density polyethylene, linear low density polyethylene, and linear ultra low density polyethylene, polypropylene, and polybutylenes; vinyl copolymers, such as polyvinyl chlorides, both plasticized and unplasticized, and polyvinyl acetates; olefinic copolymers, such as ethylene/methacrylate copolymers, ethylene/vinyl acetate copolymers, acrylonitrile-butadiene-styrene copolymers, and ethylene/propylene copolymers; acrylic polymers and copolymers; polyurethanes; and combinations of the foregoing. Mixtures or blends of any plastic or plastic and elastomeric materials such as polypropylene/polyethylene, polyurethane/polyolefin, polyurethane/polycarbonate, polyurethane/polyester, can also be used.

[0066] Polymeric foam layers for use in the plastic backing of the connector **106** can include a density of about 2 to about 30 pounds per cubic foot (about 32 to about 481 kg/m^3), particularly in constructions where the foam is to be stretched to effect debonding of the adhesive. Particular utility has been

found with polyolefin foams, including those available under the trade designations "VOLEXTRA" and "VOLARA," commercially available from Voltek, Division of Sekisui America Corporation, Lawrence, Mass.

[0067] Elastomeric materials suitable as materials for stretch release constructions of the connector **106** include styrene-butadiene copolymer, polychloroprene (neoprene), nitrile rubber, butyl rubber, polysulfide rubber, cis-i, 4-polyisoprene, ethylene-propylene terpolymers (EPDM rubber), silicone rubber, polyurethane rubber, polyisobutylene, natural rubber, acrylate rubber, thermoplastic rubbers such as styrene butadiene block copolymer and styrene-isoprene-styrene block copolymer and TPO rubber materials.

[0068] Solid polymeric film backings can include polyethylene and polypropylene films, such as linear low density and ultra low density polyethylene films, such as a polyethylene film available under the trade designation "MAXILENE 200" from Consolidated Thermoplastics Company, Schaumburg, Ill.

[0069] The connector **106** (e.g., one or more of the support members **164**, **166**) may vary in overall thickness so long as it possesses sufficient integrity to be processable and provides the desired performance with respect to stretching properties for debonding the adhesive from the skin. The specific overall thickness selected for the connector **106** can depend upon the physical properties of the polymeric foam layer(s) and any solid polymeric film layer that make up the connector **106**. Where only one polymeric film or foam layer of a multi-layer connector **106** is intended to be stretched to effect debonding, that layer should exhibit sufficient physical properties and be of a sufficient thickness to achieve that objective.

[0070] A plastic polymeric film layer can be about 0.4 to 10 mils (0.01 mm to 0.25 mm) in thickness, and particularly, can be about 0.4 to 6 mils (0.01 mm to 0.15 mm) in thickness.

[0071] The above-listed connector materials are described as being useful in embodiments employing a stretch release adhesive in the electrodes **104**. However, it should be understood that the connectors **106** can include any of the above-listed materials even in embodiments that do not employ a stretch release electrode adhesive. That is, the above-listed materials can provide the stretchable, variable-length properties to the connectors **106** for placement of the electrodes **104**, even in embodiments that will not require the stretchable properties for removal of the electrodes **104**.

[0072] The adhesive of the adhesive layer(s) of the electrodes **104** can comprise any pressure-sensitive adhesive, particularly any pressure sensitive adhesive suitable for adhesion to the skin. In some embodiments, the adhesion properties generally range from about 4 N/dm to about 200 N/dm, in some embodiments, from about 25 N/dm to about 100 N/dm, at a peel angle of 180°, measured according to PSTC-1 and PSTC-3 and ASTM D 903-83 at a peel rate of 12.7 cm/min. Adhesives having higher peel adhesion levels usually require connectors **106** having a higher tensile strength.

[0073] Suitable pressure-sensitive adhesives include tackified rubber adhesives, such as natural rubber; olefins; silicones, such as silicone polyureas; synthetic rubber adhesives such as polyisoprene, polybutadiene, and styrene-isoprene-styrene, styrene-ethylene-butylene-styrene and styrene-butadiene-styrene block copolymers, and other synthetic elastomers; and tackified or untackified acrylic adhesives such as copolymers of isooctylacrylate and acrylic acid, which can be polymerized by radiation, solution, suspension, or emulsion techniques.

[0074] In some embodiments, the thickness of each adhesive layer can range from about 0.6 mils to about 40 mils (about 0.015 mm to about 1.0 mm), and in some embodiments, from about 1 mils to about 16 mils (about 0.025 mm to about 0.41 mm).

[0075] Adhesives for adhering one polymeric foam layer to either another polymeric foam layer or a solid polymeric film layer include those pressure-sensitive adhesive compositions described above. In some embodiments, the adhesive layer for adjoining one polymeric layer of the connector **106** (e.g., one support member **164** or **166**) to another will be about 1 to 10 rails (about 0.025 to 0.25 mm) in thickness. Other methods of adhering the polymeric layers of the backing (i.e., the support members **164** and **166**) to one another include such conventional methods as co-extrusion or heat welding.

[0076] The adhesive of the electrodes **104** (including the adhesive on the hub **102**) can be produced by any conventional method for preparing pressure-sensitive adhesive tapes. For example, the adhesive can either be directly coated onto a backing (e.g., a support member **164** or **166** of the connector **106**), or it can be formed as a separate layer and then later laminated to the backing

[0077] In some embodiments, the viscoelastic material employed in the connector **106** can allow percent elongations of at least 200%, in some embodiments, at least 300%, and in some embodiments, at least 600%. For example, Table 1 lists the mechanical properties of metallocene catalyzed linear low density polyethylene (LLDPE) and Ziegler Natta catalyzed LLDPE at various processing conditions. Such linear low density polyethylenes would be suitable for use in one or more of the support members **164**, **166** of the connector **106**. The information contained in Table 1 was obtained from Ruksakulpiwat, "Comparative study and structure and properties of Ziegler-Natta and metallocene based linear low density polyethylene in injection moldings," as published in ANTEC-2001, Conference Proceedings, Volume-1, CRC Press, pp 582-586.

TABLE 1

Mechanical properties of metallocene catalyzed LLDPE (mLLDPE5100) and Ziegler Natta catalyzed LLDPE (ZNLLDPE2045) at various processing conditions

Processing	Tensile Strength (MPa)		Yield Strength (MPa)		% Elongation at break	
condition	mLLDPE5100	ZNLLDPE2045	mLLDPE5100	ZNLLDPE2045	mLLDPE5100	ZNLLDPE2045
1	14.49	13.29	13.28	12.33	655.2	726.2
2	1368	13.24	12.99	12.92	657.2	831.8
3	13.35	12.36	12.45	12.39	640.3	769.0
4	13.76	13.21	13.05	12.51	662.1	755.2

TABLE 1-continued

Mechanical properties of metallocene catalyzed LLDPE (mLLDPE5100) and Ziegler Natta catalyzed LLDPE (ZNLLDPE2045) at various processing conditions

Processing	Tensile Strength (MPa)		Yield Strength (MPa)		% Elongation at break	
condition	mLLDPE5100	ZNLLDPE2045	mLLDPE5100	ZNLLDPE2045	mLLDPE5100	ZNLLDPE2045
5	13.47	13.36	12.76	12.75	652.3	777.0
6	13.41	13.28	12.71	12.65	654.8	759.9
7	12.91	12.99	12.31	12.30	665.5	760.4

[0078] In addition, the support members **164**, **166** can provide insulation (e.g., electrical insulation) to the conductor **162** in addition to, or in lieu of, an insulating coating or sheath that may encapsulate the conductor **162**. As a result, particular utility can be found when support members **164**, **166** are employed that not only have a variable length and have the ability to be elongated or shortened, but also which provide insulation to the means for providing communication along the connector **106**.

[0079] In the embodiment illustrated in FIG. **2**, the conductor **162** is positioned between the first and second support members **164** and **166**; however, it should be understood that the conductor **162** can instead be positioned within a single support member (e.g., embedded in a support member, as shown in FIG. **5** and described below). By way of example, the conductor **162** includes a plurality of bends **165** to allow the conductor **162** to maintain electrical communication between the electrode **104** and the hub **102** when the connector **106** is elongated or shortened. The number of bends **165** along the length of the connector **106** and the radius of curvature of each bend **165** can be determined to accommodate the desired extensibility or contractibility of the connector **106**, and the material makeup of the connector **106** (e.g., the material makeup of the one or more support members **164**, **166**).

[0080] In embodiments of the biomedical sensor system **100** that employ a different type of sensor and a different type of communication between the sensor and the hub **102**, the communication pathway can also include a plurality of bends so as to accommodate the variable-length connector **106**, and such embodiments need not only apply to electrical communication.

[0081] The conductor **162** shown in FIG. **2** is positioned such that it will couple to the metallic stud **151** of the electrode **104**. However, it should be understood that the end of the conductor **162** that contacts any conductive element(s) of the electrode **104** can be adapted to couple to such conductive elements in a variety of ways, including, but not limited to, clamps, snap-fit connectors (e.g., the distal end of the conductor **162** can be coupled to a snap-fit connector that will couple to the metallic stud **151** via a snap-fit-type engagement), other suitable coupling means, and combinations thereof

[0082] The conductor **162** is shown as a wire by way of example only. However, additionally or alternatively, in some embodiments, communication between the electrode **104** and the hub **102** can be provided by a variety of other conductive materials. For example, electrical communication can be provided by a variety of electrically conductive materials, including, but not limited to, printed metal inks (e.g., conductive polymer thick film inks, commercially available from Ercon Inc., Wareham, Mass.); conductive thick film laminates (e.g., die cut silver, such as a die cut silver backing from 3M™ RED DOT™ electrodes, available from 3M Company, St. Paul, Minn.); conductive polymers (e.g., Ormecon polyaniline, commercially available from Ormecon GMBH, Ammersbek, Germany; PEDOT (polyethylendioxythiophene), commercially available from Bayer, Leverkusen, Germany); other suitable electrically conductive materials; or a combination thereof. Other suitable means for providing conductivity along the length of the connector **106** to provide electrical communication between the electrode(s) **104** and the hub **102** can be understood by one of skill in the art and can be employed without departing from the spirit and scope of the present disclosure.

[0083] In some embodiments, the biomedical sensor system **100**, or a portion thereof, such as the electrodes **104** and the connectors **106**, can be disposable. In some embodiments, the hub **102** can also be disposable. Such disposable embodiments can be inexpensive and can be made from high-speed, facile, and inexpensive fabrication techniques. In addition, such disposable embodiments can be lightweight, can improve subject comfort, can reduce wiring complexity, can reduce overall costs, can reduce healthcare-associated infections, and can lead to improved patient outcomes. In some embodiments, disposable connectors **106**, or disposable electrode/hub-connector assemblies (e.g., in which one or more electrodes **104** and/or hubs **102** are coupled to one or more connectors **106** to form a disposable assembly) can be formed from any of the 3M™ COMMAND™ adhesive articles materials and constructions described above. For example, in some embodiments, disposable connectors **106** or disposable electrode/hub-connector assemblies can be formed from a multilayer laminate comprising a first 3M™ COMMAND™ backing (e.g., with a corresponding 3M™ COMMAND™ adhesive), a conductive thick film laminate (such as the die cut silver described above), and a second 3M™ COMMAND™ backing. Such a construction would also provide radiotransparency to minimize or eliminate any disruptions when imaging the subject. In such embodiments, the conductive thick film laminate can include the bends **165** shown in FIG. **2**, and one or more of the support members **164**, **166** can include one or more slits or weakened regions **167** to further accommodate varying the length of the connector **106**. For example, in some embodiments, the one or more slits or weakened regions **167** can correspond with every bend **165**, every other bend **165**, every fourth bend **165**, or the like.

[0084] One potential advantage of employing a wire as the conductor **162** over other means of providing electrical communication is that the wire will not exhibit a change in resistance as the length of the connector **106** is changed because the cross-sectional area of the wire will not change as the

length of the connector **106** is changed, but rather the radius of curvature of the bends **165** of the wire will change, and the distance between adjacent segments of the wire will change.

[0085] In some embodiments employing a wire as the conductor **162**, the wire can include a magnet wire (e.g., formed of one or more of copper, tin, carbon/graphite, other suitable wire materials, or a combination thereof) that is coated with a polymer (e.g., such as polyethylene, polyphenylene ether, other suitable polymers, or a combination thereof). Such embodiments of the conductor **162** can provide additional advantages, including, but not limited to, water resistance and electromagnetic shielding (e.g., in x-ray applications).

[0086] In addition, in some embodiments, the connector **106** can also be adapted to be coupled to the subject **50** (e.g., to the subject's skin). For example, in some embodiments, the connector **106** can include an adhesive, such as an adhesive that would be employed in the electrode **104**, such that, for example, when the connector **106** has been extended from a first unstretched state to a second stretched state (i.e., the respective electrode **104** has moved from the first position P_1 to the second position P_2), the connector **106** can be coupled to the subject **50**. In such embodiments, at least a portion of the connector's adhesive can include a stretch release adhesive, such as those described above.

[0087] FIG. **3** illustrates an electrode **204** and a connector **206** according to another embodiment of the present disclosure, wherein like numerals represent like elements. The electrode **204** and the connector **206** share many of the same elements and features described above with reference to the electrode(s) **104** and the connector(s) **106** of FIGS. **1-2**. Reference is made to the description above accompanying FIGS. **1-2** for a more complete description of the features and elements (and alternatives to such features and elements) of the electrode **204** and the connector **206**.

[0088] As shown in FIG. **3**, the electrode **204** includes a conductive adhesive **255** (e.g., an ionically conductive adhesive), such as a pressure sensitive conductive adhesive (such as those mentioned above). The bottom portion of the conductive adhesive **255** shown in FIG. **3** is coupled to a subject in use. The electrode **204** further includes a conductor **252** (e.g., a disk-shaped conductor **252**, as shown in FIG. **3**, but it should be understood that other shapes are possible), which takes the place of the metallic stud **151** and/or the metallic plated eyelet **152** of the electrode **104** described above with reference to FIG. **2**. In some embodiments, the conductor **252** can include silver, a silver ink, and/or a silver-chloride ink (e.g., electrically-conductive polymer thick film inks, commercially available from Ercon Inc., Wareham, Mass.). When the electrode **204** is assembled, the conductor **252** is positioned in electrical communication with the conductive adhesive **255** to provide electrical communication between the conductive adhesive **255** of the electrode **204** and the connector **206**.

[0089] The connector **206** includes a support member **264** and a conductor **262** positioned within an interior **224** of the support member **264** to provide electrical communication between the electrode **204** and a hub (e.g., the hub **102** of the biomedical sensor system **100** shown in FIG. **1**). The support member **264** includes a distal portion **220** and a tubular portion **222** positioned intermediately of the distal portion **220** and a hub. The distal portion **220** and the tubular portion **222** of the connector **206** together define the interior **224**. The distal portion **220** is shaped and sized to be coupled to the conductor **252** of the electrode **204** with minimal surface area of the conductor **252** wasted or unused. Thus, the distal portion **220** of the embodiment illustrated in FIG. **3** has a substantially hollow circular shape, but it should be understood that other shapes can be employed. By way of example only, the tubular portion **222** of the connector **206** is illustrated as being at least partially flattened. Such a flattened structure can enhance conformability of the connector **206** to a subject.

[0090] The support member **264** can be formed of the same materials described above with respect to the support members **164**, **166** of FIG. **2**. In some embodiments, the support member **264** is formed of a viscoelastic material to allow the electrode **204** coupled to one end of the connector **206** (e.g., the distal portion **220** at the distal end of the connector **206**) to be moved from a first position nearer a hub to a second position farther from the hub to accommodate a subject's size, and the electrode **204** can remain at the second position for a desired period of time.

[0091] Similar to the conductor **162** described above, the conductor **262** includes a plurality of bends **265** to allow the conductor **262** to maintain electrical communication between the electrode **204** and a hub when the connector **206** is elongated or shortened.

[0092] The number of bends **265** along the length of the connector **206** and the radius of curvature of each bend **265** can be determined to accommodate the desired extensibility or contractibility of the connector **206**, and the material makeup of the connector **206** (e.g., the material makeup of the support member **264**).

[0093] The conductor **262** is shown in FIG. **3** as extending outwardly of the distal portion **220** via an aperture **226** defined in the distal portion **220**. Particularly, the conductor **262** is shown in FIG. **3** as extending downwardly out of the connector **206** and configured to electrically communicate with the conductor **252** of the electrode **204** when the electrode **204** and the connector **206** are assembled. In some embodiments, the conductor **262** can include a braided conductor, and the end of the braided conductor can be stripped, with the individual conductors splayed out to provide multiple points of contact (e.g., a braided wire can be used to provide multiple points of electrical contact). In some embodiments, the conductor **262** can include a variety of coupling means, such as a snap-fit connector, adapted to couple with a mating connector on the conductor **252** of the electrode **204**. In some embodiments, the conductive adhesive **255** can be put into contact over a portion of the conductor **262**, which can be selected to form a nonpolarizable interface between the conductive adhesive **255** (e.g., which can include water and dissolved salt) and the conductor **262** (e.g., at least a portion of which can be made from silver-silver chloride). Such embodiments can eliminate the conductor **252**.

[0094] The electrode **204** and the connector **206** can be employed in any of the biomedical sensor systems described herein. In addition, the electrode **204** and the connector **206** can be used independently of one another and are illustrated in FIG. **3** together by way of example only. Furthermore, one of ordinary skill in the art should understand that the electrode **204** and the connector **206** can be used in combination with any of the other components described herein with respect to other embodiments.

[0095] FIG. **4** illustrates a connector **306** according to another embodiment of the present disclosure, wherein like numerals represent like elements. The connector **306** shares many of the same elements and features described above with

reference to the connector(s) **106** and **206** of FIGS. **1-3**. Reference is made to the description above accompanying FIGS. **1-3** for a more complete description of the features and elements (and alternatives to such features and elements) of the connector **306**.

[0096] As shown in FIG. **4**, the connector **306** includes a tubular-shaped support member **364** that defines an interior **324**. A conductor **362** can be positioned within the interior **324** of the support member **364** to provide electrical communication between an electrode (e.g., the electrode **104** of the biomedical sensor system **100** shown in FIGS. **1** and **2**) and a hub (e.g., the hub **102** of the biomedical sensor system **100** shown in FIGS. **1** and **2**).

[0097] The support member **364** can be formed of the same materials described above with respect to the support members **164**, **166** of FIG. **2** to provide the same variable-length property to the connector **306**.

[0098] The conductor **362** includes a helical or spiral configuration comprising a plurality of loops or bends **365** to allow the conductor **362** to maintain communication between an electrode and a hub when the connector **306** is elongated or shortened. The number of bends **365** along the length of the connector **306** and the distance between adjacent bends **365** can be determined to accommodate the desired extensibility or contractibility of the connector **306**, and the material makeup of the connector **306** (e.g., the material makeup of the support member **364**).

[0099] In some embodiments, the helical configuration of the conductor **362** can provide more conductor **362** per unit length of the connector **306** than other embodiments, which can accommodate a support member material having greater percent elongation, such that electrical communication is maintained even at high levels of elongation. For example, in some embodiments, the helical conductor **362** can accommodate support members **364** having higher peak strains or percent elongations (e.g., at least about 500%, at least about 600%, etc.).

[0100] In some embodiments, the conductor **362** can be molded with the support member **364**. For example, the support member **364** can be extruded over the prekinked or precoiled conductor **362** (e.g., following a similar method to extruding processes employed with respect to linear conductor, such as wires), or the conductor **362** can held in place by a pressure sensitive adhesive that is coated on the inner surface of the interior **324** of the support member **364**.

[0101] In some embodiments, the connector **306** can include a core (e.g., formed of the same material as the support member **364**), over which the conductor **362** can be wound. The support member **364** can then be extruded over the conductor **362** and core. In some embodiments, the support member **364** includes the core. By way of example only, a shielded stretchable connector **306** can be formed by co-extruding a three layer system of (1) a support member material (e.g., linear low density polyethylene (LLDPE)), (2) a carbon-filled support member material (e.g., carbon-filled LLDPE), and (3) a support member material (e.g., LLDPE) over the conductor **362**.

[0102] The connector **306** can be employed in any of the biomedical sensor systems described herein. In addition, one of ordinary skill in the art should understand that the connector **306** can be used in combination with any of the other components described herein with respect to other embodiments.

[0103] While the connectors **106**, **206**, and **306** are illustrated separately in FIGS. **2**, **3** and **4**, respectively, it should be understood that one or more of the connectors **106**, **206**, **306** can be used in combination. For example, in some embodiments, one or more of the connectors **106**, **206**, **306** can be used in parallel in one biomedical sensor system, or in series to provide electrical communication from a hub to one or more electrodes.

[0104] FIG. **5** illustrates a biomedical sensor system **400** according to another embodiment of the present disclosure, wherein like numerals represent like elements. The biomedical sensor system **400** shares many of the same elements and features described above with reference to the illustrated embodiment of FIGS. **1-2**. Accordingly, elements and features corresponding to elements and features in the illustrated embodiment of FIGS. **1-2** are provided with the same reference numerals in the **400** series. Reference is made to the description above accompanying FIGS. **1-2** for a more complete description of the features and elements (and alternatives to such features and elements) of the embodiment illustrated in FIG. **5**.

[0105] Similar to the biomedical sensor system **100** illustrated in FIGS. **1-2**, the biomedical sensor system **400** is configured to produce a 3-lead ECG. As shown in FIG. **5**, the biomedical sensor system **400** includes a hub **402**, three satellite electrodes **404**, and three connectors **406** positioned to couple each satellite electrode **404** to the hub **402**. Each connector **406** is also adapted to provide a pathway for communication of a signal between the electrode **104** and the hub **102** (e.g., an electrical signal).

[0106] Unlike the biomedical sensor system **100** shown in FIGS. **1** and **2**, the hub **402** of the biomedical sensor system **400** does not include an additional electrode. As a result, in order to be configured for a 3-lead ECG, the biomedical sensor system **400** includes three satellite electrodes **404**. The hub **402** can be coupled to a subject, for example, by employing a similar adhesive to that employed by the satellite electrodes **404** (e.g., a pressure-sensitive adhesive), or the hub **402** can be positioned near the subject, without being coupled to the subject. Whether the hub **402** is coupled to the subject, the hub **402** can remain near the subject in use to allow the biomedical sensor system **400** to maintain a low profile and to conform to the subject (e.g., to conform to a patient's body).

[0107] One of the satellite electrodes **404** is shown in a first position P_1' nearer the hub **402** and a second position P_2' farther away from the hub **402**. As demonstrated by the first and second positions P_1', P_2' of the electrode **404**, the electrode **404** can be moved substantially radially toward and away from the hub **402** due at least in part to elongation of the respective connector **406**. Similar to the connector **106** described above, the connector **406** is adapted to allow an electrode **404** to be moved radially with respect to the hub **402** without allowing substantial angular movement with respect to the hub **402**.

[0108] Furthermore, as shown in one of the connectors **406** illustrated in FIG. **5**, in some embodiments, the connector **406** can include a conductor **462** comprising a plurality of bends **465** that is embedded in a support member **464**, such that the conductor **462** provides electrical communication between the respective electrode **404** and the hub **402** while also having the capacity to accommodate an elongation, or shortening, of the connector **406**/support member **464**. Alternatively, the connector **406** can take on the form of any of the previously-described connectors **106**, **206**, **306**, or another suitable

form that provides a variable length and electrical communication between one or more electrodes **404** and the hub **402**.

[0109] The conductor **462** can be embedded in the support member **464** in a variety of manners. For example, the conductor **462** can be molded, extruded, heat sealed, or otherwise formed with the support member **464**.

[0110] FIG. **6** illustrates a biomedical sensor system **500** according to another embodiment of the present disclosure, wherein like numerals represent like elements. The biomedical sensor system **500** shares many of the same elements and features described above with reference to the illustrated embodiment of FIGS. **1-2**. Accordingly, elements and features corresponding to elements and features in the illustrated embodiment of FIGS. **1-2** are provided with the same reference numerals in the **500** series. Reference is made to the description above accompanying FIGS. **1-2** for a more complete description of the features and elements (and alternatives to such features and elements) of the embodiment illustrated in FIG. **6**.

[0111] The biomedical sensor system **500** is configured to produce a 5-lead ECG. As shown in FIG. **6**, the biomedical sensor system **500** includes a hub **502**, four satellite electrodes **504**, and four connectors **506** positioned to mechanically and electrically couple each satellite electrode **504** to the hub **502**. Similar to the biomedical sensor system **100** illustrated in FIGS. **1** and **2**, the hub **502** includes an electrode **504**. All of the electrodes **504** can be of the same or a different type, or a combination thereof. Each of the hub **502** and the four satellite electrodes **504** can be adapted to be coupled to a subject's skin, for example, by employing an appropriate pressure-sensitive adhesive.

[0112] Two of the satellite electrodes **504** are shown in a first position P_1" nearer the hub **502** and a second position P_2" farther away from the hub **502**. As demonstrated by the first and second positions P_1", P_2" of the electrode **504**, the electrode **504** can be moved substantially radially toward and away from the hub **502** due at least in part to elongation of the respective connector **506**. Similar to the connector **106** described above, the connector **506** is adapted to allow an electrode **504** to be moved radially with respect to the hub **402** without allowing substantial angular movement with respect to the hub **502**. The connector **506** can take on the form of any of the previously-described connectors **106**, **206**, **306**, **406** or another suitable form that provides a variable length and a communication pathway between one or more electrodes **504** and the hub **502**.

[0113] FIG. **7** illustrates a biomedical sensor system **600** according to another embodiment of the present disclosure, wherein like numerals represent like elements. The biomedical sensor system **600** shares many of the same elements and features described above with reference to the illustrated embodiment of FIGS. **1-2**. Accordingly, elements and features corresponding to elements and features in the illustrated embodiment of FIGS. **1-2** are provided with the same reference numerals in the **600** series. Reference is made to the description above accompanying FIGS. **1-2** for a more complete description of the features and elements (and alternatives to such features and elements) of the embodiment illustrated in FIG. **7**.

[0114] Similar to the biomedical sensor system **400** illustrated in FIG. **5**, the biomedical sensor system **600** is configured to produce a 3-lead ECG. As shown in FIG. **7**, the biomedical sensor system **600** includes a hub **602**, three satellite electrodes **604**, and three connectors **606** positioned to mechanically and electrically couple each satellite electrode **604** to the hub **602**.

[0115] In addition, the hub **602** of the biomedical sensor system **600** does not include an additional electrode. As a result, in order to be configured for a 3-lead ECG, the biomedical sensor system **600** includes three satellite electrodes **604**. The hub **602** can be coupled to a subject, for example, by employing a similar adhesive to that employed by the satellite electrodes **604** (e.g., a pressure-sensitive adhesive), or the hub **602** can be positioned near the subject, without being coupled to the subject. Whether the hub **602** is coupled to the subject, the hub **602** can remain near the subject in use to allow the biomedical sensor system **600** to maintain a low profile and to conform to the subject.

[0116] For the sake of clarity and simplicity, one connector **606** will be described, but it should be understood that the description equally applies to all of the connectors **606** of the biomedical sensor system **600**. The connector **606** is substantially comprised of a conductor **662**, which includes an insulating coating or sheath that encapsulates and insulates the conductor **662** from the environment. As shown in FIG. **7**, for example, the conductor **662** is adapted to be wound around a spool positioned at the hub **602**, such that the connector **606** can be moved radially and angularly with respect to the hub **602** to position the respective electrode **604** in the desired position for accurate data acquisition. For example, the connector **606** can include a yo-yo configuration.

[0117] A variety of connector reel designs can be employed to achieve the biomedical sensor system **600** illustrated in FIG. **7**. For example, in some embodiments, the connectors **606** can all be wound around a common spool at the hub **602**. In some embodiments, the connectors **606** can each be wound around an independent spool, such that the winding of each connector **606** is independent of the winding of another connector **606**. In some embodiments, the connectors **606** are retractable into and out of the hub **602**, for example, by employing a winding roll, reel or spool that includes a cammed surface and a biasing force to maintain the connector **606** in various discrete positions and desired lengths. No matter what type of winding or retractable mechanism is employed, the biomedical sensor system **600** can be configured such that the connector **606** includes the winding mechanism, or the hub **602** includes the winding mechanism.

[0118] The connector **606** has a variable length by virtue of being wound or retracted (e.g., at the hub **602**) to allow the electrode **604** to be moved toward and away from the hub **602**. Each of the satellite electrodes **604** is shown in a first position P_1'" nearer the hub **602** and a second position P_2'" farther away from the hub **602**. As demonstrated by the first and second positions P_1'", P_2'" of the electrode **604**, the electrode **604** can be moved radially toward and away from the hub **602** due at least in part by extending the connector **606** (e.g., by unwinding a desired amount of the connector **606**). In addition, each of the second positions P_2'" is shown in FIG. **7** as being located an angular distance from each of the respective first positions P_1'" to illustrate the ability of the connectors **606** to move the electrodes **604** radially and angularly with respect to the hub **602**. However, each electrode **604** can also be moved substantially only radially or substantially only angularly with respect to the hub **602** and need not always be moved radially and angularly, depending on the winding mechanism employed in the connector **606** and/or the hub **602**.

[0119] FIG. **8** illustrates a biomedical sensor system **700** according to another embodiment of the present disclosure, wherein like numerals represent like elements. The biomedical sensor system **700** shares many of the same elements and features described above with reference to the illustrated embodiment of FIGS. **1-2**. Accordingly, elements and features corresponding to elements and features in the illustrated embodiment of FIGS. **1-2** are provided with the same reference numerals in the **700** series. Reference is made to the description above accompanying FIGS. **1-2** for a more complete description of the features and elements (and alternatives to such features and elements) of the embodiment illustrated in FIG. **8**.

[0120] Similar to the biomedical sensor system **100** illustrated in FIG. **1**, the biomedical sensor system **700** is configured to produce a 3-lead ECG. As shown in FIG. **8**, the biomedical sensor system **700** includes a hub **702**, two satellite electrodes **704**, and two connectors **706** positioned to mechanically and electrically couple each satellite electrode **704** to the hub **702**.

[0121] Similar to the biomedical sensor systems **100** and **500** illustrated in FIGS. **1** and **6**, respectively, and described above, the hub **702** includes an additional electrode **704**, such that the biomedical sensor system **700** can take up less total surface area on the subject. In such embodiments, the hub **702** and the two satellite electrodes **704** can each be adapted to be coupled to skin.

[0122] For the sake of clarity and simplicity, one connector **706** will be described, but it should be understood that the description equally applies to all of the connectors **706** of the biomedical sensor system **700**. The connector **706** includes a support member **764** to provide the mechanical coupling between the hub **702** and the electrode **704**, and one or more conductors **762** positioned within the support member **764** to provide the communication pathway (e.g., for electrical communication) between the hub **702** and the electrode **704**. Particularly, the support member **764** (and conductor(s) **762**) includes a plurality of alternating folds or bends **730** that define sections **732** of the support member **764** and the connector **706**.

[0123] The sections **732** of the support member **764**/connector **706** can be collapsed upon one another to decrease the length of the connector **706**, or the sections **732** can be extended apart from one another to increase the length of the connector **706**. As a result, at least a portion of the connector **706** can include an accordion-style configuration, and the length of the connector **706** can vary, depending on the angle between adjacent sections **732** of the connector **706**. For example, the adjacent sections **732** of the connector **706** can be positioned relatively close to one another when the folds **730** are folded to a low-angle position, and the adjacent sections **732** of the connector **706** can be positioned further apart from one another when the folds **730** are extended to a high-angle position.

[0124] As shown in FIG. **8**, one electrode **704** is shown in a first position P_1"" when the connector **706** is collapsed, and a second position P_2"" (shown in phantom lines) when the connector **706** is extended. As a result, the electrode **704** is positionable toward and away from the hub **702** due at least in part to the variable-length connector **706**. Similar to other embodiments described above, the electrode **704** is movable radially with respect to the hub **702**, without being substantially movable angularly with respect to the hub **702**.

[0125] The electrode **704** can be positioned intermediately of the first position P_1"" and the second position P_2"". In such positions, the connector **706** can remain substantially low-profile and conformable to a subject by maintaining any of the unused or unextended portions of the connector **706** in a collapsed state (i.e., by maintaining a low angle between adjacent sections **732** of the unused portion of the connector **706**) to minimize any slack in the connector **706**.

[0126] In some embodiments, the connector **706** can include an adhesive (e.g., a pressure sensitive adhesive) between adjacent sections **732** of the connector **706**, such that the connector **706** can be maintained in a compressed configuration until enough force is applied to the connector **706** substantially along the length of the connector **706** (e.g., radially away from the hub **702** and substantially in a first direction D_1') to overcome the peel force of the adhesive.

[0127] In the embodiment illustrated in FIG. **8**, the folds **730** are oriented substantially vertically (e.g., in an x-z plane). However, it should be understood that other configurations or orientations of the folds **730** can also be employed, such that the folds **730** are oriented substantially horizontally (e.g., in an x-y plane), or the folds **730** can include a combination of a vertical and a horizontal orientation.

[0128] The distance between each adjacent fold **730** (i.e., the length of each section **732**) of the connector **706** can be sized as necessary for a given application. For example, in some embodiments, the distance between each adjacent fold **730** in the connector **706** is relatively short, such that when the electrode **704** is positioned in its first position P_1"", the height of the connector **706** is low enough to allow the connector **706** to conform to a subject and to maintain a relatively low profile.

[0129] The support member **764** and the conductor **762** can take on any of the forms described above with respect to the connectors **106**, **206**, **306**, **406**, **506** and **606**, or combinations thereof. That is, the conductor **762** can be housed within an interior of the support member **764**, or the conductor **762** can be embedded within the support member **764**, the conductor **762** can include a plurality of bends, the conductor **762** can be substantially straight with respect to the support member **764**, the conductor **762** can be positioned in between two support members **764**, or a combination thereof.

[0130] In addition, the support member **764** can be formed of a variety of materials, including the materials described above with respect to the support members **164**, **264**, **364**, and **464**. In some embodiments, the conductor **762** is a flat piece of conductive material (e.g., a conductive metal, carbon ribbon, other suitable conductive materials, and combinations thereof) that folds and bends to form the accordion-style configuration and includes at least a thin layer or sheath of an insulating coating to encapsulate and insulate the conductive material. In such embodiments, the support member **764** can include the insulating coating or sheath.

[0131] In some embodiments, the connector **706** can include a rolled configuration, rather than an accordion-style configuration, such that a variable length of the connector **706** can be unrolled, rather than unfolded, to move the respective electrode **704** toward and away from the hub **702**.

[0132] FIG. **9** illustrates a biomedical sensor system **800** according to another embodiment of the present disclosure, wherein like numerals represent like elements. The biomedical sensor system **800** shares many of the same elements and features described above with reference to the illustrated embodiment of FIGS. **1-2**. Accordingly, elements and fea-

tures corresponding to elements and features in the illustrated embodiment of FIGS. **1-2** are provided with the same reference numerals in the **800** series. Reference is made to the description above accompanying FIGS. **1-2** for a more complete description of the features and elements (and alternatives to such features and elements) of the embodiment illustrated in FIG. **9**.

[0133] Similar to the biomedical sensor system **100** illustrated in FIG. **1**, the biomedical sensor system **800** is configured to produce a 3-lead ECG. As shown in FIG. **9**, the biomedical sensor system **800** includes a hub **802**, two satellite electrodes **804**, and two connectors **806** positioned to mechanically and electrically couple each satellite electrode **804** to the hub **802**.

[0134] Similar to the biomedical sensor systems **100** and **500** illustrated in FIGS. **1** and **6**, respectively, and described above, the hub **802** includes an additional electrode **804**, such that the biomedical sensor system **800** can take up less total surface area on the subject. In such embodiments, the hub **802** and the two satellite electrodes **804** can each be adapted to be coupled to skin.

[0135] For the sake of clarity and simplicity, one connector **806** will be described, but it should be understood that the description equally applies to all of the connectors **806** of the biomedical sensor system **800**. The connector **806** includes a support member **864** to provide the mechanical coupling between the hub **802** and the electrode **804**, and one or more conductors **862** positioned within the support member **864** to provide the communication pathway (e.g., for electrical communication) between the hub **802** and the electrode **804**. Particularly, the support member **864** (and conductor(s) **862**) includes one or more folds or bends **830** in between ends **833** that are coupled to the hub **802** and the electrode **804**. The support member **864** (and conductor(s) **862**) is folded lengthwise upon itself into overlapping sections **832** of the support member **864** and the connector **806**.

[0136] As shown in FIG. **9**, in some embodiments, the biomedical sensor system **800** can further include a sheath **831** that can form a portion of the connector **806** or be used in conjunction with the connector **806**. The sheath **831** surrounds at least a portion of the folded sections **832** of the support member **864** but allows access to the ends **833** of the support member **864** (and conductor(s) **862**). In this way, the sheath **831** can consolidate the unused portions of the support member **864**, which can reduce slack in the overall connector **806**, can minimize potential entanglement, and can improve conformability of the connector **806** (and biomedical sensor system **800**) to a subject. In some embodiments, the entire folded sections **832** can be concealed by the sheath **831**, and in some embodiments, at least a portion of the folded sections **832** can extend at least partially beyond the ends of the sheath **831**.

[0137] The sections **832** of the support member **864**/conductor **862** can be collapsed upon one another to decrease the length of the connector **806** until a greater length is desired. At that time, the ends **833** can be pulled with sufficient force to cause the support member **864**/conductor **862** to slide within the sheath **831**, thereby reducing the length of the folded portion of the support member **864**/conductor **862** and increasing the overall length of the connector **806**, which increases the distance between the hub **802** and the respective electrode **804**. As a result, at least a portion of the connector **806** can include an accordion-style configuration, particularly, a lengthwise accordion-style configuration, and the length of the connector **806** can vary, depending on the length of the folded sections **832** of the support member **864**/conductor **862**.

[0138] As shown in FIG. **9**, one electrode **804** is shown in a first position P_1'''' when the connector **806** is collapsed, and a second position P_2'''' (shown in phantom lines) when the connector **806** is extended. As a result, the electrode **804** is positionable toward and away from the hub **802** due at least in part to the variable-length connector **806**. Similar to other embodiments described above, the electrode **804** is movable radially with respect to the hub **802**, without being substantially movable angularly with respect to the hub **802**.

[0139] The electrode **804** can be positioned intermediately of the first position P_1'''' and the second position P2''''. In such positions, the connector **806** can remain substantially low-profile and conformable to a subject by maintaining any of the unused or unextended portions of the connector **806** in a folded state and/or within the sheath **831** to minimize any slack in the connector **806**.

[0140] In some embodiments, the connector **806** can include an adhesive (e.g., a pressure sensitive adhesive) between adjacent sections **832** of the connector **806**, such that the connector **806** can be maintained in a folded configuration until enough force is applied to the ends **833** of the support member **864**/conductor **862** substantially along the length of the connector **806** (e.g., radially away from the hub **802** and substantially in a first direction D_1") to overcome the peel force of the adhesive.

[0141] In the embodiment illustrated in FIG. **9**, the folded sections **832** are oriented substantially longitudinally with respect to the length of the connector **806**. However, it should be understood that other configurations or orientations of the folded sections **832** can also be employed, such as the accordion-style configurations of the biomedical sensor system **700** shown in FIG. **8**, or alternatives thereof described above.

[0142] By way of example only, in the embodiment illustrated in FIG. **9**, the support member **864** includes two longitudinal folds **830** that form three overlapping folded sections **832**. However, the number of folds **830** and the overall folding scheme or arrangement of folds **830** can be varied as necessary for a given application. For example, in some embodiments, a greater extension ratio is needed in the connector **806**; however, this needs to be balanced with the overall volume or profile of the sheath **831** and the folded sections **832** of the connector **806**. Exemplary alternative folding schemes are illustrated in FIGS. **10** and **11**.

[0143] FIG. **10** illustrates a connector **806**A in which the folded portion of the support member **864**A/conductor **862**A that is positioned within a sheath **831**A can include four upper, shorter folded sections **832**A stacked upon one lower and longer folded section **832**A. Such a configuration can be formed, for example, by making four folds **830**A in the support member **864**A/conductor **862**A. FIG. **11** illustrates another connector **806**B in which the folded portion of the support member **864**B/conductor **862**B this is positioned within the sheath **831**B can include four folds **830**B and five folded sections **832**B to increase the extension capability of the connector **806**B (e.g., as compared to a connector **806** that includes a similarly dimensioned sheath **831** and only three folded sections **832**).

[0144] With continued reference to FIG. **9**, the sheath **831** can be formed of a variety of materials, including, but not limited to, metal, polymer, textiles, or combinations thereof. For example, in some embodiments, the sheath **831** can be

formed of an elastic material (e.g., a polymer, a textile, or a combination thereof); a crimpable material (e.g., a metal); heat shrink tubing; a cast-on or brushed-on elastomer; other suitable materials adapted to hold the folded sections **832** firmly while allowing them to slide freely when a tensile force is applied to the ends **833** of the support member **864**/conductor **862**; or a combination thereof.

[0145] In addition, in some embodiments, the sheath **832** and/or the support member **864**/conductor **862** can include a low friction material or can be lubricated to reduce the sheath-support member/conductor interfacial friction. Examples of lubrication can include, but are not limited to, externally-applied dry, liquid, or paste lubricants, lubricants embedded in one or both of the support member **864** and the sheath **831**, forming one or both of the support member **864** and the sheath **831** of a low friction material (i.e., a material having a low coefficient of friction), or combinations thereof.

[0146] In some embodiments of the biomedical sensor system **800**, one or a plurality of connectors **806** can be employed to connect one electrode **804** to the hub **802**. In embodiments employing a plurality of connectors **806** associated with one electrode **804**, the connectors **806** can be connected in series, parallel, or a combination thereof.

[0147] In some embodiments, the support member **864** can be extended and pulled from the sheath **831** to increase the length of the connector **806** but cannot be retracted or easily reinserted into the sheath **831** to decrease the length of the connector **806**. However, in some embodiments, the support member **864** and/or the sheath **831** can be adapted to facilitate moving the support member **864** into and out of the sheath **831**, and into and out of being in a folded configuration, such that the length of the connector **806** can be easily increased or decreased.

[0148] The support member **864** and the conductor **862** can take on any of the forms described above with respect to the connectors **106**, **206**, **306**, **406**, **506** and **606**, or combinations thereof. That is, the conductor **862** can be housed within an interior of the support member **864**, or the conductor **862** can be embedded within the support member **864**, the conductor **862** can include a plurality of bends, the conductor **862** can be substantially straight with respect to the support member **864**, the conductor **862** can be positioned in between two support members **864**, or a combination thereof.

[0149] The support member **864** can be formed of a variety of materials, including the materials described above with respect to the support members **164**, **264**, **364**, and **464**. In some embodiments, the conductor **862** is a flat piece of conductive material (e.g., a conductive metal, carbon ribbon, other suitable conductive materials, and combinations thereof) that folds and bends to form the folded sections **832** and includes at least a thin layer or sheath of an insulating coating to encapsulate and insulate the conductive material. In such embodiments, the support member **864** can include the insulating coating or sheath.

[0150] In some embodiments, the connector **806** can include a rolled configuration, rather than a folded configuration, such that a variable length of the connector **806** can be unrolled, rather than unfolded, to move the respective electrode **804** toward and away from the hub **802**.

[0151] FIGS. **12**A-**12**C illustrate a biomedical sensor system **900** according to another embodiment of the present disclosure, wherein like numerals represent like elements. The biomedical sensor system **900** shares many of the same elements and features described above with reference to the illustrated embodiments of FIGS. **9**-**11**. Accordingly, elements and features corresponding to elements and features in the illustrated embodiments of FIGS. **9**-**11** are provided with the same reference numerals in the **900** series. Reference is made to the description above accompanying FIGS. **9**-**11** for a more complete description of the features and elements (and alternatives to such features and elements) of the embodiment illustrated in FIGS. **12**A-**12**C.

[0152] As shown in FIGS. **12**A-**12**C, the biomedical sensor system **900** includes a hub **902** (that includes an electrode **904**) that is illustrated as being connected to multiple electrodes **904** via multiple connectors **906**, with only one electrode **904** and connector **906** shown in detail, for simplicity and clarity. The connector **906** shown in FIGS. **12**A-**12**C illustrates one example of making a variable-length connector **906**, of which the folded or unextended portion can be covered by a sheath **931**.

[0153] As shown in FIG. **12**A, the sheath **931** is coupled to (e.g., integrally formed with) a support member **964** of the connector **906**, and in its unwrapped state has a flat configuration. The sheath **931** includes a base portion **935** and a tab portion **937**. In the embodiment illustrated in FIGS. **12**A-**12**C, the tab portion **937** is larger than the base portion **935** and extends further from the remainder of the support member **964** than the base portion **935**, but this configuration is shown by way of example only, and other configurations of the base portion **935** and the tab portion **937** can be appreciated by one of skill in the art.

[0154] As shown in FIG. **12**B, the connector **906** further includes a conductor **962**, and the support member **964** and/or the conductor **962** can be folded forming folds or bends **930**. For example, the support member **964**/conductor **962** can be folded (e.g., longitudinally) upon itself to decrease its length and to form one or more folded sections **932**. The support member **964** can be folded up adjacent the flat sheath **931**.

[0155] As shown in FIG. **12**C, the sheath **931** can then be wrapped around the folded sections **932** of the support member **964**. For example, the tab portion **937** can be wrapped around the folded sections **932** and coupled to the base portion **935** in order to form a sheath **931** that surrounds at least a portion of the folded sections **932** of the connector **906** but which allows the length of the connector **906** to vary to accommodate a given application, subject size, etc. In some embodiments, the entire folded sections **932** can be concealed by the sheath **931**, and in some embodiments, as shown in FIG. **12**C, at least a portion of the folded sections **932** can extend at least partially beyond the ends of the sheath **931**.

[0156] The base portion **935** and the tab portion **937** can be coupled together via a variety of coupling means, including, but not limited to, press-fit or friction-fit engagement, snap-fit engagement, magnets, hook-and-loop fasteners, adhesives, cohesives, clamps, heat sealing, stitches, staples, screws, nails, rivets, brads, crimps, welding (e.g., sonic (e.g., ultrasonic) welding), any thermal bonding technique (e.g., heat and/or pressure applied to one or both of the components to be coupled), other suitable coupling means, or combinations thereof.

[0157] By way of example only, the embodiment illustrated in FIGS. **12**A-**12**C can be formed by high-volume automated assembly applications, where the hub **902** (or a portion thereof), the electrode **904** (or a portion thereof), and the connector **906** can be fabricated by die-cut flex circuits.

[0158] Some embodiments of the biomedical sensor system of the present disclosure include connectors that allow an

electrode to be moved away from a hub without allowing substantial return of the electrode toward the hub. That is, depending on the type of material employed in the connector, some connectors allow equal and opposite motion of the electrode to occur (e.g., some embodiments of the connectors **606** and **706**), while in other connectors (e.g., some embodiments of the connectors **106**, **206**, **306**, **406**, and **506**), at least above a certain threshold, at least some of the kinetic energy applied to the connector is taken up as viscous flow in the material (e.g., in the support member of the connector), causing the material to change shape (e.g., plastically deform) and elongate without substantial elastic recovery.

[0159] Any combinations of the above described biomedical sensor systems **100**, **400**, **500**, **600**, **700**, **800**, **900** can be employed. For example, one or more of the connectors **106**, **206**, **306**, **406**, **506**, **606**, **706**, **806**, **906** or combinations thereof, can be employed with one or more of the electrodes **104**, **204**, **404**, **504**, **604**, **704**, **804**, **904** (or other sensors) and/or one or more of the hubs **102**, **402**, **502**, **602**, **702**, **802**, **902** in any orientation or configuration (e.g., 3-lead, 5-lead, 12-lead, etc.) to achieve a biomedical sensor system in which the one or more sensors are positionable by one or more variable-length connectors.

Method of Making

[0160] The biomedical sensor systems of present disclosure can be manufactured in a variety of manners, including modular designs. For example, in some embodiments, a hub, one connector, and one sensor are manufactured as one unit, and additional sensor-connector units can be coupled to the hub, as desired (e.g., to form a 3-lead, 5-lead, or 12-lead ECG configuration, etc.). In some embodiments, a hub is a separate unit, each sensor and connector are manufactured together as one unit, and each sensor-connector unit can be coupled to the hub or other sensor-connector units, as desired. Furthermore, in some embodiments, a hub and one or more connectors are manufactured as one unit, and the sensors can be added later (e.g., at the time of application to a subject). In some embodiments, each sensor, each connector, and a hub are formed individually to be completely modular, and the desired number of sensors, connectors and hubs are determined and coupled together later (e.g., at the time of application to a subject). Finally, in some embodiments, the hub, desired number of sensors, and desired number of connectors are formed as one unit for a specific application to allow the system to be applied with minimal pre-application coupling steps required.

Method of Applying

[0161] One exemplary method of applying a biomedical sensor system to a subject will be described, using the biomedical sensor system **500** illustrated in FIG. **6** by way of example only to illustrate how the biomedical sensor system **500** can be applied to a subject to acquire a 5-lead ECG. One of skill in the art will understand how the method of applying the biomedical sensor system **500** to a subject will apply to other embodiments of the biomedical sensor system of the present disclosure.

[0162] In some embodiments, the biomedical sensor system **500** can be applied to a subject by first dry-fitting the biomedical sensor system **500** to the subject. That is, the user (e.g., medical practitioner) can initially adjust the length of the connectors **506** without removing any liners from the hub **502** of electrodes **504** or activating any adhesives. To dry-fit the biomedical sensor system **500** to the subject, the user can hold the biomedical sensor system **500** in one hand and use the other hand to pull each of the electrodes **504** radially away from the hub **502** by extending the respective connectors **506** until the user has moved each electrode **504** to approximately its desired location for acquiring an ECG. The user can hold the biomedical sensor system **500** up to the subject before, during and/or after dry-fitting the biomedical sensor system **500** to visually verify the initial electrode positions.

[0163] After the user has dry-fit the biomedical sensor system **500**, the user can first position the hub electrode **504** or one of the satellite electrodes **504** (e.g., by removing any liner and/or activating any adhesive at the hub **502** or satellite electrode **504**). Then, the user can position the remaining electrodes **504**, stretching each respective connector **506** more, if necessary, and being careful to extend each connector **506** sufficiently to minimize any tension on the subject (e.g., on the skin of the subject), while also minimizing slack in the connector **506**.

[0164] The above method of applying the biomedical sensor system **500** is described by way of example only; however, it should be understood that a variety of other suitable methods can be employed to apply the biomedical sensor system of the present disclosure to a subject, and the present disclosure is not limited to the exact set or sequence of steps described above. In addition, as mentioned above, some embodiments of the biomedical sensor system of the present disclosure include modular components. As a result, it may be necessary for a user to assemble various components of the biomedical sensor system together prior to or during application to a subject. For example, in embodiments employing separate hub, connectors and sensors, the above steps can be proceeded by coupling (e.g., mechanically and/or to provide a communication pathway) one end of each connector to the hub and the opposite end of each connector to a sensor until the biomedical sensor system includes the desired number of connectors and sensors.

[0165] The following working examples are intended to be illustrative of the present disclosure and not limiting.

EXAMPLES

Example 1

A Connector Having an Electrical Pathway Before and After 500% Elongation

[0166] A sample of a 25-mil diameter solder wire (44 Rosin core, commercially available from Kester Inc., Glenview, Ill.) was cut to a length of 18 cm. A 15-cm section in the center, equidistant from both ends, was coiled over a 1-mm wire form and the pitch adjusted to obtain a coil having a length of 3 cm. The wire, serving as a conductor, was heat sealed in a linear low density polyethylene (LLDPE) film (Flexol ER276037), serving as a support member, so as to expose the two wire ends for electrical contact, and to form a connector. Two tabs were then affixed to the two ends of the heat-sealed film so as to partly cover the linear ends of the wire just outside of the coiled ends of the wire. The resistance across the wire was measured using a multimeter and registered at 1.3 ohms. The two tabs were then tightly grasped between the thumb and forefinger of each hand and the connector comprising the LLDPE laminate and the coiled wire was stretched to elongate the 3-cm section between the tabs to a length of 15 cm.

During this process, the wire uncoiled and linearized. The resistance across the wire was measured again and was found to be unchanged at 1.3 ohms.

[0167] The embodiments described above and illustrated in the figures are presented by way of example only and are not intended as a limitation upon the concepts and principles of the present invention. As such, it will be appreciated by one having ordinary skill in the art that various changes in the elements and their configuration and arrangement are possible without departing from the spirit and scope of the present disclosure. Various features and aspects of the invention are set forth in the following claims.

1. (canceled)

2. A biomedical sensor system comprising:

a hub;

a sensor adapted to create a signal based on a physiological characteristic from a subject, the signal including at least one of an electromagnetic signal, an electrical signal, an acoustic signal, a mechanical signal, a thermal signal, and a chemical signal;

a connector coupled to the sensor, the connector adapted to be further coupled to the hub to provide a pathway between the hub and the sensor for the signal, the connector having a variable length.

3. (canceled)

4. The biomedical sensor system of claim **2**, wherein the sensor is a first sensor, the signal is a first signal, and the connector is a first connector, and further comprising:

a second sensor adapted to create a second signal based on a physiological characteristic from the subject, the second signal including at least one of an electromagnetic signal, an electrical signal, an acoustic signal, a mechanical signal, a thermal signal, and a chemical signal; and

a second connector coupled to the second sensor, the second connector adapted to be further coupled to the hub to provide a pathway between the hub and the second sensor for the second signal, the second connector having a variable length.

5. The biomedical sensor system of claim **4**, wherein the hub includes a transceiver adapted to

wirelessly transmit information to at least one of the first sensor, the second sensor, and downstream equipment;

wirelessly receive information from at least one of the first sensor, the second sensor, and downstream equipment; and

combinations thereof.

6. The biomedical sensor system of claim **2**, wherein the sensor includes an electrode.

7. (canceled)

8. (canceled)

9. The biomedical sensor system of claim **2**, wherein the hub includes a transceiver adapted to wirelessly transmit information to at least one of the sensor and downstream equipment, wirelessly receive information from at least one of the sensor and downstream equipment, and combinations thereof.

10. (canceled)

11. (canceled)

12. (canceled)

13. The biomedical sensor system of claim **2**, wherein the sensor includes an electrode, wherein the electrode is one of a plurality of satellite electrodes, and wherein the hub includes an electrode, such that the biomedical sensor system is adapted to produce a multi-lead ECG.

14. The biomedical sensor system of claim **2**, wherein at least a portion of the connector is viscoelastic.

15. The biomedical sensor system of claim **2**, wherein the connector includes a conductor coupled to a support member.

16. The biomedical sensor system of claim **15**, wherein the support member is viscoelastic, and wherein the conductor includes at least one bend.

17. (canceled)

18. The biomedical sensor system of claim **2**, wherein at least a portion of the biomedical sensor system is radiotransparent.

19. The biomedical sensor system of claim **15**, wherein the conductor includes at least one of an electrically conductive material, a conductive thick film laminate, an optical fiber, and a spiral configuration.

20. (canceled)

21. (canceled)

22. The biomedical sensor system of claim **15**, wherein the conductor is embedded within the support member.

23. The biomedical sensor system of claim **15**, wherein the support member is a first support member and further comprising a second support member, and wherein the conductor is coupled between the first support member and the second support member.

24. The biomedical sensor system of claim **15**, wherein the support member defines an interior, and wherein the conductor is positioned within the interior of the support member.

25. (canceled)

26. The biomedical sensor system of claim **15**, wherein the support member includes at least one slit or weakened region.

27. (canceled)

28. The biomedical sensor system of claim **2**, wherein the connector is at least one of windable around a spool, retractable into and out of the hub, and including an accordion-style configuration.

29. (canceled)

30. (canceled)

31. The biomedical sensor system of claim **2**, wherein the connector is adapted to allow the electrode to move at least one of radially with respect to the hub and angularly with respect to the hub.

32. (canceled)

33. A method of applying a biomedical sensor system to a subject, the method comprising:

providing a biomedical sensor system comprising:

a hub,

a sensor, and

a variable-length connector positioned to couple the sensor and the hub, the connector adapted to provide a pathway between the hub and the sensor for at least one of an electromagnetic signal, an electrical signal, an acoustic signal, a mechanical signal, a thermal signal, and a chemical signal;

changing the length of the variable-length connector to provide an appropriate distance between the sensor and the hub; and

coupling the sensor to the subject.

34. (canceled)

35. (canceled)

36. The method of claim **33**, wherein changing the length of the variable-length connector includes changing the length of the variable-length connector a first time to provide a first distance between the sensor and the hub, and further comprising changing the length of the variable-length connector a second time to provide a second distance between the sensor and the hub.

37. The method of claim **36**, wherein changing the length of the variable-length connector includes lengthening the variable-length connector, and wherein the second distance is greater than the first distance.

38. (canceled)

39. (canceled)

* * * * *