# MEETRIX IP, LLC

"DEMONSTRATIVE EXHIBIT-NOT EVIDENCE"

DiNovoPrice

*ZOHO CORPORATION*

*AND*

*ZOHO CORPORATION PVT., LTD.*

*PETITIONERS*

*V.*

*MEETRIX IP, LLC,*

*PATENT OWNER*

IPR2023-00371, -00377, -00378, -00379, -00380, -00382

# U.S. Pat. No. 9,843,612
# IPR2023-00380, 382

**IPR2023-00380**

| Claims Challenged | 35 U.S.C. § | Basis/References |
|---|---|---|
| 10–18 | 103(a) | Drell, Knappe, Elliott, Hendricks, Doganata |

**IPR2023-00382**

| Claims Challenged | 35 U.S.C. § | Basis/References |
|---|---|---|
| 19–21, 25–27 | 103(a) | Knappe, Elliott, VPN Textbook, Hendricks |
| 22–24, 28, 29 | 103(a) | Knappe, Elliott, VPN Textbook, Hendricks, Drell |

IPR2023-00380 Paper 10 (Response) at 14, -00382 Paper 10 (Response) at 14

# Overview of the ’612 Patent IPR2023-00380, -00382

The Patents-in-Suit teach a system and method of achieving, multi-participant, audio/video conferencing, over the Internet, using secure connections and multicasting. Fig. 3 of the ‘612 patent provides a high-level graphical depiction.

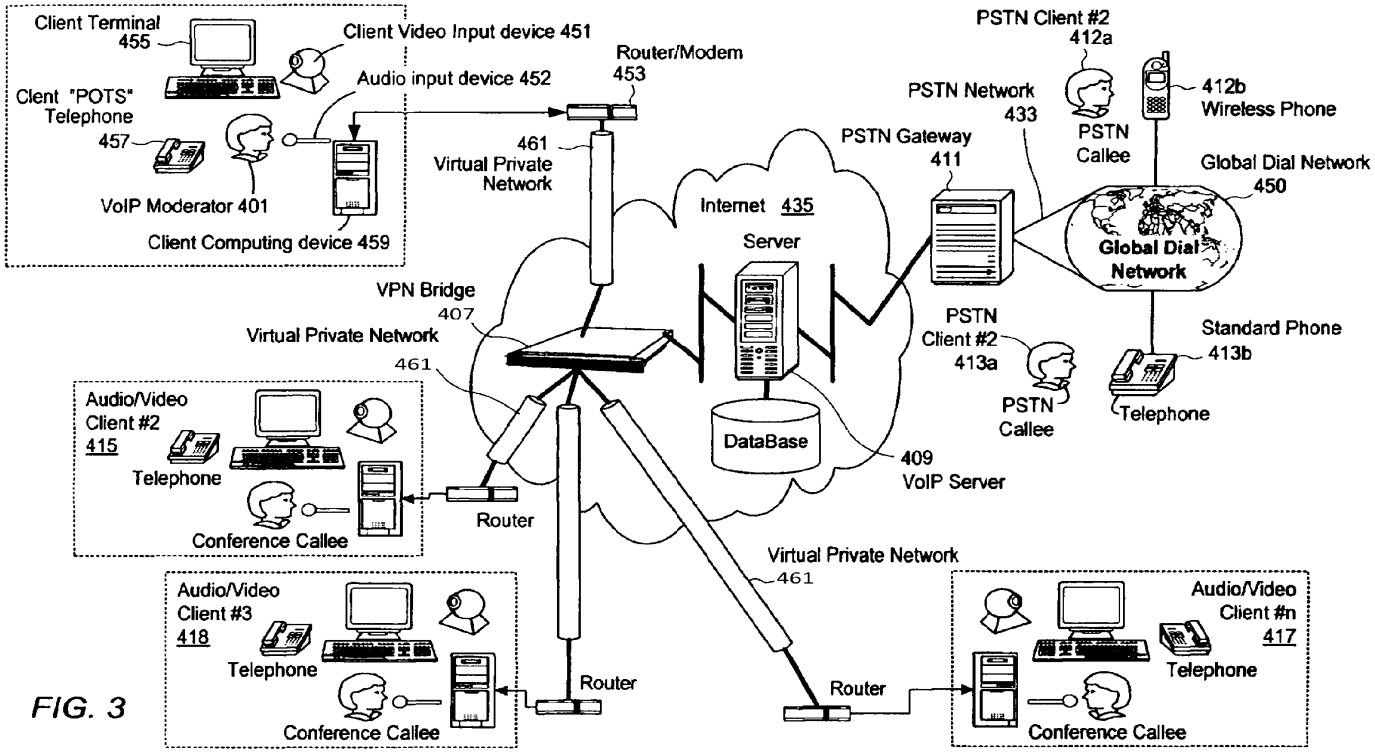


FIG. 3

IPR2023-00380 Paper 10 (Response) at 2

“DEMONSTRATIVE EXHIBIT-NOT EVIDENCE”

# Overview of the ’612 Patent IPR2023-00380, -00382

The ’612 Patent is a continuation of the ’997 Patent, with which it shares a specification and figures.

The method described in the claims involves establishing a secure multi-participant conference call with full duplex audio capabilities. The process begins by initiating a dial-in connection with a local moderator client in response to input from a Public Switched Telephone Network (PSTN) client.

Audio data is received from both the PSTN client through a PSTN gateway and a remote client via a Virtual Private Network (VPN) tunnel at the local moderator client.

The local moderator client then transmits a third audio data, first video data, and collaboration data to the remote client through the VPN tunnel, while also transmitting audio data to the PSTN client through the PSTN gateway.

IPR2023-00380 Paper 10 (Response) at 2-3

“DEMONSTRATIVE EXHIBIT-NOT EVIDENCE”

# Overview of the ’612 Patent IPR2023-00380, -00382

The MCU is an example of a network node. When one organizer is connected to a plurality of online meeting attendees, the organizer’s desktop image and audio and video must be sent to each of the attendees.

If the organizer sends a separate copy to each attendee, his internet connection will become overburdened and response time will drop to a crawl.

The Meetrix inventors devised an online meeting system wherein the organizer only sent a single copy of his data to a remote Meetrix (network node), inside the internet infrastructure where high bandwidth channels were available, which then made separate a copy of the organizer data to send to each attendee. This avoided the bottleneck in the organizer’s internet connection.

IPR2023-00380 Paper 10 (Response) at 4

“DEMONSTRATIVE EXHIBIT-NOT EVIDENCE”

# Claim Constructions

A POSITA would understand, in light of the ’612 Patent and applying the *Phillips* standard, the following constructions:

“Virtual Private Network”: (VPN) a private network of securely connected appliances configured within a public network

“VPN tunnel”: a connection between two devices that permits encapsulating a first packet from one protocol in a second packet from a different protocol.

“audio-video data stream” / “audio-video audio and video data transmitted together in stream” audio and video transmitted together in a continuous fashion.

“mixed audio-video data” a mix of both audio and video data

“first mixer” a mixer that is not the second or third mixers

“second mixer” a mixer that is not the first or third mixer

IPR2023-00380 Paper 10 (Response) at 13

“DEMONSTRATIVE EXHIBIT-NOT EVIDENCE”

# Claim Constructions

"third mixer" a mixer that is not the first or second mixers

"first mixed data stream" data stream that contains a mix of both the PSTN client audio data and moderator audio-video data but not remote client audio-video data

"second mixed data stream" data stream that contains a mix of both the remote client audio-video data and moderator audio-video data but not PSTN client audio data

"third mixed data stream" data stream that contains a mix of both the remote client audio-video data and PSTN client audio data but not moderator audio-video data

"first mixed audio data" data that contains a mix of both the PSTN client audio data and moderator audio data but not remote client audio data

IPR2023-00380 Paper 10 (Response) at 13

"DEMONSTRATIVE EXHIBIT-NOT EVIDENCE"

# Claim Constructions

"second mixed audio data" data that contains a mix of both the moderator audio data and remote client audio data but not PSTN audio data

"third mixed audio data" data that contains a mix of both the PSTN audio data and remote client audio data but not moderator audio data

IPR2023-00380 Paper 10 (Response) at 13
"DEMONSTRATIVE EXHIBIT-NOT EVIDENCE"

# Overview: Elliott

Elliott is directed to a call center where there is a fixed moderator. It teaches the use of PSTN for talking point to point, plus sharing a computer program separately so that the call participants can view a website. Call center 22 may consist of several agent workstations 24. In the preferred embodiment, an agent workstation comprises an agent computer 24 (regardless of platform, processor-type or operating System) which runs a Web browser and ***customer service application Software***. ***The agent workstation will typically also include an agent telephone 26 (e.g., a traditional analog telephone).***

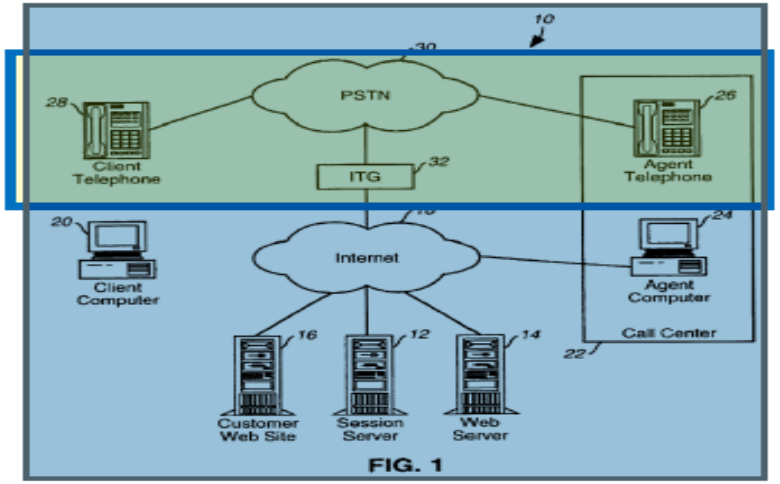


IPR2023-00380 Paper 10 (Response) at 5

"DEMONSTRATIVE EXHIBIT-NOT EVIDENCE"

# Overview: Elliott

Elliott is addressed to a scenario in which a first party, an agent in a call-center, manages interactions with two or more remote parties via a computer program, **establishing separate sessions for each party**. **This allows and indeed requires independent communication**.

In essence, the communication between the call center and two remote parties operates independently, ensuring individual interactions. Moreover, when it comes to collaboration, the scope is confined to sharing and browsing multimedia solely between the call center and each respective remote party, maintaining a distinct and separate collaborative environment for each party. In the simplest of terms, Elliot embodies a scenario where participants communicate over a traditional PSTN phone line (*e.g.* circuit-switched network), but separately utilize an independent data network (*e.g.* packet-switched network) to "share" website data.

IPR2023-00380 Paper 10 (Response) at 5-6
"DEMONSTRATIVE EXHIBIT-NOT EVIDENCE"

# Overview: Drell

Drell discloses a method that involves facilitating a conference or video conferencing between a near conference endpoint and multiple remote endpoints via a network. The network can be internet or combination of two or more networks such as PSTN and the Internet. The near conference endpoint generates its own audio and video signals, while also receiving corresponding signals from the remote endpoints. To manage these signals, distinct processing trains are established for each remote endpoint, processing the received audio and video data. After processing, the audio and video signals from the remote endpoints are merged with the local signals of the near conference endpoint. The resulting combined audio and video signals are then transmitted back to all remote endpoints involved in the conference.

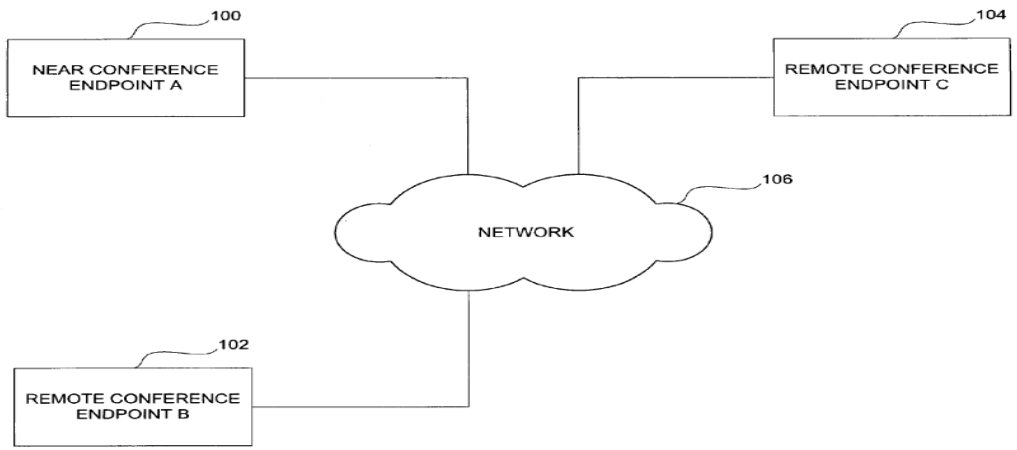


FIG. 1

IPR2023-00380 Paper 10 (Response) at 7-8

DEMONSTRATIVE EXHIBIT-NOT EVIDENCE"

# Overview: Knappe

Knappe seeks to solve a problem in the art related to audio quality on traditional conference calls. With traditional conference calls multiple speakers then to "step-on" each other "such that the resultant audio is incomprehensible." Exhibit 1006 at 1:49-55. Thus, Knappe is directed to "enhancing the intelligibility of a moderator during a multiparty communication session." *Id*. at 1:59-63. In other words, Knappe is directed to improving the quality of a moderator's audio communications. Knappe neither discloses nor suggests VPN tunneling or for that matter, any other secured form of communication.

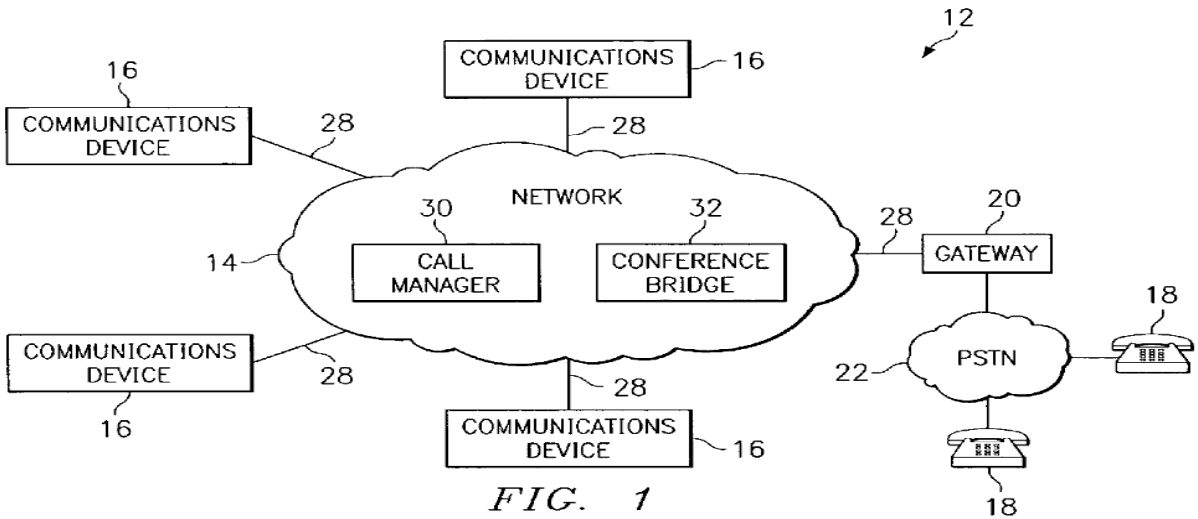


*FIG. 1*

# Overview: VPN Textbook

VPN Textbook (Exhibit 1010) is a general-purpose textbook describing the existence of and general implementation concepts relating to the implementation of VPNs.

IPR2023-00380 Paper 10 (Response) at 11

"DEMONSTRATIVE EXHIBIT-NOT EVIDENCE"

# CLAIMS 10-18 ARE NOT OBVIOUS OVER DRELL IN COMBINATION WITH KNAPPE, ELLIOTT, HENDRICKS, AND DOGANATA IPR2023-00380

- **THE PRIOR ART OF RECORD DOES NOT TEACH OR DISLOSE THE ELEMENTS OF THE INSTITUTED CLAIMS**

The independent claims refer to receiving and transmitting specific audio data for different recipients. For example, claim 10 recites:

> receiving first audio data at the local moderator client from the PSTN client through a PSTN gateway;
>
> receiving a second audio data at the local moderator client from a remote client through a Virtual Private Network (VPN) tunnel;
>
> transmitting third audio data, first video data, and first collaboration data from the local moderator client to the remote client through the first VPN tunnel; and
>
> transmitting fourth audio data from the local moderator client to the PSTN client through the PSTN gateway.

Exhibit 1001 (’612 Patent), claim 10.

IPR2023-00380 Paper 15 (Sur-Reply) at 3

# ELLIOTT DISCLOSES MODERATOR-TO-CLIENT ONLY IPR2023-00380

In Elliott, a first party, an agent in a call-center, manages interactions with two or more remote parties via a computer program, establishing separate sessions for each party. This allows independent communication.

Elliott simply discloses two independent calls with two independent remote parties connected to a call-center. The two remote parties are not connected to each other, directly or indirectly. This call-center configuration is specifically designed to allow the agent at the call-center to control any information shared with remote parties and would not be combined with the conferencing systems between remote parties of Knappe which allow the remote parties to freely exchange data.

IPR2023-00380 Paper 15 (Sur-Reply) at 5

"DEMONSTRATIVE EXHIBIT-NOT EVIDENCE"

# ELLIOTT DISCLOSES MODERATOR-TO-CLIENT ONLY IPR2023-00380

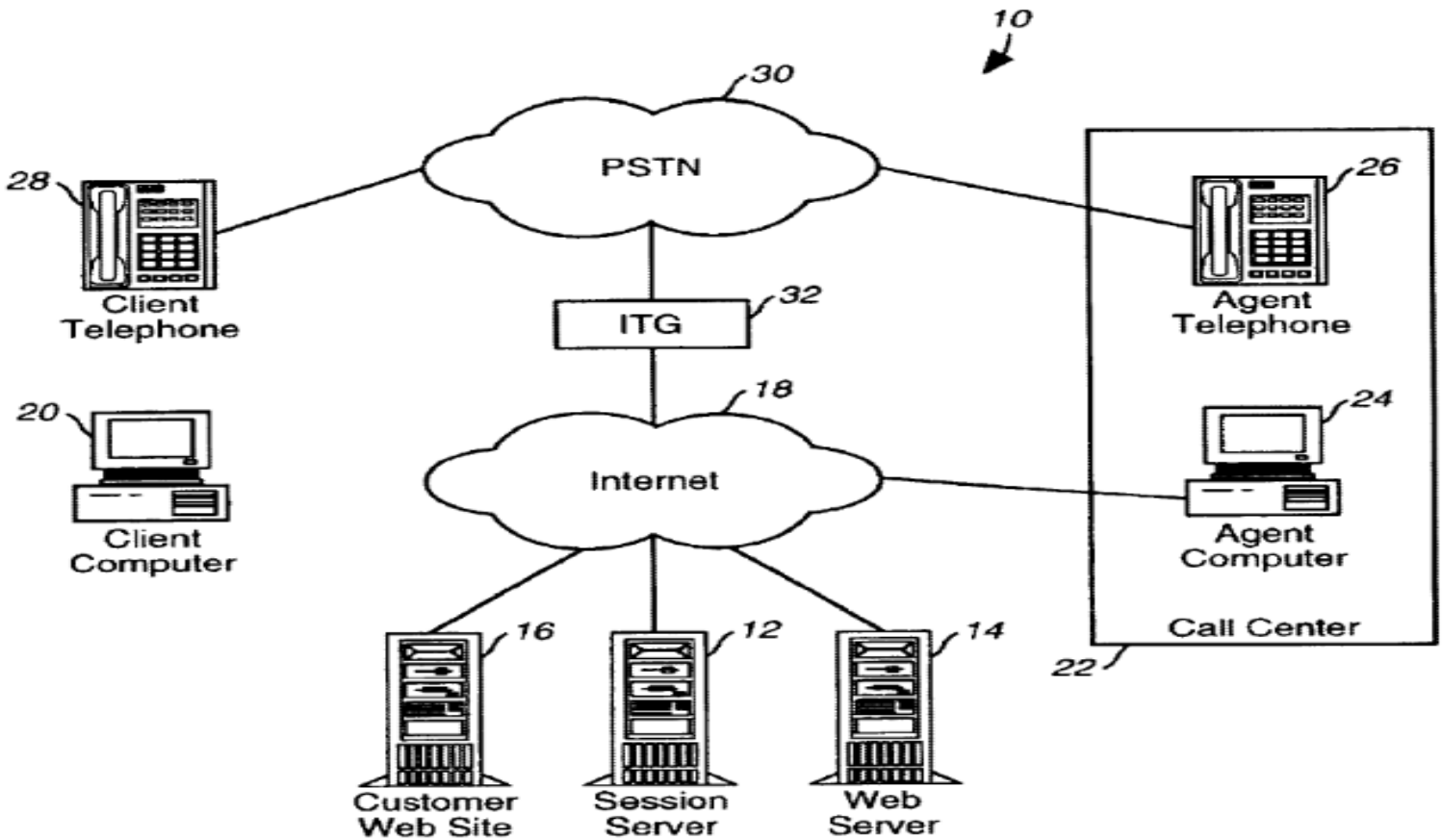


FIG. 1

IPR2023-00380 Paper 15 (Sur-Reply) at 5-6

"DEMONSTRATIVE EXHIBIT-NOT EVIDENCE"

# ELLIOTT DISCLOSES MODERATOR-TO-CLIENT ONLY IPR2023-00380

In summary, Elliott discloses how an agent/user can send website information to a remote party. Elliott is clear that "[w]hen an agent logs in …she sees who (e.g., clients and agents) is currently logged into each session." Exhibit 1007 (Elliott) at 7:49-52. "The present invention uses the session server 12 to conduct multiple 1:1, 1:n, n:1 and n:n sessions (referring to, for example, agents:clients)." Exhibit 1007 (Elliott) at 7:57-60.

"One aspect of the present invention is that it allows for independent communication with a number of remote parties. "For example, call center 22 may be in simultaneous communications with a plurality of client computers 20. Call center 22 can communicate independently with each of the client computers." Exhibit 1007 (Elliott) at 7:66-8:4.

IPR2023-00380 Paper 15 (Sur-Reply) at 6-7

"DEMONSTRATIVE EXHIBIT-NOT EVIDENCE"

# ELLIOT DOES NOT SHARE AUDIO DATA AS CLAIMED IPR2023-00380

To the extent Elliott discusses URL push and IP-based collaboration, it refers to sharing website information—not audio data. Elliott states:

The preferred embodiment of the present invention also enables control of URL push. A user decides which (if any) URL to push to a remote party. This feature of present invention also allows the user and the remote party to browse independently of each other. When the user decides to push the URL to the remote party, that URL is pushed and the remote party's browser goes to that URL site. But the remote party can then go elsewhere. The remote party can also disable the URL trigger, for example, by hitting the escape key or by closing the program that allows for collaboration. Exhibit 1007 (Elliott) at 2:14-25.

Given Elliott's teaching away of sharing audio data between remote parties, it would not be combined with Knappe or Drell which involve sharing audio and video between remote parties.

IPR2023-00380 Paper 15 (Sur-Reply) at 6-7

"DEMONSTRATIVE EXHIBIT-NOT EVIDENCE"

# PRIOR ART DOES NOT DISCLOSE THE "THROUGH A FIRST VIRTUAL PRIVATE NETWORK (VPN) TUNNEL" LIMITATION OF INDEPENDENT CLAIM 10 OF THE '612 PATENT

IPR2023-00380

Elliott teaches combining a traditional analog phone connection with an agent workstation. Elliott would not suggest to a person of ordinary skill in the art that VPN tunneling should or could be implemented to protect voice over the Elliott PSTN phone connection or access to a publicly-available URL on the Web. Exhibit 2001 (Dye Decl.) at ¶21. First, a VPN (a private network of securely connected appliances configured within a public network) cannot be implemented over PSTN. Exhibit 2001 (Dye Decl.) at ¶22. Second, there would be no motivation to protect a direct PSTN connection in the manner claimed. Exhibit 2001 (Dye Decl.) at ¶¶ 21-22.

IPR2023-00380 Paper 15 (Sur-Reply) at 8

"DEMONSTRATIVE EXHIBIT-NOT EVIDENCE"

# PRIOR ART DOES NOT DISCLOSE THE "THROUGH A FIRST VIRTUAL PRIVATE NETWORK (VPN) TUNNEL" LIMITATION OF INDEPENDENT CLAIM 10 OF THE '612 PATENT IPR2023-00380

Elliott enables multimedia collaboration by allowing a first party, an agent in a call-center, to manage interactions with two or more remote parties via a computer program, establishing separate sessions for each party. This allows independent communication. Elliott is simply talking about two independent calls with two independent remote parties connected to a call-center. The two remote parties are not connected to each other, directly or indirectly. Because Elliott is directed to a different problem, the discussion in Elliott related to VPNs is never in relation to audio as claimed and certainly does not suggest VPN tunneling would be used in transmitting audio. Exhibit 2001 (Dye Decl.) at ¶23. Although Elliott mentions in passing a Virtual Private Network (VPN), its application can only be understood as directed to "network **18**," which is used to connect two computers over the Internet, and not audio data, mixed or otherwise. Exhibit 1007 (Elliott) at 4:6-19. In summary, a VPN tunnel as recited in claim 10 is not disclosed or suggested for transmission of audio data by the prior art of record.

IPR2023-00380 Paper 15 (Sur-Reply) at 8-9

"DEMONSTRATIVE EXHIBIT-NOT EVIDENCE"

# PRIOR ART DOES NOT DISCLOSE MULTIPLE DIFFERENTIATED AUDIO STREAMS AS REQUIRED BY INDEPENDENT CLAIMS 19 AND 25 OF THE '612 PATENT IPR2023-00382

The independent claims refer to mixing of different audio streams comprising different input signals for different recipients. For example, claim 19 recites:

> mixing the first audio data with the second audio data into a first mixed audio data;
>
> mixing the second audio data with the third audio data into a second mixed audio data;
>
> mixing the first audio data with the third audio data into a third mixed audio data;
>
> transmitting the first mixed audio data from the server to the PSTN client through the PSTN gateway;
>
> transmitting the second mixed audio data from the server to the first remote client through the first VPN tunnel;
>
> transmitting the third mixed audio data from the server to the second remote client through the second VPN tunnel.

Exhibit 1001 ('612 Patent), claim 19.

IPR2023-00382 Paper 10 (Response) at 15-16

# PRIOR ART DOES NOT TEACH "RECEIVING FIRST AUDIO DATA, FIRST VIDEO DATA, AND FIRST COLLABORATION DATA AT A SERVER FROM A FIRST REMOTE CLIENT" OF INDEP. CLAIM 19 OF THE '612 PATENT IPR2023-00382

"One aspect of the present invention is that it allows for independent communication with a number of remote parties. For example, call center 22 may be in simultaneous communications with a plurality of client computers 20. Call center 22 can communicate independently with each of the client computers." Exhibit 1007 (Elliott) at 7:66-8:4.

Given Elliott's teaching away of sharing audio data between remote parties, it would not be combined with Knappe which does involve sharing audio and video between remote parties.

IPR2023-00382 Paper 15 (Sur-Reply) at 8

"DEMONSTRATIVE EXHIBIT-NOT EVIDENCE"

# PRIOR ART DOES NOT DISCLOSE THE "THROUGH A FIRST VIRTUAL PRIVATE NETWORK (VPN) TUNNEL" LIMITATION OF CLAIM 19 OR THE "FIRST VPN TUNNEL" OR "SECOND VPN TUNNEL" OF CLAIM 23



Elliott enables multimedia collaboration by allowing a first party, an agent in a call-center, to manage interactions with two or more remote parties via a computer program, establishing separate sessions for each party. This allows independent communication. Elliott is simply talking about two independent calls with two independent remote parties connected to a call-center. The two remote parties are not connected to each other, directly or indirectly. Because Elliott is directed to a different problem, the discussion in Elliott related to VPNs is never in relation to mixed audio as claimed and certainly does not suggest VPN tunneling would be used in transmitting mixed audio. Exhibit 2001 (Dye Decl.) at ¶23. Although Elliott mentions in passing a Virtual Private Network (VPN), its application can only be understood as directed to "network **18**," which is used to connect two computers over the Internet, and not audio data, mixed or otherwise. Exhibit 1007 (Elliott) at 4:6-19.

IPR2023-00382 Paper 15 (Sur-Reply) at 10

"DEMONSTRATIVE EXHIBIT-NOT EVIDENCE"

# PRIOR ART DOES NOT DISCLOSE THE "THROUGH A FIRST VIRTUAL PRIVATE NETWORK (VPN) TUNNEL" LIMITATION OF CLAIM 19 OR THE "FIRST VPN TUNNEL" OR "SECOND VPN TUNNEL" OF CLAIM 23 IPR2023-00382

VPN Textbook does not cure the deficiencies of Elliott in teaching VPN tunneling related to transmission of mixed audio data. Petitioners merely assert that the VPN Textbook discloses "'more and more business-to-business traffic takes place over the Internet' and this type of communication is 'riddled with security issues.'" Paper 13 (Reply) at 15. A POSITA would not have found it obvious to combine Knappe's conferencing system with the alleged VPN and VPN tunneling technology disclosed in Elliott and the VPN Textbook as Petitioners argue because neither Elliott nor VPN Textbook disclose using a VPN Tunnel to protect mixed audio.

IPR2023-00382 Paper 15 (Sur-Reply) at 10-11

"DEMONSTRATIVE EXHIBIT-NOT EVIDENCE"

# U.S. Pat. No. 9,253,332
# IPR2023-00377

**IPR2023-00377**

| Claims Challenged | 35 U.S.C. § | Basis/References |
|---|---|---|
| 1, 2, 4, 5, 7 | 103(a) | Knappe, Elliott, VPN Textbook |
| 3, 6, 8–11 | 103(a) | Knappe, Elliott, VPN Textbook, Drell |
| 12 | 103(a) | Knappe, Elliott, VPN Textbook, Drell, Hoke |

IPR2023-00377 Paper 10 (Response) at 14

"DEMONSTRATIVE EXHIBIT-NOT EVIDENCE"

# PRIOR ART DOES NOT TEACH OR DISCLOSE THE DIFFERENTIATED MIXED AUDIO STREAMS OF THE INSTITUTED CLAIMS IPR2023-00377

With respect to claim 1, there is no step taught of: "mixing the first audio data from the PSTN client with the second audio data from the moderator into a first mixed audio data" and separate step of "mixing the second audio data from the moderator with the third audio data from the remote client into a second mixed audio data." '332 Patent, claim 1. Instead, there is a conference bridge black box that Petitioner contends without basis performs these steps. With respect to claim 8, there is no "first mixer…," "second mixer…," "first mixed audio data," and "second mixed audio data."

IPR2023-00377 Paper 15 (Sur-Reply) at 6-7

"DEMONSTRATIVE EXHIBIT-NOT EVIDENCE"

# PRIOR ART DOES NOT TEACH OR DISCLOSE THE DIFFERENTIATED MIXED AUDIO STREAMS OF THE INSTITUTED CLAIMS IPR2023-00377

Fig. 6 depicts such an arrangement. This claimed mixing arrangement is not shown in any prior art of record.

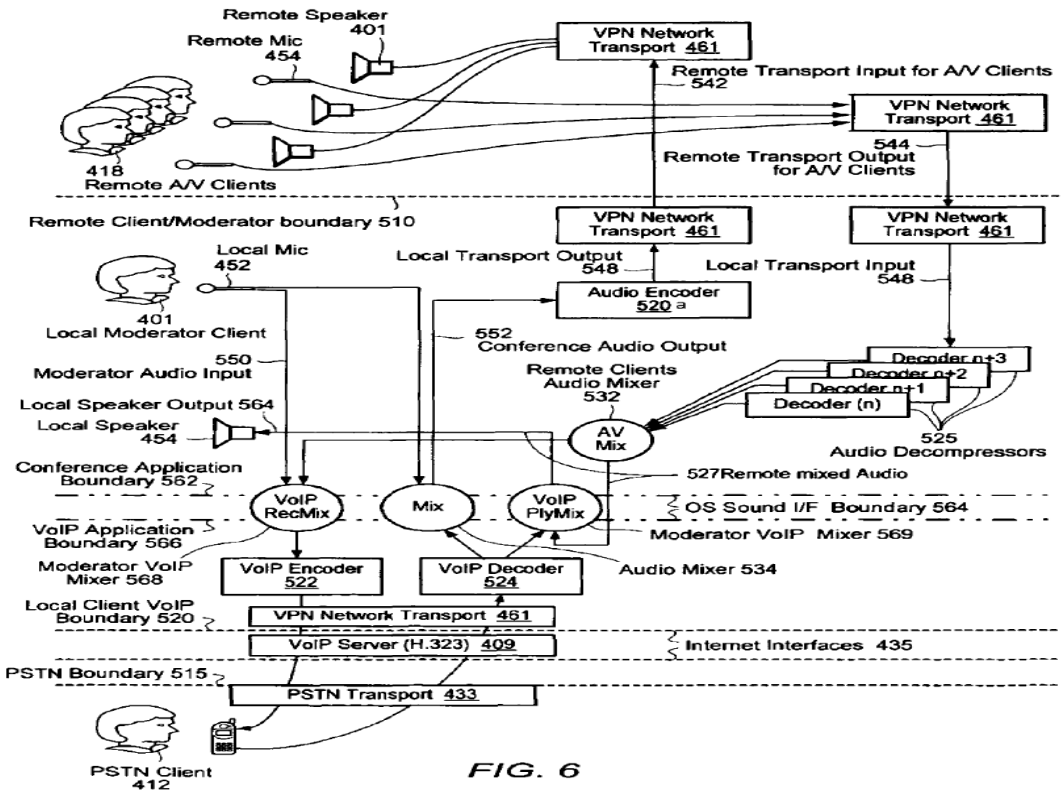


FIG. 6

IPR2023-00377 Paper 15 (Sur-Reply) at 4-5

"DEMONSTRATIVE EXHIBIT-NOT EVIDENCE"

# PRIOR ART DOES NOT TEACH OR DISCLOSE THE DIFFERENTIATED MIXED AUDIO STREAMS OF THE INSTITUTED CLAIMS IPR2023-00377

Drell, the only reference to make any comment about mixing, simply says a single mixer combines "in the broadest and most general sense." Drell, 5:8-25.

Petitioners "annotated" diagram of Knappe demonstrates the opposite of their point. *See* below excerpt.

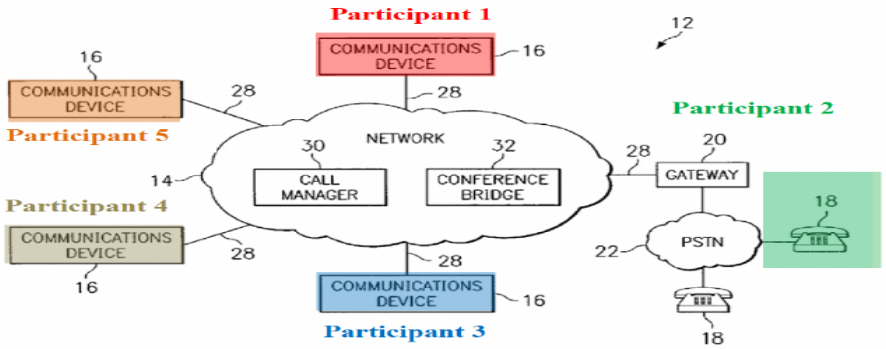


Ex_1006, FIG. 1 (annotated); Ex_1003 ¶176. Knappe teaches that the "input buffers receive and buffer packets of input audio streams from participants for processing by conference bridge 32," which would include audio data from participant 3 (the moderator). Ex_1006, 6:3-6; Ex_1003 ¶177. Thus, Knappe discloses receiving audio data from a moderator. Ex_1003 ¶¶176-179.

IPR2023-00377 Paper 15 (Sur-Reply) at 4-5

"DEMONSTRATIVE EXHIBIT-NOT EVIDENCE"

# CLAIMS 1-2, 4-5 AND 7 ARE NOT OBVIOUS OVER KNAPPE IN VIEW OF ELLIOTT AND THE VPN TEXTBOOK IPR2023-00377

Absent from Petitioners' prior art references is the concept of a VPN or VPN tunneling as claimed. Petitioners argue that "Elliot expressly discloses securing the transmission of audio data with VPN tunnels." Reply at 16. That is incorrect. The sole mention of "VPN" in Elliot is passing reference that "Network 18 *could also comprise other IP-based networks as well as other networks….which can be either a public or a carrier supported virtual private network."* Exhibit 1007 (Elliot) at 4:20-35 (emphasis added). It neither mentions nor teaches provisioning claimed types of mixed data over a VPN or VPN tunnel—just that a network *could* include an "intranet" or VPN.

Elliot teaches combining a traditional analog phone connection with an agent workstation. Elliot would not suggest to a person of ordinary skill in the art that VPN tunneling should or could be implemented to protect voice over the Elliott PSTN phone connection or access a publicly available URL on the Web. Exhibit 2001 (Dye Decl.) at ¶21. First, a VPN (a private network of securely connected appliances configured within a public network) cannot be implemented over PSTN. Exhibit 2001 (Dye Decl.) at ¶22. Second, there would be no motivation to protect a direct PSTN connection in the manner claimed. Exhibit 2001 (Dye Decl.) at ¶¶ 21-22.

IPR2023-00377 Paper 15 (Sur-Reply) at 7-8

# CLAIMS 1-2, 4-5 AND 7 ARE NOT OBVIOUS OVER KNAPPE IN VIEW OF ELLIOTT AND THE VPN TEXTBOOK IPR2023-00377

Elliot teaches a first party, an agent in a call-center, to manage interactions with two or more remote parties via a computer program, establishing separate sessions for each party. Petitioners seek to combine Elliot (EX_1007) with Knappe or Drell. As described above, Elliot teaches combining a traditional analog phone connection with an agent workstation. Neither of the two disparate parts of Elliot—a one-to-one POTS or PSTN phone connection or URL sharing between computers using conventional Internet protocols—would suggest to a person or ordinary skill in the art that a VPN tunnel should or could be implemented to protect voice over the Elliott POTS phone connection or access to a publicly-available URL on the Web. Exhibit 2001 (Dye Decl.) at ¶¶ 20-21.

IPR2023-00377 Paper 15 (Sur-Reply) at 10

# A POSITA WOULD NOT BE MOTIVATED TO COMBINE KNAPPE AND ELLIOTT IN THE MANNER CLAIMED IPR2023-00377

Elliot is simply talking about two independent calls with two independent remote parties connected to a call-center. The two remote parties are not connected to each other, directly or indirectly. Because Elliott is directed to a different problem, the discussion in Elliott related to VPNs is never in relation to mixed audio as claimed. Exhibit 2001 (Dye Decl.) at ¶23.

Knappe teaches a method of multipoint video conferencing between multiple users. Knappe presents a conference call configuration involving numerous participants (more than two) connected to a unified call, wherein audio and video data from these participants are combined and then relayed to all the participants/attendees whereas Elliot is just disclosing about two independent one-to-one calls, wherein data (audio) from one participant is transmitted to the call center only, it is not transmitted to any third user/participant. Due to this fundamental difference, Elliot lacks the motivation or capability to be integrated with Knappe's.

IPR2023-00377 Paper 15 (Sur-Reply) at 17-18

# PRIOR ART DOES NOT DISCLOSE "ENCODING THE FIRST MIXED AUDIO DATA INTO A FIRST COMPRESSED AUDIO DATA BEFORE TRANSMITTING THE FIRST MIXED AUDIO DATA TO THE REMOTE CLIENT" LIMITATION OF DEPENDENT CLAIM 6-IPR2023-00377

Petitioners argue that Drell teaches the use of codecs to encode data before transmission over the Internet. Reply at 22. More specifically, Petitioners contend that "[t]he only evidence in the record establishes that a POSITA would have been motivated to combine the teachings of Knappe and Drell to produce the obvious, beneficial, and predictable results of having a user act as moderator as in the Knappe system and implementing various aspects of Knappe's conferencing system as software and with an audio codec using a compression algorithm to reduce the amount of data being transmitted." Even Petitioner's statement of what is obvious to try is lengthy and complex. The evidence of record is that no one had done this before the claimed invention, and that Petitioner is using the claims as a template with the benefit of hindsight.

IPR2023-00377 Paper 15 (Sur-Reply) at 21

# PRIOR ART DOES NOT DISCLOSE "ENCODING THE FIRST MIXED AUDIO DATA INTO A FIRST COMPRESSED AUDIO DATA BEFORE TRANSMITTING THE FIRST MIXED AUDIO DATA TO THE REMOTE CLIENT" LIMITATION OF DEPENDENT CLAIM 6-IPR2023-00377

Knappe teaches the codec (coder/decoder) at the communication device. It does not provide any teaching regarding encoding of the ***claimed mixed audio data*** and transmitting the ***encoded mixed audio data*** to the remote device. Conversely, Drell employs a straightforward method blending the audio and video data from all participants, whether they are from near the conference endpoint or the remote endpoints. Due to this fundamental difference, a POSITA would not be motivated to combine Knappe with Drell's approach, and even if they were combined, the encoding of mixed audio data is not taught in the manner claimed.

IPR2023-00377 Paper 15 (Sur-Reply) at 21-22

# U.S. Pat. No. 9,094,525 IPR2023-00378, 379

**IPR2023-00378**

| Claims Challenged | 35 U.S.C. § | Basis/References |
|---|---|---|
| 1–4 | 103(a) | Drell, Knappe, Voois |
| 5–8 | 103(a) | Drell, Knappe, Voois, Elliott, VPN Textbook |
| 1–4 | 103(a) | Drell, Knappe |
| 5–8 | 103(a) | Drell, Knappe, Elliott, VPN Textbook |

**IPR2023-00379**

| Claims Challenged | 35 U.S.C. § | Basis/References |
|---|---|---|
| 9–20 | 103(a) | Drell, Knappe, Elliott |

IPR2023-00378 Paper 10 (Response) at 14, -00379 Paper 10 (Response) at 14

# Overview: Voois

Voois (Exhibit 1036) discloses videoconferencing through which a conference call is initiated to other remote devices and controlled. Audio and video data generated locally at the initiator device is mixed and encoded with the received audio and video data from the remote conferencing devices.

IPR2023-00378 Paper 16 (Sur-Reply) at 10-11

"DEMONSTRATIVE EXHIBIT-NOT EVIDENCE"

# NONE OF KNAPPE, DRELL AND VOOIS DISCLOSE THE "A SECOND TRANSPORT OUTPUT THAT TRANSMITS A MIXED AUDIO DATA STREAM, CORRESPONDING TO THE SECOND MIXED DATA STREAM, TO THE PSTN CLIENT." LIMITATION OF INDEPENDENT CLAIM 1 IPR2023-00378

Drell discloses one audio mixing module 308 and video switching/continuous presence module 306 which are present in the MP conference application where audio and video data from the processing trains from the remote conference endpoints 102 and 104 are extracted, decoded, and mixed respectively using audio mixing module 308 and video switching/continuous presence module 306 and sent to the respective remote conference endpoints.

IPR2023-00378 Paper 10 (Response) at 18

# DRELL AND KNAPPE DO NOT RENDER OBVIOUS THE "VOIP DECODER THAT RECEIVES IP PACKETS" LIMITATION OF CLAIM 3 IPR2023-00378

There is a fundamental difference between VoIP decoding and audio codecs. Petitioners attempt to conflate the two by suggesting that Drell teaches that "audio codec 408 receives an audio data stream and decodes in accordance with a standard or proprietary audio compression algorithm." Reply at 8. But use of an audio codec is entirely different than a VoIP decoder that receives IP packets. Moreover, Drell is completely devoid of any mention of VoIP, much less decoding same.

Audio codecs decode audio data in encoded format (compressed format). The input to an audio codec would be an encoded/compressed audio and not IP packets. Because the claim requires decoding IP packets, audio codecs cannot be attributed the function of decoding IP packets as IP (internet protocol).

With regard to Knappe, a POSITA would understand use of a gateway as performing the functions of *merely converting* an analog signal to a digital signal, VOIP and other protocols. Exhibit 2001 (Dye Decl.) at ¶25 (emphasis added). Thus, a POSITA would not be motivated to combine Drell and Knappe as neither teach a "VoIP decoder that receives IP Packets" as taught by the '525 Patent.

IPR2023-00378 Paper 16 (Sur-Reply) at 6-7

# U.S. Pat. No. 8,339,997
# IPR2023-00371

**IPR2023-00371**

| Claims Challenged | 35 U.S.C. § | Basis/References |
|---|---|---|
| 1, 3–7 | 103 | Knappe, Elliott, VPN Textbook, de Moraes |
| 2, 8–10 | 103 | Knappe, Elliott, VPN Textbook, de Moraes, Shepherd |

IPR2023-00371 Paper 10 (Response) at 13

"DEMONSTRATIVE EXHIBIT-NOT EVIDENCE"

# Overview: de Moraes

De Moraes (Exhibit 1022) discloses a very simple method of conducting an audio and image sharing using multicast addressing defined in RFC 1112. But several key features, including the nature of any message and its contents, are not disclosed.

De Moraes' discussion lacks analysis of the Public Switched Telephone Network (PSTN) or PSTN telephones, thereby omitting crucial information essential for understanding the transmission of multicast data within a hybrid network incorporating PSTN infrastructure. Specifically, De Moraes fails to address the inclusion of PSTN telephones capable of facilitating the transfer of multicast group address.

IPR2023-00371 Paper 10 (Response) at 17, 25

# Overview: Shepherd

Shepherd (Ex. 1034) focuses on the delivery and reception of multicast content across unicast networks, addressing the challenge of enabling destination devices in a computer network to receive content delivered as multicast packets.

In this system, a destination device intending to join a multicast group associated with specific content sends a multicast join message to a local router. If the attempt to join the multicast group fails due to non-multicast-enabled routes, the destination device can send a unicast request message marked for interception by intermediate network devices like multicast-enabled routers.

This message contains essential information, including the group address, source device address, and delivery mode indication. The multicast-enabled router intercepts the unicast request, processes it, and delivers the multicast packets as unicast packets to the requesting device.

IPR2023-00371 Paper 10 (Response) at 25-26

# Overview: Shepherd

Shepherd's relevance to the realm of videoconferencing or conferencing is notably absent, as it solely focuses on the transmission of multicast packets within a unicast network. Moreover, it fails to address the intricate process of handling data from PSTN telephones, which operate independently of the internet.

This significant gap in Shepherd's scope underscores its lack of synergy with Knappe. The absence of any substantial connection to the videoconferencing domain, coupled with its disregard for essential aspects like PSTN data handling, diminishes Shepherd's applicability and motivation to be integrated with Knappe's framework.

# THE PRIOR ART DOES NOT DISCLOSE THE "SENDING A FIRST MESSAGE TO EACH OF A PLURALITY OF MULTICAST APPLIANCES OVER THE INTERNET" LIMITATION OF INDEPENDENT CLAIM 1 IPR2023-00371

Petitioners implicitly acknowledge that neither Knappe nor De Moraes disclose this element. Reply at 5 ("De Moraes teaches [] that the communication devices 16 of Knappe, like the 'MBONE routers,' ***could use*** the well-known IP multicast addressing techniques taught by the RFC 1112 standard.").

Petitioners thus argue that yet another reference on top of its combination, not part of the claimed combination (the RFC 1112 standard), could be applied using the claim as a template to a device that is neither taught nor suggested by De Moraes. Petitioners then proceed to craft their own theoretical prior art system, cavalierly applying the claimed technology to a reference-unspecified component "like the 'MBONE routers.'" *Id*.

Knappe discloses identification of individual participants using a called number or other unspecified criteria. Exhibit 1006 at 5:27-29. De Moraes does not disclose the nature of any message or its contents as claimed. '997 Patent, 4:20-36.

IPR2023-00371 Paper 15 (Sur-Reply) at 4-5

# KNAPPE DOES NOT DISCLOSE THE "TELEPHONE PARTICIPANT PROVIDING CONFERENCE ID INFORMATION;" LIMITATION OF INDEPENDENT CLAIM 1 IPR2023-00371

Tacitly acknowledging that "***conference ID*** information" is absent from Elliott, Petitioners argue that "conference ID information" can be satisfied by providing information about a sequence of point-to-point communications.

That is inconsistent with the plain and ordinary meaning of "conference ID information," which contemplates a conference ID, or identifier.

Petitioners cannot direct the Board's attention to this in Knappe, but only IDs for "specific one-to-one sessions." Reply at 10.

IPR2023-00371 Paper 15 (Sur-Reply) at 7-8

# KNAPPE DOES NOT DISCLOSE THE "AUTHENTICATING THE TELEPHONE PARTICIPANT;" LIMITATION OF INDEPENDENT CLAIM 1 IPR2023-00371

As set forth in the '997 Patent, claim 1, a telephone participant "provides conference ID information" and then in accordance with this element, that party is authenticated, to maintain the integrity of the conference. '997 Patent, 6:18-20 ("A virtual private network bridge 407 is used to connect local and remote clients together within a secure private network.") The VPN bridge is used to authenticate clients. *Id.* at 6:58-59.

The telephone number does not meet the authentication step—otherwise there would be no authentication step disclosed in the specification or claim.

IPR2023-00371 Paper 15 (Sur-Reply) at 9-10

# NEITHER KNAPPE NOR SHEPHERD NOR DE MORAES DISCLOSE "ONE OR MORE OF THE APPLIANCES DETERMINING THE MULTICAST DATA FROM THE UNICAST PACKET" OF DEPENDENT CLAIM 2
IPR2023-00371

Neither De Moraes nor Shepherd teach the determination of multicast data from unicast data performed by communication devices at the user end. To the extent performed in their disparate systems, any determination of multicast data is performed by routers positioned between end user devices or communication devices (16).

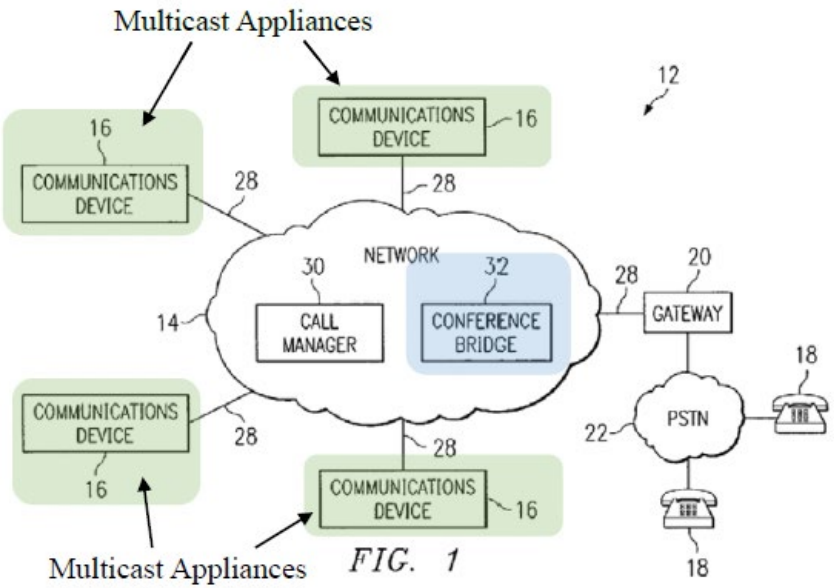

FIG. 1

IPR2023-00371 Paper 15 (Sur-Reply) at 14, Paper 1 (Petition) at 39

"DEMONSTRATIVE EXHIBIT-NOT EVIDENCE"

# MEETRIX IP, LLC

"DEMONSTRATIVE EXHIBIT -NOT EVIDENCE"