11-07-02 A

JC970 U.S. PTO 11/06/02

PTO/SB/05 (03-01)
Approved for use through 10/31/2002 OMB 0651-0032
U S Patent and Trademark Office; U S DEPARTMENT OF COMMERCE

Please type a plus sign (+) inside this box → [+]

Under the Paperwork Reduction Act of 1995, no persons are required to respond to a collection of information unless it displays a valid OMB control number

UTILITY PATENT APPLICATION TRANSMITTAL

(Only for new nonprovisional applications under 37 CFR 1.53(b))

Attorney Docket No.	9226
First Inventor	Gurantz
Title	Signal Selector and Combiner for Broadband Content Distribution
Express Mail Label No.	EU426746303US

10/289011 11/06/02

APPLICATION ELEMENTS

See MPEP chapter 600 concerning utility patent application contents

ADDRESS TO: Assistant Commissioner for Patents
Box Patent Application
Washington, DC 20231

1. [X] Fee Transmittal Form (e g , PTO/SB/17) *(Submit an original and a duplicate for fee processing)*
2. [X] Applicant claims small entity status See 37 CFR 1 27
3. [X] Specification [Total Pages 23] *(preferred arrangement set forth below)*
   - Descriptive title of the invention
   - Cross Reference to Related Applications
   - Statement Regarding Fed sponsored R & D
   - Reference to sequence listing, a table, or a computer program listing appendix
   - Background of the Invention
   - Brief Summary of the Invention
   - Brief Description of the Drawings (*if filed*)
   - Detailed Description
   - Claim(s)
   - Abstract of the Disclosure
4. [X] Drawing(s) *(35 U S C 113)* [Total Sheets 17]
5. Oath or Declaration [Total Pages]
   a [ ] Newly executed (original or copy)
   b [ ] Copy from a prior application (37 CFR 1 63 (d)) *(for continuation/divisional with Box 18 completed)*
   i [ ] DELETION OF INVENTOR(S) Signed statement attached deleting inventor(s) named in the prior application, see 37 CFR 1 63(d)(2) and 1 33(b)
6. [ ] Application Data Sheet. See 37 CFR 1 76
7. [ ] CD-ROM or CD-R in duplicate, large table or Computer Program (*Appendix*)
8. Nucleotide and/or Amino Acid Sequence Submission (*if applicable, all necessary*)
   a. [ ] Computer Readable Form (CRF)
   b Specification Sequence Listing on:
      i [ ] CD-ROM or CD-R (2 copies); or
      ii [ ] paper
   c [ ] Statements verifying identity of above copies

ACCOMPANYING APPLICATION PARTS

9. [ ] Assignment Papers (cover sheet & document(s))
10. [ ] 37 CFR 3 73(b) Statement *(when there is an assignee)* [ ] Power of Attorney
11. [ ] English Translation Document (*if applicable*)
12. [ ] Information Disclosure Statement (IDS)/PTO-1449 [ ] Copies of IDS Citations
13. [ ] Preliminary Amendment
14. [X] Return Receipt Postcard (MPEP 503) *(Should be specifically itemized)*
15. [ ] Certified Copy of Priority Document(s) *(if foreign priority is claimed)*
16. [X] Nonpublication Request under 35 U S C 122 (b)(2)(B)(i) Applicant must attach form PTO/SB/35 or its equivalent.
17. [ ] Other.

18. If a CONTINUING APPLICATION, *check appropriate box, and supply the requisite information below and in a preliminary amendment, or in an Application Data Sheet under 37 CFR 1 76*

[ ] Continuation [ ] Divisional [ ] Continuation-in-part (CIP) of prior application No _____/_____

Prior application information *Examiner* _____ *Group Art Unit* _____

For CONTINUATION OR DIVISIONAL APPS only: The entire disclosure of the prior application, from which an oath or declaration is supplied under Box 5b, is considered a part of the disclosure of the accompanying continuation or divisional application and is hereby incorporated by reference. The incorporation can only be relied upon when a portion has been inadvertently omitted from the submitted application parts.

19. CORRESPONDENCE ADDRESS

[X] *Customer Number or Bar Code Label* 24244 *(Insert Customer No or Attach bar code label here)* or [ ] *Correspondence address below*

Name					
Address	24244				
City	PATENT TRADEMARK OFFICE	State		Zip Code	
Country		Telephone	858-229-6801	Fax	858-509-0184

Name (Print/Type)	Michael W. Landry	Registration No. (Attorney/Agent)	38,216
Signature	Michael W. Landry	Date	11/6/2002

Burden Hour Statement This form is estimated to take 0 2 hours to complete Time will vary depending upon the needs of the individual case Any comments on the amount of time you are required to complete this form should be sent to the Chief Information Officer, U S Patent and Trademark Office, Washington, DC 20231. DO NOT SEND FEES OR COMPLETED FORMS TO THIS ADDRESS SEND TO: Assistant Commissioner for Patents, Box Patent Application, Washington, DC 20231

[redacted]

PTO/SB/17 (11-01)
Approved for use through 10/31/2002 OMB 0651-0032
U S Patent and Trademark Office, U S DEPARTMENT OF COMMERCE
Under the Paperwork Reduction Act of 1995, no persons are required to respond to a collection of information unless it displays a valid OMB control number

FEE TRANSMITTAL for FY 2002

Patent fees are subject to annual revision

[x] Applicant claims small entity status See 37 CFR 1 27

TOTAL AMOUNT OF PAYMENT ($) 397

Complete if Known	
Application Number	
Filing Date	11/6/2002
First Named Inventor	Gurantz
Examiner Name	
Group Art Unit	
Attorney Docket No.	9226

METHOD OF PAYMENT *(check all that apply)*

[x] Check [ ] Credit card [ ] Money Order [ ] Other [ ] None

[x] Deposit Account

Deposit Account Number: 502165

Deposit Account Name: Michael W. Landry

The Commissioner is authorized to: *(check all that apply)*

[ ] Charge fee(s) indicated below [x] Credit any overpayments

[x] Charge any additional fee(s) during the pendency of this application

[ ] Charge fee(s) indicated below, **except for the filing fee** to the above-identified deposit account.

FEE CALCULATION

1. BASIC FILING FEE

Large Entity Fee Code	Large Entity Fee ($)	Small Entity Fee Code	Small Entity Fee ($)	Fee Description	Fee Paid
101	740	201	370	Utility filing fee	370
106	330	206	165	Design filing fee	
107	510	207	255	Plant filing fee	
108	740	208	370	Reissue filing fee	
114	160	214	80	Provisional filing fee	

SUBTOTAL (1) ($) 370

2. EXTRA CLAIM FEES FOR UTILITY AND REISSUE

		Extra Claims		Fee from below	Fee Paid
Total Claims	23	-20** =	3	x 9	= 27
Independent Claims	3	- 3** =	0	x	=
Multiple Dependent					=

Large Entity Fee Code	Large Entity Fee ($)	Small Entity Fee Code	Small Entity Fee ($)	Fee Description
103	18	203	9	Claims in excess of 20
102	84	202	42	Independent claims in excess of 3
104	280	204	140	Multiple dependent claim, if not paid
109	84	209	42	** Reissue independent claims over original patent
110	18	210	9	** Reissue claims in excess of 20 and over original patent

SUBTOTAL (2) ($) 27

***or number previously paid, if greater, For Reissues, see above*

FEE CALCULATION (continued)

3. ADDITIONAL FEES

Large Entity Fee Code	Large Entity Fee ($)	Small Entity Fee Code	Small Entity Fee ($)	Fee Description	Fee Paid
105	130	205	65	Surcharge - late filing fee or oath	
127	50	227	25	Surcharge - late provisional filing fee or cover sheet	
139	130	139	130	Non-English specification	
147	2,520	147	2,520	For filing a request for *ex parte* reexamination	
112	920*	112	920*	Requesting publication of SIR prior to Examiner action	
113	1,840*	113	1,840*	Requesting publication of SIR after Examiner action	
115	110	215	55	Extension for reply within first month	
116	400	216	200	Extension for reply within second month	
117	920	217	460	Extension for reply within third month	
118	1,440	218	720	Extension for reply within fourth month	
128	1,960	228	980	Extension for reply within fifth month	
119	320	219	160	Notice of Appeal	
120	320	220	160	Filing a brief in support of an appeal	
121	280	221	140	Request for oral hearing	
138	1,510	138	1,510	Petition to institute a public use proceeding	
140	110	240	55	Petition to revive - unavoidable	
141	1,280	241	640	Petition to revive - unintentional	
142	1,280	242	640	Utility issue fee (or reissue)	
143	460	243	230	Design issue fee	
144	620	244	310	Plant issue fee	
122	130	122	130	Petitions to the Commissioner	
123	50	123	50	Processing fee under 37 CFR 1 17(q)	
126	180	126	180	Submission of Information Disclosure Stmt	
581	40	581	40	Recording each patent assignment per property (times number of properties)	
146	740	246	370	Filing a submission after final rejection (37 CFR § 1.129(a))	
149	740	249	370	For each additional invention to be examined (37 CFR § 1 129(b))	
179	740	279	370	Request for Continued Examination (RCE)	
169	900	169	900	Request for expedited examination of a design application	

Other fee (specify) _____

*Reduced by Basic Filing Fee Paid **SUBTOTAL (3)** ($)

SUBMITTED BY				Complete *(if applicable)*	
Name (Print/Type)	Michael W. Landry	*Registration No (Attorney/Agent)*	38,216	*Telephone*	858-229-6801
Signature	Michael W. Landry			*Date*	11/6/2002

WARNING: Information on this form may become public. Credit card information should not be included on this form. Provide credit card information and authorization on PTO-2038.

Burden Hour Statement This form is estimated to take 0 2 hours to complete Time will vary depending upon the needs of the individual case Any comments on the amount of time you are required to complete this form should be sent to the Chief Information Officer, U.S. Patent and Trademark Office, Washington, DC 20231. DO NOT SEND FEES OR COMPLETED FORMS TO THIS ADDRESS. SEND TO: Assistant Commissioner for Patents, Washington, DC 20231.

PTO/SB/35 (11-00)
Approved for use through 10/31/2002 OMB 0651-0031
U S Patent and Trademark Office, U S DEPARTMENT OF COMMERCE
Under the Paperwork Reduction Act of 1995, no persons are required to respond to a collection of information unless it displays a valid OMB control number

NONPUBLICATION REQUEST UNDER 35 U.S.C. 122(b)(2)(B)(i)	First Named Inventor	Gurantz
	Title	Signal Selector and Combiner for Broadband Content Distribution
	Atty Docket Number	9226

I hereby certify that the invention disclosed in the attached application **has not and will not be** the subject of an application filed in another country, or under a multilateral agreement, that requires publication at eighteen months after filing.

I hereby request that the attached application not be published under 35 U.S.C. 122(b).

11/6/2002
Date

Signature

Michael W. Landry
Typed or printed name

This request must be signed in compliance with 37 CFR 1.33(b) and submitted with the application **upon filing.**

Applicant may rescind this nonpublication request at any time. If applicant rescinds a request that an application not be published under 35 U.S.C. 122(b), the application will be scheduled for publication at eighteen months from the earliest claimed filing date for which a benefit is claimed.

If applicant subsequently files an application directed to the invention disclosed in the attached application in another country, or under a multilateral international agreement, that requires publication of applications eighteen months after filing, the applicant **must** notify the United States Patent and Trademark Office of such filing within forty-five (45) days after the date of the filing of such foreign or international application. **Failure to do so will result in abandonment of this application (35 U.S.C. 122(b)(2)(B)(iii)).**

Burden Hour Statement This collection of information is required by 37 CFR 1.213(a) The information is used by the public to request that an application not be published under 35 U S C. 122(b) (and the PTO to process that request) Confidentiality is governed by 35 U S C 122 and 37 CFR 1 14 This form is estimated to take 6 minutes to complete This time will vary depending upon the needs of the individual case Any comments on the amount of time you are required to complete this form should be sent to the Chief Information Officer, U S Patent and Trademark Office, Washington, DC 20231 DO NOT SEND FEES OR COMPLETED FORMS TO THIS ADDRESS SEND TO. Assistant Commissioner for Patents, Washington, DC 20231

11-07-02 A

JC970 U.S. PTO 11/06/02

PTO/SB/05 (03-01)
Approved for use through 10/31/2002 OMB 0651-0032
U S Patent and Trademark Office; U S DEPARTMENT OF COMMERCE

Please type a plus sign (+) inside this box → [+]

Under the Paperwork Reduction Act of 1995, no persons are required to respond to a collection of information unless it displays a valid OMB control number

UTILITY PATENT APPLICATION TRANSMITTAL

(Only for new nonprovisional applications under 37 CFR 1.53(b))

Attorney Docket No.	9226
First Inventor	Gurantz
Title	Signal Selector and Combiner for Broadband Content Distribution
Express Mail Label No.	EU426746303US

10/289011 11/06/02

APPLICATION ELEMENTS

See MPEP chapter 600 concerning utility patent application contents

ADDRESS TO: Assistant Commissioner for Patents
Box Patent Application
Washington, DC 20231

1. [X] Fee Transmittal Form (e g , PTO/SB/17) *(Submit an original and a duplicate for fee processing)*
2. [X] Applicant claims small entity status See 37 CFR 1 27
3. [X] Specification [Total Pages 23] *(preferred arrangement set forth below)*
   - Descriptive title of the invention
   - Cross Reference to Related Applications
   - Statement Regarding Fed sponsored R & D
   - Reference to sequence listing, a table, or a computer program listing appendix
   - Background of the Invention
   - Brief Summary of the Invention
   - Brief Description of the Drawings (*if filed*)
   - Detailed Description
   - Claim(s)
   - Abstract of the Disclosure
4. [X] Drawing(s) *(35 U S C 113)* [Total Sheets 17]
5. Oath or Declaration [Total Pages]
   a [ ] Newly executed (original or copy)
   b [ ] Copy from a prior application (37 CFR 1 63 (d)) *(for continuation/divisional with Box 18 completed)*
   i [ ] DELETION OF INVENTOR(S) Signed statement attached deleting inventor(s) named in the prior application, see 37 CFR 1 63(d)(2) and 1 33(b)
6. [ ] Application Data Sheet. See 37 CFR 1 76
7. [ ] CD-ROM or CD-R in duplicate, large table or Computer Program (*Appendix*)
8. Nucleotide and/or Amino Acid Sequence Submission (*if applicable, all necessary*)
   a. [ ] Computer Readable Form (CRF)
   b Specification Sequence Listing on:
      i [ ] CD-ROM or CD-R (2 copies); or
      ii [ ] paper
   c [ ] Statements verifying identity of above copies

ACCOMPANYING APPLICATION PARTS

9. [ ] Assignment Papers (cover sheet & document(s))
10. [ ] 37 CFR 3 73(b) Statement *(when there is an assignee)* [ ] Power of Attorney
11. [ ] English Translation Document (*if applicable*)
12. [ ] Information Disclosure Statement (IDS)/PTO-1449 [ ] Copies of IDS Citations
13. [ ] Preliminary Amendment
14. [X] Return Receipt Postcard (MPEP 503) *(Should be specifically itemized)*
15. [ ] Certified Copy of Priority Document(s) *(if foreign priority is claimed)*
16. [X] Nonpublication Request under 35 U S C 122 (b)(2)(B)(i) Applicant must attach form PTO/SB/35 or its equivalent.
17. [ ] Other.

18. If a CONTINUING APPLICATION, *check appropriate box, and supply the requisite information below and in a preliminary amendment, or in an Application Data Sheet under 37 CFR 1 76*

[ ] Continuation [ ] Divisional [ ] Continuation-in-part (CIP) of prior application No _____/_____

Prior application information *Examiner* _____ *Group Art Unit* _____

For CONTINUATION OR DIVISIONAL APPS only: The entire disclosure of the prior application, from which an oath or declaration is supplied under Box 5b, is considered a part of the disclosure of the accompanying continuation or divisional application and is hereby incorporated by reference. The incorporation can only be relied upon when a portion has been inadvertently omitted from the submitted application parts.

19. CORRESPONDENCE ADDRESS

[X] *Customer Number or Bar Code Label* 24244 *(Insert Customer No or Attach bar code label here)* or [ ] *Correspondence address below*

Name					
Address	24244				
City	PATENT TRADEMARK OFFICE	State		Zip Code	
Country		Telephone	858-229-6801	Fax	858-509-0184

Name (Print/Type)	Michael W. Landry	Registration No. (Attorney/Agent)	38,216
Signature	Michael W. Landry	Date	11/6/2002

Burden Hour Statement This form is estimated to take 0 2 hours to complete Time will vary depending upon the needs of the individual case Any comments on the amount of time you are required to complete this form should be sent to the Chief Information Officer, U S Patent and Trademark Office, Washington, DC 20231. DO NOT SEND FEES OR COMPLETED FORMS TO THIS ADDRESS SEND TO: Assistant Commissioner for Patents, Box Patent Application, Washington, DC 20231

[redacted]

PTO/SB/17 (11-01)
Approved for use through 10/31/2002 OMB 0651-0032
U S Patent and Trademark Office, U S DEPARTMENT OF COMMERCE
Under the Paperwork Reduction Act of 1995, no persons are required to respond to a collection of information unless it displays a valid OMB control number

FEE TRANSMITTAL for FY 2002

Patent fees are subject to annual revision

[x] Applicant claims small entity status See 37 CFR 1 27

TOTAL AMOUNT OF PAYMENT ($) 397

Complete if Known	
Application Number	
Filing Date	11/6/2002
First Named Inventor	Gurantz
Examiner Name	
Group Art Unit	
Attorney Docket No.	9226

METHOD OF PAYMENT *(check all that apply)*

[x] Check [ ] Credit card [ ] Money Order [ ] Other [ ] None

[x] Deposit Account

Deposit Account Number: 502165

Deposit Account Name: Michael W. Landry

The Commissioner is authorized to: *(check all that apply)*

[ ] Charge fee(s) indicated below [x] Credit any overpayments

[x] Charge any additional fee(s) during the pendency of this application

[ ] Charge fee(s) indicated below, **except for the filing fee** to the above-identified deposit account.

FEE CALCULATION

1. BASIC FILING FEE

Large Entity Fee Code	Large Entity Fee ($)	Small Entity Fee Code	Small Entity Fee ($)	Fee Description	Fee Paid
101	740	201	370	Utility filing fee	370
106	330	206	165	Design filing fee	
107	510	207	255	Plant filing fee	
108	740	208	370	Reissue filing fee	
114	160	214	80	Provisional filing fee	

SUBTOTAL (1) ($) 370

2. EXTRA CLAIM FEES FOR UTILITY AND REISSUE

		Extra Claims		Fee from below	Fee Paid
Total Claims	23	-20** = 3	x	9	= 27
Independent Claims	3	- 3** = 0	x		=
Multiple Dependent					=

Large Entity Fee Code	Large Entity Fee ($)	Small Entity Fee Code	Small Entity Fee ($)	Fee Description
103	18	203	9	Claims in excess of 20
102	84	202	42	Independent claims in excess of 3
104	280	204	140	Multiple dependent claim, if not paid
109	84	209	42	** Reissue independent claims over original patent
110	18	210	9	** Reissue claims in excess of 20 and over original patent

SUBTOTAL (2) ($) 27

***or number previously paid, if greater, For Reissues, see above*

FEE CALCULATION (continued)

3. ADDITIONAL FEES

Large Entity Fee Code	Large Entity Fee ($)	Small Entity Fee Code	Small Entity Fee ($)	Fee Description	Fee Paid
105	130	205	65	Surcharge - late filing fee or oath	
127	50	227	25	Surcharge - late provisional filing fee or cover sheet	
139	130	139	130	Non-English specification	
147	2,520	147	2,520	For filing a request for *ex parte* reexamination	
112	920*	112	920*	Requesting publication of SIR prior to Examiner action	
113	1,840*	113	1,840*	Requesting publication of SIR after Examiner action	
115	110	215	55	Extension for reply within first month	
116	400	216	200	Extension for reply within second month	
117	920	217	460	Extension for reply within third month	
118	1,440	218	720	Extension for reply within fourth month	
128	1,960	228	980	Extension for reply within fifth month	
119	320	219	160	Notice of Appeal	
120	320	220	160	Filing a brief in support of an appeal	
121	280	221	140	Request for oral hearing	
138	1,510	138	1,510	Petition to institute a public use proceeding	
140	110	240	55	Petition to revive - unavoidable	
141	1,280	241	640	Petition to revive - unintentional	
142	1,280	242	640	Utility issue fee (or reissue)	
143	460	243	230	Design issue fee	
144	620	244	310	Plant issue fee	
122	130	122	130	Petitions to the Commissioner	
123	50	123	50	Processing fee under 37 CFR 1 17(q)	
126	180	126	180	Submission of Information Disclosure Stmt	
581	40	581	40	Recording each patent assignment per property (times number of properties)	
146	740	246	370	Filing a submission after final rejection (37 CFR § 1.129(a))	
149	740	249	370	For each additional invention to be examined (37 CFR § 1 129(b))	
179	740	279	370	Request for Continued Examination (RCE)	
169	900	169	900	Request for expedited examination of a design application	

Other fee (specify) _____

*Reduced by Basic Filing Fee Paid **SUBTOTAL (3)** ($)

SUBMITTED BY				Complete *(if applicable)*	
Name (Print/Type)	Michael W. Landry	*Registration No (Attorney/Agent)*	38,216	*Telephone*	858-229-6801
Signature	Michael W. Landry			*Date*	11/6/2002

WARNING: Information on this form may become public. Credit card information should not be included on this form. Provide credit card information and authorization on PTO-2038.

Burden Hour Statement This form is estimated to take 0 2 hours to complete Time will vary depending upon the needs of the individual case Any comments on the amount of time you are required to complete this form should be sent to the Chief Information Officer, U.S. Patent and Trademark Office, Washington, DC 20231. DO NOT SEND FEES OR COMPLETED FORMS TO THIS ADDRESS. SEND TO: Assistant Commissioner for Patents, Washington, DC 20231.

PTO/SB/35 (11-00)
Approved for use through 10/31/2002 OMB 0651-0031
U S Patent and Trademark Office, U S DEPARTMENT OF COMMERCE
Under the Paperwork Reduction Act of 1995, no persons are required to respond to a collection of information unless it displays a valid OMB control number

NONPUBLICATION REQUEST UNDER 35 U.S.C. 122(b)(2)(B)(i)	First Named Inventor	Gurantz
	Title	Signal Selector and Combiner for Broadband Content Distribution
	Atty Docket Number	9226

I hereby certify that the invention disclosed in the attached application **has not and will not be** the subject of an application filed in another country, or under a multilateral agreement, that requires publication at eighteen months after filing.

I hereby request that the attached application not be published under 35 U.S.C. 122(b).

11/6/2002
Date

Signature

Michael W. Landry
Typed or printed name

This request must be signed in compliance with 37 CFR 1.33(b) and submitted with the application **upon filing.**

Applicant may rescind this nonpublication request at any time. If applicant rescinds a request that an application not be published under 35 U.S.C. 122(b), the application will be scheduled for publication at eighteen months from the earliest claimed filing date for which a benefit is claimed.

If applicant subsequently files an application directed to the invention disclosed in the attached application in another country, or under a multilateral international agreement, that requires publication of applications eighteen months after filing, the applicant **must** notify the United States Patent and Trademark Office of such filing within forty-five (45) days after the date of the filing of such foreign or international application. **Failure to do so will result in abandonment of this application (35 U.S.C. 122(b)(2)(B)(iii)).**

Burden Hour Statement This collection of information is required by 37 CFR 1.213(a) The information is used by the public to request that an application not be published under 35 U S C. 122(b) (and the PTO to process that request) Confidentiality is governed by 35 U S C 122 and 37 CFR 1 14 This form is estimated to take 6 minutes to complete This time will vary depending upon the needs of the individual case Any comments on the amount of time you are required to complete this form should be sent to the Chief Information Officer, U S Patent and Trademark Office, Washington, DC 20231 DO NOT SEND FEES OR COMPLETED FORMS TO THIS ADDRESS SEND TO. Assistant Commissioner for Patents, Washington, DC 20231

Signal Selector and Combiner for Broadband Content Distribution

Inventors: Itzhak Gurantz, Ladd El Wardani, Michael Landry

Docket: 9226

RELATED APPLICATIONS

This application claims priority to U.S. provisional patent application No. 60/345,965 filed 11/07/2001 entitled "Signal Selector and Combiner for Broadband Content Distribution"; U.S. provisional patent application No. 60/333,722 filed 11/27/2001 entitled "Signal Selector and Combiner for Broadband Content Distribution"; and U.S. provisional patent application No. 60/358,817 filed 2/22/2002 entitled "Signal Selector and Combiner for Broadband Content Distribution", each of which is incorporated herein by reference.

BACKGROUND

Referring to Fig. 1, a satellite receiver outdoor unit (ODU) 110 typically comprises a dish antenna 150, one or more antenna feed horns 130, one or more low noise amplifier and block down converters (LNB) 140, and an optional multiport cross point switch 160. Dish 150 collects and focuses received signal power onto antenna feed horns 130 which couples the signal to LNBs 140. A single dish 150 may have multiple feed horns 130 wherein each feed receives a signal from a different satellite in orbit. An installation may have more than one dish, feed, and LNB assemblies. The cross point switch 160 allows connection of the outdoor unit 110 to more than one integrated receiver decoder (IRD) 180 located inside the building. IRDs are commonly called set top boxes (STBs) arising from their typical installed location on top of TV sets. The LNB 140 converts the signal transmitted by a satellite in Earth orbit, for example C band, Ku band, or another frequency band, to a lower intermediate frequency (IF) suitable for transmission through coax inside a building. For example, L band IF (950 to 1450 MHZ) with RG-6 or RG-11 coax cable is commonly used. The IRD 180 tunes one transponder channel, demodulates the IF signal from the LNB down to base band, provides channel selection, conditional access,

decodes the digital data to produce a video signal, and generates an RF output to drive a television.

A satellite outdoor unit may have as many as three or more LNBs each with two receiving polarizations. The received polarization is selected by sending a voltage or other control signal to the LNB. In this configuration there are six possible 500 MHz signals that may be selected by the multiport cross point switch to be routed to each IRD. The 500 MHz signal is typically comprised of 16 transponder signals of 24 MHz bandwidth each with a guard band in between each transponder signal. Other transponder bandwidths are used such as 36 MHz, 54 MHz with a single channel or shared by two TV signals, and 43 MHz.

A problem with the conventional approach to connecting an outdoor unit to IRDs is that multiple cables are required to be run from the outdoor unit: one cable for each room where an IRD is located. When a new IRD is added another cable must be installed. In an application using a media server, a central processor for all video signals, multiple cables are needed to route signals from the ODU to the server.

Figure 4 shows a representative spectrum of the signal output by an LNB. In a conventional satellite ODU this signal is routed through a cross point switch to one of the IRDs. Note that all transponder channels in the signal are from a single LNB and from the same polarization satellite signal. The cross point switch allows any of the cables connected from the ODU to the IRDs to be switched to any of the LNBs. A dedicated cable for each IRD is needed because in general each IRD is not using the same LNB and polarization at the same time. A server requires access to several LNB signals simultaneously, thus requiring several cables.

United States patent 6,134,419, incorporated herein by reference, by Williams assigned to Hughes Electronics, addresses part of the problem. The Williams patent recognizes that the bandwidth of the signal from each of the two polarizations is too broad to be transmitted over standard RG-6 or RG-59 cable, particularly when combined with the cable CATV signal. Williams addresses this problem using a transmodulator, by demodulating and remodulating to a different modulation scheme the RHCP and LHCP signals using a tuner, decoder, packetizer,

cable encoder, and up converter for each of 32 transponder channels. The transmodulator outputs a signal with a higher-level modulation scheme to reduce the bandwidth occupied by the satellite signals. In the example provided, the QPSK signals from the LNBs are transmodulated to 128-QAM, reducing the bandwidth from 1000 MHz to 192 MHz. At the set top box (STB) the 128 QAM signal is demodulated and processed to produce an NTSC analog video signal sent to a television set.

One problem with the Williams approach is the circuit complexity due to the 32 tuner paths required in the transmodulator. For an increase in the number of satellite signals, this problem becomes more pronounced. Williams discloses modulation using 128-QAM, which requires a higher signal to noise ratio (SNR) than QPSK and is it more susceptible to impairment from multipath present in a cable environment.

United States patent 5,959,592 incorporated herein by reference, by Petruzzelli addresses combining both the left hand circular polarized (LHCP) and right hand circular polarized (RHCP) signals into one signal that is transmitted from the ODU. In the disclosed band stacking approach, the output of two low noise amplifiers (LNAs), each 500 MHz wide, are frequency translated to different IF frequencies and summed into a signal with a bandwidth of more than 1000 MHz. In one example disclosed, the different IF bands are 950 to 1450 MHz and 1550 to 2050 MHz. The problem with this approach is that the resulting bandwidth is very wide and becomes impractical when the number of LNB signals increases because each LNB output requires 500 MHz of bandwidth on the cable.

Satellite systems are described generally in G.E. Lewis, "Communication Services via Satellite" Butterworth-Heinemann Ltd. 1992.

SUMMARY OF THE INVENTION

A channel selecting and combining solution is used in the outdoor unit where one or more transponder channels are selected from each LNB output. The transponder channel or channels needed from each LNB are selected by a filter. Each selected transponder signal may be

translated to a new channel frequency. The selected transponder channels are combined to form a composite signal. All of the selected, translated, and combined transponder channels are transmitted over a single cable to a gateway unit that extracts the channels to distribute to the IRDs. The gateway can frequency translate each transponder channel to its original frequency. Alternatively, the IRDs connect directly from the cable or through a splitter and tune the desired transponder channels. A channel translation mapping table is used to coordinate the channel assignment between the original channels and new channels. In another alternative embodiment, the gateway transmits the video information over a digital data network.

LNB outputs can be sampled by a broadband A/D converter and filtered with a digital filter to select a transponder channel. Alternatively, a tuner can select a transponder channel. The selecting process extracts from the wide band LNB output a narrow band transponder channel.

Each IRD communicates the channels it needs to receive, directly or indirectly, to the signal selector. This information is used to select the transponder channel to combine in the signal selector output signal, the ODU downlink. New IRD designs can incorporate a signaling channel that uses unoccupied regions of the frequency spectrum of the cable, or a wireless communication link, to communicate the channel information. To provide compatibility with existing IRDs, the channel information can be communicated by an IR or RF auxiliary channel to the gateway or outdoor unit.

Many newer homes have coaxial cable installed that runs to a central location. In the present invention a gateway is located at the central location that receives the combined signal from the outdoor unit and distributes the signals to the IRDs. An IRD requests a channel through an IR or RF signal communicated to the gateway. The RF communication can be in the cable connecting the IRD to the gateway or a wired or wireless signal.

The present invention requires only one cable wire to be routed from the outdoor unit to inside the building or to a gateway. Additional IRDs can be added without any installation effort needed on the outdoor unit. In certain configurations the invention eliminates the cross point switch.

The present invention can be used along with other signals transmitted on the distribution cable. The combined transponder signal can occupy a predetermined region of the frequency spectrum while another service, such as CATV can occupy a different region. Another example of shared use of the cable is along with a single or band stacked satellite signal. In this example, frequencies such as 950-1450 and 1550-2050 are used by a conventional satellite system, and frequencies outside and between these frequency bands are occupied with a combined transponder signal according to the present invention.

BRIEF DESCRIPTION OF THE DRAWINGS

Fig. 1 Shows a prior art configuration of a satellite TV installation.

Fig. 2 shows a satellite TV installation according to the present invention.

Fig. 3 shows a block diagram of a selector and combiner according to the present invention.

Fig. 4 Shows a diagram of the frequency spectrum of individual LNB output signals according to the prior art.

Fig. 5 shows a diagram of the frequency spectrum of individual LNB output signals and the frequency spectrum of the composite RF signal comprising selected transponder signals in accordance with the present invention.

Fig. 6 shows an embodiment of the present invention wherein the sampled data is distributed digitally to channel selector filters.

Fig. 7 shows an embodiment of the present invention wherein the selected channel data is distributed digitally to the up converters.

Fig. 8 shows an embodiment of the present invention wherein the each LNB has a dedicated selector and up converter.

Fig. 9 shows an embodiment of the present invention wherein tuners and up converter are used to select and combine transponder channels.

Fig. 10 shows an embodiment wherein selected channel are processed by an MPEG transport stream demultiplexer and combined as data packets for digital LAN transmission.

Fig. 11 shows a satellite TV installation according to the present invention providing compatibility with existing installed STBs and new STBs and using a server/gateway.

Fig. 12 shows details of an outdoor unit providing compatibility with new and existing STBs.

Fig. 13 shows the frequency spectrum of signals at various points in the signal processing.

Fig. 14 shows the frequency spectrum of signals in another embodiment of the invention using base band processing.

Fig. 15 shows the frequency spectrum of signals filtered and combined with excess bandwidth.

Fig. 16 shows the frequency spectrum of conventional LNB signals combined with selected transponder channels in accordance with the present invention.

Fig. 17 shows one example of a frequency translator and filter.

DETAILED DESCRIPTION OF THE INVENTION

Referring to Fig. 2, a satellite TV installation according to the present invention is shown. Signal selector 250, part of satellite outdoor unit 210, extracts the needed transponder channels from each of the LNB outputs and combines the channels into one composite signal transmitted on cable 220. Gateway 230 receives the signals and provides distribution to the IRDs located in the building. Controller 255 is responsible for communicating channel map, control, and status information with gateway 230 and IRDs 240. Controller 255 also tunes filters and local oscillators in the signal selector and maintains the channel map specifying the assigned frequency slots for transponder channels. Alternatively, the channel map can be maintained by gateway 230.

Gateway 230 can be a simple power splitter/summer allowing the IRDs to connect directly to the cable. Gateway 230 would be located inside the home in a convenient location that allows connection to the IRDs 240. Gateway 230 is designed to pass signaling from IRDs 240 to ODU 210 that contains the channel selection information.

Each LNB output signal is applied to a signal selector that extracts zero, one, or more transponder channels to be combined into a composite signal.

Refer to Fig. 3. In an embodiment of the present invention, a quadrature down converter is used to produce I and Q analog signals. The down converter is comprised of a local oscillator 382,

phase splitter 384 to produce an in-phase and quadrature-phase LO, two mixers 310, and two filters 320. The filters 320 reject the undesired mixing products. The I and Q signals are sampled by high-speed broadband A/D converters 330 to create I and Q digital samples. The samples are N bits wide, where N is selected to limit the degradation to the signal to an acceptable level. The entire 500 MHz band is digitized by this operation. All further digital processing is done using complex operations applied to the I and Q digital samples. The sample rate is 500 MHz or higher.

The resolution of the A/D converters is in the range of 4 to 12 bits. To sample and reproduce a QPSK signal 6 to 8 bits would be adequate. More bandwidth efficient modulation such as 8PSK would require more bits of resolution. The selection of resolution is based on considering power consumption, SNR, and cost.

A coherent LO generated by carrier tracking is not needed since the sampled data is not decoded in the ODU. An unknown carrier offset is present between the LO and the carrier of the received signal. A small additional carrier offset is introduced by the down conversion process but will be removed in the carrier recovery operation in the IRD. It is desirable that the LO carrier noise be low enough to be tracked out by the carrier loop in the IRD.

Digital filtering 340 is used to select one or more of the transponder output signals. The digital filter may operate by applying a band pass filter transfer function to the broadband signal to isolate a single transponder channel. The filter uses known digital architectures such as finite impulse response (FIR) or infinite impulse response (IIR). The filter is tuned by programming a set of filter coefficients to select a specific pass band. Frequency domain filter can also be employed using FFT or DFT architectures. Other filtering techniques include polyphase filter structure. These filtering techniques are well known in the digital signal processing field. References covering digital filtering include Thomas J. Cavicchi "Digital Signal Processing" John Wiley & Sons, 2000; Sanjit K. Mitra, "Digital Signal processing, a Computer Based Approach" McGraw-Hill, 2001; Proakis and Manolakis, "Introduction to Digital Signal Processing", Macmillan Publishing, 1988; DSP and applications, Analog Devices.

Referring again to Fig. 3, the selected transponder channel is then frequency translated to a new carrier frequency. The selected and frequency translated digital signal is converted to an analog signal using a D/A converter for the I and Q components. One approach is to convert the digitally filtered signal to the analog domain using a D/A converter 350, then using a quadrature modulator with mixers 360, phase splitter 388, LO 386, and summer 380. Alternatively, this can be done by a digital mixing operation where a rotating phasor is multiplied by the data samples to translate their frequency, then converting the frequency shifted digital signal to an analog signal with a D/A.

LO 386 is variable to allow the selected channel to be frequency translated to any of the channels available in the band. Alternatively, the LO can be fixed at different a frequency for each of the channel selectors.

Alternatively, a single transponder channel can be selected by translating the spectrum down in frequency to place the selected channel at base band then applying a low pass filter transfer function to isolate a single channel. The translation can be done by a digital mixing operation wherein the sample data is multiplied by a data sequence representing a carrier frequency. A post-mixing filter rejects the undesired mixing terms.

Fig. 14 shows the frequency spectrum of the signal as it is processed. The original spectrum 1 is frequency translated to locate the selected transponder channel at base band, as shown in spectrum 2. A low pass filter then passes one transponder channel and removes signal information from the other transponder channels, shown in spectrum 3. This signal is then converted to an analog signal, mixed to a new frequency, and summed with other channels in the analog domain.

One summer input is provided for each signal selectors. This is a broadband signal comprising up to 16 or 32 channels. Alternatively, a summer combines the analog I and Q signals from all the signal selectors.

Two basic approaches to combining are possible. One approach is to combine digitally filtered signals in the digital domain. This can be achieved with all filtered transponder channels to be combined presented at a sample rate equal to the composite output rate. The other approach is to combine the selected signals in the analog domain. This leads to two possible approaches to filtering. One is to implement filters with the same input and output sample rate. The other approach is to filter with an output sample rate that differs from the input sample rate.

An example of a digital combining embodiment, a 500 msps broadband sampling of the LNB output could be filtered to produce a 500 msps output stream representing one or more transponder channels. Each transponder channel may be frequency translated to the desired new carrier frequency, then filtered to produce a single transponder signal that can be combined with other similarly selected transponder channels.

Fig. 13 shows the frequency spectrum of a sample stream as it is processed. The original spectrum 1 is frequency translated to locate the selected transponder channel at the desired frequency, as shown in spectrum 2. A band pass filter then passes one transponder channel and removes signal information from the other transponders channels, shown in spectrum 3. This filtering operation selects one transponder. In this example transponder channel B is selected. The sample stream for the selected channel is added to the sample stream from other filtering sections, represented in spectrum 4, to produce a composite sample stream in spectrum 5. Other selected channels are represented by channels labeled X.

Fig. 17 shows a block diagram of the processing elements to perform these steps. Local oscillator (LO) 1710 feeds mixer 1720 and is then band pass filtered by filter. LO is variable to allow the selected channel to be frequency translated to any of the channels available in the band. Filter 1730 has a programmable pass band frequency, tuned by loading different filter coefficients. Summer 1740 adds the sample stream to other sample streams. Several transponder channels are selected, each requiring one input to an adder. One embodiment uses a two input adder for each filter channel to implement a pipeline adder. The time delay introduced by a pipeline adder does not present a problem to the system because the receivers are each demodulating one transponder and the relative time delay is not apparent.

The frequency translation can occur either before or after the filtering operation. An advantage to translating first followed by filtering is that the filter removes the unwanted mixing terms generated. In either case, a rotating phasor is multiplied by the data samples to translate their frequency.

An example of an analog-combining embodiment, the digital filters may have an output sample rate that differs from the input sample rate. This can be inherent in the filtering operation or result from a down sampling done after filtering. Down sampling after the selecting filter is possible because the single channel the bandwidth is narrower than the A/D output and fewer samples are needed to represent the signal.

The spectrum is placed at the desired RF frequency by choosing the LO frequency driving the up converters. One example would be 950 to 1450 MHz, a standard IF frequency for DBS systems. This frequency band is compatible with standard set top box (STB) hardware. Other IF frequencies could be used. Using this technique, standard STB hardware can receive the new composite signal and demodulate and decode the video and audio signals. Specific TV channels are located at new transponder frequencies. A mapping table allows the IRD/STB to tune to the correct transponder channel. The bandwidth of the spectrum can be 500 MHz for a 16-transponder system, 1000 MHz for a 32-transponder system, or other bandwidths according to the number of transponder channels present on the cable. If the system uses band stacking, the A/D converter can directly sample the 1000 MHz IF signal, with or without a frequency translation, or the two LNB polarizations can be separated into two 500 MHz signals each digitized with separate A/D converters.

Alternatively, the IF signal from the LNB can be directly band pass sampled by a single A/D converter. The IF signal can be frequency translated to a different IF frequency before band pass sampling. Band pass sampling requires a higher speed A/D converter than base band sampling, but only a single A/D.

[redacted]

One pair of A/D converters is provided for each LNB output. Alternatively, the LNB output can be band pass sampled using a single A/D converter. At a given point in time some LNB outputs may not be accessed by a user. If no transponder channel is selected from a particular LNB output, the A/D converters associated with that LNB output may be switched off to reduce power consumption and heat generation, or reallocated to process another LNB output.

The A/D digitizes the entire LNB output signal; therefore all transponder channels are available in the sampled data. More than one transponder channel may be selected from the A/D data to be combined in the composite signal. When all A/D are powered up any combination of transponder channels from any LNB output can be combined into the composite signal for distribution to the gateway and STBs.

Fig. 5 shows a frequency spectrum of the composite signal. Each of the available channels can be occupied with any transponder channel of any polarization from any LNB. One or more channels are used by each active IRD connected to the system. The number of transponder channels in the composite signal can be from as few as 2 to as many as 32, depending on the number of simultaneous channels needed in the system.

In general, the selecting and combining process will result in transponder channels located at different frequencies than where originally found. A translation table maps original channel locations on the selector input to new channel locations on the selector output. This map created and maintained by a controller located in the ODU or the gateway and is communicated to the IRDs or other devices in the network.

The channel selector performs a frequency selective filtering operation to select the desired transponder frequency. The transition band of this filter is steep, passing the selected transponder channel and rejecting adjacent transponder channels. The transition region available is derived from the guard band between channels. This can be as small a few Mega-Hertz. If the LNB carrier offset is large, a shift in the spectrum will result in the selecting filter cutting off part of the desired spectrum and passing part of an adjacent channel. For this reason a carrier offset estimate is desirable. Since all transponder channels from a given LNB will have approximately

the same offset, it is only necessary to monitor one transponder channel from each LNB to determine the offset for all channels. Any of several know techniques for estimating the carrier offset may be employed. One example is two use two filters each approximately half the transponder bandwidth. By measuring the ratio of power from each filter output, an estimate of the carrier offset can be determined. Once the carrier offset is estimated, the sampled signal can be multiplied by a rotating phasor value to digitally shift the spectrum back to the nominal position. Alternatively, this frequency offset correction can be done in the analog domain, or a combination of digital and analog approaches.

Another approach to addressing the unknown carrier offset in the LNB is to use a wider filter to select transponder channels, wherein the bandwidth of the filter passes the selected transponder and part of the adjacent spectrum. In this way, if the transponder signal is not centered in the filter bandwidth the band edges will not be attenuated by the filter roll off. This excess bandwidth will allow some energy from the neighboring transponder signals. A wider channel separation is needed on the combined signal, for example the selected transponders can be spaced twice the conventional spacing. This approach makes less efficient use of the cable spectrum but simplifies the hardware implementation by reducing the requirement of or eliminating the carrier offset correction. Additionally, a less steep filter roll off is possible.

Fig. 15 shows the signal spectrum as it is processed. Spectrum 1 is a representative original spectrum. Spectrum 2 shows the filter pass band characteristic, which is wider than one transponder channel. Spectrum 3 is the result of filtering one transponder channel. Spectrum 4 is a composite of several transponder channels. A region between the selected channels is unused. The exact shape of the unused spectrum will be dependent on the filter roll-off characteristics, but is not significant. The objective is to pass the selected transponder signal without distortion.

The approach of using a filter with excess bandwidth technique is also useful for implementing the invention using an analog approach. A filter with a stop band substantially wider than the transponder channel allow using filters with more gradual transition band, and is therefore

simpler to implement. The excess bandwidth can range from less than 5% to 100% wider than the transponder bandwidth.

Fig. 6 shows a variation of the present invention that uses a cross point switch or shared bus 640 to distribute data from the A/Ds to the channel selecting filters. The cross point switch, also called crossbar switch, allows any signal input to be passed to any output. It can take the form of a data selector or multiplexer. Implemented as a shared bus, data sinks receive signals from data source using a time-multiplexed bus. Either a cross point switch or a shared bus can be unidirectional or bi-directional. The cross point principle applies to digital signals and analog signals. LNB outputs are quadrature down converted 620 and sampled by dual A/D converters 630. The parallel data is routed through cross point switch 640 so that any filter has access to any A/D data. Filter/selector 650 selects the desired transponder channel that is then up converted by quadrature modulator 660. All selected channels are combined in summer 670.

Fig. 7 shows a variation where the cross point switch 740 is located after the selecting filter 720. In this configuration the selecting filter 720 may also include a down sampler to reduce the bus traffic bandwidth in the cross point switch 740. Down sampling is possible because after selecting a single desired channel the bandwidth is narrower and fewer samples are needed to represent the signal. One or more selecting filters 720 may be connected to the output of each A/D, each filter 720 selecting one transponder channel.

Fig. 8 shows a configuration wherein each LNB has a dedicated selecting filter and up converter. The selecting filter may digitally select multiple channels from the broadband A/D data to drive the up converter and DAC.

Fig. 9 shows another alternative where analog tuners 930 select desired transponder channels that are up converted by up converter 940. All signals are combined by summer 950 to drive the signal cable 970 from the ODU. A multiport switch 920 allows any tuner to connect to any LNB output. The number of signal selecting paths comprising tuner 930 and up converter 940 is selected based on the maximum number of simultaneous users. A multiple-tuner personal video recorder would use more than one signal. Controller 960 receives channel select information

either from the cable or a separate data channel such as infrared (IR) or wireless RF link or other source. Channel select information from the controller 960 programs the tuner 930 and up converter 940 LO. Channel select information can come to the controller over a wireless remote control signal or using signaling sent over the cable.

Up converters 940 can operate at a fixed LO frequency with one up converter 940 being assigned to each user connected on the cable. The various LO frequencies are unique. Alternatively, the down conversion process of each tuner 930 can be set to down convert directly to a predetermined IF frequency which is unique for each selected signal, thereby eliminating a separate up converter. A simplified IRD can be used with this approach wherein the IRD needs only tune to a single selectable IF frequency. The tuning range is narrower than a convention 500 MHz tuner and the channel selection is limited to as few as four choices compared to up to 16 or more in a convention IRD tuner.

Fig. 10 shows another alternative where signal selector 1010 selects a transponder channel. MPEG transport stream demultiplexer 1020 extracts a specific video program that is combined by data combiner 1030. Several MPEG streams are multiplexed as needed, and packets are formatted for transmission on a digital network. A digital LAN 1040 connects directly to the ODU. Channel information is communicated to the ODU through the LAN.

Fig. 11 shows another alternative used where new STBs are used with existing STBs. ODU 1110 supplies a signal to each of the connected cables according to the type of STB attached to the cable. Existing legacy STBs 1120 are supplied with an IF signal as in a conventional system, and the STBs 1120 will tune to a single transponder channel. New STBs 1140 will be supplied with a composite signal according to the present invention comprising all the transponder channels that are selected; the new STB 1140 will tune and decode the requested channel.

A new STB 1140 can be installed in place of an existing STB 1130 by simply connecting the new STB 1140 to the cable in place of the existing STB 1130. More than one new STB 1140 can be installed by using a signal splitter 1150 to provide a signal to multiple STBs. New STBs use a signaling system for selecting transponder channels that passes through the splitter to the

ODU. Existing STBs will each have a dedicated connection to the ODU, as provided in the original installation. This is required because existing STBs use voltages or other control means to select LNB outputs that do not support multiple STBs on a single cable.

Also in Fig. 11, server/gateway 1160 receives the composite transponder signal, decodes specific programs, and distributes the program information in packetized MPEG over a digital local area network (LAN) 1170 to STBs 1180. Ethernet or other LAN technology is suitable for this function.

A new STB operating in accordance with the present invention is provided with a means of communication with the signal selector and combiner in the ODU. At power up or at periodic intervals the ODU or the STB initiates communication over the attached cable. This communication can be an in band or out of band signal. The ODU polls the STBs connected to determine if the STB is a conventional STB or new design STB. Because conventional STBs will not respond to the polling request, the absence of response is an indication of a conventional STB. A new STB will respond to the polling request and establish communication with the ODU.

The means of communication on the cable can be a TDMA frame structure with slots assigned to each STB, a frequency division multiplex (FDM) approach with unique frequencies assigned to each STB, or any other known technique for two-way communication by multiple devices over a signal channel. An extension of DiSEqC protocol commonly used for satellite dish control can be used for this communication. DiSEqC uses a gated 22 kHz carrier to communicate binary data and can be adapted for use to transfer data needed. The data rates are low for this communication path. Device configuration, channel mapping, and channel requests are among the types of data communicated between the ODU and STB.

Referring to Fig. 12, signal selector and combiner 1220 taps the signals output from each LNB to provide the transponder selection function. Switch 1220 is under control of the signal selector and combiner 1210. Switch 1220 will be actuated to supply either a conventional signal from

multiport switch 1260 or the composite transponder signal from signal selector and combiner 1210. Switch 1220 can be a solid-state device or electro-mechanical relay.

Referring to Fig. 16, another application of the present invention is to provide selected transponder signals along with other services transmitted on the same cable wiring. The selected transponder signals can be transmitted in unoccupied regions of the cable, such as above, below, or between broadband satellite signals. The number of transponder channels transmitted can be adapted to the available spectrum. In one example, 950 MHz to 1450 MHz is used by one conventional LNB output signal; 1550 MHz to 2050 MHz is used by another conventional LNB output, leaving 1450 MHz to 1550 MHz available. One or more selected transponder channels from any LNB can be inserted into this region. Suitable guard bands need to be provided to prevent interference, for example 3 transponder channels at 31.25 MHz spacing uses 93.75 MHz. Another example of this application is to combine a standard CATV signal occupying 50 to 750 MHz with selected satellite transponder channels that are combined and transmitted at frequencies above the CATV band.

Using the present invention, any number of transponder channels can be selected and combined. Conventional IRD tuners are designed to tune channels anywhere in a 500 MHz or 1000 MHz range, requiring a wide tuning range for the front-end filter and LO. In an application where few channels are needed, the tuner range can be narrower, thus simplifying the design and lower cost. For example, a residential installation may typically have four television sets, some tuning only one channel at a time; others tune two channels in the case of picture in picture (PIP) or personal video recorder (PVR). This application would require 4 to 8 channels be distributed in the house simultaneously. A tuner would be required to tune over a 125 MHz to 250 MHz range.

Several variations in architecture are possible using the present invention. At each stage in the signal path, alternatives are available for implementation. Specific functions can be implemented in the analog domain or digital domain. Dedicated resources can be provided for each possible connection, or a pool of resources can be used. Dedicated resources insure that the peak demand can be satisfied unconditionally, but leads to unused capacity. Pooling enables a

trunking efficiency to be realized and exploits statistical properties of usage to address most requirements.

A pool of A/D converters that can accept a signal from any LNB output through an RF crossbar switch. The number of simultaneous LNB signals that can be processed is limited to the number of A/D converters provided. Alternatively, dedicated A/D converters, one connected to each LNB output allows all LNBs to be processed if needed.

A pool of filter/selectors connected to a common bus, the pool size dictating the number of simultaneous transponder channels that can be selected. Alternatively, a predetermined number of filters can be attached to each A/D converter.

The filters/selectors can be grouped with each LNB or can be a common resource available to process any signal from any LNB. This choice trades off circuit complexity of implementing more filters with circuit complexity of routing LNB outputs through a crossbar switch.

Each of the operations of mixing, filtering, and combining can be done as an analog operation or digital operation.

Partitioning of functions can take a number of forms. The circuitry can be implemented in a monolithic integrated circuit (IC), a hybrid, discrete components, or a combination of technologies.

Another application of the present invention is to simplify upgrades to an existing system. A dual tuner STB that enables viewing and recording of two different channels requires two input cables to allow any combination of LNB signals to be received. A single cable input would be limited to viewing and recording two channels from the same LNB output. When the upgrade is performed, the installation of an additional cable is difficult. By selecting and combining the desired channels at the ODU a single cable can be used to transmit all channels. A re-map of channel locations occurs. A conventional dual tuner STB can be used with this approach by

providing a splitter at the input to the STB that supplies the composite signal to both cable inputs. A software upgrade to the STB may be needed to support the channel re-mapping.

Other implementations for signal processing include: No cross point switch, digitize, digital filter select, frequency translate, RF combine; cross point switch, analog tuner select, frequency translate, RF combine; digitize, digital filter select, digital network combine; digitize, digital filter select, decode, MPEG stream over a network; digitize, digital filter select, decode, MPEG to analog, restack channels, RF combine. One skilled in the art will recognize that many variations are possible to implement the present invention of selecting signals and combining onto a signal cable.

Another property of the present invention is that the process of digitizing, selecting, and combining is modulation independent. Either a digital or analog selecting and combining approach can be designed to process any form of phase/amplitude modulation. Although the dominant modulation type in direct broadcast satellite systems is QPSK, alternatively BPSK, 8-PSK or multi-level QAM and PSK signals can be distributed in the same way.

What is claimed is:

1. A signal distribution system for distributing a plurality of signals over a communication channel to a receiver comprising:

a signal selector that receives a plurality of wideband signals comprising a plurality of narrowband signals and selects at least one narrowband signal from at least one wideband signal;

a frequency translator coupled to the signal selector that is capable of shifting the selected narrowband signal to a predetermined carrier frequency to produce an RF signal; and

a signal combiner coupled to at least one frequency translator capable of combining at least two RF signals to produce a composite signal;

whereby the composite signal is transmitted to the receiver.

2. The signal distribution system of claim 1 wherein the communication channel is a single cable connected between the signal selector and the receiver.

3. The signal distribution system of claim 1 wherein the signal selector comprises an analog to digital converter and a digital filter.

4. The signal distribution system of claim 1 wherein the signal selector comprises a tuner.

5. The signal distribution system of claim 1 wherein the signal selector is responsive to channel select information transmitted by a receiving unit.

6. The signal distribution system of claim 5 wherein channel select information is transmitted over the same cable as the composite signal.

7. The signal distribution system of claim 5 wherein channel select information is transmitted over a wireless link.

8. A signal distribution system for distributing signals comprising a plurality of channels from a plurality of sources between a first unit and a second unit over a communication medium comprising:

means in the first unit for selecting channels from a plurality of sources and combining the selected channels into a composite signal and transmitting the composite signal over the medium; and

means in the second unit for receiving the composite signal; and

means in the first unit and second units for bi-directionally communicating control information between both units.

9. The signal distribution system of claim 8 wherein the control information comprises channel selection requests originating from the second unit and the control information comprises channel mapping information originating from the first unit.

10. The signal distribution system of claim 8, further comprising a means for carrier offset correction.

11. The signal distribution system of claim 8 wherein the first unit is a satellite outdoor unit and the second unit is a satellite integrated receiver decoder unit.

12. The signal distribution system of claim 11 wherein the communication medium is a coaxial cable connected to the satellite outdoor unit.

13. The signal distribution system of claim 12 wherein the means for bi-directional communicating uses the same communication medium as the composite signal.

14. A method of communicating a plurality of transponder signals from a satellite outdoor unit (ODU) to integrated receiver decoders (IRDs) over a single cable connected to the ODU, the method comprising the steps of:

communicating a transponder request signal to the ODU;

in the ODU, selecting a transponder signal responsive to the transponder request signal;

combining selected transponder signals into a composite signal;

transmitting the composite signal over the single cable from the ODU to IRDs.

15. The method of claim 14 wherein the step of selecting a transponder signal comprises the step of: filtering a transponder signal with a band pass filter having a bandwidth substantially wider than the bandwidth of the transponder signal.

16. The method of claim 14 further comprising frequency translating the selected transponder channels before combining.

17. The method of claim 14 further comprising frequency translating the selected transponder channels to a predetermined frequency before combining.

18. The method of claim 14 further comprising the step of splitting the composite signal inside a home and distributing to a plurality of IRDs.

19. The method of claim 14 wherein the transponder request signal is transmitted over the cable from an IRD.

20. The method of claim 14 wherein the transponder request signal is transmitted over a wireless link to the ODU.

21. The method of claim 14 further comprising the steps of:

frequency translating the selected transponder channels to a predetermined frequency before combining; and

splitting the composite signal inside a home and distributing to a plurality of IRDs.

22. The method of claim 21 wherein the transponder request signal is transmitted over the cable from an IRD.

23. The method of claim 21 wherein the transponder request signal is transmitted over a wireless link to the ODU.

ABSTRACT

In a satellite receiving system, program channels are selected from one or more broadband signals and combined with other selected channels and transmitted from a first unit, for example an outdoor unit, to a second unit, for example a gateway, server, or set-top box, using a single cable. Channels can be selected by digitizing the broadband signal then digitally filtering to isolate the desired channels. The outputs of several LNBs can be selected and combined into one signal. Multiple set-top boxes can receive independent signals over a single cable from the outdoor unit.

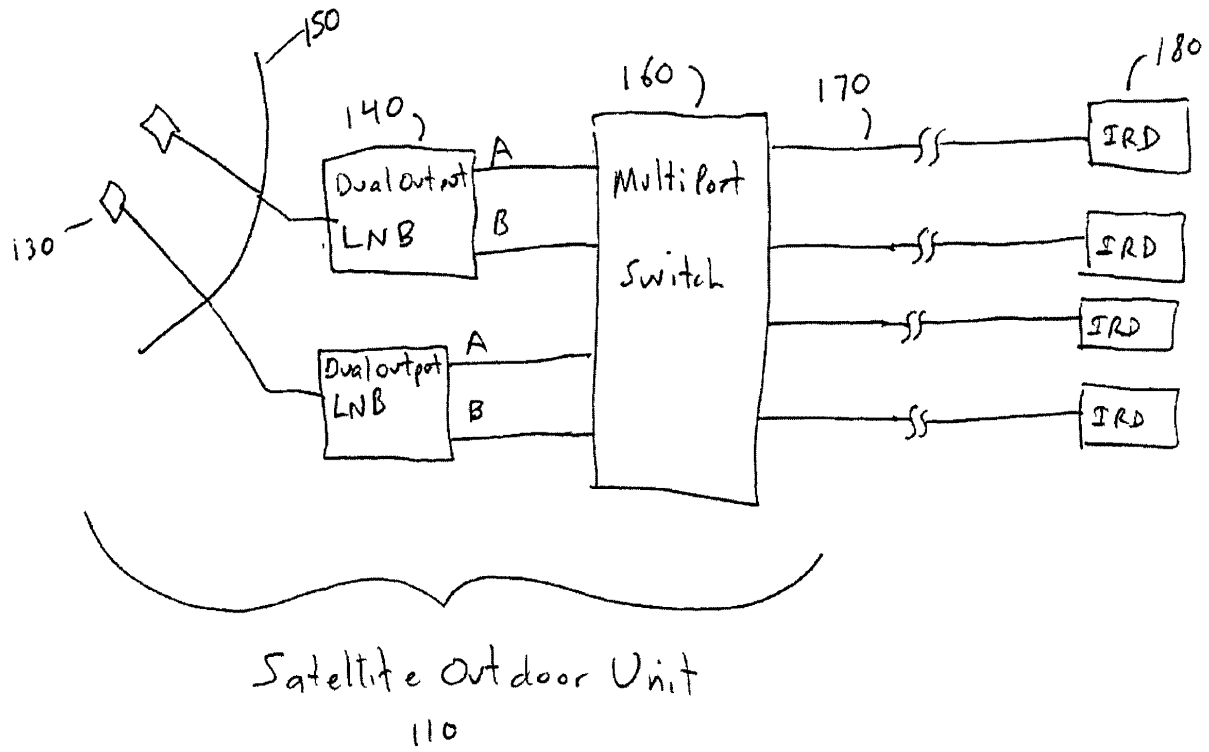

Fig 1. Prior Art

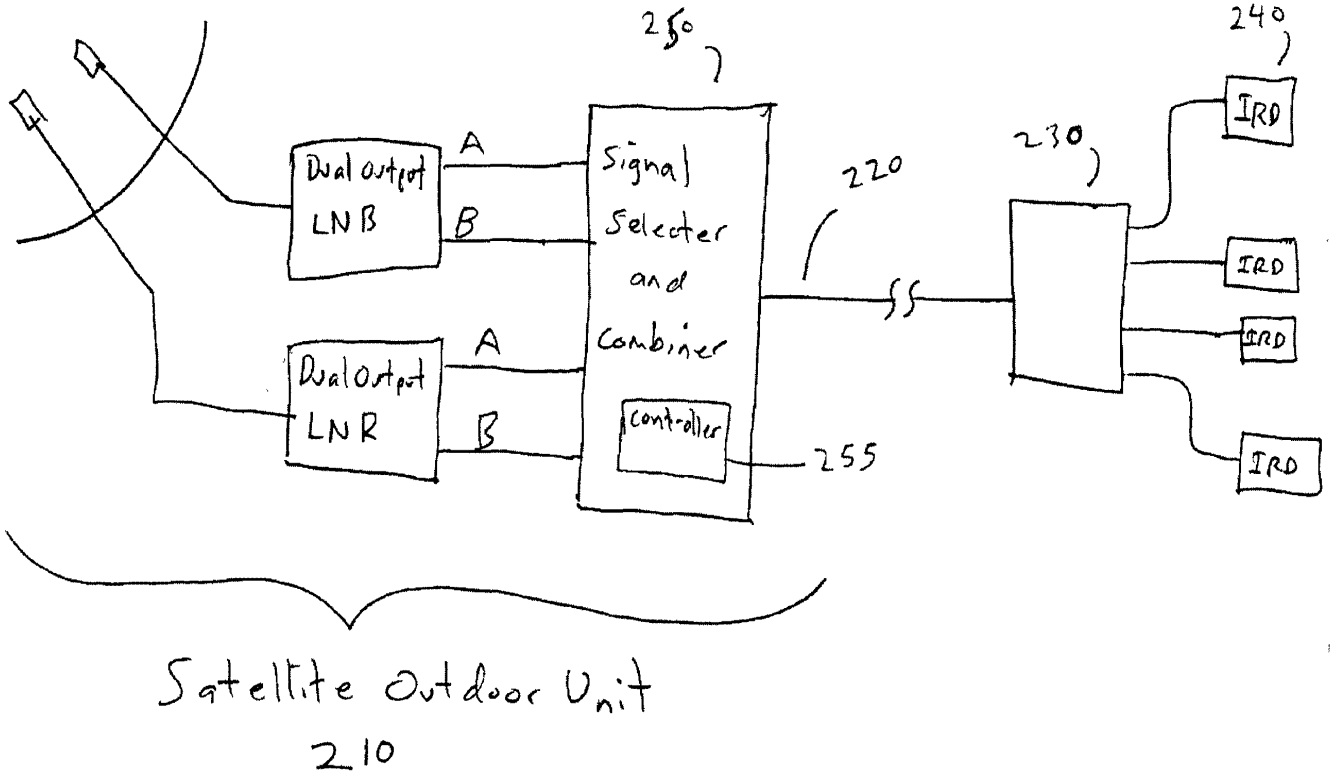
250
240
Dual output LNB
A
B
Signal Selecter and Combiner
220
230
IRD
IRD
IRD
IRD
Dual Output LNR
A
B
Controller
255
Satellite Outdoor Unit
210

Fig 2

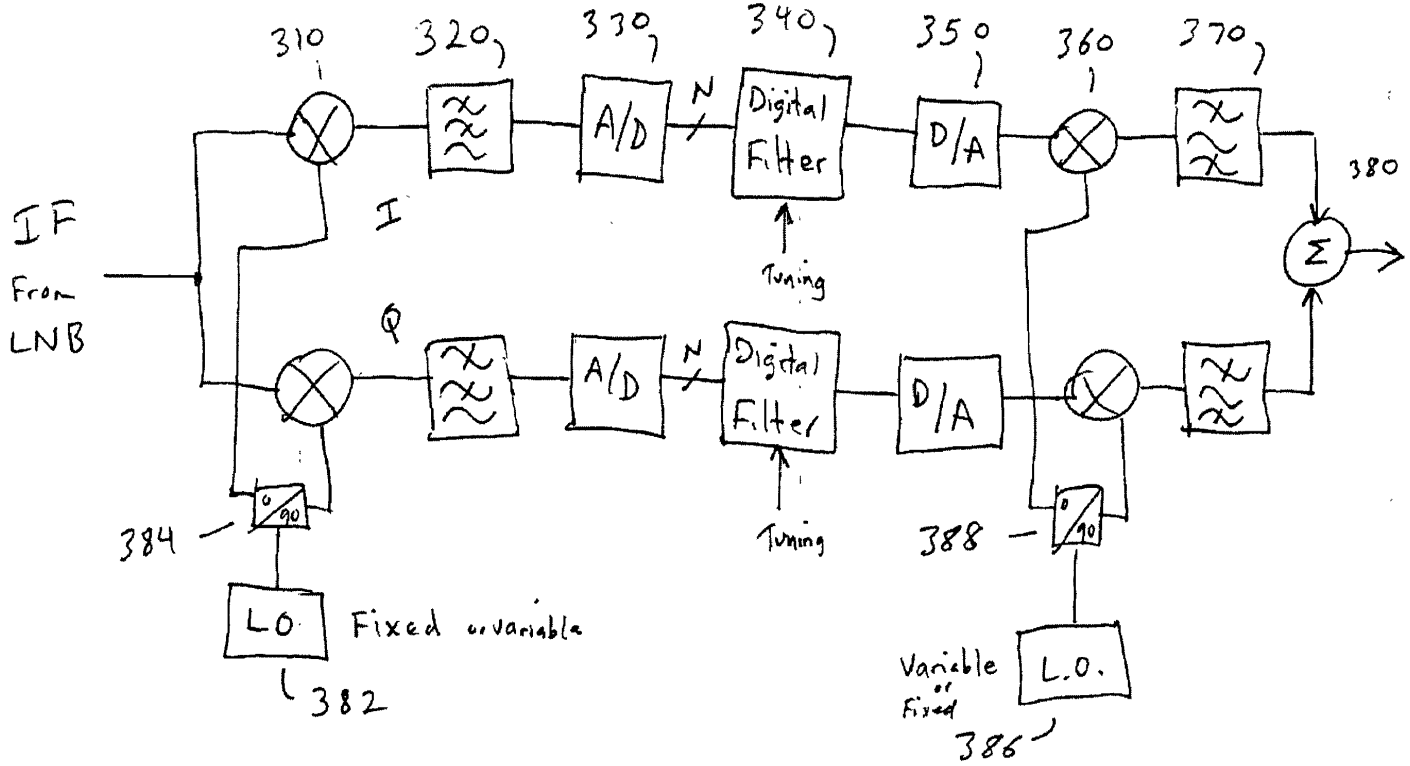
IF
From
LNB
310
320
330
340
350
360
370
380
A/D
N
Digital
Filter
D/A
I
Q
Tuning
Tuning
Σ
384
388
0
90
LO
Fixed or variable
382
Variable
or
Fixed
L.O.
386

Fig 3

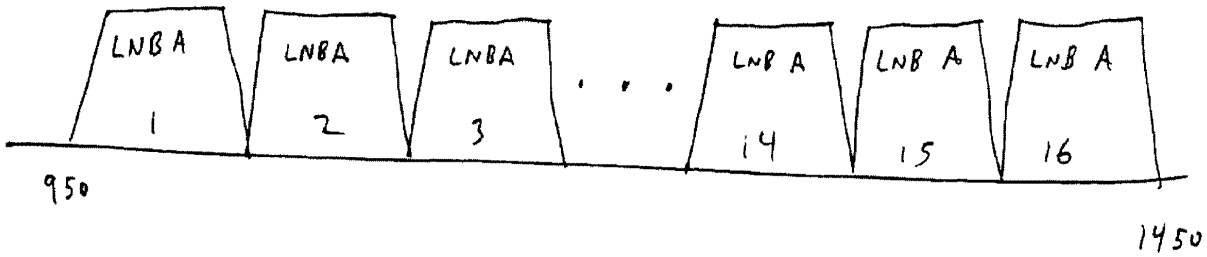

Fig 4

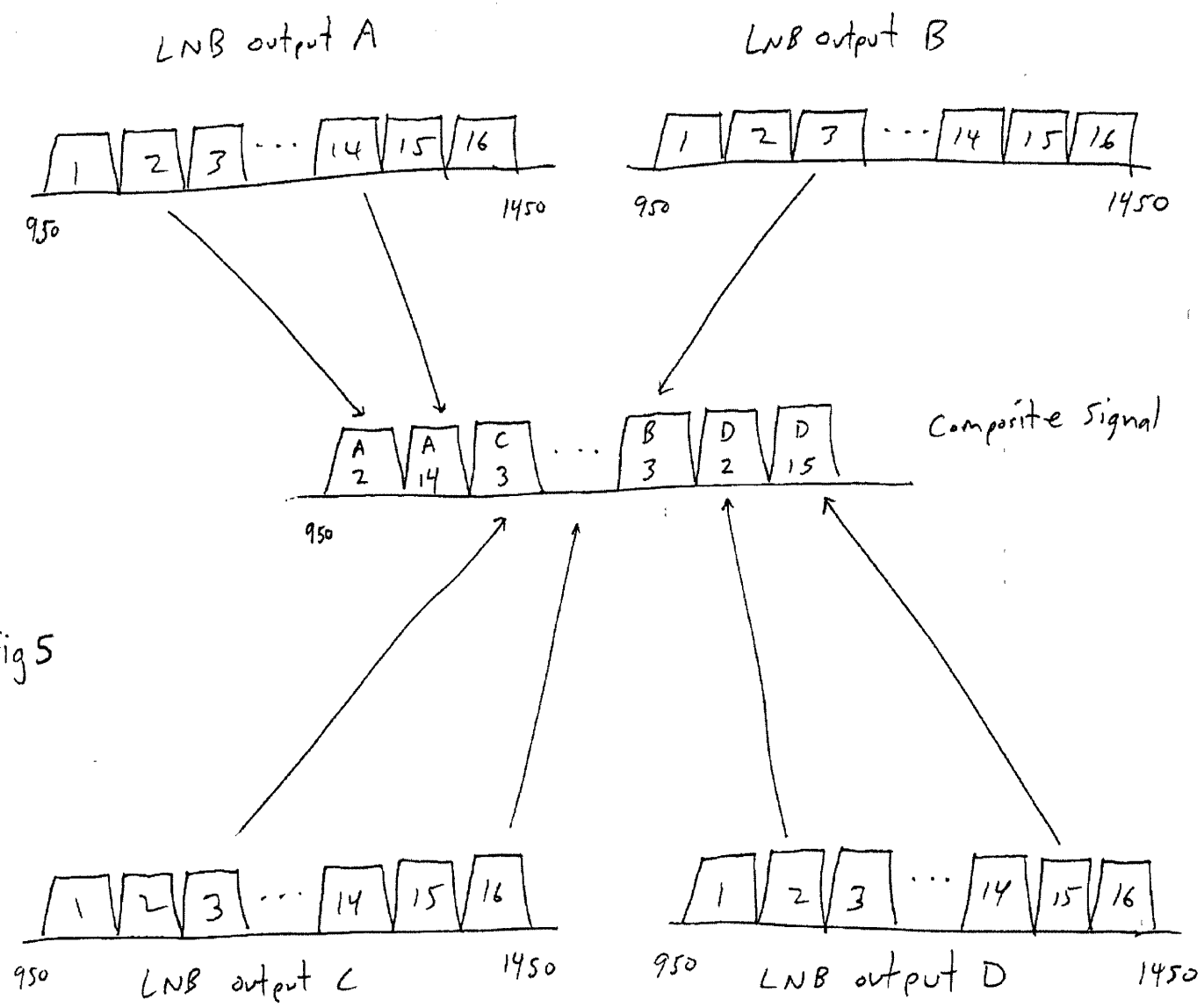
LNB output A
1 2 3 ... 14 15 16
950
1450
LNB output B
1 2 3 ... 14 15 16
950
1450
Composite Signal
A 2
A 14
C 3
B 3
D 2
D 15
950
1 2 3 ... 14 15 16
950
LNB output C
1450
1 2 3 ... 14 15 16
950
LNB output D
1450

Fig 5

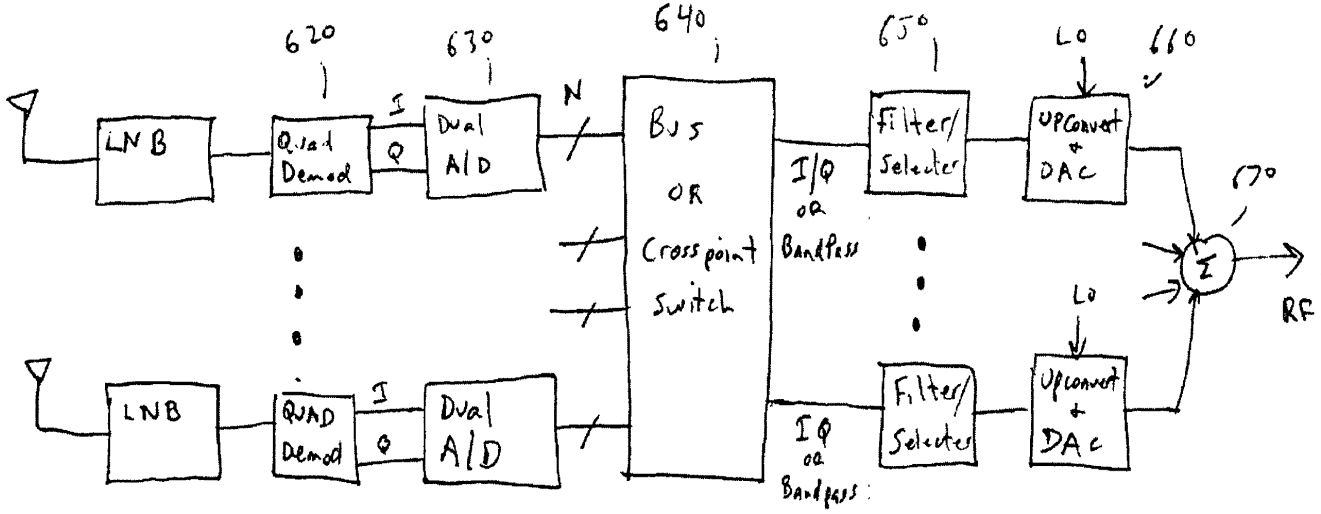

Digital Routing of Digitized Signals

Fig 6.

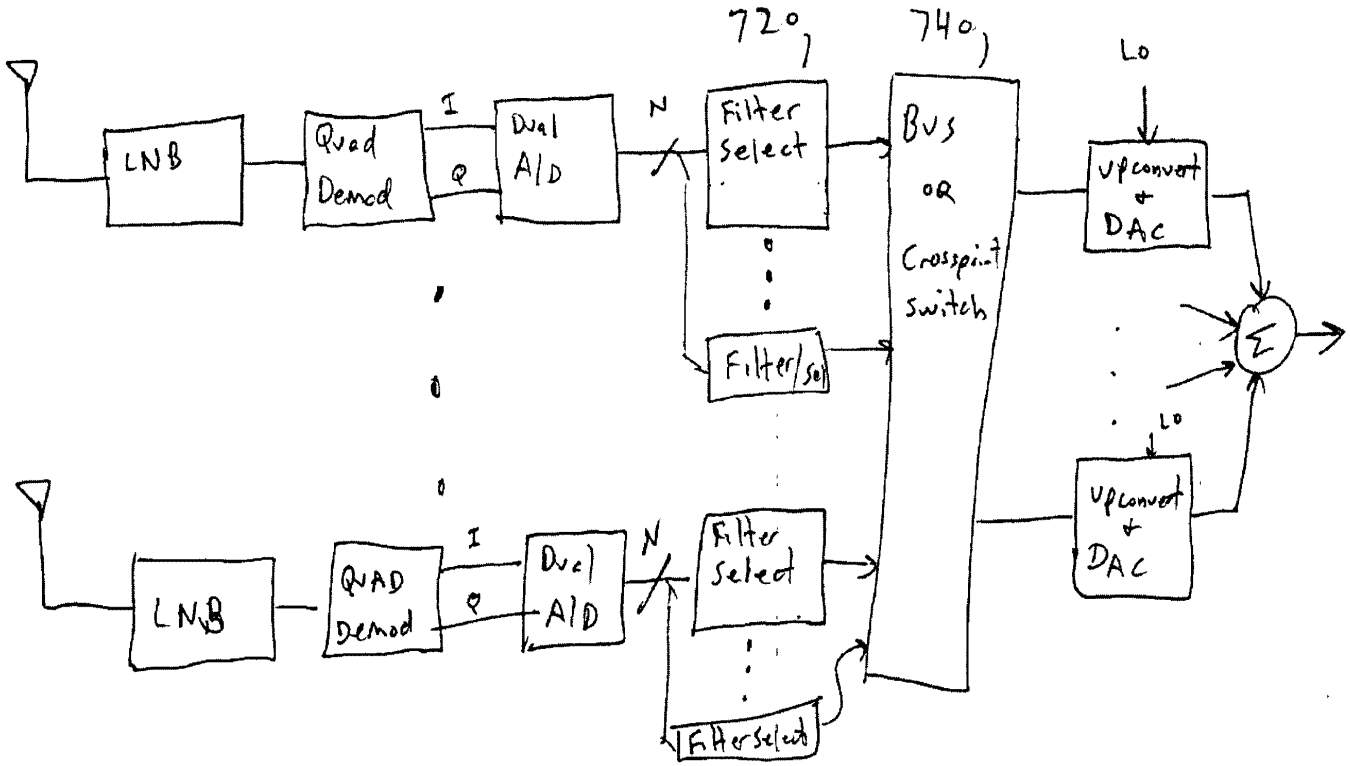

Digital Routing of Digitized Signals

Fig 7

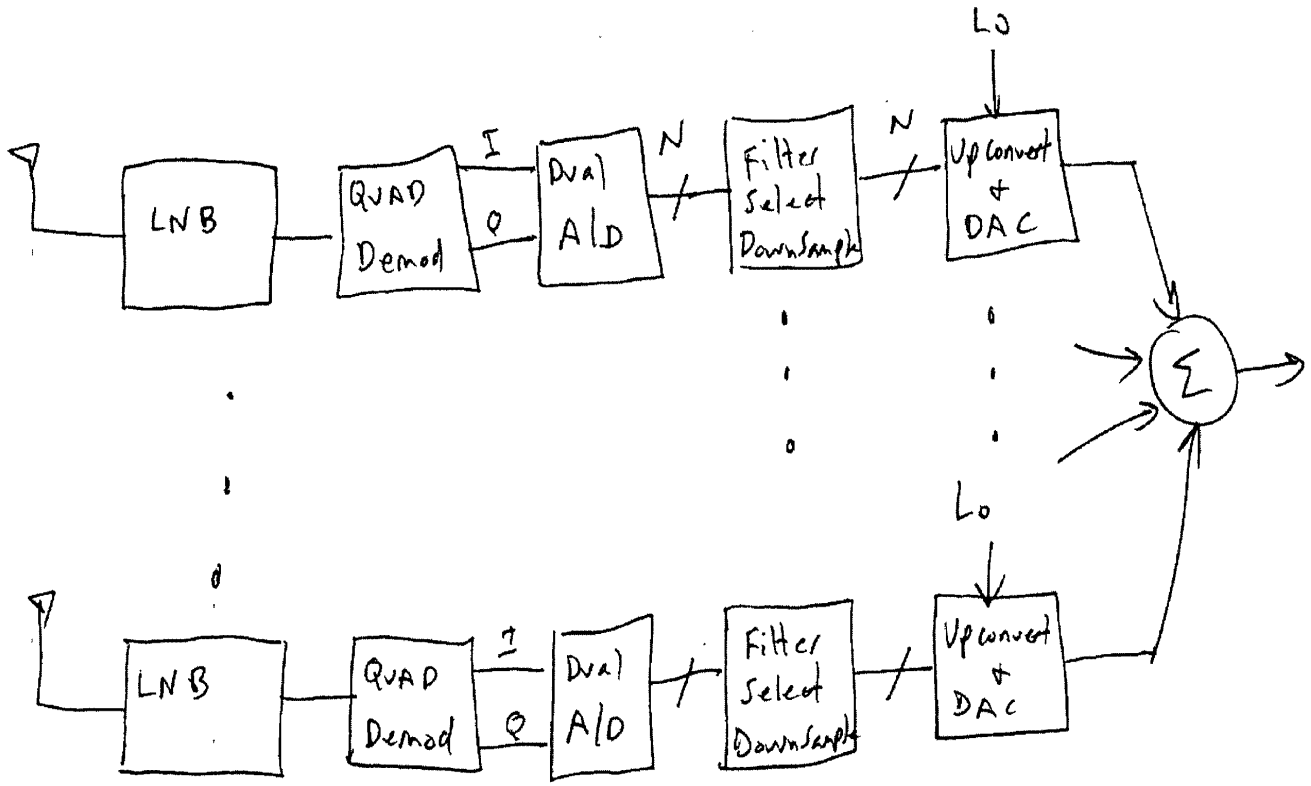
LO
LNB
QUAD Demod
I
Q
Dual A/D
N
Filter Select DownSample
N
Upconvert + DAC
Σ
LO
LNB
QUAD Demod
I
Q
Dual A/D
Filter Select DownSample
Upconvert + DAC

Fig 8.

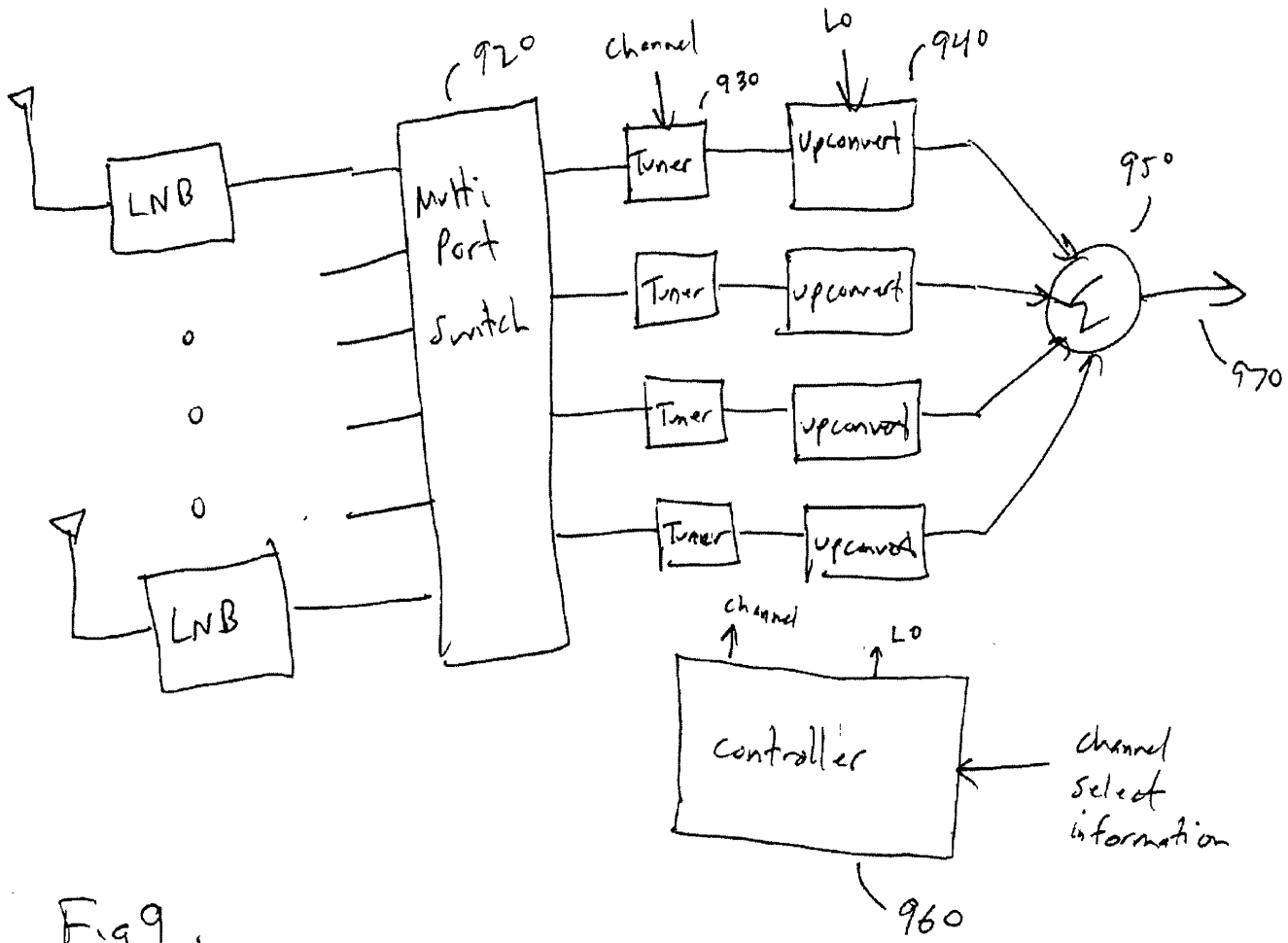
LNB
LNB
Multi Port Switch
920
Channel
930
LO
940
Tuner
Tuner
Tuner
Tuner
Upconvert
upconvert
upconvert
upconvert
950
970
Channel
LO
Controller
Channel Select information
960

Fig 9.

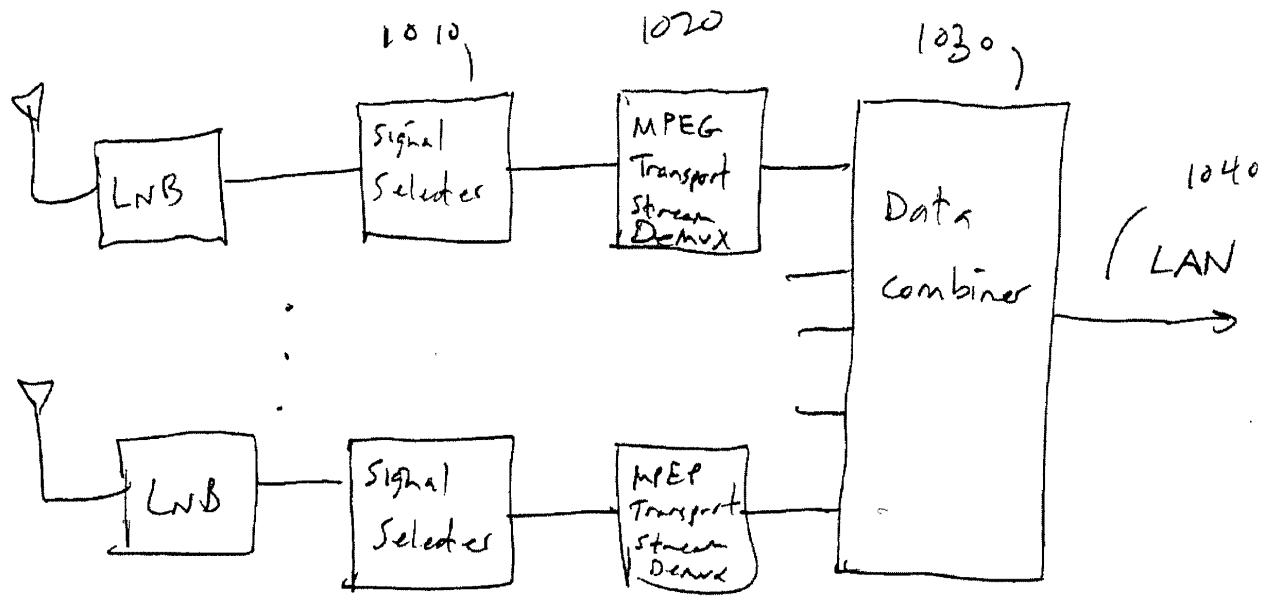
1010
1020
1030
1040
LNB
Signal Selector
MPEG Transport Stream Demux
Data Combiner
LAN
LNB
Signal Selector
MPEG Transport Stream Demux

Fig 10

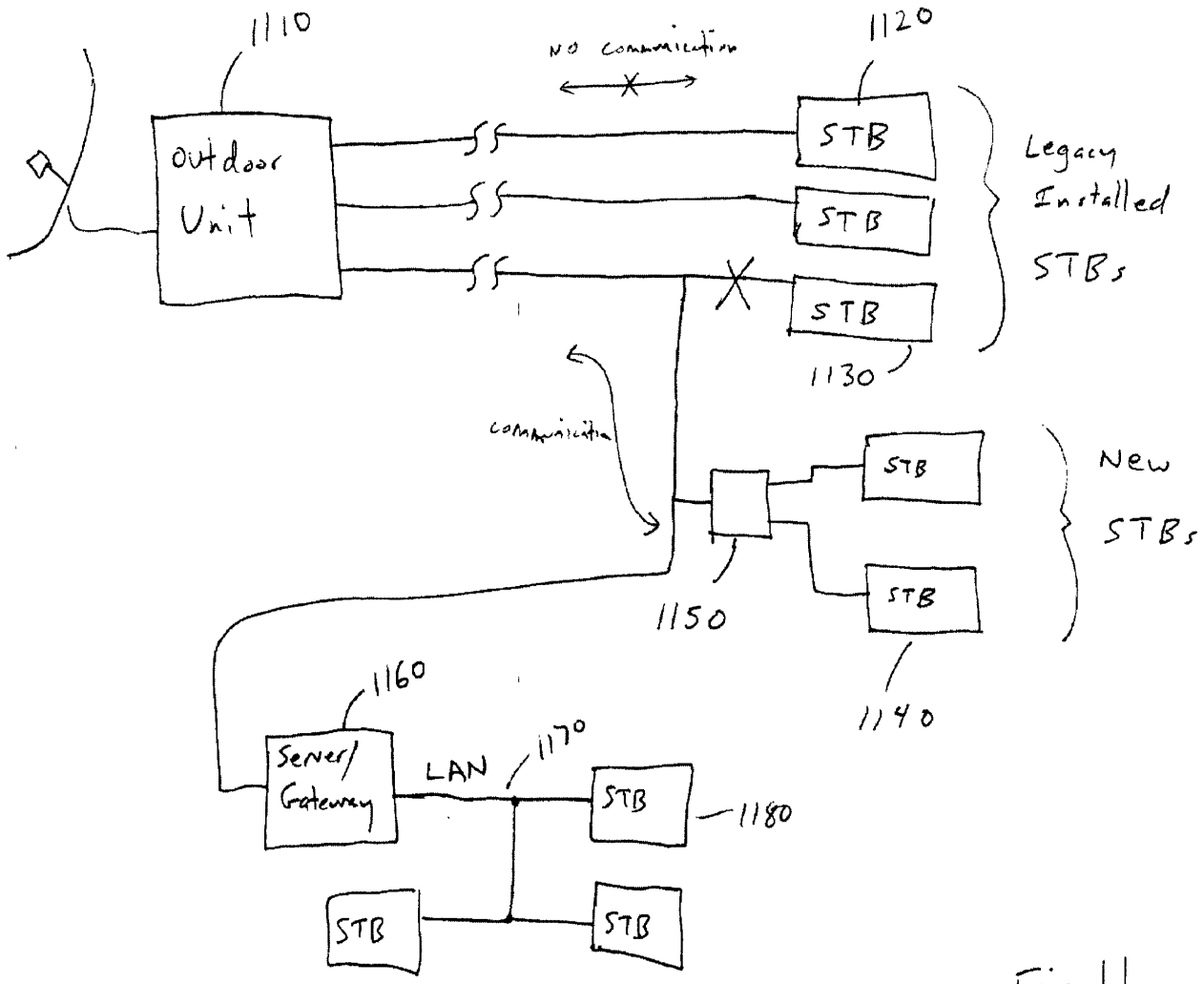
1110
Outdoor Unit
No communication
1120
STB
STB
STB
Legacy Installed STBs
1130
communication
STB
STB
New STBs
1150
1140
1160
Server/ Gateway
LAN
1170
STB
1180
STB
STB

Fig 11

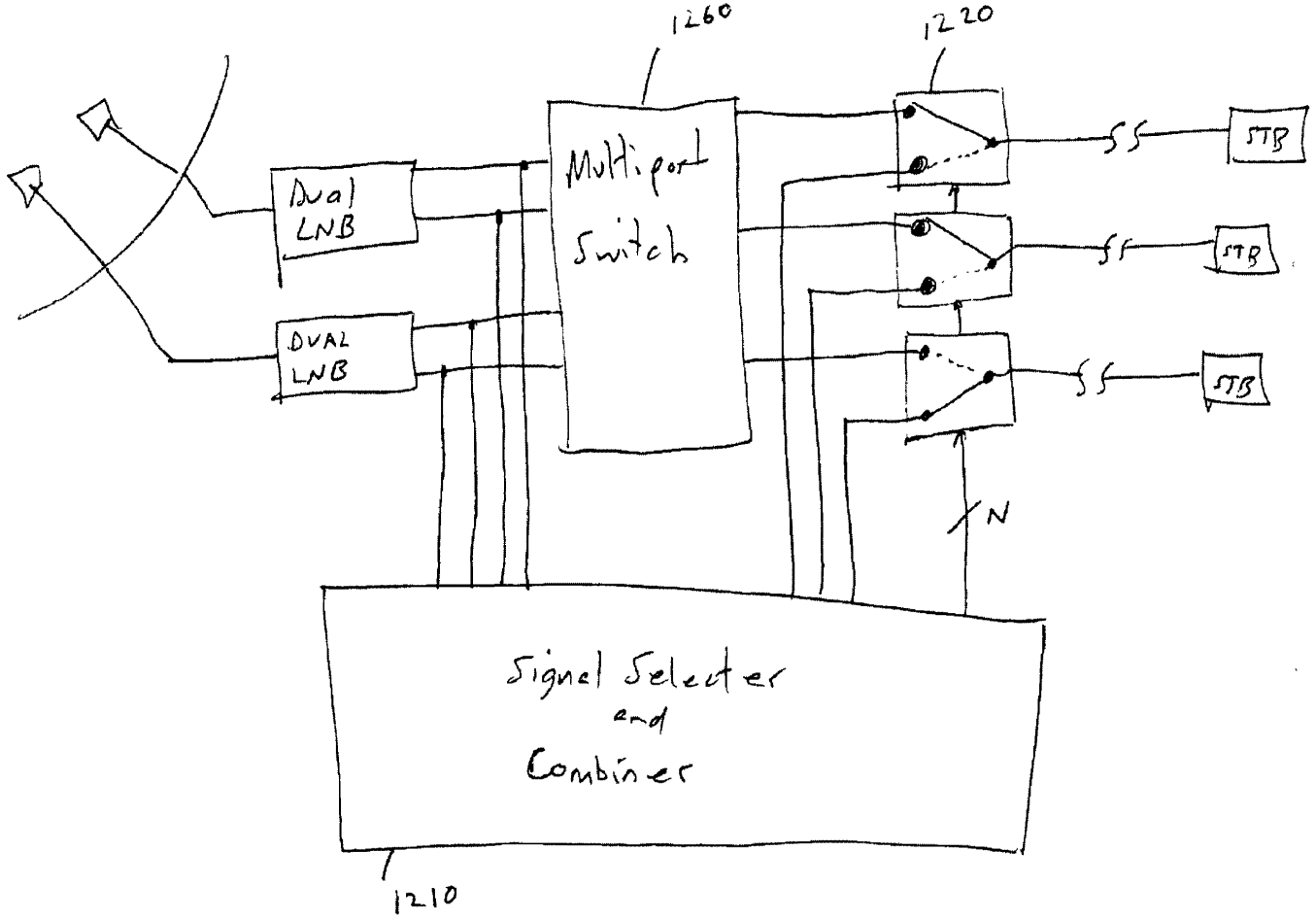
1260
1220
Dual LNB
DUAL LNB
Multiport Switch
STB
STB
STB
N
Signal Selecter and Combiner
1210

Fig 12

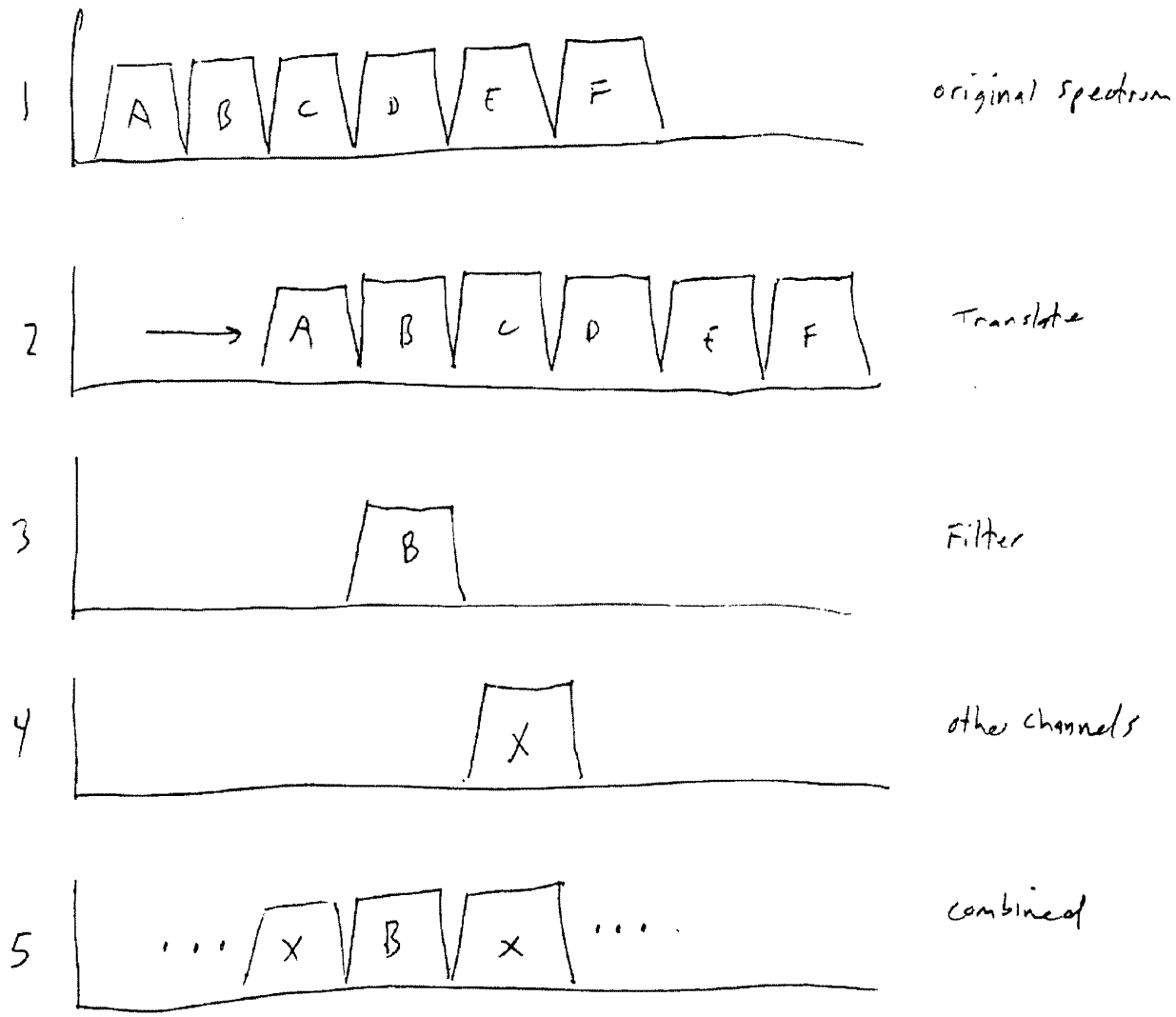
1
A
B
C
D
E
F
original spectrum
2
A
B
C
D
E
F
Translate
3
B
Filter
4
X
other channels
5
...
X
B
X
...
combined

Fig 13

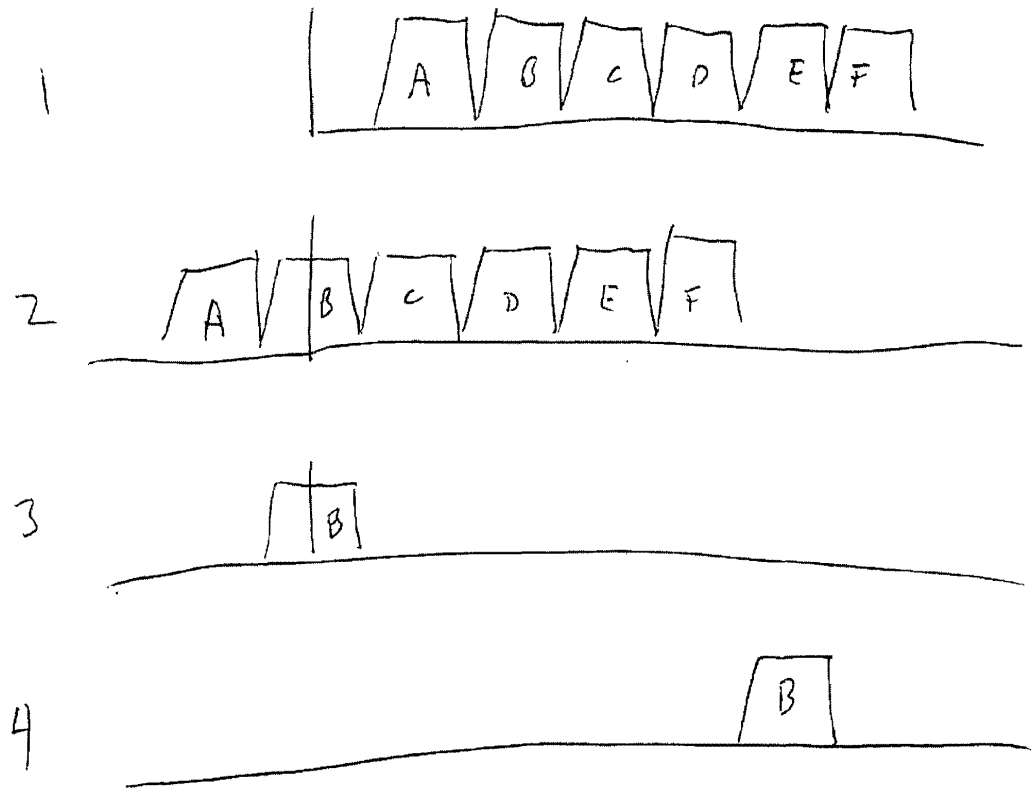

Translate to baseband, Filter, Translate to channel Frequency

Fig 14

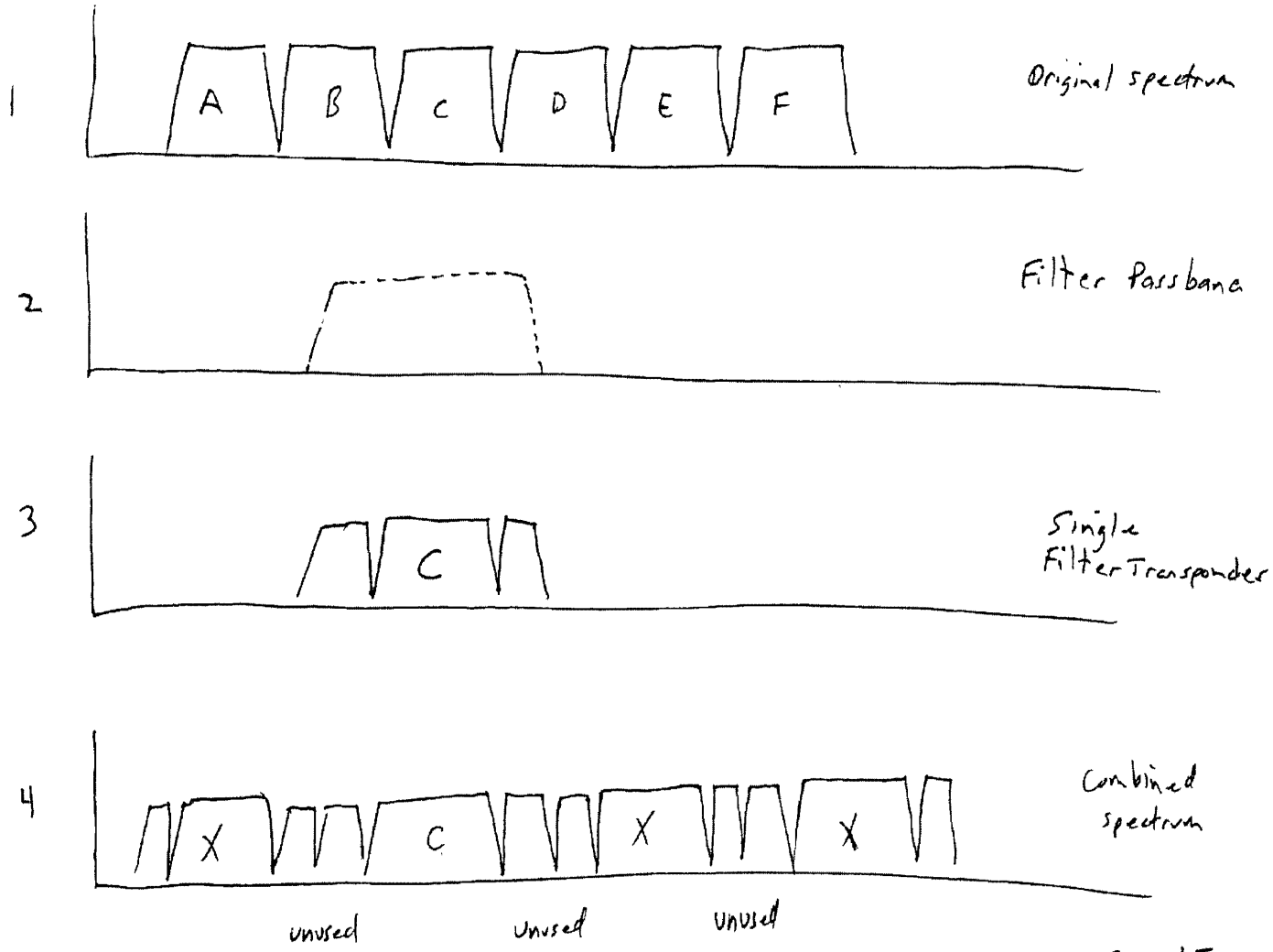
1
A
B
C
D
E
F
Original spectrum
2
Filter Passbana
3
C
Single
Filter Transponder
4
X
C
X
X
Combined
spectrum
unused
unused
unused

Fig. 15

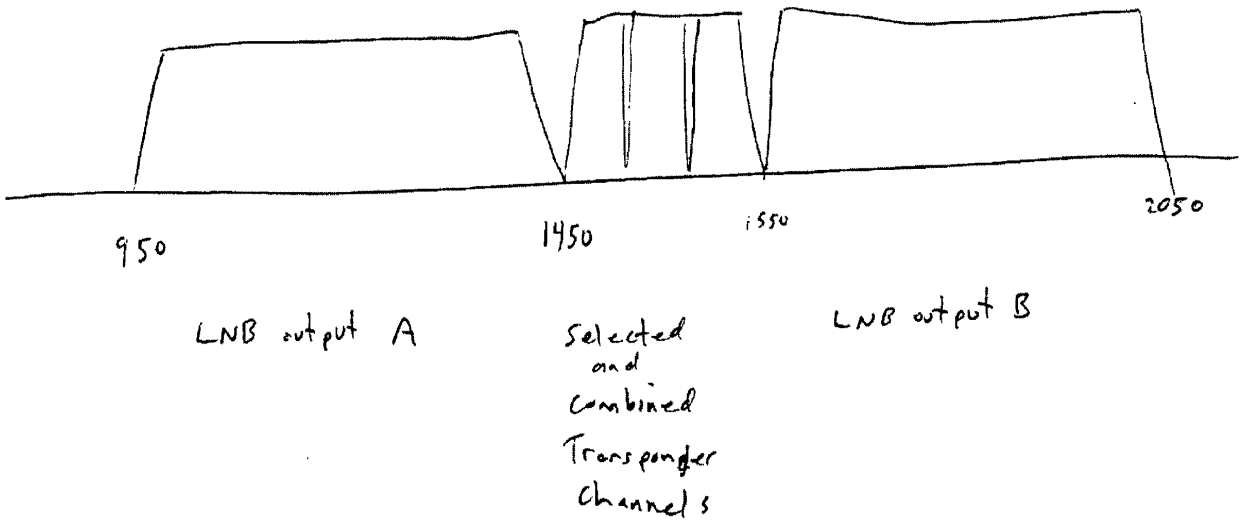
950
1450
1550
2050
LNB output A
Selected and Combined Transponder Channels
LNB output B

Fig. 16

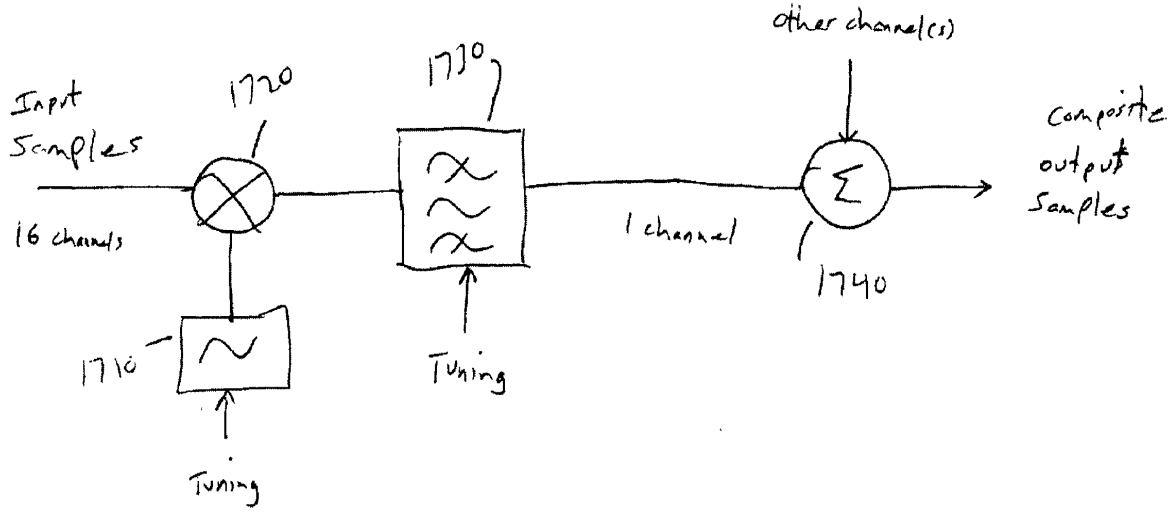

Digital Frequency translator and Filter with summer

fig 17

UNITED STATES PATENT AND TRADEMARK OFFICE

Commissioner for Patents
Washington, DC 20231
www.uspto.gov

Bib Data Sheet

CONFIRMATION NO. 9030

SERIAL NUMBER	FILING DATE	CLASS	GROUP ART UNIT	ATTORNEY DOCKET NO.
10/289,011	11/06/2002 RULE	704	2681	9226

APPLICANTS

Itzhak Gurantz, San Diego, CA;
Ladd El Wardani, La Jolla, CA;
Michael Landry, San Diego, CA;

**** CONTINUING DATA ****************************

This appln claims benefit of 60/345,965 11/07/2001
and claims benefit of 60/333,722 11/27/2001
and claims benefit of 60/358,817 02/22/2002

**** FOREIGN APPLICATIONS **********************

IF REQUIRED, FOREIGN FILING LICENSE GRANTED ** SMALL ENTITY **
** 12/12/2002

		STATE OR COUNTRY	SHEETS DRAWING	TOTAL CLAIMS	INDEPENDENT CLAIMS
Foreign Priority claimed 35 USC 119 (a-d) conditions met Verified and Acknowledged	☐ yes ☐ no ☐ yes ☐ no ☐ Met after Allowance Examiner's Signature Initials	CA	17	23	3

ADDRESS

24244

TITLE

Signal selector and combiner for broadband content distribution

FILING FEE RECEIVED		
462	FEES: Authority has been given in Paper No. _____ to charge/credit DEPOSIT ACCOUNT No. _____ for following:	☐ All Fees ☐ 1.16 Fees (Filing) ☐ 1.17 Fees (Processing Ext. of time) ☐ 1.18 Fees (Issue) ☐ Other _____ ☐ Credit

PATENT APPLICATION SERIAL NO. _____

U.S. DEPARTMENT OF COMMERCE
PATENT AND TRADEMARK OFFICE
FEE RECORD SHEET

11/08/2002 AADOF01 00000051 10289011

01 FC:2001	370.00 OP
02 FC:2202	27.00 OP

PTO-1556
(5/87)

*U.S. Government Printing Office: 2002 — 489-267/69033

PATENT APPLICATION FEE DETERMINATION RECORD
Effective October 1, 2001

Application or Docket Number: 9226

CLAIMS AS FILED - PART I

1.8.14

	(Column 1)	(Column 2)
TOTAL CLAIMS	23	
FOR	NUMBER FILED	NUMBER EXTRA
TOTAL CHARGEABLE CLAIMS	23 minus 20=	* 3
INDEPENDENT CLAIMS	3 minus 3 =	* 0
MULTIPLE DEPENDENT CLAIM PRESENT		☐

* If the difference in column 1 is less than zero, enter "0" in column 2

SMALL ENTITY TYPE ☐		OR	OTHER THAN SMALL ENTITY	
RATE	FEE		RATE	FEE
BASIC FEE	370.00	OR	BASIC FEE	740.00
X$ 9=	27	OR	X$18=	
X42=	0	OR	X84=	
+140=	0	OR	+280=	
TOTAL	397	OR	TOTAL	

CLAIMS AS AMENDED - PART II

AMENDMENT A

	(Column 1) CLAIMS REMAINING AFTER AMENDMENT		(Column 2) HIGHEST NUMBER PREVIOUSLY PAID FOR	(Column 3) PRESENT EXTRA
Total	*	Minus	**	=
Independent	*	Minus	***	=
FIRST PRESENTATION OF MULTIPLE DEPENDENT CLAIM				☐

SMALL ENTITY		OR	OTHER THAN SMALL ENTITY	
RATE	ADDITIONAL FEE		RATE	ADDITIONAL FEE
X$ 9=		OR	X$18=	
X42=		OR	X84=	
+140=		OR	+280=	
TOTAL ADDIT. FEE		OR	TOTAL ADDIT. FEE	

AMENDMENT B

	(Column 1) CLAIMS REMAINING AFTER AMENDMENT		(Column 2) HIGHEST NUMBER PREVIOUSLY PAID FOR	(Column 3) PRESENT EXTRA
Total	*	Minus	**	=
Independent	*	Minus	***	=
FIRST PRESENTATION OF MULTIPLE DEPENDENT CLAIM				☐

RATE	ADDITIONAL FEE		RATE	ADDITIONAL FEE
X$ 9=		OR	X$18=	
X42=		OR	X84=	
+140=		OR	+280=	
TOTAL ADDIT. FEE		OR	TOTAL ADDIT. FEE	

AMENDMENT C

	(Column 1) CLAIMS REMAINING AFTER AMENDMENT		(Column 2) HIGHEST NUMBER PREVIOUSLY PAID FOR	(Column 3) PRESENT EXTRA
Total	*	Minus	**	=
Independent	*	Minus	***	=
FIRST PRESENTATION OF MULTIPLE DEPENDENT CLAIM				☐

RATE	ADDITIONAL FEE		RATE	ADDITIONAL FEE
X$ 9=		OR	X$18=	
X42=		OR	X84=	
+140=		OR	+280=	
TOTAL ADDIT. FEE		OR	TOTAL ADDIT. FEE	

* If the entry in column 1 is less than the entry in column 2, write "0" in column 3.
** If the "Highest Number Previously Paid For" IN THIS SPACE is less than 20, enter "20."
***If the "Highest Number Previously Paid For" IN THIS SPACE is less than 3, enter "3."
The "Highest Number Previously Paid For" (Total or Independent) is the highest number found in the appropriate box in column 1.

MULTIPLE DEPENDENT CLAIM FEE CALCULATION SHEET
(FOR USE WITH FORM PTO-875)

SERIAL NO.

FILING DATE

APPLICANT(S)

CLAIMS

	AS FILED		AFTER 1st AMENDMENT		AFTER 2nd AMENDMENT			*		*		*	
	IND.	DEP.	IND.	DEP.	IND.	DEP.		IND.	DEP.	IND.	DEP.	IND.	DEP.
1	/						51						
2		/					52						
3		/					53						
4		/					54						
5		/					55						
6		/					56						
7		/					57						
8	/						58						
9		/					59						
10		/					60						
11		/					61						
12		/					62						
13		/					63						
14	/						64						
15		/					65						
16		/					66						
17		/					67						
18		/					68						
19		/					69						
20		/					70						
21		/					71						
22		/					72						
23		/					73						
24							74						
25							75						
26							76						
27							77						
28							78						
29							79						
30							80						
31							81						
32							82						
33							83						
34							84						
35							85						
36							86						
37							87						
38							88						
39							89						
40							90						
41							91						
42							92						
43							93						
44							94						
45							95						
46							96						
47							97						
48							98						
49							99						
50							100						
TOTAL IND.	3						TOTAL IND.						
TOTAL DEP.	20						TOTAL DEP.						
TOTAL CLAIMS	23						TOTAL CLAIMS						

PTO-1360 (3-76)

*MAY BE USED FOR ADDITIONAL CLAIMS OR AMENDMENTS

U.S. DEPARTMENT of COMMERCE
Patent and Trademark Office

PTO/SB/35 (11-00)
Approved for use through 10/31/2002 OMB 0651-0031
U S Patent and Trademark Office, U S DEPARTMENT OF COMMERCE
Under the Paperwork Reduction Act of 1995, no persons are required to respond to a collection of information unless it displays a valid OMB control number

NONPUBLICATION REQUEST UNDER 35 U.S.C. 122(b)(2)(B)(i)	First Named Inventor	Gurantz
	Title	Signal Selector and Combiner for Broadband Content Distribution
	Atty Docket Number	9226

I hereby certify that the invention disclosed in the attached application **has not and will not be** the subject of an application filed in another country, or under a multilateral agreement, that requires publication at eighteen months after filing.

I hereby request that the attached application not be published under 35 U.S.C. 122(b).

11/6/2002
Date

Signature

Michael W. Landry
Typed or printed name

This request must be signed in compliance with 37 CFR 1.33(b) and submitted with the application **upon filing**.

Applicant may rescind this nonpublication request at any time. If applicant rescinds a request that an application not be published under 35 U.S.C. 122(b), the application will be scheduled for publication at eighteen months from the earliest claimed filing date for which a benefit is claimed.

If applicant subsequently files an application directed to the invention disclosed in the attached application in another country, or under a multilateral international agreement, that requires publication of applications eighteen months after filing, the applicant **must** notify the United States Patent and Trademark Office of such filing within forty-five (45) days after the date of the filing of such foreign or international application. **Failure to do so will result in abandonment of this application (35 U.S.C. 122(b)(2)(B)(iii)).**

BEST AVAILABLE COPY

Burden Hour Statement This collection of information is required by 37 CFR 1.213(a) The information is used by the public to request that an application not be published under 35 U S C. 122(b) (and the PTO to process that request) Confidentiality is governed by 35 U S C 122 and 37 CFR 1 14 This form is estimated to take 6 minutes to complete This time will vary depending upon the needs of the individual case Any comments on the amount of time you are required to complete this form should be sent to the Chief Information Officer, U S Patent and Trademark Office, Washington, DC 20231 DO NOT SEND FEES OR COMPLETED FORMS TO THIS ADDRESS SEND TO. Assistant Commissioner for Patents, Washington, DC 20231

UNITED STATES PATENT AND TRADEMARK OFFICE

Commissioner for Patents
Washington, DC 20231
www.uspto.gov

APPLICATION NUMBER	FILING/RECEIPT DATE	FIRST NAMED APPLICANT	ATTORNEY DOCKET NUMBER
10/289,011	11/06/2002	Itzhak Gurantz	9226

CONFIRMATION NO. 9030

FORMALITIES LETTER

OC000000009239562

24244
MICHAEL W LANDRY
5098 SEACHASE STREET
SAN DIEGO, CA 92130

Date Mailed: 12/12/2002

NOTICE TO FILE MISSING PARTS OF NONPROVISIONAL APPLICATION

FILED UNDER 37 CFR 1.53(b)

Filing Date Granted

Items Required To Avoid Abandonment:

An application number and filing date have been accorded to this application. The item(s) indicated below, however, are missing. Applicant is given **TWO MONTHS** from the date of this Notice within which to file all required items and pay any fees required below to avoid abandonment. Extensions of time may be obtained by filing a petition accompanied by the extension fee under the provisions of 37 CFR 1.136(a).

- The oath or declaration is missing.
  A properly signed oath or declaration in compliance with 37 CFR 1.63, identifying the application by the above Application Number and Filing Date, is required.
- To avoid abandonment, a late filing fee or oath or declaration surcharge as set forth in 37 CFR 1.16(e) of $65 for a small entity in compliance with 37 CFR 1.27, must be submitted with the missing items identified in this letter.

SUMMARY OF FEES DUE:

Total additional fee(s) required for this application is **$65** for a Small Entity

- **$65** Late oath or declaration Surcharge.

A copy of this notice MUST be returned with the reply.

Customer Service Center
Initial Patent Examination Division (703) 308-1202
PART 3 - OFFICE COPY

PN

MP

PTO/SB/21 (08-00)
Approved for use through 10/31/2002. OMB 0651-0031
U.S. Patent and Trademark Office: U.S. DEPARTMENT OF COMMERCE
Under the Paperwork Reduction Act of 1995, no persons are required to respond to a collection of information unless it displays a valid OMB control number.

TRANSMITTAL FORM

(to be used for all correspondence after initial filing)

Application Number	10/289,011
Filing Date	11/06/2002
First Named Inventor	Gurantz
Group Art Unit	2661
Examiner Name	
Total Number of Pages in This Submission: 13	Attorney Docket Number: 9226

ENCLOSURES *(check all that apply)*

- [x] Fee Transmittal Form
  - [x] Fee Attached
- [ ] Amendment / Reply
  - [ ] After Final
  - [ ] Affidavits/declaration(s)
- [ ] Extension of Time Request
- [ ] Express Abandonment Request
- [ ] Information Disclosure Statement
- [ ] Certified Copy of Priority Document(s)
- [x] Response to Missing Parts/ Incomplete Application
  - [x] Response to Missing Parts under 37 CFR 1.52 or 1.53
- [x] Assignment Papers *(for an Application)*
- [ ] Drawing(s)
- [ ] Licensing-related Papers
- [ ] Petition
- [ ] Petition to Convert to a Provisional Application
- [x] Power of Attorney, Revocation Change of Correspondence Address
- [ ] Terminal Disclaimer
- [ ] Request for Refund
- [ ] CD, Number of CD(s) _____
- [ ] After Allowance Communication to Group
- [ ] Appeal Communication to Board of Appeals and Interferences
- [ ] Appeal Communication to Group *(Appeal Notice, Brief, Reply Brief)*
- [ ] Proprietary Information
- [ ] Status Letter
- [x] Other Enclosure(s) *(please identify below)*:

Cert. of Mailing

Remarks

SIGNATURE OF APPLICANT, ATTORNEY, OR AGENT

Firm *or* Individual name	Michael W. Landry
Signature	
Date	12/19/2002

CERTIFICATE OF MAILING

I hereby certify that this correspondence is being deposited with the United States Postal Service with sufficient postage as first class mail in an envelope addressed to: Commissioner for Patents, Washington, DC 20231 on this date: 12/19/2002

Typed or printed name	Michael W. Landry		
Signature	Michael W. Landry	Date	12/19/2002

Burden Hour Statement: This form is estimated to take 0.2 hours to complete. Time will vary depending upon the needs of the individual case. Any comments on the amount of time you are required to complete this form should be sent to the Chief Information Officer, U.S. Patent and Trademark Office, Washington, DC 20231. DO NOT SEND FEES OR COMPLETED FORMS TO THIS ADDRESS. SEND TO: Assistant Commissioner for Patents, Washington, DC 20231.

OIPE JC106
DEC 27 2002
PATENT & TRADEMARK OFFICE

PTO/SB/17 (11-01)
Approved for use through 10/31/2002. OMB 0651-0032
U.S. Patent and Trademark Office; U.S. DEPARTMENT OF COMMERCE
Under the Paperwork Reduction Act of 1995, no persons are required to respond to a collection of information unless it displays a valid OMB control number.

FEE TRANSMITTAL for FY 2002

Patent fees are subject to annual revision.

[x] Applicant claims small entity status. See 37 CFR 1.27

TOTAL AMOUNT OF PAYMENT ($) 105

Complete if Known	
Application Number	10/289,011
Filing Date	11/6/2002
First Named Inventor	Gurantz
Examiner Name	
Group Art Unit	2641
Attorney Docket No.	9226

METHOD OF PAYMENT *(check all that apply)*

[x] Check [ ] Credit card [ ] Money Order [ ] Other [ ] None

[x] Deposit Account:

Deposit Account Number: 502165

Deposit Account Name: Michael W. Landry

The Commissioner is authorized to: *(check all that apply)*

[ ] Charge fee(s) indicated below [x] Credit any overpayments

[x] Charge any additional fee(s) during the pendency of this application

[ ] Charge fee(s) indicated below, **except for the filing fee** to the above-identified deposit account.

FEE CALCULATION

1. BASIC FILING FEE

Large Entity Fee Code	Large Entity Fee ($)	Small Entity Fee Code	Small Entity Fee ($)	Fee Description	Fee Paid
101	740	201	370	Utility filing fee	
106	330	206	165	Design filing fee	
107	510	207	255	Plant filing fee	
108	740	208	370	Reissue filing fee	
114	160	214	80	Provisional filing fee	

SUBTOTAL (1) ($)

2. EXTRA CLAIM FEES FOR UTILITY AND REISSUE

	Extra Claims		Fee from below		Fee Paid
Total Claims		-20** =		X	=
Independent Claims		- 3** =		X	=
Multiple Dependent					=

Large Entity Fee Code	Large Entity Fee ($)	Small Entity Fee Code	Small Entity Fee ($)	Fee Description
103	18	203	9	Claims in excess of 20
102	84	202	42	Independent claims in excess of 3
104	280	204	140	Multiple dependent claim, if not paid
109	84	209	42	** Reissue independent claims over original patent
110	18	210	9	** Reissue claims in excess of 20 and over original patent

SUBTOTAL (2) ($)

***or number previously paid, if greater; For Reissues, see above*

FEE CALCULATION (continued)

3. ADDITIONAL FEES

Large Entity Fee Code	Large Entity Fee ($)	Small Entity Fee Code	Small Entity Fee ($)	Fee Description	Fee Paid
105	130	205	65	Surcharge - late filing fee or oath	65
127	50	227	25	Surcharge - late provisional filing fee or cover sheet	
139	130	139	130	Non-English specification	
147	2,520	147	2,520	For filing a request for *ex parte* reexamination	
112	920*	112	920*	Requesting publication of SIR prior to Examiner action	
113	1,840*	113	1,840*	Requesting publication of SIR after Examiner action	
115	110	215	55	Extension for reply within first month	
116	400	216	200	Extension for reply within second month	
117	920	217	460	Extension for reply within third month	
118	1,440	218	720	Extension for reply within fourth month	
128	1,960	228	980	Extension for reply within fifth month	
119	320	219	160	Notice of Appeal	
120	320	220	160	Filing a brief in support of an appeal	
121	280	221	140	Request for oral hearing	
138	1,510	138	1,510	Petition to institute a public use proceeding	
140	110	240	55	Petition to revive - unavoidable	
141	1,280	241	640	Petition to revive - unintentional	
142	1,280	242	640	Utility issue fee (or reissue)	
143	460	243	230	Design issue fee	
144	620	244	310	Plant issue fee	
122	130	122	130	Petitions to the Commissioner	
123	50	123	50	Processing fee under 37 CFR 1.17(q)	
126	180	126	180	Submission of Information Disclosure Stmt	
581	40	581	40	Recording each patent assignment per property (times number of properties)	40
146	740	246	370	Filing a submission after final rejection (37 CFR § 1.129(a))	
149	740	249	370	For each additional invention to be examined (37 CFR § 1.129(b))	
179	740	279	370	Request for Continued Examination (RCE)	
169	900	169	900	Request for expedited examination of a design application	

Other fee (specify) _____

*Reduced by Basic Filing Fee Paid **SUBTOTAL (3)** ($) 105

The PTO did not receive the following listed item(s) a check for $105.00

SUBMITTED BY				Complete *(if applicable)*	
Name *(Print/Type)*	Michael W. Landry	Registration No. *(Attorney/Agent)*	38,216	Telephone	858-229-6801
Signature	Michael W. Landry			Date	12/19/2002

WARNING: Information on this form may become public. Credit card information should not be included on this form. Provide credit card information and authorization on PTO-2038.

Burden Hour Statement: This form is estimated to take 0.2 hours to complete. Time will vary depending upon the needs of the individual case. Any comments on the amount of time you are required to complete this form should be sent to the Chief Information Officer, U.S. Patent and Trademark Office, Washington, DC 20231. DO NOT SEND FEES OR COMPLETED FORMS TO THIS ADDRESS. SEND TO: Assistant Commissioner for Patents, Washington, DC 20231.

OIPE JC106
DEC 27 2002
PATENT & TRADEMARK OFFICE

UNITED STATES
PATENT AND
TRADEMARK OFFICE

Commissioner for Patents
Washington, DC 20231
www.uspto.gov

APPLICATION NUMBER	FILING/RECEIPT DATE	FIRST NAMED APPLICANT	ATTORNEY DOCKET NUMBER
10/289,011	11/06/2002	Itzhak Gurantz	9226

CONFIRMATION NO. 9030

FORMALITIES LETTER

OC000000009239562

24244
MICHAEL W LANDRY
5098 SEACHASE STREET
SAN DIEGO, CA 92130

Date Mailed: 12/12/2002

NOTICE TO FILE MISSING PARTS OF NONPROVISIONAL APPLICATION

FILED UNDER 37 CFR 1.53(b)

Filing Date Granted

Items Required To Avoid Abandonment:

An application number and filing date have been accorded to this application. The item(s) indicated below, however, are missing. Applicant is given **TWO MONTHS** from the date of this Notice within which to file all required items and pay any fees required below to avoid abandonment. Extensions of time may be obtained by filing a petition accompanied by the extension fee under the provisions of 37 CFR 1.136(a).

- The oath or declaration is missing.
  A properly signed oath or declaration in compliance with 37 CFR 1.63, identifying the application by the above Application Number and Filing Date, is required.
- To avoid abandonment, a late filing fee or oath or declaration surcharge as set forth in 37 CFR 1.16(e) of $65 for a small entity in compliance with 37 CFR 1.27, must be submitted with the missing items identified in this letter.

SUMMARY OF FEES DUE:

Total additional fee(s) required for this application is **$65** for a Small Entity

- **$65** Late oath or declaration Surcharge.

12/31/2002 MAHMED1 00000082 502165 10289011

01 FC:2051 65.00 CH

A copy of this notice MUST be returned with the reply.

MDuong

Customer Service Center
Initial Patent Examination Division (703) 308-1202
PART 2 - COPY TO BE RETURNED WITH RESPONSE

OIPE JC106
DEC 2 7 2002
PATENT & TRADEMARK OFFICE

#3

PTO/SB/01 (10-01)
Approved for use through 10/31/2002. OMB 0651-0032
U.S. Patent and Trademark Office; U.S. DEPARTMENT OF COMMERCE
Under the Paperwork Reduction Act of 1995, no persons are required to respond to a collection of information unless it contains a valid OMB control number.

DECLARATION FOR UTILITY OR DESIGN PATENT APPLICATION (37 CFR 1.63)

☑ Declaration Submitted with Initial Filing OR ☐ Declaration Submitted after Initial Filing (surcharge (37 CFR 1.16 (e)) required)

Attorney Docket Number	9226
First Named Inventor	Gurantz
COMPLETE IF KNOWN	
Application Number	10/289,011
Filing Date	11/06/2002
Art Unit	2641
Examiner Name	

As the below named inventor, I hereby declare that:

My residence, mailing address, and citizenship are as stated below next to my name.

I believe I am the original and first inventor of the subject matter which is claimed and for which a patent is sought on the invention entitled:

Signal Selector and Combiner for Broadband Content Distribution

(Title of the Invention)

the specification of which

☐ is attached hereto

OR

☑ was filed on (MM/DD/YYYY) 11/06/2002 as United States Application Number or PCT International

Application Number 10/289,011 and was amended on (MM/DD/YYYY) _____ (if applicable).

I hereby state that I have reviewed and understand the contents of the above identified specification, including the claims, as amended by any amendment specifically referred to above.

I acknowledge the duty to disclose information which is material to patentability as defined in 37 CFR 1.56, including for continuation-in-part applications, material information which became available between the filing date of the prior application and the national or PCT international filing date of the continuation-in-part application.

I hereby claim foreign priority benefits under 35 U.S.C. 119(a)-(d) or (f), or 365(b) of any foreign application(s) for patent, inventor's or plant breeder's rights certificate(s), or 365(a) of any PCT international application which designated at least one country other than the United States of America, listed below and have also identified below, by checking the box, any foreign application for patent, inventor's or plant breeder's rights certificate(s), or any PCT international application having a filing date before that of the application on which priority is claimed.

Prior Foreign Application Number(s)	Country	Foreign Filing Date (MM/DD/YYYY)	Priority Not Claimed	Certified Copy Attached? YES	NO
			☐	☐	☐
			☐	☐	☐
			☐	☐	☐
			☐	☐	☐

☐ Additional foreign application numbers are listed on a supplemental priority data sheet PTO/SB/02B attached hereto:

Burden Hour Statement: This form is estimated to take 21 minutes to complete. Time will vary depending upon the needs of the individual case. Any comments on the amount of time you are required to complete this form should be sent to the Chief Information Officer, U.S. Patent and Trademark Office, Washington, DC 20231. DO NOT SEND FEES OR COMPLETED FORMS TO THIS ADDRESS. SEND TO: Assistant Commissioner for Patents, Washington, DC 20231.

PTO/SB/01 (10-01)
Approved for use through 10/31/2002. OMB 0651-0032
U.S. Patent and Trademark Office; U.S. DEPARTMENT OF COMMERCE
Under the Paperwork Reduction Act of 1995, no persons are required to respond to a collection of information unless it contains a valid OMB control number.

DECLARATION — Utility or Design Patent Application

Direct all correspondence to: ☑ Customer Number or Bar Code Label 24244 OR ☐ Correspondence address below

24244
PATENT TRADEMARK OFFICE

Name: Michael Landry		
Address: 5098 Seachase St.		
City: San Diego	State: CA	ZIP: 92130
Country: USA	Telephone: 858-229-6801	Fax: 858-509-0184

I hereby declare that all statements made herein of my own knowledge are true and that all statements made on information and belief are believed to be true; and further that these statements were made with the knowledge that willful false statements and the like so made are punishable by fine or imprisonment, or both, under 18 U.S.C. 1001 and that such willful false statements may jeopardize the validity of the application or any patent issued thereon.

NAME OF SOLE OR FIRST INVENTOR : ☐ A petition has been filed for this unsigned inventor

Given Name (first and middle [if any]): Itzhak		Family Name or Surname: Gurantz	
Inventor's Signature: [signature]			Date: 12/19/02
Residence: City: San Diego	State: CA	Country: USA	Citizenship: USA
Mailing Address: 5584 Shannon Ridge Lane			
City: San Diego	State: CA	ZIP: 92130	Country: USA

NAME OF SECOND INVENTOR: ☐ A petition has been filed for this unsigned inventor

Given Name (first and middle [if any]): Ladd		Family Name or Surname: El Wardani	
Inventor's Signature: [signature]			Date: 12/19/02
Residence: City: La Jolla	State: CA	Country: USA	Citizenship: USA
Mailing Address: 6416 La Jolla Scenic Dr. South			
City: San Diego	State: CA	ZIP: 92037	Country: USA

☑ Additional inventors are being named on the 1 supplemental Additional Inventor(s) sheet(s) PTO/SB/02A attached hereto.

OIPE JC106
DEC 27 2002
PATENT & TRADEMARK OFFICE

PTO/SB/02A (10-00)
Approved for use through 10/31/2002. OMB 0651-0032
U.S. Patent and Trademark Office; U.S. DEPARTMENT OF COMMERCE
Under the Paperwork Reduction Act of 1995, no persons are required to respond to a collection of information unless it contains a valid OMB control number.

DECLARATION

ADDITIONAL INVENTOR(S)
Supplemental Sheet
Page 1 of 1

Name of Additional Joint Inventor, if any:		☐ A petition has been filed for this unsigned inventor	
Given Name: Michael		Family Name or Surname: Landry	
Inventor's Signature: Michael Landry			Date: 12/19/02
Residence: City: San Diego	State: CA	Country: USA	Citizenship: USA
Mailing Address: 5098 Seachase St.			
Mailing Address:			
City: San Diego	State: CA	ZIP: 92130	Country: USA
Name of Additional Joint Inventor, if any:		☐ A petition has been filed for this unsigned inventor	
Given Name:		Family Name or Surname:	
Inventor's Signature:			Date:
Residence: City:	State:	Country:	Citizenship:
Mailing Address:			
Mailing Address:			
City:	State:	ZIP:	Country:
Name of Additional Joint Inventor, if any:		☐ A petition has been filed for this unsigned inventor	
Given Name:		Family Name or Surname:	
Inventor's Signature:			Date:
Residence: City:	State:	Country:	Citizenship:
Mailing Address:			
Mailing Address:			
City:	State:	ZIP:	Country:

Burden Hour Statement: This form is estimated to take 21 minutes to complete. Time will vary depending upon the needs of the individual case. Any comments on the amount of time you are required to complete this form should be sent to the Chief Information Officer, U.S. Patent and Trademark Office, Washington, DC 20231. DO NOT SEND FEES OR COMPLETED FORMS TO THIS ADDRESS. SEND TO: Assistant Commissioner for Patents, Washington, DC 20231.

OIPE JC106
DEC 27 2002
PATENT & TRADEMARK OFFICE

Please type a plus sign (+) inside this box → [+]

PTO/SB/81 (02-01)
Approved for use through 10/31/2002. OMB 0651-0035
U.S. Patent and Trademark Office; U.S. DEPARTMENT OF COMMERCE
Under the Paperwork Reduction Act of 1995, no persons are required to respond to a collection of information unless it display a valid OMB control number.

POWER OF ATTORNEY OR AUTHORIZATION OF AGENT

Application Number	10/289,011
Filing Date	11/6/2002
First Named Inventor	Gurantz
Title	Signal Selector and Combiner...
Group Art Unit	2641
Examiner Name	
Attorney Docket Number	9226

I hereby appoint:

[X] Practitioners at Customer Number 24244 → Place Customer Number Bar Code Label here 24244

OR

[ ] Practitioner(s) named below:

PATENT TRADEMARK OFFICE

Name	Registration Number
Michael W. Landry	38,216

as my/our attorney(s) or agent(s) to prosecute the application identified above, and to transact all business in the United States Patent and Trademark Office connected therewith.

Please change the correspondence address for the above-identified application to:

[X] The above-mentioned Customer Number.

OR

[ ] Practitioners at Customer Number 24244 → *Place Customer Number Bar Code Label here*

OR

[ ] Firm *or* Individual Name	Michael W. Landry				
Address	5098 Seachase St.				
Address					
City	San Diego	State	CA	Zip	92130
Country					
Telephone	858-229-6801	Fax	858-509-0184		

I am the:

[ ] Applicant/Inventor.

[X] Assignee of record of the entire interest. See 37 CFR 3.71.
Statement under 37 CFR 3.73(b) is enclosed. (Form PTO/SB/96).

SIGNATURE of Applicant or Assignee of Record

Name	Itzhak Gurantz, CEO Entropic Communications Inc.
Signature	
Date	12/19/02

NOTE: Signatures of all the inventors or assignees of record of the entire interest or their representative(s) are required. Submit multiple forms if more than one signature is required, see below*.

[ ] *Total of _____ forms are submitted.

Burden Hour Statement: This form is estimated to take 3 minutes to complete. Time will vary depending upon the needs of the individual case. Any comments on the amount of time you are required to complete this form should be sent to the Chief Information Officer, U.S. Patent and Trademark Office, Washington, DC 20231. DO NOT SEND FEES OR COMPLETED FORMS TO THIS ADDRESS. SEND TO: Assistant Commissioner for Patents, Washington, DC 20231.

OIPE JC106
DEC 2 7 2002
PATENT & TRADEMARK OFFICE

PTO/SB/96 (08-00)
Approved for use through 10/31/2002. OMB 0651-0031
U.S.Patent and Trademark Office; U.S. DEPARTMENT OF COMMERCE
Under the Paperwork Reduction Act of 1995, no persons are required to respond to a collection of information unless it displays a valid OMB control number.

STATEMENT UNDER 37 CFR 3.73(b)

Applicant/Patent Owner: Gurantz, et al.

Application No./Patent No.: 10/289,011 Filed/Issue Date: 11/6/2002

Entitled: Signal Selector and Combiner for Broadband Content Distribution

Entropic Communications, Inc., a Corporation,
(Name of Assignee) (Type of Assignee, e.g., corporation, partnership, university, government agency, etc.)

states that it is:

1. [X] the assignee of the entire right, title, and interest; or

2. [ ] an assignee of less than the entire right, title and interest.
The extent (by, percentage) of its ownership interest is _____%

in the patent application/patent identified above by virtue of either:

A. [X] An assignment from the inventor(s) of the patent application/patent identified above. The assignment was recorded in the United States Patent and Trademark Office at Reel _____, Frame _____, or for which a copy thereof is attached.

OR

B. [ ] A chain of title from the inventor(s), of the patent application/patent identified above, to the current assignee as shown below:

1. From:_____ To:_____
The document was recorded in the United States Patent and Trademark Office at
Reel _____, Frame_____, or for which a copy thereof is attached.

2. From:_____ To:_____
The document was recorded in the United States Patent and Trademark Office at
Reel _____, Frame_____, or for which a copy thereof is attached.

3. From:_____ To:_____
The document was recorded in the United States Patent and Trademark Office at
Reel _____, Frame_____, or for which a copy thereof is attached.

[ ] Additional documents in the chain of title are listed on a supplemental sheet.

[X] Copies of assignments or other documents in the chain of title are attached.
[NOTE: A separate copy *(i.e.,* the original assignment document or a true copy of the original document) must be submitted to Assignment Division in accordance with 37 CFR Part 3, if the assignment is to be recorded in the records of the USPTO. See MPEP 302.08]

The undersigned (whose title is supplied below) is authorized to act on behalf of the assignee.

12/19/02
Date

Itzhak Gurantz
Typed or printed name

Signature

CEO, Entropic Communications Inc.
Title

Burden Hour Statement: This form is estimated to take 0.2 hours to complete. Time will vary depending upon the needs of the individual case. Any comments on the amount of time you are required to complete this form should be sent to the Chief Information Officer, U.S. Patent and Trademark Office, Washington, DC 20231. DO NOT SEND FEES OR COMPLETED FORMS TO THIS ADDRESS. SEND TO: Assistant Commissioner for Patents, Washington, DC 20231.

Ref #	Hits	Search Query	DBs	Default Operator	Plurals	Time Stamp
L7	1185	broadcast with signal with distribution	US-PGPUB; USPAT; EPO; JPO; DERWENT	OR	ON	2005/04/26 10:25
L8	41	L7 and ird	US-PGPUB; USPAT; EPO; JPO; DERWENT	OR	ON	2005/04/26 09:07
L9	9	8 and offset	US-PGPUB; USPAT; EPO; JPO; DERWENT	OR	ON	2005/04/26 09:09
L11	23	8 and correction	US-PGPUB; USPAT; EPO; JPO; DERWENT	OR	ON	2005/04/26 09:08
L14	16396	offset with correction	US-PGPUB; USPAT; EPO; JPO; DERWENT	OR	ON	2005/04/26 09:12
L15	6	7 and 14	US-PGPUB; USPAT; EPO; JPO; DERWENT	OR	ON	2005/04/26 10:21
L20	3577	455/3.01-3.05,103,137,12.1,20,427.ccls.	US-PGPUB; USPAT; EPO; JPO; DERWENT	OR	ON	2005/04/26 10:25
L21	38	7 and 20	US-PGPUB; USPAT; EPO; JPO; DERWENT	OR	ON	2005/04/26 10:25
L22	1855	odu or outdoor adj unit	US-PGPUB; USPAT	OR	ON	2005/04/26 10:25
L23	75	20 and 22	US-PGPUB; USPAT	OR	ON	2005/04/26 10:26
L24	6	7 and 23	US-PGPUB; USPAT	OR	ON	2005/04/26 10:26
L26	41	L7 and ird	US-PGPUB; USPAT; EPO; JPO; DERWENT	OR	ON	2005/04/26 10:26
L27	2	20 and 26	US-PGPUB; USPAT; EPO; JPO; DERWENT	OR	ON	2005/04/26 10:26

L28	16717	signal with combiner	US-PGPUB; USPAT; EPO; JPO; DERWENT	OR	ON	2005/04/26 10:27
L29	2890	broadcast and L28	US-PGPUB; USPAT; EPO; JPO; DERWENT	OR	ON	2005/04/26 10:27
L30	58	L29 and lnb	US-PGPUB; USPAT; EPO; JPO; DERWENT	OR	ON	2005/04/26 10:27
L31	8	20 and 30	US-PGPUB; USPAT; EPO; JPO; DERWENT	OR	ON	2005/04/26 10:27
L32	96	lnb and (frequency with transla$4)	US-PGPUB; USPAT; EPO; JPO; DERWENT	OR	ON	2005/04/26 10:27
L33	17	20 and 32	US-PGPUB; USPAT; EPO; JPO; DERWENT	OR	ON	2005/04/26 10:29
L34	576	725/64,71,78,98,118.ccls.	US-PGPUB; USPAT; EPO; JPO; DERWENT	OR	ON	2005/04/26 10:30
L35	40	25 and 34	US-PGPUB; USPAT; EPO; JPO; DERWENT	OR	ON	2005/04/26 10:30
L36	7	26 and 34	US-PGPUB; USPAT; EPO; JPO; DERWENT	OR	ON	2005/04/26 10:30
L37	12	30 and 34	US-PGPUB; USPAT; EPO; JPO; DERWENT	OR	ON	2005/04/26 10:30
L38	6	32 and 34	US-PGPUB; USPAT; EPO; JPO; DERWENT	OR	ON	2005/04/26 10:30
S17	1837	odu or outdoor adj unit	US-PGPUB; USPAT	OR	ON	2005/04/26 10:25
S18	6492	selector same combi$3	US-PGPUB; USPAT	OR	ON	2005/04/11 09:21
S20	15	S17 and S18	US-PGPUB; USPAT	OR	ON	2005/04/11 09:21

S21	9331	odu or outdoor adj unit	US-PGPUB; USPAT; EPO; JPO; DERWENT	OR	ON	2005/04/11 09:21
S22	7980	selector same combi$3	US-PGPUB; USPAT; EPO; JPO; DERWENT	OR	ON	2005/04/11 09:21
S24	15	S21 and S22	US-PGPUB; USPAT; EPO; JPO; DERWENT	OR	ON	2005/04/11 10:31
S25	16	ODU same IRD same distribution	US-PGPUB; USPAT; EPO; JPO; DERWENT	OR	ON	2005/04/19 08:57
S36	17	ODU same IRD same distribution	US-PGPUB; USPAT; EPO; JPO; DERWENT	OR	ON	2005/04/19 08:58
S37	4	S36 and combiner	US-PGPUB; USPAT; EPO; JPO; DERWENT	OR	ON	2005/04/19 08:59
S42	1181	broadcast with signal with distribution	US-PGPUB; USPAT; EPO; JPO; DERWENT	OR	ON	2005/04/26 10:26
S43	11	S42 and odu	US-PGPUB; USPAT; EPO; JPO; DERWENT	OR	ON	2005/04/19 09:22
S44	41	S42 and ird	US-PGPUB; USPAT; EPO; JPO; DERWENT	OR	ON	2005/04/26 10:26
S45	8	S44 and odu	US-PGPUB; USPAT; EPO; JPO; DERWENT	OR	ON	2005/04/19 10:07
S46	5	S45 and filter	US-PGPUB; USPAT; EPO; JPO; DERWENT	OR	ON	2005/04/19 09:23
S52	17	lnb same odu same ird and broadcast	US-PGPUB; USPAT; EPO; JPO; DERWENT	OR	ON	2005/04/20 09:36

S56	15512	plurality same broadcast	US-PGPUB; USPAT; EPO; JPO; DERWENT	OR	ON	2005/04/20 09:42
S57	14	S56 and (lnb same odu same ird)	US-PGPUB; USPAT; EPO; JPO; DERWENT	OR	ON	2005/04/20 09:43

UNITED STATES PATENT AND TRADEMARK OFFICE

UNITED STATES DEPARTMENT OF COMMERCE
United States Patent and Trademark Office
Address: COMMISSIONER FOR PATENTS
P.O. Box 1450
Alexandria, Virginia 22313-1450
www.uspto.gov

APPLICATION NO.	FILING DATE	FIRST NAMED INVENTOR	ATTORNEY DOCKET NO.	CONFIRMATION NO.
10/289,011	11/06/2002	Itzhak Gurantz	9226	9030

24244 7590 06/09/2005
MICHAEL W LANDRY
5098 SEACHASE STREET
SAN DIEGO, CA 92130

EXAMINER
SHARMA, SUJATHA R

ART UNIT	PAPER NUMBER
2684	

DATE MAILED: 06/09/2005

Please find below and/or attached an Office communication concerning this application or proceeding.

PTO-90C (Rev. 10/03)

Office Action Summary	Application No.	Applicant(s)	
	10/289,011	GURANTZ ET AL.	
	Examiner	Art Unit	
	Sujatha Sharma	2684	

-- The MAILING DATE of this communication appears on the cover sheet with the correspondence address --

Period for Reply

A SHORTENED STATUTORY PERIOD FOR REPLY IS SET TO EXPIRE 3 MONTH(S) FROM THE MAILING DATE OF THIS COMMUNICATION.

- Extensions of time may be available under the provisions of 37 CFR 1.136(a). In no event, however, may a reply be timely filed after SIX (6) MONTHS from the mailing date of this communication.
- If the period for reply specified above is less than thirty (30) days, a reply within the statutory minimum of thirty (30) days will be considered timely.
- If NO period for reply is specified above, the maximum statutory period will apply and will expire SIX (6) MONTHS from the mailing date of this communication.
- Failure to reply within the set or extended period for reply will, by statute, cause the application to become ABANDONED (35 U.S.C. § 133). Any reply received by the Office later than three months after the mailing date of this communication, even if timely filed, may reduce any earned patent term adjustment. See 37 CFR 1.704(b).

Status

1)☒ Responsive to communication(s) filed on 27 December 2002.

2a)☐ This action is **FINAL**. 2b)☒ This action is non-final.

3)☐ Since this application is in condition for allowance except for formal matters, prosecution as to the merits is closed in accordance with the practice under *Ex parte Quayle*, 1935 C.D. 11, 453 O.G. 213.

Disposition of Claims

4)☒ Claim(s) 1-23 is/are pending in the application.

4a) Of the above claim(s) _____ is/are withdrawn from consideration.

5)☐ Claim(s) _____ is/are allowed.

6)☒ Claim(s) 1-23 is/are rejected.

7)☐ Claim(s) _____ is/are objected to.

8)☐ Claim(s) _____ are subject to restriction and/or election requirement.

Application Papers

9)☐ The specification is objected to by the Examiner.

10)☐ The drawing(s) filed on _____ is/are: a)☐ accepted or b)☐ objected to by the Examiner.

Applicant may not request that any objection to the drawing(s) be held in abeyance. See 37 CFR 1.85(a).

Replacement drawing sheet(s) including the correction is required if the drawing(s) is objected to. See 37 CFR 1.121(d).

11)☐ The oath or declaration is objected to by the Examiner. Note the attached Office Action or form PTO-152.

Priority under 35 U.S.C. § 119

12)☐ Acknowledgment is made of a claim for foreign priority under 35 U.S.C. § 119(a)-(d) or (f).

a)☐ All b)☐ Some * c)☐ None of:

1.☐ Certified copies of the priority documents have been received.

2.☐ Certified copies of the priority documents have been received in Application No. _____.

3.☐ Copies of the certified copies of the priority documents have been received in this National Stage application from the International Bureau (PCT Rule 17.2(a)).

* See the attached detailed Office action for a list of the certified copies not received.

Attachment(s)

1) ☒ Notice of References Cited (PTO-892)
2) ☐ Notice of Draftsperson's Patent Drawing Review (PTO-948)
3) ☐ Information Disclosure Statement(s) (PTO-1449 or PTO/SB/08) Paper No(s)/Mail Date _____.
4) ☐ Interview Summary (PTO-413) Paper No(s)/Mail Date. _____ .
5) ☐ Notice of Informal Patent Application (PTO-152)
6) ☐ Other: _____.

DETAILED ACTION

Claim Rejections - 35 USC § 102

1. The following is a quotation of the appropriate paragraphs of 35 U.S.C. 102 that form the basis for the rejections under this section made in this Office action:

> A person shall be entitled to a patent unless –
>
> (e) the invention was described in (1) an application for patent, published under section 122(b), by another filed in the United States before the invention by the applicant for patent or (2) a patent granted on an application for patent by another filed in the United States before the invention by the applicant for patent, except that an international application filed under the treaty defined in section 351(a) shall have the effects for purposes of this subsection of an application filed in the United States only if the international application designated the United States and was published under Article 21(2) of such treaty in the English language.

2. Claim 1-9,11-23 is rejected under 35 U.S.C. 102(e) as being anticipated by Williams [US 6,493,873].

Regarding claim 1, Williams discloses a system for redistributing broadband content to a multiplicity of receiver units. Williams further discloses:

- a signal selector that receives a plurality of wideband signals comprising a plurality of narrowband signals and selects at least one narrowband signal from at least one wideband signal; see col. 3, line 56 – col. 4, line 33, col. 5, line 45 – col. 6, line 9, Figs. 1,3
- a frequency translator coupled to the signal selector that is capable of shifting the selected narrowband signal to a predetermined carrier frequency to produce an RF signal; see col. 3, line 56 – col. 4, line 33, col. 6, lines 12-21, col. 9, lines 40-48, Figs. 1,3
- a signal combiner coupled to at least one frequency translator capable of combining at least two RF signals to produce a composite signal; see col. 3, line 56 – col. 4, line 33, col. 10, lines 24-39, Figs. 1,3

whereby the composite signal is transmitted to the receiver. See figs. 1,3.

Regarding claim 2, Williams discloses a signal distribution wherein the communication channel is a single cable connected between the signal selector and the receiver. See 26 in Fig.1 and col. 10, lines 24-39.

Regarding claim 3, Williams further discloses a signal distribution system wherein the signal selector comprises an analog to digital converter and a digital filter. See col. 17, lines 5-63.

Regarding claim 4, Williams discloses a signal distribution system wherein the signal selector comprises a tuner. See 54 in Fig.3.

Regarding claim 5, Williams further discloses a signal distribution system wherein the signal selector is responsive to channel select information transmitted by a receiving unit. See col. 4, line 61 – col. 5, line 5.

Regarding claim 6, Williams discloses a signal distribution system wherein channel select information is transmitted over the same cable as the composite signal. See 26 in fig. 1.

Regarding claim 7, Williams further discloses a signal distribution system wherein channel select information is transmitted over a wireless link. See col. 6, lines 27-34.

Regarding claim 8, Williams discloses signal distribution system for distributing signals comprising a plurality of channels from a plurality of sources between a first unit and a second unit over a communication medium comprising:

- means in the first unit for selecting channels from a plurality of sources and combining the selected channels into a composite signal and transmitting the composite signal over the medium and means in the second unit for receiving the composite signal; see col. 3, line 56 – col. 4, line 33, col. 10, lines 24-39, Figs. 1,3
- means in the first unit and second units for bi-directionally communicating control information between both units. See col. 4, line 61 – col. 5, line 5, col. 10, line 53 – col. 11, line 67

Regarding claim 9, Williams further discloses a signal distribution system wherein the control information comprises channel selection requests originating from the second unit and the control information comprises channel mapping information originating from the first unit. See col. 10, line 53 – col. 11, line 67.

Regarding claim 11, Williams further discloses a signal distribution system wherein the first unit is a satellite outdoor unit (14/16 in fig. 1) and the second unit is a satellite integrated receiver decoder unit (30,32,34,36,38 in fig.1).

Regarding claim 12, Williams further discloses a signal distribution system wherein the communication medium is a coaxial cable connected to the satellite outdoor unit. See 26 in Fig.1 and col. 10, lines 24-39.

Regarding claim 13, Williams further discloses signal distribution system of claim 12 wherein the means for bi-directional communicating uses the same communication medium as the composite signal. See 26 in Fig.1, col. 4, line 61 – col. 5, line 5, col. 10, line 53 – col. 11, line 67.

Regarding claim 14, Williams discloses a method of communicating a plurality of transponder signals from a satellite outdoor unit (ODU) to integrated receiver decoders (IRDs) over a single cable connected to the ODU, the method comprising the steps of:

- communicating a transponder request signal to the ODU; See Fig.1, 3 and col. 4, line 61 – col. 5, line 5
- in the ODU, selecting a transponder signal responsive to the transponder request signal and combining selected transponder signals into a composite signal; see col. 4, lines 4-39
- transmitting the composite signal over the single cable from the ODU to IRDs. See 26 in Fig.1

Regarding claim 15, Williams further discloses a method wherein the step of selecting a transponder signal comprises the step of filtering a transponder signal with a band pass filter

having a bandwidth substantially wider than the bandwidth of the transponder signal. See col. 5, line 59 – col. 4, line 11.

Regarding claims 16,17 Williams discloses a method further comprising frequency translating the selected transponder channels before combining. See col. 3, line 56 – col. 4, line 33, col. 6, lines 12-21, col. 9, lines 40-48, Figs. 1,3.

Regarding claim 18, Williams further discloses a method further comprising the step of splitting the composite signal inside a home and distributing to a plurality of IRDs. See col. 1, lines 13-18 and col. 3, lines 50-67

Regarding claim 19, Williams further discloses a method wherein the transponder request signal is transmitted over the cable from an IRD. See 26 in Fig.1, and col. 4, line 61 – col. 5, line 5

Regarding claim 20, Williams discloses a method wherein the transponder request signal is transmitted over a wireless link to the ODU. See col. 6, lines 27-34.

Regarding claim 21, Williams further discloses a method comprising the steps of:

- frequency translating the selected transponder channels to a predetermined frequency before combining; . See col. 3, line 56 – col. 4, line 33, col. 6, lines 12-21, col. 9, lines 40-48, Figs. 1,3.

- splitting the composite signal inside a home and distributing to a plurality of IRDs. See col. 1, lines 13-18 and col. 3, lines 50-67

Regarding claim 22, Williams further discloses a method wherein the transponder request signal is transmitted over the cable from an IRD. See 26 in Fig.1, and col. 4, line 61 – col. 5, line 5

Regarding claim 23, Williams further discloses a method wherein the transponder request signal is transmitted over a wireless link to the ODU. See col. 6, lines 27-34.

Claim Rejections - 35 USC § 103

3. The following is a quotation of 35 U.S.C. 103(a) which forms the basis for all obviousness rejections set forth in this Office action:

> (a) A patent may not be obtained though the invention is not identically disclosed or described as set forth in section 102 of this title, if the differences between the subject matter sought to be patented and the prior art are such that the subject matter as a whole would have been obvious at the time the invention was made to a person having ordinary skill in the art to which said subject matter pertains. Patentability shall not be negatived by the manner in which the invention was made.

4. Claim 10 is rejected under 35 U.S.C. 103(a) as being unpatentable over Williams [US 6,493,873] in view of Sao [US 6,437,837].

Regarding claim 10, Williams discloses all the limitations as claimed. However he does not disclose a method wherein the signal distribution system further comprises means for carrier offset correction.

Sao, in the same filed of endeavor, teaches a broadcast signal processing apparatus and a method in which channel interference by analog broadcast is prevented by correcting the frequency offset of the broadcast signal. See col. 2, line 10 – col. 3, line 25.

Therefore it would have been obvious to one with ordinary skill in the art at the time the invention was made to provide the above teachings of Seo to Williams in order to effectively prevent a co-channel interference thus reducing noise and improving the quality of the received signal.

Conclusion

5. The prior art made of record and not relied upon is considered pertinent to applicant's disclosure.

Davis [US 6,600,730]	System for distribution of satellite signals from separate multiple satellites on a single cable line
Armstrong [US 2003/0115608]	Signal distribution method and apparatus
Coutiho [US 5,760,822]	Central node converter for local network having single coaxial cable
El Wardani [US 2003/0031191]	Broadband network bridging various wiring channels
James [US 2004/0060065]	Direct broadcast signal distribution method
Merio [US 2004/0058642]	Satellite reception
Bargroff [US 2005/0005296]	NXM Crosspoint switch with band translation

Any inquiry concerning this communication or earlier communications from the examiner should be directed to Sujatha Sharma whose telephone number is 571-272-7886. The examiner can normally be reached on Mon-Fri 7.30am - 4.00pm.

If attempts to reach the examiner by telephone are unsuccessful, the examiner's supervisor, Nay Maung can be reached on 571-272-7882. The fax phone number for the organization where this application or proceeding is assigned is 703-872-9306.

Information regarding the status of an application may be obtained from the Patent Application Information Retrieval (PAIR) system. Status information for published applications may be obtained from either Private PAIR or Public PAIR. Status information for unpublished applications is available through Private PAIR only. For more information about the PAIR system, see http://pair-direct.uspto.gov. Should you have questions on access to the Private PAIR system, contact the Electronic Business Center (EBC) at 866-217-9197 (toll-free).

Sujatha Sharma
April 26, 2005

NAY MAUNG
SUPERVISORY PATENT EXAMINER

Notice of References Cited	Application/Control No. 10/289,011	Applicant(s)/Patent Under Reexamination GURANTZ ET AL.	
	Examiner Sujatha Sharma	Art Unit 2684	Page 1 of 1

U.S. PATENT DOCUMENTS

*		Document Number Country Code-Number-Kind Code	Date MM-YYYY	Name	Classification
	A	US-2004/0058642	03-2004	Merio, Lauri	455/003.02
	B	US-2005/0005296	01-2005	Bargroff et al.	725/063
	C	US-2004/0060065	03-2004	James et al.	725/071
	D	US-2003/0031191	02-2003	El Wardani et al.	370/401
	E	US-5,760,822	06-1998	Coutinho, Roy S.	348/121
	F	US-2003/0115608	06-2003	ARMSTRONG et al.	725/78
	G	US-6,600,730	07-2003	Davis et al.	370/343
	H	US-6,437,837	08-2002	Seo, Young-joo	348/735
	I	US-6,493,873	12-2002	Williams, Jim C.	725/78
	J	US-			
	K	US-			
	L	US-			
	M	US-			

FOREIGN PATENT DOCUMENTS

*		Document Number Country Code-Number-Kind Code	Date MM-YYYY	Country	Name	Classification
	N					
	O					
	P					
	Q					
	R					
	S					
	T					

NON-PATENT DOCUMENTS

*		Include as applicable: Author, Title Date, Publisher, Edition or Volume, Pertinent Pages)
	U	
	V	
	W	
	X	

*A copy of this reference is not being furnished with this Office action. (See MPEP § 707.05(a).)
Dates in MM-YYYY format are publication dates. Classifications may be US or foreign.

Index of Claims	Application No.	Applicant(s)
	10/289,011	GURANTZ ET AL.
	Examiner	Art Unit
	Sujatha Sharma	2684

√	Rejected	–	(Through numeral) Cancelled	N	Non-Elected	A	Appeal
=	Allowed	÷	Restricted	I	Interference	O	Objected

Claim Final	Claim Original	Date 4/26/05							
	1	↑							
	2								
	3								
	4								
	5								
	6								
	7								
	8								
	9								
	10								
	11								
	12								
	13								
	14								
	15								
	16								
	17								
	18								
	19								
	20								
	21								
	22								
	23	↓							
	24								
	25								
	26								
	27								
	28								
	29								
	30								
	31								
	32								
	33								
	34								
	35								
	36								
	37								
	38								
	39								
	40								
	41								
	42								
	43								
	44								
	45								
	46								
	47								
	48								
	49								
	50								

Claim Final	Claim Original	Date							
	51								
	52								
	53								
	54								
	55								
	56								
	57								
	58								
	59								
	60								
	61								
	62								
	63								
	64								
	65								
	66								
	67								
	68								
	69								
	70								
	71								
	72								
	73								
	74								
	75								
	76								
	77								
	78								
	79								
	80								
	81								
	82								
	83								
	84								
	85								
	86								
	87								
	88								
	89								
	90								
	91								
	92								
	93								
	94								
	95								
	96								
	97								
	98								
	99								
	100								

Claim Final	Claim Original	Date							
	101								
	102								
	103								
	104								
	105								
	106								
	107								
	108								
	109								
	110								
	111								
	112								
	113								
	114								
	115								
	116								
	117								
	118								
	119								
	120								
	121								
	122								
	123								
	124								
	125								
	126								
	127								
	128								
	129								
	130								
	131								
	132								
	133								
	134								
	135								
	136								
	137								
	138								
	139								
	140								
	141								
	142								
	143								
	144								
	145								
	146								
	147								
	148								
	149								
	150								

UNITED STATES PATENT AND TRADEMARK OFFICE

Commissioner for Patents
Washington, DC 20231
www.uspto.gov

Bib Data Sheet

CONFIRMATION NO. 9030

SERIAL NUMBER	FILING DATE	CLASS	GROUP ART UNIT	ATTORNEY DOCKET NO.
10/289,011	11/06/2002 RULE	704	2681	9226

APPLICANTS

Itzhak Gurantz, San Diego, CA;
Ladd El Wardani, La Jolla, CA;
Michael Landry, San Diego, CA;

** CONTINUING DATA *************************

This appln claims benefit of 60/345,965 11/07/2001
and claims benefit of 60/333,722 11/27/2001
and claims benefit of 60/358,817 02/22/2002

** FOREIGN APPLICATIONS ***********

IF REQUIRED, FOREIGN FILING LICENSE GRANTED ** SMALL ENTITY **
** 12/12/2002

	STATE OR COUNTRY	SHEETS DRAWING	TOTAL CLAIMS	INDEPENDENT CLAIMS
Foreign Priority claimed ☐ yes ☒ no 35 USC 119 (a-d) conditions met ☐ yes ☐ no ☐ Met after Allowance Verified and Acknowledged ____ Examiner's Signature ____ Initials	CA	17	23	3

ADDRESS

24244

TITLE

Signal selector and combiner for broadband content distribution

FILING FEE RECEIVED		
462	FEES: Authority has been given in Paper No. ________ to charge/credit DEPOSIT ACCOUNT No. ________ for following:	☐ All Fees ☐ 1.16 Fees (Filing) ☐ 1.17 Fees (Processing Ext. of time) ☐ 1.18 Fees (Issue) ☐ Other ________ ☐ Credit

Search Notes	Application No.	Applicant(s)
	10/289,011	GURANTZ ET AL.
	Examiner: Sujatha Sharma	Art Unit: 2684

SEARCHED

Class	Subclass	Date	Examiner
455	3.01-3.05, 103, 137, 12.1, 20	4/26/05	SS
455	427	4/26/05	SS
725	64, 71, 78, 98	4/26/05	SS
725	118	4/26/05	SS

INTERFERENCE SEARCHED

Class	Subclass	Date	Examiner

SEARCH NOTES (INCLUDING SEARCH STRATEGY)

	DATE	EXMR
Eliseo Ramos	4/19/05	SS

TFW 2684

PTO/SB/21 (09-04)
Approved for use through 07/31/2006. OMB 0651-0031
U.S. Patent and Trademark Office; U.S. DEPARTMENT OF COMMERCE
Under the Paperwork Reduction Act of 1995, no persons are required to respond to a collection of information unless it displays a valid OMB control number.

OIPE JC
AUG 1 1 2005
PATENT & TRADEMARK OFFICE

TRANSMITTAL FORM

(to be used for all correspondence after initial filing)

Total Number of Pages in This Submission	14	Application Number	10/289,011
		Filing Date	11/06/2002
		First Named Inventor	Gurantz
		Art Unit	2684
		Examiner Name	Sujatha R Sharma
		Attorney Docket Number	9226

ENCLOSURES (Check all that apply)

- [ ] Fee Transmittal Form
  - [ ] Fee Attached
- [x] Amendment/Reply
  - [ ] After Final
  - [ ] Affidavits/declaration(s)
- [ ] Extension of Time Request
- [ ] Express Abandonment Request
- [ ] Information Disclosure Statement
- [ ] Certified Copy of Priority Document(s)
- [ ] Reply to Missing Parts/, Incomplete Application
  - [ ] Reply to Missing Parts under 37 CFR 1.52 or 1.53
- [ ] Drawing(s)
- [ ] Licensing-related Papers
- [ ] Petition
- [ ] Petition to Convert to a Provisional Application
- [ ] Power of Attorney, Revocation Change of Correspondence Address
- [ ] Terminal Disclaimer
- [ ] Request for Refund
- [ ] CD, Number of CD(s) _____
  - [ ] Landscape Table on CD
- [ ] After Allowance Communication to TC
- [ ] Appeal Communication to Board of Appeals and Interferences
- [ ] Appeal Communication to TC **(Appeal Notice, Brief, Reply Brief)**
- [ ] Proprietary Information
- [ ] Status Letter
- [x] Other Enclosure(s) (please Identify below):

Remarks

Reply postcard

Interview Request form

SIGNATURE OF APPLICANT, ATTORNEY, OR AGENT

Firm Name	Law Office of Michael W. Landry		
Signature	Michael W. Landry		
Printed name	Michael W. Landry		
Date	8/9/2005	Reg. No.	38,216

CERTIFICATE OF TRANSMISSION/MAILING

I hereby certify that this correspondence is being facsimile transmitted to the USPTO or deposited with the United States Postal Service with sufficient postage as first class mail in an envelope addressed to: Commissioner for Patents, P.O. Box 1450, Alexandria, VA 22313-1450 on the date shown below:

Signature	Michael W. Landry		
Typed or printed name	Michael W. Landry	Date	8/9/2005

This collection of information is required by 37 CFR 1.5. The information is required to obtain or retain a benefit by the public which is to file (and by the USPTO to process) an application. Confidentiality is governed by 35 U.S.C. 122 and 37 CFR 1.11 and1.14. This collection is estimated to 2 hours to complete, including gathering, preparing, and submitting the completed application form to the USPTO. Time will vary depending upon the individual case. Any comments on the amount of time you require to complete this form and/or suggestions for reducing this burden, should be sent to the Chief Information Officer, U.S. Patent and Trademark Office, U.S. Department of Commerce, P.O. Box 1450, Alexandria, VA 22313-1450. DO NOT SEND FEES OR COMPLETED FORMS TO THIS ADDRESS. **SEND TO: Commissioner for Patents, P.O. Box 1450, Alexandria, VA 22313-1450.**

If you need assistance in completing the form, call 1-800-PTO-9199 and select option 2.

OIPE JC194
AUG 11 2005
PATENT & TRADEMARK OFFICE

IN THE UNITED STATES PATENT AND TRADEMARK OFFICE

Application No:	10/289,011
Filed:	11/06/2002
Applicant:	Gurantz et al.
Title:	Signal selector and combiner for broadband content distribution
Examiner/GAU:	Sujatha R Sharma / 2684

Date: 8/9/2005

Amendment

Mail Stop Amendment
Commissioner for Patents
P.O. Box 1450
Alexandria VA 22313-1450

Dear Sir:

In response to the Office Action mailed 6/9/2005, please amend the above application as follows:

Claim amendments starting on page 2.

Remarks and arguments starting on page 6.

Certificate of Mailing

I hereby certify that this correspondence is being deposited with the United States Postal Service with sufficient postage as first class mail in an envelope addressed to:

Commissioner for Patents
P.O. Box 1450
Alexandria, VA 22313-1450

Date: 8/9/05

Signed: Michael W. Landry

Name: Michael W. Landry

Claim Amendments:

1. (Currently amended) A signal distribution system for distributing a plurality of low noise amplifier and block converter (LNB) signals over a communication channel to a receiver comprising:

a signal selector that receives a plurality of ~~wideband~~ broadband LNB signals comprising a plurality of ~~narrowband~~ transponder signals and selects at least one ~~narrowband~~ transponder signal from at least one ~~wideband~~ broadband LNB signal;

a frequency translator coupled to the signal selector that is capable of shifting the selected ~~narrowband~~ transponder signal to a predetermined carrier frequency to produce an RF signal; and

a signal combiner coupled to at least one frequency translator capable of combining at least two RF signals to produce a composite signal;

wherein the modulation of the composite signal is the same as the modulation of the broadband LNB signals;

whereby the composite signal is transmitted to the receiver.

2. (Original) The signal distribution system of claim 1 wherein the communication channel is a single cable connected between the signal selector and the receiver.

3. (Original) The signal distribution system of claim 1 wherein the signal selector comprises an analog to digital converter and a digital filter.

4. (Original) The signal distribution system of claim 1 wherein the signal selector comprises a tuner.

5. (Original) The signal distribution system of claim 1 wherein the signal selector is responsive to channel select information transmitted by a receiving unit.

6. (Original) The signal distribution system of claim 5 wherein channel select information is transmitted over the same cable as the composite signal.

7. (Original) The signal distribution system of claim 5 wherein channel select information is transmitted over a wireless link.

8. (Amended) A signal distribution system for distributing signals comprising a plurality of channels from a plurality of sources between a first unit and a second unit over a communication medium comprising:

means in the first unit for selecting channels from a plurality of sources and combining the selected channels into a composite signal <u>without demodulating channels and without changing the modulation of the channels</u> and transmitting the composite signal over the medium; and

means in the second unit for receiving the composite signal <u>and demodulating and decoding at least one channel</u>; and

means in the first unit and second units for bi-directionally communicating control information between both units.

9. (Original) The signal distribution system of claim 8 wherein the control information comprises channel selection requests originating from the second unit and the control information comprises channel mapping information originating from the first unit.

10. (Original) The signal distribution system of claim 8, further comprising a means for carrier offset correction.

11. (Original) The signal distribution system of claim 8 wherein the first unit is a satellite outdoor unit and the second unit is a satellite integrated receiver decoder unit.

12. (Original) The signal distribution system of claim 11 wherein the communication medium is a coaxial cable connected to the satellite outdoor unit.

13. (Original) The signal distribution system of claim 12 wherein the means for bi-directional communicating uses the same communication medium as the composite signal.

14. (Currently amended) A method of communicating a plurality of transponder signals from a satellite outdoor unit (ODU) to integrated receiver decoders (IRDs) over a single cable connected to the ODU, the method comprising the steps of:

communicating a transponder request signal to the ODU;

in the ODU, selecting a transponder signal responsive to the transponder request signal;

combining selected transponder signals into a composite signal;

transmitting the composite signal over the single cable from the ODU to IRDs, wherein the modulation of the transponder signal is not altered by the steps of selecting, combining, and transmitting.

15. (Currently amended) The method of claim 14 wherein the step of selecting a transponder signal comprises the step of: filtering a transponder signal with a band pass filter having a bandwidth ~~substantially~~ ranging from 5% to 100% wider than the bandwidth of the transponder signal.

16. (Original) The method of claim 14 further comprising frequency translating the selected transponder channels before combining.

17. (Currently amended) The method of claim [[14]] 15 further comprising frequency translating the selected transponder channels to a predetermined frequency before combining.

18. (Original) The method of claim 14 further comprising the step of splitting the composite signal inside a home and distributing to a plurality of IRDs.

19. (Original) The method of claim 14 wherein the transponder request signal is transmitted over the cable from an IRD.

20. (Original) The method of claim 14 wherein the transponder request signal is transmitted over a wireless link to the ODU.

21. (Original) The method of claim 14 further comprising the steps of:

frequency translating the selected transponder channels to a predetermined frequency before combining; and

splitting the composite signal inside a home and distributing to a plurality of IRDs.

22. (Original) The method of claim 21 wherein the transponder request signal is transmitted over the cable from an IRD.

23. (Original) The method of claim 21 wherein the transponder request signal is transmitted over a wireless link to the ODU.

Remarks/Arguments

Each of the cited references has been reviewed and the rejections made to the claims have been considered.

Claims

Claims 1-23 remain in the application. Claims 1, 8, 14, 15, and 17 are amended. Reconsideration of the rejections is respectfully requested in view of the amendments and the following arguments.

Rejections under 35 U.S.C. 102

The Examiner has rejected claims 1 through 23, except claim 10, under 35 U.S.C. 102 as being anticipated by Williams (U.S. 6,493,873). Williams discloses a system for redistributing broadband audio-visual-data signals to a multiplicity of receiver units within a multiple dwelling unit by employing a transmodulator device that accepts the broadband satellite signal transmitted to the ground using QPSK modulation and coverts the QPSK signal to a smaller bandwidth QAM signal for transmission over the building cable wiring. The two-level QPSK signal is demodulated and decoded to bit-level data, then encoded and modulated to convert the data to a multi-level QAM signal to reduce the bandwidth of the transponder signal. The resulting transmodulated signal is transmitted to receiver units over the building cable wiring wherein each transponder channel is transmitted in 6 MHz channels. (Williams, col. 3 line 57-64; col. 4, line 9-10; col. 4, line 57-60; col. 6, line 23-25; col. 7, line 5-9)

An important distinction between applicant's invention and the Williams reference is that Williams uses transmodulation where the applicant's invention does not transmodulate, but instead applicant's invention selects transponder channels and combines the selected transponder signals using the original modulation of the transmission from the satellite. This distinction is important because the original satellite transmission is more robust than QAM signaling for distribution over cable wiring. QAM signaling requires higher signal to noise ratio (SNR) than QPSK and is more susceptible to impairment from multipath present in a cable environment, as identified by applicant on page 3, lines 8-12. As shown in Figs. 3, 4, and 6 of Williams, Williams receives, then decodes to packets (col. 6, line), then encodes again as an integral part of the transmodulation. The decoding performs error detection or

error correction, the encoding applies new error correction coding (R-S encoder 92, col. 13, line 63 to col. 14, line 25). Because applicant's invention selects and combines the original satellite signal without demodulation and without altering the modulation, the extra steps in Williams of decoding and re-encoding in the selector and combiner is avoided. The transmodulation approach of Williams does not anticipate the simpler and more robust approach of the present invention for selecting, combining, and distributing satellite signals to integrated receiver decoders (IRDs). The Williams invention is targeted to multiple-dwelling units, such as an apartment complex, where many subscribers receive service and the cost of a complex approach is spread among many users. The complex approach chosen by Williams employs significantly more hardware than the simpler approach of applicant's invention, which is targeted to a home installation. Due to the complexity, size, and power consumption of the Williams approach, it is not suitable for installation in the outdoor unit (ODU), where applicant's invention is installed in the outdoor unit.

Another consequence of the Williams approach is that standard satellite receiver boxes (IRDs) designed to receive QPSK are not used, but instead IRDs capable of receiving the transmodulated QAM signal is required, specifically a cable system set-top-box. (col. 16, line 24-30). In Williams, the signal is transmitted over a cable plant, which has signal bandwidth constraints that require the transmodulation to narrower bandwidths to fit the satellite signals. The applicant's invention allows the use of the standard satellite intermediate-frequency (IF) frequency band for distribution from the ODU to the IRD and standard IRD hardware that is designed to accept QPSK modulated transponder signals. See application page 10 lines 15-18; page 17 line 30 to page 18 line 2. According to the claims presented, decoding of transponder signals is not performed in the signal selector and combiner. Decoding of the transponder signals is performed only in the IRDs.

The "broadband" signal in Williams is a QPSK modulated transponder signal and the "reduced-in-bandwidth" or "smaller" bandwidth signal is a QAM modulated signal after transmodulating the broadband transponder signal. The broadband and reduced-in-bandwidth terms in Williams pertain to the signal bandwidth before and after transmodulation. There is no transmodulation in applicant's invention. A transponder signal in applicant's invention is selected and combined without altering the modulation.

Claim 1 has been amended to incorporate the term broadband LNB signal to clarify the distinction that the broadband LNB signal is the full LNB output comprising many transponder channels; and amended claim 1 uses the term transponder signal to clarify that the selected signal is a transponder signal, a subset of the full broadband LNB signal. Support for the term broadband is found in the original specification, including at page 7 line 21, page 16 line 7, and in the abstract, page 23 line 1 and 6. Support for the term transponder is found in the original specification, including at page 4 line 1-6 and page 16 line10.

Claim 1 is further amended to clarify that the modulation of transponder channels is not changed in the process of selecting and combining by including the limitation wherein the modulation of the composite signal is the same as the modulation of the broadband LNB signals. This continuity in the modulation is distinct from Williams where the modulation is changed to reduce the bandwidth of the transponder signals.

Applicant believes that Claim 1, as amended, is patentable over William and allowance is respectfully requested.

Regarding claim 2, in light of the amendments and arguments of claim 1 upon which this claim depends, claim 2 should be allowable.

Regarding claim 3, the disclosure in Williams cited by the examiner (col. 17, lines 5-63) discloses decoding of transport data and MPEG video. The digital to analog converter at col. 17 line 57 is different from the analog to digital converter of the present invention. The D/A converter of Williams is used to reconstruct audio signals. The A/D converter of the applicant's invention is for sampling the transponder signals and the digital filter is for selecting a transponder signal. In Williams, digital filtering does not appear to be disclosed in the cited section, however, any filter implicit in this section is for purposes of processing the MPEG or NTSC video and reconstructed audio, not for the purpose of signal selecting as in the applicant's invention. In light of these arguments regarding claim 3 and in light of the amendments and arguments of claim 1 upon which this claim depends, claim 3 should be allowable.

Regarding claims 4 through 7, in light of the amendments and arguments of claim 1 upon which these claims depend, claims 4 through 7 should be allowable.

Claim 8 has been amended to expressly recite that the channel selection and combining is performed without demodulating channels and without changing the modulation of the channels. Further, claim 8 has been amended to include the limitation that demodulating and decoding at least one channel is performed in the second unit, not the first unit, as in Williams, where the selecting and combining is performed. Applicant believes that Claim 8, as amended, is patentable over William and allowance is respectfully requested.

Regarding claims 9, 11, 12 and 13, in light of the amendments to claim 8 upon which these claims depend, claim 9, 11, 12, and 13 should be allowable. Additionally, regarding claim 11, the transmodulator unit of Williams, where signal selecting and combining takes place, is not located in the outdoor unit (ODU). The limitation of claim 11 requires signal selecting and combining in the ODU, and bi-directional communication with the ODU.

Claim 14 has been amended to expressly recite that the modulation of the transponder signal is not altered by the steps of selecting, combining, and transmitting to clearly distinguish the claim from Williams. In Williams, the modulation is changed by transmodulation from QPSK to QAM. This negative limitation is inherent in the applicant's disclosure of the techniques for selecting, frequency, translating, for example using digital or analog filters or tuners, which do not alter modulation. Referring to MPEP 2173.05(i) Negative Limitations: "Note that a lack of literal basis in the specification for a negative limitation may not be sufficient to establish a prima facie case for lack of descriptive support. Ex parte Parks, 30 USPQ2d 1234, 1236 (Bd. Pat. App. & Inter. 1993)." Additionally, at page 8 line 20-21, the original spectrum is selected and frequency translated.

Selecting a transponder signal in claim 14 is performed in the ODU; in contrast to Williams where selecting is done in the transmodulator.

Claim 15 is amended to include the limitation of the selecting band pass filter having a bandwidth ranging from 5% to 100% wider than the bandwidth of the transponder signal, as supported in the

specification at page 13, line 1-2. The bandpass filtering of Williams is 500 MHz wide and spans all the transponders output from one polarization component of the LNB. Claim 15 as amended should be allowable.

Regarding claims 16, and 18 through 23, in light of the amendments to claim 14 upon which these claims depend, claims 16, and 18 through 23 should be allowable.

Claim 17 is amended to depend on dependant claim 15 and should be allowable along with claim 15.

Rejection under 35 U.S.C. 103(a) of claim 10 is traversed; claim 10 is patentable over Williams in view of Sao.

The Examiner rejected claim 10 under 35 U.S.C. 103(a) as being unpatentable over Williams (U.S. 6,493,873) in view of Sao (U.S. 6,437,837).

Sao discloses an apparatus and method of preventing co-channel interference of an analog television broadcast channel into the processing of a digital television broadcast channel. The disclosure of Sao describes a technique employed in a television receiver by using an NTSC rejection filter (NRF) to reject an analog/NTSC television signal that is transmitted from a distant location at the same channel frequency as a local digital television signal. The NRF is only effective if the frequency offset of the analog transmission is within an allowable error range. The disclosure in Sao describes detecting the carrier offset of the analog broadcast signal then adjusting the local oscillator of the tuner to result in a tuned signal that has the proper frequency alignment in order for the NRF to reject the analog signal. The rejection of the analog signal results in less noise in the digital broadcast signal. The technique of Sao is entirely in the television receiver to remove interference from an analog signal that is co-channel, that is, sharing the same frequency channel with a digital signal.

To establish a prima facie case of obviousness, three basic criteria must be met. First, there must be some suggestion or motivation, either in the references themselves or in the knowledge generally available to one of ordinary skill in the art, to modify the reference or to combine reference teachings. Second, there must be a reasonable expectation of success. Finally, the prior art reference (or

references when combined) must teach or suggest all the claim limitations. The teaching or suggestion to make the claimed combination and the reasonable expectation of success must both be found in the prior art, not in applicant's disclosure. In re Vaeck, 947 F.2d 488, 20 USPQ2d 1438 (Fed. Cir. 1991). See MPEP section 2143.

The carrier offset correction of the present invention is not performed in a television receiver, as disclosed in Sao. The present invention employs carrier offset correction to properly filter the selected signals and to avoid interference with adjacent channels, not co-channel interference as in Sao (application page 11 line 25 to page 12 line 8). There is no suggestion or motivation to modify the teaching of Williams or Sao to incorporate carrier offset correction into a signal selector and combiner. In Williams, there is no need for carrier offset correction because Williams teaches the full demodulation of the received signal, which includes carrier recovery and removal as part of the demodulation process. In Sao, there is no signal selecting and combining operation and no suggestion of application of the teaching of Sao to signal selecting and combining. There would be no expectation of success of applying the teaching of Sao with the teaching of Williams because the techniques of each reference are inapplicable to each other.

Conclusion

In view of the foregoing, claims 1 through 23 as amended are in condition for allowance and such action is respectfully requested.

If it is felt that direct communication would serve to advance prosecution of this case, the examiner is invited to call the attorney at the below listed telephone number.

Date: 8/9/2005

Respectfully submitted,

Michael W. Landry

Michael W. Landry
Attorney for Applicants
Reg. No. 38,216
5098 Seachase St.
San Diego CA 92130
858-229-6801
mlandry@iprsolutions.com

OIPE JC194
AUG 11 2005
PATENT & TRADEMARK OFFICE

PTOL-413A (09-04)
Approved for use through 07/31/2006. OMB 0651-0031
U.S. Patent and Trademark Office: U.S. DEPARTMENT OF COMMERCE

Applicant Initiated Interview Request Form

Application No.: 10/289,011 First Named Applicant: Gurantz
Examiner: Sujatha R Sharma Art Unit: 2684 Status of Application: Pending, non-final rejection

Tentative Participants:
(1) Examiner (2) _____
(3) Applicant's attorney (4) _____

Proposed Date of Interview: As arranged with examiner **Proposed Time:** 8:00 am PST **(AM/PM)**

Type of Interview Requested:
(1) ☑ **Telephonic** (2) ☐ **Personal** (3) ☐ **Video Conference**

Exhibit To Be Shown or Demonstrated: ☐ **YES** ☑ **NO**
If yes, provide brief description: _____

Issues To Be Discussed

Issues (Rej., Obj., etc)	Claims/ Fig. #s	Prior Art	Discussed	Agreed	Not Agreed
(1) Rej.	1-9,11-23	Williams	[ ]	[ ]	[ ]
(2) Rej.	10	Willams/Sao	[ ]	[ ]	[ ]
(3)			[ ]	[ ]	[ ]
(4)			[ ]	[ ]	[ ]

[ ] Continuation Sheet Attached

Brief Description of Arguments to be Presented:

(1) Claims as amended distinguish the invention from Williams and are allowable.

(2) Carrier offset in Sao performed in a television receiver and is different from the carrier offset of claim 10.

An interview was conducted on the above-identified application on _____.
NOTE: This form should be completed by applicant and submitted to the examiner in advance of the interview (see MPEP § 713.01).
This application will not be delayed from issue because of applicant's failure to submit a written record of this interview. Therefore, applicant is advised to file a statement of the substance of this interview (37 CFR 1.133(b)) as soon as possible.

Applicant/Applicant's Representative Signature

Examiner/SPE Signature

Michael W. Landry
Typed/Printed Name of Applicant or Representative

38,216
Registration Number, if applicable

This collection of information is required by 37 CFR 1.133. The information is required to obtain or retain a benefit by the public which is to file (and by the USPTO to process) an application. Confidentiality is governed by 35 U.S.C. 122 and 37 CFR 1.11 and 1.14. This collection is estimated to take 21 minutes to complete, including gathering, preparing, and submitting the completed application form to the USPTO. Time will vary depending upon the individual case. Any comments on the amount of time you require to complete this form and/or suggestions for reducing this burden, should be sent to the Chief Information Officer, U.S. Patent and Trademark Office, U.S. Department of Commerce, P.O. Box 1450, Alexandria, VA 22313-1450. DO NOT SEND FEES OR COMPLETED FORMS TO THIS ADDRESS. SEND TO: Commissioner for Patents, P.O. Box 1450, Alexandria, VA 22313-1450.
If you need assistance in completing the form, call 1-800-PTO-9199 and select option 2.

PATENT APPLICATION FEE DETERMINATION RECORD
Effective October 1, 2001

Application or Docket Number
10/289011
1226

CLAIMS AS FILED - PART I

1.8.14

	(Column 1)	(Column 2)
TOTAL CLAIMS	23	
FOR	NUMBER FILED	NUMBER EXTRA
TOTAL CHARGEABLE CLAIMS	23 minus 20=	* 3
INDEPENDENT CLAIMS	3 minus 3 =	* 0
MULTIPLE DEPENDENT CLAIM PRESENT		☐

* If the difference in column 1 is less than zero, enter "0" in column 2

SMALL ENTITY TYPE ☐ OR OTHER THAN SMALL ENTITY

RATE	FEE		RATE	FEE
BASIC FEE	370.00	OR	BASIC FEE	740.00
X$ 9=	27	OR	X$18=	
X42=	0	OR	X84=	
+140=	0	OR	+280=	
TOTAL	397	OR	TOTAL	

CLAIMS AS AMENDED - PART II

8/11/05

AMENDMENT A

	(Column 1) CLAIMS REMAINING AFTER AMENDMENT		(Column 2) HIGHEST NUMBER PREVIOUSLY PAID FOR	(Column 3) PRESENT EXTRA
Total	* 23	Minus	** 23	= 0
Independent	* 3	Minus	*** 3	= 0
FIRST PRESENTATION OF MULTIPLE DEPENDENT CLAIM				☐

SMALL ENTITY OR OTHER THAN SMALL ENTITY

RATE	ADDITIONAL FEE		RATE	ADDITIONAL FEE
X$ 9=		OR	X$18=	
X42=		OR	X84=	
+140=		OR	+280=	
TOTAL ADDIT. FEE		OR	TOTAL ADDIT. FEE	

AMENDMENT B

	(Column 1) CLAIMS REMAINING AFTER AMENDMENT		(Column 2) HIGHEST NUMBER PREVIOUSLY PAID FOR	(Column 3) PRESENT EXTRA
Total	*	Minus	**	=
Independent	*	Minus	***	=
FIRST PRESENTATION OF MULTIPLE DEPENDENT CLAIM				☐

RATE	ADDITIONAL FEE		RATE	ADDITIONAL FEE
X$ 9=		OR	X$18=	
X42=		OR	X84=	
+140=		OR	+280=	
TOTAL ADDIT. FEE		OR	TOTAL ADDIT. FEE	

AMENDMENT C

	(Column 1) CLAIMS REMAINING AFTER AMENDMENT		(Column 2) HIGHEST NUMBER PREVIOUSLY PAID FOR	(Column 3) PRESENT EXTRA
Total	*	Minus	**	=
Independent	*	Minus	***	=
FIRST PRESENTATION OF MULTIPLE DEPENDENT CLAIM				☐

RATE	ADDITIONAL FEE		RATE	ADDITIONAL FEE
X$ 9=		OR	X$18=	
X42=		OR	X84=	
+140=		OR	+280=	
TOTAL ADDIT. FEE		OR	TOTAL ADDIT. FEE	

* If the entry in column 1 is less than the entry in column 2, write "0" in column 3.
** If the "Highest Number Previously Paid For" IN THIS SPACE is less than 20, enter "20."
***If the "Highest Number Previously Paid For" IN THIS SPACE is less than 3, enter "3."
The "Highest Number Previously Paid For" (Total or Independent) is the highest number found in the appropriate box in column 1.

FW

UNITED STATES PATENT AND TRADEMARK OFFICE

UNITED STATES DEPARTMENT OF COMMERCE
United States Patent and Trademark Office
Address: COMMISSIONER FOR PATENTS
P.O. Box 1450
Alexandria, Virginia 22313-1450
www.uspto.gov

APPLICATION NO.	FILING DATE	FIRST NAMED INVENTOR	ATTORNEY DOCKET NO.	CONFIRMATION NO.
10/289,011	11/06/2002	Itzhak Gurantz	9226	9030

24244 7590 11/02/2005

MICHAEL W LANDRY
5098 SEACHASE STREET
SAN DIEGO, CA 92130

EXAMINER
SHARMA, SUJATHA R

ART UNIT	PAPER NUMBER
2684	

DATE MAILED: 11/02/2005

Please find below and/or attached an Office communication concerning this application or proceeding.

PTO-90C (Rev. 10/03)

Office Action Summary	Application No.	Applicant(s)	
	10/289,011	GURANTZ ET AL.	
	Examiner	Art Unit	
	Sujatha Sharma	2684	

-- The MAILING DATE of this communication appears on the cover sheet with the correspondence address --

Period for Reply

A SHORTENED STATUTORY PERIOD FOR REPLY IS SET TO EXPIRE 3 MONTH(S) OR THIRTY (30) DAYS, WHICHEVER IS LONGER, FROM THE MAILING DATE OF THIS COMMUNICATION.

- Extensions of time may be available under the provisions of 37 CFR 1.136(a). In no event, however, may a reply be timely filed after SIX (6) MONTHS from the mailing date of this communication.
- If NO period for reply is specified above, the maximum statutory period will apply and will expire SIX (6) MONTHS from the mailing date of this communication.
- Failure to reply within the set or extended period for reply will, by statute, cause the application to become ABANDONED (35 U.S.C. § 133). Any reply received by the Office later than three months after the mailing date of this communication, even if timely filed, may reduce any earned patent term adjustment. See 37 CFR 1.704(b).

Status

1)☒ Responsive to communication(s) filed on 11 August 2005.

2a)☒ This action is **FINAL**. 2b)☐ This action is non-final.

3)☐ Since this application is in condition for allowance except for formal matters, prosecution as to the merits is closed in accordance with the practice under *Ex parte Quayle*, 1935 C.D. 11, 453 O.G. 213.

Disposition of Claims

4)☒ Claim(s) 1-23 is/are pending in the application.

4a) Of the above claim(s) _____ is/are withdrawn from consideration.

5)☐ Claim(s) _____ is/are allowed.

6)☒ Claim(s) 1-23 is/are rejected.

7)☐ Claim(s) _____ is/are objected to.

8)☐ Claim(s) _____ are subject to restriction and/or election requirement.

Application Papers

9)☐ The specification is objected to by the Examiner.

10)☐ The drawing(s) filed on _____ is/are: a)☐ accepted or b)☐ objected to by the Examiner.

Applicant may not request that any objection to the drawing(s) be held in abeyance. See 37 CFR 1.85(a).

Replacement drawing sheet(s) including the correction is required if the drawing(s) is objected to. See 37 CFR 1.121(d).

11)☐ The oath or declaration is objected to by the Examiner. Note the attached Office Action or form PTO-152.

Priority under 35 U.S.C. § 119

12)☐ Acknowledgment is made of a claim for foreign priority under 35 U.S.C. § 119(a)-(d) or (f).

a)☐ All b)☐ Some * c)☐ None of:

1.☐ Certified copies of the priority documents have been received.

2.☐ Certified copies of the priority documents have been received in Application No. _____.

3.☐ Copies of the certified copies of the priority documents have been received in this National Stage application from the International Bureau (PCT Rule 17.2(a)).

* See the attached detailed Office action for a list of the certified copies not received.

Attachment(s)

1) ☒ Notice of References Cited (PTO-892)
2) ☐ Notice of Draftsperson's Patent Drawing Review (PTO-948)
3) ☐ Information Disclosure Statement(s) (PTO-1449 or PTO/SB/08) Paper No(s)/Mail Date _____.
4) ☐ Interview Summary (PTO-413) Paper No(s)/Mail Date. _____ .
5) ☐ Notice of Informal Patent Application (PTO-152)
6) ☐ Other: _____.

DETAILED ACTION

Claim Rejections - 35 USC § 102

1. The following is a quotation of the appropriate paragraphs of 35 U.S.C. 102 that form the basis for the rejections under this section made in this Office action:

> A person shall be entitled to a patent unless –
>
> (e) the invention was described in (1) an application for patent, published under section 122(b), by another filed in the United States before the invention by the applicant for patent or (2) a patent granted on an application for patent by another filed in the United States before the invention by the applicant for patent, except that an international application filed under the treaty defined in section 351(a) shall have the effects for purposes of this subsection of an application filed in the United States only if the international application designated the United States and was published under Article 21(2) of such treaty in the English language.

2. Claims 1,2 is rejected under 35 U.S.C. 102(e) as being anticipated by Shah [US 6,441,797].

Regarding claim 1, Shah discloses a system for redistributing broadband content to a multiplicity of receiver units. Shah further discloses:

- A signal distribution for distributing a plurality of low noise amplifier and block converter (LNB) signals over a communication channel to a receiver; see Figs 1,4, col. 1, line 64 – col. 3, line 6
- a signal selector that receives a plurality of wideband signals comprising a plurality of narrowband signals and selects at least one narrowband signal from at least one wideband signal; see Fig. 4 and col. 3, line 55 – col. 4, line 38
- a frequency translator coupled to the signal selector that is capable of shifting the selected narrowband signal to a predetermined carrier frequency to produce an RF signal; see Figs. 1,4, col. 2, line 66 – col. 3, line 3 and col. 4, lines 61-67
- a signal combiner coupled to at least one frequency translator capable of combining at least two RF signals to produce a composite signal whereby the

composite signal is transmitted to the receiver; See Figs. 1,4 and col 3, line 55 – col. 4, line 38

Regarding claim 2, Shah discloses a method of signal distribution wherein the communication channel is a single cable connected between the signal selector and the receiver. See Figs. 3,4 and col. 3, lines 47-54 and col. 4, lines 28-38.

Regarding claim 5, Shah further discloses a signal distribution system wherein the signal selector is responsive to channel select information transmitted by a receiving unit. See col. 4, lines 28-38

Regarding claim 6, Williams discloses a signal distribution system wherein channel select information is transmitted over the same cable as the composite signal. See 122 in figs. 3,4 and col. 3, lines 47-54 and col. 4, lines 28-38.

Regarding claim 8, Shah discloses signal distribution system for distributing signals comprising a plurality of channels from a plurality of sources between a first unit and a second unit over a communication medium comprising:

- means in the first unit for selecting channels from a plurality of sources and combining the selected channels into a composite signal without demodulating channels and without changing the modulation of the channels and transmitting the composite signal over the medium and means in the second unit for receiving the composite signal; see Figs. 1-4, col. 2, line 25 – col. 4, line 51

- means in the first unit and second units for bi-directionally communicating control information between both units. See col. 4, lines 28-38

Regarding claim 9, Shah further discloses a signal distribution system wherein the control information comprises channel selection requests originating from the second unit and the control information comprises channel mapping information originating from the first unit. See col. 4, lines 28-52

Regarding claim 11, Shah further discloses a signal distribution system wherein the first unit is a satellite outdoor unit (see figs. 1,2 and col. 2, lines 42 - 49) and the second unit is a satellite integrated receiver decoder unit (see figs. 1,2 and col. 2, lines 42 - 49).

Regarding claim 12, Shah further discloses a signal distribution system wherein the communication medium is a coaxial cable connected to the satellite outdoor unit. See Figs. 3,4 and col. 3, lines 47-54 and col. 4, lines 28-38.

Regarding claim 13, Shah further discloses signal distribution system of claim 12 wherein the means for bi-directional communicating uses the same communication medium as the composite signal. See 122 in figs. 3,4 and col. 3, lines 47-54 and col. 4, lines 28-38.

Regarding claim 14, Shah discloses a method of communicating a plurality of transponder signals from a satellite outdoor unit (ODU) to integrated receiver decoders (IRDs) over a single cable connected to the ODU, the method comprising the steps of:

- communicating a transponder request signal to the ODU; col. 3, lines 47-54 and col. 4, lines 28-38
- in the ODU, selecting a transponder signal responsive to the transponder request signal and combining selected transponder signals into a composite signal; see Figs. 1-4, col. 2, line 25 – col. 4, line 51
- transmitting the composite signal over the single cable from the ODU to IRDs, wherein the modulation of the transponder signal is not altered by the steps of selecting, combining and transmitting. See 122 in figs. 3,4 and col. 3, lines 47-54 and col. 4, lines 28-38.

Regarding claims 16,17 Shah discloses a method further comprising frequency translating the selected transponder channels before combining. See col. 3, line 55 – col. 4, line 38

Regarding claim 19, Williams further discloses a method wherein the transponder request signal is transmitted over the cable from an IRD. See Figs. 3,4 and col. 3, lines 47-54 and col. 4, lines 28-38.

Claim Rejections - 35 USC § 103

3. The following is a quotation of 35 U.S.C. 103(a) which forms the basis for all obviousness rejections set forth in this Office action:

> (a) A patent may not be obtained though the invention is not identically disclosed or described as set forth in section 102 of this title, if the differences between the subject matter sought to be patented and the prior art are such that the subject matter as a whole would have been obvious at the time the invention was made to a person having ordinary skill in the art to which said subject matter pertains. Patentability shall not be negatived by the manner in which the invention was made.

4. Claim 3 is rejected under 35 U.S.C. 103(a) as being unpatentable over Shah [US 6,441,797] in view of Williams [US 6,493,873].

Regarding claim 3, Shah discloses all the limitations as claimed. However, hoe does not explicitly disclose a method wherein the signal selector comprises an analog to digital converter and a digital filter

Williams, in the same field of endeavor, teaches a signal distribution system wherein the signal selector comprises an analog to digital converter and a digital filter. See col. 17, lines 5-63.

Therefore it would have been obvious to one with ordinary skill in the art at the time the invention was made to provide the above teachings of Williams to Shah for proper performance of the signal distribution system.

Regarding claim 4, Williams discloses a signal distribution system wherein the signal selector comprises a tuner. See 54 in Fig.3.

Regarding claims 7,20 Williams further discloses a signal distribution system wherein channel select information is transmitted over a wireless link. See col. 6, lines 27-34.

Regarding claim 18, Williams further discloses a method further comprising the step of splitting the composite signal inside a home and distributing to a plurality of IRDs. See col. 1, lines 13-18 and col. 3, lines 50-67

Regarding claim 21, Williams further discloses a method comprising the steps of:

- frequency translating the selected transponder channels to a predetermined frequency before combining; . See col. 3, line 56 – col. 4, line 33, col. 6, lines 12-21, col. 9, lines 40-48, Figs. 1,3.
- splitting the composite signal inside a home and distributing to a plurality of IRDs. See col. 1, lines 13-18 and col. 3, lines 50-67

Regarding claim 22, Williams further discloses a method wherein the transponder request signal is transmitted over the cable from an IRD. See 26 in Fig.1, and col. 4, line 61 – col. 5, line 5

Regarding claim 23 Williams further discloses a signal distribution system wherein channel select information is transmitted over a wireless link. See col. 6, lines 27-34.

5. Claim 10 is rejected under 35 U.S.C. 103(a) as being unpatentable over Shah [US 6,441,797] in view of Sao [US 6,437,837].

Regarding claim 10, Shah discloses all the limitations as claimed. However he does not disclose a method wherein the signal distribution system further comprises means for carrier offset correction.

Sao, in the same filed of endeavor, teaches a broadcast signal processing apparatus and a method in which channel interference by analog broadcast is prevented by correcting the frequency offset of the broadcast signal. See col. 2, line 10 – col. 3, line 25.

Therefore it would have been obvious to one with ordinary skill in the art at the time the invention was made to provide the above teachings of Seo to Shah in order to effectively prevent a co-channel interference thus reducing noise and improving the quality of the received signal.

6. Claim 15 is rejected under 35 U.S.C. 103(a) as being unpatentable over Shah [US 6,441,797] in view of Lindell [US 2003/0008628].

Regarding claim 15, Shah discloses all the limitations as claimed. However, he does not explicitly disclose a method of filtering a transponder signal with a band pass filter having a bandwidth ranging from 5% to 100% wider than the bandwidth of the transponder signal

Lindell, in the same field of endeavor, teaches a method of filtering a transponder signal with a band pass filter having a bandwidth ranging from 5% to 100% wider than the bandwidth of the transponder signal. See paragraphs 100 and 113.

Therefore it would have been obvious to one with ordinary skill in the art at the time the invention was made to provide the above teachings of Lindell to Shah in order to minimize degradation in the signal level.

Conclusion

7. The prior art made of record and not relied upon is considered pertinent to applicant's disclosure.

Green [US 6,947,702] Satellite broadcast receiving and distribution system

Horie [US 6,556,807] Antenna receiving system

8. Applicant's amendment necessitated the new ground(s) of rejection presented in this Office action. Accordingly, **THIS ACTION IS MADE FINAL**. See MPEP § 706.07(a). Applicant is reminded of the extension of time policy as set forth in 37 CFR 1.136(a).

A shortened statutory period for reply to this final action is set to expire THREE MONTHS from the mailing date of this action. In the event a first reply is filed within TWO MONTHS of the mailing date of this final action and the advisory action is not mailed until after the end of the THREE-MONTH shortened statutory period, then the shortened statutory period will expire on the date the advisory action is mailed, and any extension fee pursuant to 37 CFR 1.136(a) will be calculated from the mailing date of the advisory action. In no event, however, will the statutory period for reply expire later than SIX MONTHS from the date of this final action.

Any inquiry concerning this communication or earlier communications from the examiner should be directed to Sujatha Sharma whose telephone number is 571-272-7886. The examiner can normally be reached on Mon-Fri 7.30am - 4.00pm.

If attempts to reach the examiner by telephone are unsuccessful, the examiner's supervisor, Nay Maung can be reached on 571-272-7882. The fax phone number for the organization where this application or proceeding is assigned is 703-872-9306.

Information regarding the status of an application may be obtained from the Patent Application Information Retrieval (PAIR) system. Status information for published applications may be obtained from either Private PAIR or Public PAIR. Status information for unpublished applications is available through Private PAIR only. For more information about the PAIR system, see http://pair-direct.uspto.gov. Should you have questions on access to the Private PAIR system, contact the Electronic Business Center (EBC) at 866-217-9197 (toll-free).

Sujatha Sharma
October 27, 2005

EDAN ORGAD
PATENT EXAMINER/TELECOMM.
EO. 10/29/05

Notice of References Cited	Application/Control No. 10/289,011	Applicant(s)/Patent Under Reexamination GURANTZ ET AL.	
	Examiner Sujatha Sharma	Art Unit 2684	Page 1 of 1

U.S. PATENT DOCUMENTS

*		Document Number Country Code-Number-Kind Code	Date MM-YYYY	Name	Classification
	A	US-6,556,807	04-2003	Horie et al.	455/3.02
	B	US-6,947,702	09-2005	Green et al.	455/3.02
	C	US-2003/0008628	01-2003	Lindell et al.	455/180.1
	D	US-6,441,797	08-2002	Shah, Dipak M.	343/840
	E	US-			
	F	US-			
	G	US-			
	H	US-			
	I	US-			
	J	US-			
	K	US-			
	L	US-			
	M	US-			

FOREIGN PATENT DOCUMENTS

*		Document Number Country Code-Number-Kind Code	Date MM-YYYY	Country	Name	Classification
	N					
	O					
	P					
	Q					
	R					
	S					
	T					

NON-PATENT DOCUMENTS

*		Include as applicable: Author, Title Date, Publisher, Edition or Volume, Pertinent Pages)
	U	
	V	
	W	
	X	

*A copy of this reference is not being furnished with this Office action. (See MPEP § 707.05(a).)
Dates in MM-YYYY format are publication dates. Classifications may be US or foreign.

Search Notes	Application No.	Applicant(s)
	10/289,011	GURANTZ ET AL.
	Examiner: Sujatha Sharma	Art Unit: 2684

SEARCHED

Class	Subclass	Date	Examiner
455	3.01-3.05 103, 137 12.1, 20	4/26/05	SS
455	427	4/26/05	SS
725	64, 71 78, 98	4/26/05	SS
725	118	4/26/05	SS
updated search		10/25/05	SS

INTERFERENCE SEARCHED

Class	Subclass	Date	Examiner

SEARCH NOTES (INCLUDING SEARCH STRATEGY)

	DATE	EXMR
Eliseo Ramos	4/19/05	SS
Lewis West	10/25/05	SS

U.S. Patent and Trademark Office

Part of Paper No. 20050420

Index of Claims

Application No.	Applicant(s)
10/289,011	GURANTZ ET AL.
Examiner	**Art Unit**
Sujatha Sharma	2684

√	Rejected	–	(Through numeral) Cancelled	N	Non-Elected	A	Appeal
=	Allowed	÷	Restricted	I	Interference	O	Objected

Claim		Date							
Final	Original	4/26/05	10/27/05						
	1	√	√						
	2								
	3								
	4								
	5								
	6								
	7								
	8								
	9								
	10								
	11								
	12								
	13								
	14								
	15								
	16								
	17								
	18								
	19								
	20								
	21								
	22								
	23								
	24								
	25								
	26								
	27								
	28								
	29								
	30								
	31								
	32								
	33								
	34								
	35								
	36								
	37								
	38								
	39								
	40								
	41								
	42								
	43								
	44								
	45								
	46								
	47								
	48								
	49								
	50								

Claim		Date							
Final	Original								
	51								
	52								
	53								
	54								
	55								
	56								
	57								
	58								
	59								
	60								
	61								
	62								
	63								
	64								
	65								
	66								
	67								
	68								
	69								
	70								
	71								
	72								
	73								
	74								
	75								
	76								
	77								
	78								
	79								
	80								
	81								
	82								
	83								
	84								
	85								
	86								
	87								
	88								
	89								
	90								
	91								
	92								
	93								
	94								
	95								
	96								
	97								
	98								
	99								
	100								

Claim		Date							
Final	Original								
	101								
	102								
	103								
	104								
	105								
	106								
	107								
	108								
	109								
	110								
	111								
	112								
	113								
	114								
	115								
	116								
	117								
	118								
	119								
	120								
	121								
	122								
	123								
	124								
	125								
	126								
	127								
	128								
	129								
	130								
	131								
	132								
	133								
	134								
	135								
	136								
	137								
	138								
	139								
	140								
	141								
	142								
	143								
	144								
	145								
	146								
	147								
	148								
	149								
	150								

OIPE IAP85
JAN 25 2006
PATENT & TRADEMARK OFFICE

IN THE UNITED STATES PATENT AND TRADEMARK OFFICE

Application No:	10/289,011
Filed:	11/06/2002
Applicant:	Gurantz et al.
Title:	Signal selector and combiner for broadband content distribution
Examiner/GAU:	Sujatha R Sharma / 2684
Date:	1/19/2006

Request for Continued Examination / Amendment / Reply

Mail Stop RCE
Commissioner for Patents
P.O. Box 1450
Alexandria VA 22313-1450

Dear Sir:

In response to the Office Action mailed 11/2/2005, please amend the above application as follows:

Claim amendments starting on page 2.

Remarks and arguments starting on page 6.

Certificate of Mailing

I hereby certify that this correspondence is being deposited with the United States Postal Service with sufficient postage as first class mail in an envelope addressed to:

Commissioner for Patents
P.O. Box 1450
Alexandria, VA 22313-1450

Date: 1/19/2006

Signed: Michael W. Landry

Name: Michael W. Landry

Claim Amendments:

1. (Currently amended) A signal distribution system for distributing a plurality of low noise amplifier and block converter (LNB) signals from a satellite outdoor unit (ODU) over a ~~communication channel~~ coaxial cable to ~~a receiver~~ an integrated receiver decoder (IRD) comprising:

a signal selector that receives a plurality of broadband LNB signals comprising a plurality of transponder signals, the signal selector is responsive to transponder select information transmitted by an IRD and selects ~~at least one~~ a plurality of transponder signals from at least one broadband LNB signal based on the transponder select information;

a frequency translator coupled to the signal selector that is capable of shifting the selected transponder signals to ~~a predetermined~~ new carrier frequencies[[y]] to produce [[an]] RF signals; and

a signal combiner coupled to at least one frequency translator capable of combining at least two RF signals to produce a composite signal;

wherein the modulation of the composite signal is the same as the modulation of the broadband LNB signals and wherein the composite signal is transmitted on the coaxial cable;

whereby the composite signal is transmitted to the ~~receivers~~ IRD.

2. (Currently amended) The signal distribution system of claim 1 further comprising a plurality of IRDs and wherein ~~the communication channel~~ the composite signal is transmitted on a single cable connected to the ODU and all IRDs receive channels extracted from the composite signal.

3. (Original) The signal distribution system of claim 1 wherein the signal selector comprises an analog to digital converter and a digital filter.

4. (Original) The signal distribution system of claim 1 wherein the signal selector comprises a tuner.

5. (Currently amended) ~~The signal distribution system of claim 1 wherein the signal selector is responsive to channel select information transmitted by a receiving unit.~~ The signal distribution system of claim 1 further comprising an integrated receiver decoder (IRD) connected to the coaxial cable with a plurality of tuners within the IRD, wherein each tuner within the IRD receives the composite signal and each tuner uses at least one transponder signal.

6. (Currently amended) The signal distribution system of claim [[5]] 1 wherein ~~channel~~ transponder select information is transmitted over the same cable as the composite signal.

7. (Currently amended) The signal distribution system of claim [[5]] 1 wherein ~~channel~~ transponder select information is transmitted over a wireless link.

8. (Currently amended) A signal distribution system for distributing signals comprising a plurality of channels from a plurality of sources between a first unit and a second unit over a communication medium comprising:

means in the first unit responsive to information transmitted by the second unit for extracting selected~~ing~~ channels from [[a]] each of the plurality of sources and combining the selected channels into a composite signal without demodulating channels and without changing the modulation of the channels and transmitting the composite signal over the medium; and

means in the second unit for receiving the composite signal and demodulating and decoding at least one channel; and

means in the first unit and second units for ~~bi-directionally~~ communicating control information from the second unit to the first unit ~~between both units~~.

9. (Original) The signal distribution system of claim 8 wherein the control information comprises channel selection requests originating from the second unit and the control information comprises channel mapping information originating from the first unit.

10. (Currently amended) The signal distribution system of claim 8, further comprising a means in the first unit for carrier offset correction.

11. (Original) The signal distribution system of claim 8 wherein the first unit is a satellite outdoor unit and the second unit is a satellite integrated receiver decoder unit.

12. (Currently amended) The signal distribution system of claim 11 wherein the communication medium ~~is a~~ consists of a single coaxial cable connected to the satellite outdoor unit.

13. (Original) The signal distribution system of claim 12 wherein the means for bi-directional communicating uses the same communication medium as the composite signal.

14. (Currently amended) A method of communicating a plurality of transponder signals from a satellite outdoor unit (ODU) that receives a plurality of satellite broadband signals to an integrated receiver decoder~~s~~ (IRD~~s~~) over a single cable connected to the ODU, the method comprising the steps of:

communicating a transponder request signal to the ODU from the IRD;

in the ODU, selecting a plurality of transponder signals extracted from the received satellite broadband signals, wherein the selecting is responsive to the transponder request signals;

combining selected transponder signals into a composite signal;

transmitting the composite signal over the single cable from the ODU to the IRDs, wherein the modulation of the transponder signal is not altered by the steps of selecting, combining, and transmitting.

15. (Previously amended) The method of claim 14 wherein the step of selecting a transponder signal comprises the step of: filtering a transponder signal with a band pass filter having a bandwidth ranging from 5% to 100% wider than the bandwidth of the transponder signal.

16. (Currently amended) The method of claim 14 ~~further~~ wherein the step of combining comprises~~ing~~ frequency translating the selected transponder channels before combining.

17. (Previously amended) The method of claim 15 further comprising frequency translating the selected transponder channels to a predetermined frequency before combining.

18. (Original) The method of claim 14 further comprising the step of splitting the composite signal inside a home and distributing to a plurality of IRDs.

19. (Currently amended) The method of claim 14 wherein the transponder request signal is transmitted over the cable from an IRD and all IRDs receive the same composite signal.

20. (Original) The method of claim 14 wherein the transponder request signal is transmitted over a wireless link to the ODU.

21. (Original) The method of claim 14 further comprising the steps of:

frequency translating the selected transponder channels to a predetermined frequency before combining; and

splitting the composite signal inside a home and distributing to a plurality of IRDs.

22. (Original) The method of claim 21 wherein the transponder request signal is transmitted over the cable from an IRD.

23. (Original) The method of claim 21 wherein the transponder request signal is transmitted over a wireless link to the ODU.

Remarks/Arguments

Each of the cited references has been reviewed and the rejections made to the claims have been considered. Claims are amended and arguments made to point out patentability of the claims.

Claims

Claims 1-23 remain in the application. Claims 1, 2, 5- 8, 10, 12, 14, 16, and 19 are currently amended. Reconsideration of the rejections is respectfully requested in view of the amendments and the following arguments.

Rejections under 35 U.S.C. 102

The Examiner has rejected claims 1-2, 7, 8, 9, 11, 12, 13, 14, 16, 17, and 19 under 35 U.S.C. 102 as being anticipated by Shah (U.S. 66,441,797).

Shah discloses a system for combining some transponder channels from one LNB output with the transponder channels from another LNB output, overlaying the selected channels of the first LNB into an unused portion of the second LNB output. The combined signal is a fixed combination of transponder channels from the two source LNBs. The combined LNB signals then feeds a multi-switch, which has several inputs and several outputs. The multi-switch selects an entire LNB (or combined LNB) output under control of a signal received from an IRD through one of the several cables connected to one of the several multi-switch outputs. Each IRD can select a different satellite/LNB output (representing a full set of satellite transponder signals). The multi-switch in Shah selects an entire band of transponder channels from one LNB or the combined LNB signal to route to an IRD connected to one of the several multi-switch outputs. The IRD command to the multi-port switch can select a full satellite/LNB or full combined LNB signal. There is no provision in Shah for the IRD to command, request, or select individual transponder channels. There is no mechanism disclosed in Shah for operating the selection of the transponder channels or the combiner under the control of the IRDs. The combiner in Shah is not operating under control of an IRD, only the multi-switch is controlled by the IRDs. The outdoor unit (ODU) in Shah, through its multi-switch, selects full satellite/LNB signals in response to IRD commands. The ODU of Shah, through its multi-port

switch, has several cables connecting from the ODU to the IRDs inside the building. Several cables run from the multi-switch, one for each of the IRDs in the building. Each IRD receives its own unique signal on its own cable from the ODU/multi-switch, although if two IRDs are commanding the same satellite signal, the signals each IRD receives will be a duplicate signal but sent over a separate cable.

In summary, the disclosure of Shah teaches multiple cables running from the ODU to the IRDs; the IRDs select a full satellite/LNB signal to be transmitted in its corresponding cable; and the IRD control of the multi-switch selects full satellite/LNB signals, not individual transponder signals. The transponder combiner is fixed, the combined signal is a fixed set of transponder channels received from two or more satellites, the combined signal does not change in response to IRD select signals or commands.

In the applicants' invention, a single cable can run from the selector and combiner, which can be in the ODU, to the inside of the building. The signal is split inside the building using a gateway or splitter device to distribute a composite signal to IRDs. The IRD commands to the selector requests individual transponder signals from the satellite signals output by any one of the LNBs. The signal selector selects the transponder signals requested from each IRD, combines all of the selected transponder signals into a composite signal, then transmits the composite signal into the building and to the IRDs. Each IRD can receive the same composite signal, sent preferably over a single cable, and tunes its requested transponder signal for decoding and display on a television connected to the IRD. The composite signal changes based on the collection of transponder select signals from each of the IRDs. In Shah, a different signal is sent to each IRD over a separate cable for each IRD. In Shah, the combined signal does not change with the LNB select signals from each of the IRDs.

The claims have been amended to address the rejections based on Shah, adding elements and clarifying the scope of the claims to make the claims clearly patentable over Shah.

Previous rejections based on Williams (U.S. 6,493,873) were addressed in previous amendments incorporating the limitation into each claim of <u>wherein the modulation of the composite signal is the same as the modulation of the broadband LNB signals</u> or similar language. Williams transmodulated

the LNB signals, converting QPSK to QAM, the applicant's invention does not transmodulate, this limitation is still reflected in the current claims by the previous amendments.

Claim 1 has been amended to incorporate the limitations that the signal selector is responsive to transponder select information transmitted by an integrated receiver decoder (IRD), that the selection is responsive to and based on the transponder select information, that the frequency translation is to new frequencies, and that the composite signal is transmitted on the coaxial cable. These limitations are supported by the original specification, including: original claim 5 (currently amended), page 3 line 31 to page 4 line 1; page 8 line 24; page 4 lines 14-16 original claim 14; and page 4 lines 5-6. Shah does not teach a transponder selector or combiner responsive to IRD commands.

It should be noted further that in Shah, the frequency translator is part of the LNB, whereas in the applicant's invention and claim, the frequency translator operates on the signal output from the LNB, as recited in the claim.

Applicant believes that Claim 1, as amended, is patentable over Shah and allowance is respectfully requested.

Regarding claim 2, in light of the amendments and arguments of claim 1 upon which this claim depends, claim 2 should be allowable. Additionally, claim 2 is amended to include the limitation comprising a plurality of IRDs and that the composite signal is transmitted on a single cable connected to the ODU and all IRDs receive channels extracted from the composite signal. These limitations are supported by the original specification, including: page 4 lines 2-6; page 17 line 28-29; page 23 line 7-9; and Fig. 2. These amendments and the original limitations distinguish the claim further from Shah, in which a single cable connects between the combiner and the multi-switch within the ODU, but the ODU in Shah has several cables connected to the ODU carrying the combined signal or other LNB signals to the IRDs. The IRDs in Shah do not all extract channels from the combined signal but instead some IRDs receive other signals that are do not result from selecting and combining transponder channels.

Regarding claims 3-7, in light of the amendments and arguments of claim 1 upon which these claims depend, these claims should be allowable.

Additionally, claim 5 has been amended to include the limitation of an IRD with a plurality of tuners connected to the coaxial cable. These limitations are supported by the original specification, including: Page 11, line 14-15; page 17, line 25 to page 18, line 2.

Claims 6 and 7 are amended to depend on claim 1.

Claim 8 has been amended to include the limitation responsive to information transmitted by the second unit for extracting selected channels and combining the selected channels, in order to distinguish the claim from Shah. In Shah, the selecting and combining transponders is fixed and not responsive to information transmitted for a second unit. The control in Shah does not affect the extraction or combining of transponders, but only affects which LNB output is made available to a particular IRD. The selection at the multi-switch controlled by IRDs in Shah can select the combined signal or an unaltered LNB output, but cannot control the selection of channels combined into a composite signal. Claim 8 is also amended to remove "bi-directionally" communicating. Support for this amendment is found in the original specification including at page 4 lines 24-26; and page 6 lines 24-25.

Applicant believes that Claim 8, as amended, is patentable over Shah and allowance is respectfully requested.

Regarding claims 9, 11, 12 and 13, in light of the amendments to claim 8 upon which these claims depend, should be allowable. Additionally, claim 12 is amended to include the limitation consists of a single coaxial cable to clearly distinguish the claim from Shah, which teaches several cables connected to the ODU.

Claim 14 has been amended, and in particular, to expressly recite the limitation "selecting a plurality of transponder signals extracted from the received satellite broadband signals, wherein the selecting is responsive to the transponder request signals", which is not taught by Shah. These limitations are

supported by the original specification, including: page 4 lines 5-6; page 6 line 22-23; Fig. 5 and Fig. 11. Shah selects LNB (broadband) signal responsive to IRD signals, Shah does not teach selecting and extracting transponder signals responsive to IRD signals. Shah only teaches combining a specific fixed set of transponder signals.

Regarding claims 15 through 23, in light of the amendments to claim 14 upon which these claims depend, these claims should be allowable.

Rejections under 35 U.S.C. 103

The Examiner rejected claims 3, 4, 7, 20, 18, 21, 22, 23 under 35 U.S.C. 103(a) as being unpatentable over Shah (U.S. 6,441,797) in view of Williams (U.S. 6,493,873). In light of the amendments and arguments to the independent claims upon which these claims depend, these claims should be allowable along with the independent claims.

The Examiner rejected claim 10 under 35 U.S.C. 103(a) as being unpatentable over Shah (U.S. 6,441,797) in view of Seo (U.S. 6,437,837). In light of the amendments and arguments to the independent claim 8 upon which this claim depends, this claim should be allowable along with the independent claim. Further, claim 10 is amended to include the limitation that the frequency offset is performed <u>in the first unit</u> containing the selector and combiner to distinguish from Seo, where offset correction is performed in a television.

Seo discloses an apparatus and method of preventing co-channel interference of an analog television broadcast channel into the processing of a digital television broadcast channel. The disclosure of Seo describes a technique employed in a television receiver by using an NTSC rejection filter (NRF) to reject an analog/NTSC television signal that is transmitted from a distant location at the same channel frequency as a local digital television signal. The NRF is only effective if the frequency offset of the analog transmission is within an allowable error range. The disclosure in Seo describes detecting the carrier offset of the analog broadcast signal then adjusting the local oscillator of the tuner to result in a tuned signal that has the proper frequency alignment in order for the NRF to reject the analog signal. The rejection of the analog signal results in less noise in the digital broadcast signal. The technique of

Seo is entirely in the television receiver to remove interference from an analog signal that is co-channel, that is, sharing the same frequency channel with a digital signal.

To establish a prima facie case of obviousness, three basic criteria must be met. First, there must be some suggestion or motivation, either in the references themselves or in the knowledge generally available to one of ordinary skill in the art, to modify the reference or to combine reference teachings. Second, there must be a reasonable expectation of success. Finally, the prior art reference (or references when combined) must teach or suggest all the claim limitations. The teaching or suggestion to make the claimed combination and the reasonable expectation of success must both be found in the prior art, not in applicant's disclosure. In re Vaeck, 947 F.2d 488, 20 USPQ2d 1438 (Fed. Cir. 1991). See MPEP section 2143.

The carrier offset correction of the present invention, and as recited in amended claim 10, is not performed in a television receiver, as disclosed in Seo. The present invention employs carrier offset correction to properly filter the selected signals and to avoid interference with adjacent channels (application page 11 line 25 to page 12 line 8), not co-channel interference as in Seo. There is no suggestion or motivation to modify the teaching of Shah or Seo to incorporate carrier offset correction into a signal selector and combiner. Shah does not recognize the problem of carrier offset creating the potential for overlapping transponders when combining. Shah does not disclose a technique for controlling the LO to affect carrier offset. In Seo, there is no signal selecting and combining operation and no suggestion of application of the teaching of Seo to signal selecting and combining. There would be no expectation of success of applying the teaching of Seo with the teaching of Shah because the techniques of each reference are inapplicable to each other.

The Examiner rejected claim 15 under 35 U.S.C. 103(a) as being unpatentable over Shah (U.S. 6,441,797) in view of Lindell (U.S. 2003/0008628). In light of the amendments and arguments to the independent claim 14 upon which this claim depends, this claim should be allowable along with the independent claim.

Conclusion

In view of the foregoing, claims 1-23 as amended are in condition for allowance and such action is respectfully requested.

If it is felt that direct communication would serve to advance prosecution of this case, the examiner is invited to call the attorney at the below listed telephone number.

Date: 1/19/2006

Respectfully submitted,

Michael W. Landry

Michael W. Landry
Attorney for Applicants
Reg. No. 38,216
5098 Seachase St.
San Diego CA 92130
858-229-6801
mlandry@iprsolutions.com

OIPE IAP55 JAN 25 2006 PATENT & TRADEMARK OFFICE

RCE/2684

PTO/SB/30 (04-05)
Approved for use through 07/31/2006. OMB 0651-0031
U.S. Patent and Trademark Office; U.S. DEPARTMENT OF COMMERCE
Under the Paperwork Reduction Act of 1995, no persons are required to respond to a collection of information unless it contains a valid OMB control number.

Request for Continued Examination (RCE) Transmittal

Address to:
Mail Stop RCE
Commissioner for Patents
P.O. Box 1450
Alexandria, VA 22313-1450

Application Number	10/289,011
Filing Date	11/6/2002
First Named Inventor	Gurantz
Art Unit	2684
Examiner Name	Sharma
Attorney Docket Number	9226

This is a Request for Continued Examination (RCE) under 37 CFR 1.114 of the above-identified application.
Request for Continued Examination (RCE) practice under 37 CFR 1.114 does not apply to any utility or plant application filed prior to June 8, 1995, or to any design application. See Instruction Sheet for RCEs (not to be submitted to the USPTO) on page 2.

1. Submission required under 37 CFR 1.114 Note: If the RCE is proper, any previously filed unentered amendments and amendments enclosed with the RCE will be entered in the order in which they were filed unless applicant instructs otherwise. If applicant does not wish to have any previously filed unentered amendment(s) entered, applicant must request non-entry of such amendment(s).

a. ☐ Previously submitted. If a final Office action is outstanding, any amendments filed after the final Office action may be considered as a submission even if this box is not checked.

i. ☐ Consider the arguments in the Appeal Brief or Reply Brief previously filed on _____

ii. ☐ Other _____

b. ☑ Enclosed

i. ☑ Amendment/Reply

ii. ☐ Affidavit(s)/ Declaration(s)

iii. ☐ Information Disclosure Statement (IDS)

iv. ☑ Other Reply Postcard

2. Miscellaneous

a. ☐ Suspension of action on the above-identified application is requested under 37 CFR 1.103(c) for a period of _____ months. (Period of suspension shall not exceed 3 months; Fee under 37 CFR 1.17(i) required)

b. ☐ Other _____

3. Fees The RCE fee under 37 CFR 1.17(e) is required by 37 CFR 1.114 when the RCE is filed.

a. ☑ The Director is hereby authorized to charge the following fees, any underpayment of fees, or credit any overpayments, to Deposit Account No. 502165. I have enclosed a duplicate copy of this sheet.

i. ☐ RCE fee required under 37 CFR 1.17(e)

ii. ☐ Extension of time fee (37 CFR 1.136 and 1.17)

iii. ☐ Other _____

b. ☐ Check in the amount of $ _____ enclosed

c. ☑ Payment by credit card (Form PTO-2038 enclosed)

WARNING: Information on this form may become public. Credit card information should not be included on this form. Provide credit card information and authorization on PTO-2038.

SIGNATURE OF APPLICANT, ATTORNEY, OR AGENT REQUIRED

Signature	M. W. Landry	Date	1/19/2006
Name (Print/Type)	Michael W. Landry	Registration No.	38,216

CERTIFICATE OF MAILING OR TRANSMISSION

I hereby certify that this correspondence is being deposited with the United States Postal Service with sufficient postage as first class mail in an envelope addressed to: Mail Stop RCE, Commissioner for Patents, P. O. Box 1450, Alexandria, VA 22313-1450 or facsimile transmitted to the U.S. Patent and Trademark Office on the date shown below.

Signature	M. W. Landry		
Name (Print/Type)	Michael W. Landry	Date	1/19/2006

This collection of information is required by 37 CFR 1.114. The information is required to obtain or retain a benefit by the public which is to file (and by the USPTO to process) an application. Confidentiality is governed by 35 U.S.C. 122 and 37 CFR 1.11 and 1.14. This collection is estimated to take 12 minutes to complete, including gathering, preparing, and submitting the completed application form to the USPTO. Time will vary depending upon the individual case. Any comments on the amount of time you require to complete this form and/or suggestions for reducing this burden, should be sent to the Chief Information Officer, U.S. Patent and Trademark Office, U.S. Department of Commerce, P.O. Box 1450, Alexandria, VA 22313-1450. DO NOT SEND FEES OR COMPLETED FORMS TO THIS ADDRESS. **SEND TO: Mail Stop RCE, Commissioner for Patents, P.O. Box 1450, Alexandria, VA 22313-1450.**

If you need assistance in completing the form, call 1-800-PTO-9199 and select option 2.

01/25/2006 EAREGAY1 00000079 10289011

01 FC:2801 395.00 OP

PATENT APPLICATION FEE DETERMINATION RECORD
Effective October 1, 2001

Application or Docket Number
10/289011 / 1226

CLAIMS AS FILED - PART I

1.8.14

	(Column 1)	(Column 2)
TOTAL CLAIMS	23	
FOR	NUMBER FILED	NUMBER EXTRA
TOTAL CHARGEABLE CLAIMS	23 minus 20=	* 3
INDEPENDENT CLAIMS	3 minus 3 =	* 0
MULTIPLE DEPENDENT CLAIM PRESENT		☐

* If the difference in column 1 is less than zero, enter "0" in column 2

SMALL ENTITY TYPE ☐		OR	OTHER THAN SMALL ENTITY	
RATE	FEE		RATE	FEE
BASIC FEE	370.00	OR	BASIC FEE	740.00
X$ 9=	27	OR	X$18=	
X42=	-0-	OR	X84=	
+140=	-0-	OR	+280=	
TOTAL	397	OR	TOTAL	

CLAIMS AS AMENDED - PART II

8/11/05

AMENDMENT A

	(Column 1) CLAIMS REMAINING AFTER AMENDMENT		(Column 2) HIGHEST NUMBER PREVIOUSLY PAID FOR	(Column 3) PRESENT EXTRA
Total	* 23	Minus	** 23	= Ø
Independent	* 3	Minus	*** 3	= Ø
FIRST PRESENTATION OF MULTIPLE DEPENDENT CLAIM				☐

SMALL ENTITY		OR	OTHER THAN SMALL ENTITY	
RATE	ADDI-TIONAL FEE		RATE	ADDI-TIONAL FEE
X$ 9=		OR	X$18=	
X42=		OR	X84=	
+140=		OR	+280=	
TOTAL ADDIT. FEE		OR	TOTAL ADDIT. FEE	

RCE filed
1/25/06

AMENDMENT B

	(Column 1) CLAIMS REMAINING AFTER AMENDMENT		(Column 2) HIGHEST NUMBER PREVIOUSLY PAID FOR	(Column 3) PRESENT EXTRA
Total	* 23	Minus	** 23	= Ø
Independent	* 3	Minus	*** 3	= Ø
FIRST PRESENTATION OF MULTIPLE DEPENDENT CLAIM				☐

RATE	ADDI-TIONAL FEE		RATE	ADDI-TIONAL FEE
X$ 9=		OR	X$18=	
X42=		OR	X84=	
+140=		OR	+280=	
TOTAL ADDIT. FEE		OR	TOTAL ADDIT. FEE	

AMENDMENT C

	(Column 1) CLAIMS REMAINING AFTER AMENDMENT		(Column 2) HIGHEST NUMBER PREVIOUSLY PAID FOR	(Column 3) PRESENT EXTRA
Total	*	Minus	**	=
Independent	*	Minus	***	=
FIRST PRESENTATION OF MULTIPLE DEPENDENT CLAIM				☐

RATE	ADDI-TIONAL FEE		RATE	ADDI-TIONAL FEE
X$ 9=		OR	X$18=	
X42=		OR	X84=	
+140=		OR	+280=	
TOTAL ADDIT. FEE		OR	TOTAL ADDIT. FEE	

* If the entry in column 1 is less than the entry in column 2, write "0" in column 3.
** If the "Highest Number Previously Paid For" IN THIS SPACE is less than 20, enter "20."
*** If the "Highest Number Previously Paid For" IN THIS SPACE is less than 3, enter "3."
The "Highest Number Previously Paid For" (Total or Independent) is the highest number found in the appropriate box in column 1.

FORM PTO-875 (Rev. 8/01)

Patent and Trademark Office, U.S. DEPARTMENT OF COMMERCE

UNITED STATES PATENT AND TRADEMARK OFFICE

UNITED STATES DEPARTMENT OF COMMERCE
United States Patent and Trademark Office
Address: COMMISSIONER FOR PATENTS
P.O. Box 1450
Alexandria, Virginia 22313-1450
www.uspto.gov

APPLICATION NO.	FILING DATE	FIRST NAMED INVENTOR	ATTORNEY DOCKET NO.	CONFIRMATION NO.
10/289,011	11/06/2002	Itzhak Gurantz	9226	9030

24244 7590 04/05/2006

MICHAEL W LANDRY
5098 SEACHASE STREET
SAN DIEGO, CA 92130

EXAMINER
SHARMA, SUJATHA R

ART UNIT	PAPER NUMBER
2618	

DATE MAILED: 04/05/2006

Please find below and/or attached an Office communication concerning this application or proceeding.

PTO-90C (Rev. 10/03)

Office Action Summary	Application No.	Applicant(s)	
	10/289,011	GURANTZ ET AL.	
	Examiner	Art Unit	
	Sujatha Sharma	2684	

-- The MAILING DATE of this communication appears on the cover sheet with the correspondence address --

Period for Reply

A SHORTENED STATUTORY PERIOD FOR REPLY IS SET TO EXPIRE 3 MONTH(S) OR THIRTY (30) DAYS, WHICHEVER IS LONGER, FROM THE MAILING DATE OF THIS COMMUNICATION.

- Extensions of time may be available under the provisions of 37 CFR 1.136(a). In no event, however, may a reply be timely filed after SIX (6) MONTHS from the mailing date of this communication.
- If NO period for reply is specified above, the maximum statutory period will apply and will expire SIX (6) MONTHS from the mailing date of this communication.
- Failure to reply within the set or extended period for reply will, by statute, cause the application to become ABANDONED (35 U.S.C. § 133). Any reply received by the Office later than three months after the mailing date of this communication, even if timely filed, may reduce any earned patent term adjustment. See 37 CFR 1.704(b).

Status

1)☒ Responsive to communication(s) filed on 25 January 2006.

2a)☐ This action is **FINAL**. 2b)☒ This action is non-final.

3)☐ Since this application is in condition for allowance except for formal matters, prosecution as to the merits is closed in accordance with the practice under *Ex parte Quayle*, 1935 C.D. 11, 453 O.G. 213.

Disposition of Claims

4)☒ Claim(s) 1-23 is/are pending in the application.

4a) Of the above claim(s) _____ is/are withdrawn from consideration.

5)☐ Claim(s) _____ is/are allowed.

6)☒ Claim(s) 1-23 is/are rejected.

7)☐ Claim(s) _____ is/are objected to.

8)☐ Claim(s) _____ are subject to restriction and/or election requirement.

Application Papers

9)☐ The specification is objected to by the Examiner.

10)☐ The drawing(s) filed on _____ is/are: a)☐ accepted or b)☐ objected to by the Examiner.

Applicant may not request that any objection to the drawing(s) be held in abeyance. See 37 CFR 1.85(a).

Replacement drawing sheet(s) including the correction is required if the drawing(s) is objected to. See 37 CFR 1.121(d).

11)☐ The oath or declaration is objected to by the Examiner. Note the attached Office Action or form PTO-152.

Priority under 35 U.S.C. § 119

12)☐ Acknowledgment is made of a claim for foreign priority under 35 U.S.C. § 119(a)-(d) or (f).

a)☐ All b)☐ Some * c)☐ None of:

1.☐ Certified copies of the priority documents have been received.

2.☐ Certified copies of the priority documents have been received in Application No. _____.

3.☐ Copies of the certified copies of the priority documents have been received in this National Stage application from the International Bureau (PCT Rule 17.2(a)).

* See the attached detailed Office action for a list of the certified copies not received.

Attachment(s)

1) ☐ Notice of References Cited (PTO-892)

2) ☐ Notice of Draftsperson's Patent Drawing Review (PTO-948)

3) ☐ Information Disclosure Statement(s) (PTO-1449 or PTO/SB/08) Paper No(s)/Mail Date _____.

4) ☐ Interview Summary (PTO-413) Paper No(s)/Mail Date. _____ .

5) ☐ Notice of Informal Patent Application (PTO-152)

6) ☐ Other: _____.

DETAILED ACTION

Claim Rejections - 35 USC § 102

1. The following is a quotation of the appropriate paragraphs of 35 U.S.C. 102 that form the basis for the rejections under this section made in this Office action:

> A person shall be entitled to a patent unless –
>
> (e) the invention was described in (1) an application for patent, published under section 122(b), by another filed in the United States before the invention by the applicant for patent or (2) a patent granted on an application for patent by another filed in the United States before the invention by the applicant for patent, except that an international application filed under the treaty defined in section 351(a) shall have the effects for purposes of this subsection of an application filed in the United States only if the international application designated the United States and was published under Article 21(2) of such treaty in the English language.

2. Claims 1,6,8,9,11,13,16,17 are rejected under 35 U.S.C. 102(e) as being anticipated by Shah [US 6,441,797].

Regarding claim 1, Shah discloses a system for redistributing broadband content to a multiplicity of receiver units. Shah further discloses:

- A signal distribution for distributing a plurality of low noise amplifier and block converter (LNB) signals over a communication channel to a receiver; see Figs 1,4, col. 1, line 64 – col. 3, line 6
- a signal selector that receives a plurality of wideband signals comprising a plurality of transponder signals, the signal selector is responsive to transponder select information transmitted by the IRD and selects plurality of transponder signals from at least one broadband LNB signal based on the transponder select information; see Fig. 4 and col. 3, line 55 – col. 4, line 38
- a frequency translator coupled to the signal selector that is capable of shifting the selected narrowband signal to a predetermined carrier frequency to produce an RF signal; see Figs. 1,4, col. 2, line 66 – col. 3, line 3 and col. 4, lines 61-67

- a signal combiner coupled to at least one frequency translator capable of combining at least two RF signals to produce a composite signal whereby the composite signal is transmitted to the IRD/receiver; See Figs. 1,4 and col 3, line 55 – col. 4, line 38
- wherein the modulation of the composite signal is the same as the modulation of the broadband LNB signals and wherein the composite signal is transmitted on the coaxial cable; See Figs. 3,4 and col. 3, lines 47-54 and col. 4, lines 28-38.

Regarding claim 6, Shah discloses a signal distribution system wherein channel select information is transmitted over the same cable as the composite signal. See 122 in figs. 3,4 and col. 3, lines 47-54 and col. 4, lines 28-38.

Regarding claim 8, Shah discloses a signal distribution system for distributing signals comprising a plurality of channels from a plurality of sources between a first unit and a second unit over a communication medium comprising:

- means in the first unit responsive to information transmitted by the second unit for selecting channels from a plurality of sources and combining the selected channels into a composite signal without demodulating channels and without changing the modulation of the channels and transmitting the composite signal over the medium and means in the second unit for receiving the composite signal; see Figs. 1-4, col. 2, line 25 – col. 4, line 51
- means in the first unit and second units for bi-directionally communicating control information between both units. See col. 4, lines 28-38

Regarding claim 9, Shah further discloses a signal distribution system wherein the control information comprises channel selection requests originating from the second unit and the control information comprises channel mapping information originating from the first unit. See col. 4, lines 28-52

Regarding claim 11, Shah further discloses a signal distribution system wherein the first unit is a satellite outdoor unit (see figs. 1,2 and col. 2, lines 42 - 49) and the second unit is a satellite integrated receiver decoder unit (see figs. 1,2 and col. 2, lines 42 - 49).

Regarding claim 13, Shah further discloses signal distribution system of claim 12 wherein the means for bi-directional communicating uses the same communication medium as the composite signal. See 122 in figs. 3,4 and col. 3, lines 47-54 and col. 4, lines 28-38.

Regarding claims 16,17 Shah discloses a method further comprising frequency translating the selected transponder channels before combining. See col. 3, line 55 – col. 4, line 38

Claim Rejections - 35 USC § 103

3. The following is a quotation of 35 U.S.C. 103(a) which forms the basis for all obviousness rejections set forth in this Office action:

> (a) A patent may not be obtained though the invention is not identically disclosed or described as set forth in section 102 of this title, if the differences between the subject matter sought to be patented and the prior art are such that the subject matter as a whole would have been obvious at the time the invention was made to a person

having ordinary skill in the art to which said subject matter pertains. Patentability shall not be negatived by the manner in which the invention was made.

4. Claims 2-5,12,14,18,19,21-23 are rejected under 35 U.S.C. 103(a) as being unpatentable over Shah [US 6,441,797] in view of Williams [US 6,493,873].

Regarding claim 2, Shah discloses a method of signal distribution comprising a plurality of IRDs (see col. 3, lines 28-67 where signal distribution to multiple IRDs is discussed). See Figs. 3,4 and col. 3, lines 47-54 and col. 4, lines 28-38.

However he does not disclose a method wherein the composite signal is transmitted on a single cable connected between the signal selector and the receiver.

Williams, in the same field of endeavor, teaches a method of distributing a broadband signal received from the satellite to a multiplicity of receiving units. Williams further teaches a method wherein the composite signal is transmitted on a single cable connected between the signal selector and the receiver. See Fig. 1 and col. 3, lines 50-64; col. 10, lines 24-39.

Therefore it would have been obvious to one with ordinary skill in the art at the time the invention was made to provide the above teachings of Williams to Shah in order to provide a low cost signal distribution

Regarding claim 3, Williams further teaches a method wherein the signal selector comprises an analog to digital converter and a digital filter. See col. 17, lines 5-63.

Regarding claim 4, Williams discloses a signal distribution system wherein the signal selector comprises a tuner. See 54 in Fig.3.

Regarding claim 5, Williams teaches a method wherein the signal distribution further comprises of an integrated receiver decoder (IRD) connected to the coaxial cable with a plurality of tuners within the IRD wherein each tuner within the 1RD receives the composite signal and each tuner uses at least one transponder signal. See col. 15, line 46 – col. 16, line 26

Regarding claims 7,20 Williams further discloses a signal distribution system wherein channel select information is transmitted over a wireless link. See col. 6, lines 27-34.

Regarding claim 12, Williams further discloses a signal distribution system wherein the communication medium is a single coaxial cable connected to the satellite outdoor unit. See Fig. 1 and col. 3, lines 50-64; col. 10, lines 24-39.

Regarding claim 14, Shah discloses a method of communicating a plurality of transponder signals from a satellite outdoor unit (ODU) to integrated receiver decoders (IRDs) over a single cable connected to the ODU, the method comprising the steps of:

- communicating a transponder request signal to the ODU; col. 3, lines 47-54 and col. 4, lines 28-38
- in the ODU, selecting a transponder signal responsive to the transponder request signal and combining selected transponder signals into a composite signal and transmitting the composite signal to the receiver with the same modulation as the broadband LNB signal; see Figs. 1-4, col. 2, line 25 – col. 4, line 51

However Shah does not disclose a method wherein the composite signal is transmitted on a single cable connected between the signal selector and the receiver.

Williams, in the same field of endeavor, teaches a method of distributing a broadband signal received from the satellite to a multiplicity of receiving units. Williams further teaches a method wherein the composite signal is transmitted on a single cable connected between the signal selector and the receiver. See Fig. 1 and col. 3, lines 50-64; col. 10, lines 24-39.

Therefore it would have been obvious to one with ordinary skill in the art at the time the invention was made to provide the above teachings of Williams to Shah in order to provide a low cost signal distribution

Regarding claim 18, Williams further discloses a method further comprising the step of splitting the composite signal inside a home and distributing to a plurality of IRDs. See col. 1, lines 13-18 and col. 3, lines 50-67

Regarding claim 19, Williams further discloses a method wherein the transponder request signal is transmitted over the cable from an IRD and all IRDs receive the composite signal. See Fig. 1 and col. 3, lines 50-64; col. 10, lines 24-39.

Regarding claim 21, Williams further discloses a method comprising the steps of:

- frequency translating the selected transponder channels to a predetermined frequency before combining; . See col. 3, line 56 – col. 4, line 33, col. 6, lines 12-21, col. 9, lines 40-48, Figs. 1,3.
- splitting the composite signal inside a home and distributing to a plurality of IRDs. See col. 1, lines 13-18 and col. 3, lines 50-67

Regarding claim 22, Williams further discloses a method wherein the transponder request signal is transmitted over the cable from an IRD. See 26 in Fig.1, and col. 4, line 61 – col. 5, line 5.

Regarding claim 23 Williams further discloses a signal distribution system wherein channel select information is transmitted over a wireless link. See col. 6, lines 27-34.

5. Claim 10 is rejected under 35 U.S.C. 103(a) as being unpatentable over Shah [US 6,441,797] in view of Sao [US 6,437,837].

Regarding claim 10, Shah discloses all the limitations as claimed. However he does not disclose a method wherein the signal distribution system further comprises means for carrier offset correction.

Sao, in the same filed of endeavor, teaches a broadcast signal processing apparatus and a method in which channel interference by analog broadcast is prevented by correcting the frequency offset of the broadcast signal. See col. 2, line 10 – col. 3, line 25.

Therefore it would have been obvious to one with ordinary skill in the art at the time the invention was made to provide the above teachings of Seo to Shah in order to effectively prevent a co-channel interference thus reducing noise and improving the quality of the received signal.

6. Claim 15 is rejected under 35 U.S.C. 103(a) as being unpatentable over Shah [US 6,441,797] and Williams [US 6,493,873] in view of Lindell [US 2003/0008628].

Regarding claim 15, Shah and Williams discloses all the limitations as claimed. However, they do not explicitly disclose a method of filtering a transponder signal with a band pass filter having a bandwidth ranging from 5% to 100% wider than the bandwidth of the transponder signal

Lindell, in the same field of endeavor, teaches a method of filtering a transponder signal with a band pass filter having a bandwidth ranging from 5% to 100% wider than the bandwidth of the transponder signal. See paragraphs 100 and 113.

Therefore it would have been obvious to one with ordinary skill in the art at the time the invention was made to provide the above teachings of Lindell to modified Shah in order to minimize degradation in the signal level.

Conclusion

Any inquiry concerning this communication or earlier communications from the examiner should be directed to Sujatha Sharma whose telephone number is 571-272-7886. The examiner can normally be reached on Mon-Fri 7.30am - 4.00pm.

If attempts to reach the examiner by telephone are unsuccessful, the examiner's supervisor, Matthew D. Anderson can be reached on 571-272-4177. The fax phone number for the organization where this application or proceeding is assigned is 571-273-8300.

Information regarding the status of an application may be obtained from the Patent Application Information Retrieval (PAIR) system. Status information for published applications may be obtained from either Private PAIR or Public PAIR. Status information for unpublished applications is available through Private PAIR only. For more information about the PAIR system, see http://pair-direct.uspto.gov. Should you have questions on access to the Private PAIR system, contact the Electronic Business Center (EBC) at 866-217-9197 (toll-free).

Sujatha Sharma
March 29, 2006

Matthew Anderson
SPE 2618

Index of Claims

Application No.	Applicant(s)
10/289,011	GURANTZ ET AL.
Examiner	**Art Unit**
Sujatha Sharma	2684

√	Rejected	–	(Through numeral) Cancelled	N	Non-Elected	A	Appeal
=	Allowed	+	Restricted	I	Interference	O	Objected

Claim Final	Claim Original	Date 4/26/05	Date 10/22/05	Date 3/29/06
	1	√	√	√
	2			
	3			
	4			
	5			
	6			
	7			
	8			
	9			
	10			
	11			
	12			
	13			
	14			
	15			
	16			
	17			
	18			
	19			
	20			
	21			
	22			
	23			
	24			
	25			
	26			
	27			
	28			
	29			
	30			
	31			
	32			
	33			
	34			
	35			
	36			
	37			
	38			
	39			
	40			
	41			
	42			
	43			
	44			
	45			
	46			
	47			
	48			
	49			
	50			

Claim Final	Claim Original	Date
	51	
	52	
	53	
	54	
	55	
	56	
	57	
	58	
	59	
	60	
	61	
	62	
	63	
	64	
	65	
	66	
	67	
	68	
	69	
	70	
	71	
	72	
	73	
	74	
	75	
	76	
	77	
	78	
	79	
	80	
	81	
	82	
	83	
	84	
	85	
	86	
	87	
	88	
	89	
	90	
	91	
	92	
	93	
	94	
	95	
	96	
	97	
	98	
	99	
	100	

Claim Final	Claim Original	Date
	101	
	102	
	103	
	104	
	105	
	106	
	107	
	108	
	109	
	110	
	111	
	112	
	113	
	114	
	115	
	116	
	117	
	118	
	119	
	120	
	121	
	122	
	123	
	124	
	125	
	126	
	127	
	128	
	129	
	130	
	131	
	132	
	133	
	134	
	135	
	136	
	137	
	138	
	139	
	140	
	141	
	142	
	143	
	144	
	145	
	146	
	147	
	148	
	149	
	150	

Search Notes	Application No.	Applicant(s)	
	10/289,011	GURANTZ ET AL.	
	Examiner	Art Unit	
	Sujatha Sharma	2684	

SEARCHED			
Class	Subclass	Date	Examiner
455	3.01-3.05 103, 137 12.1, 20	4/26/05	SS
455	427	4/26/05	SS
725	64, 71 78, 98	4/26/05	SS
725	118	4/26/05	SS

INTERFERENCE SEARCHED			
Class	Subclass	Date	Examiner

SEARCH NOTES (INCLUDING SEARCH STRATEGY)		
	DATE	EXMR
Eliseo Ramos	4/19/05	SS
Nick Corsaro	3/29/06	SS

U.S. Patent and Trademark Office

Part of Paper No. 20050420

OIPE IAP22 JUL 10 2006 PATENT & TRADEMARK OFFICE

IFW 2618

PTO/SB/21 (09-04)
Approved for use through 07/31/2006. OMB 0651-0031
U.S. Patent and Trademark Office; U.S. DEPARTMENT OF COMMERCE
Under the Paperwork Reduction Act of 1995, no persons are required to respond to a collection of information unless it displays a valid OMB control number.

TRANSMITTAL FORM

(to be used for all correspondence after initial filing)

Total Number of Pages in This Submission: 14

Application Number	10/289,011
Filing Date	11/06/2002
First Named Inventor	Gurantz
Art Unit	2618
Examiner Name	Sujatha R Sharma
Attorney Docket Number	9226

ENCLOSURES *(Check all that apply)*

- ☐ Fee Transmittal Form
  - ☐ Fee Attached
- ☑ Amendment/Reply
  - ☐ After Final
  - ☐ Affidavits/declaration(s)
- ☐ Extension of Time Request
- ☐ Express Abandonment Request
- ☐ Information Disclosure Statement
- ☐ Certified Copy of Priority Document(s)
- ☐ Reply to Missing Parts/ Incomplete Application
  - ☐ Reply to Missing Parts under 37 CFR 1.52 or 1.53
- ☐ Drawing(s)
- ☐ Licensing-related Papers
- ☐ Petition
- ☐ Petition to Convert to a Provisional Application
- ☐ Power of Attorney, Revocation Change of Correspondence Address
- ☐ Terminal Disclaimer
- ☐ Request for Refund
- ☐ CD, Number of CD(s) _____
  - ☐ Landscape Table on CD
- ☐ After Allowance Communication to TC
- ☐ Appeal Communication to Board of Appeals and Interferences
- ☐ Appeal Communication to TC **(Appeal Notice, Brief, Reply Brief)**
- ☐ Proprietary Information
- ☐ Status Letter
- ☑ Other Enclosure(s) (please Identify below):

Remarks

Reply postcard

SIGNATURE OF APPLICANT, ATTORNEY, OR AGENT

Firm Name	Law Office of Michael W. Landry		
Signature	Michael W. Landry		
Printed name	Michael W. Landry		
Date	6/27/2006	Reg. No.	38,216

CERTIFICATE OF TRANSMISSION/MAILING

I hereby certify that this correspondence is being facsimile transmitted to the USPTO or deposited with the United States Postal Service with sufficient postage as first class mail in an envelope addressed to: Commissioner for Patents, P.O. Box 1450, Alexandria, VA 22313-1450 on the date shown below:

Signature	Michael W. Landry		
Typed or printed name	Michael W. Landry	Date	6/27/2006

This collection of information is required by 37 CFR 1.5. The information is required to obtain or retain a benefit by the public which is to file (and by the USPTO to process) an application. Confidentiality is governed by 35 U.S.C. 122 and 37 CFR 1.11 and1.14. This collection is estimated to 2 hours to complete, including gathering, preparing, and submitting the completed application form to the USPTO. Time will vary depending upon the individual case. Any comments on the amount of time you require to complete this form and/or suggestions for reducing this burden, should be sent to the Chief Information Officer, U.S. Patent and Trademark Office, U.S. Department of Commerce, P.O. Box 1450, Alexandria, VA 22313-1450. DO NOT SEND FEES OR COMPLETED FORMS TO THIS ADDRESS. SEND TO: **Commissioner for Patents, P.O. Box 1450, Alexandria, VA 22313-1450.**

If you need assistance in completing the form, call 1-800-PTO-9199 and select option 2.

OIPE IAP22
JUL 10 2006
PATENT & TRADEMARK OFFICE

IN THE UNITED STATES PATENT AND TRADEMARK OFFICE

Application No:	10/289,011
Filed:	11/06/2002
Applicant:	Gurantz et al.
Title:	Signal selector and combiner for broadband content distribution
Examiner/GAU:	Sujatha R Sharma / 2618
Date:	6/27/2006

Amendment and Reply

Mail Stop Amendment
Commissioner for Patents
P.O. Box 1450
Alexandria VA 22313-1450

Dear Sir:

In response to the Office Action mailed 4/5/2006, please accept the following amendments and arguments:

Claims starting on page 2.

Remarks and arguments starting on page 6.

Certificate of Mailing

I hereby certify that this correspondence is being deposited with the United States Postal Service with sufficient postage as first class mail in an envelope addressed to:

Commissioner for Patents
P.O. Box 1450
Alexandria, VA 22313-1450

Date: 6/27/06

Signed: [signature]

Name: Michael Landry

Claim Amendments:

1. (Previously amended) A signal distribution system for distributing a plurality of low noise amplifier and block converter (LNB) signals from a satellite outdoor unit (ODU) over a coaxial cable to an integrated receiver decoder (IRD) comprising:

a signal selector that receives a plurality of broadband LNB signals comprising a plurality of transponder signals, the signal selector is responsive to transponder select information transmitted by an IRD and selects a plurality of transponder signals from at least one broadband LNB signal based on the transponder select information;

a frequency translator coupled to the signal selector that is capable of shifting the selected transponder signals to new carrier frequencies to produce RF signals; and

a signal combiner coupled to at least one frequency translator capable of combining at least two RF signals to produce a composite signal;

wherein the modulation of the composite signal is the same as the modulation of the broadband LNB signals and wherein the composite signal is transmitted on the coaxial cable;

whereby the composite signal is transmitted to the IRD.

2. (Previously presented) The signal distribution system of claim 1 further comprising a plurality of IRDs and wherein the composite signal is transmitted on a single cable connected to the ODU and all IRDs receive channels extracted from the composite signal.

3. (Original) The signal distribution system of claim 1 wherein the signal selector comprises an analog to digital converter and a digital filter.

4. (Original) The signal distribution system of claim 1 wherein the signal selector comprises a tuner.

5. (Previously presented) The signal distribution system of claim 1 further comprising an integrated receiver decoder (IRD) connected to the coaxial cable with a plurality of tuners within the IRD, wherein each tuner within the IRD receives the composite signal and each tuner uses at least one transponder signal.

6. (Previously presented) The signal distribution system of claim 1 wherein transponder select information is transmitted over the same cable as the composite signal.

7. (Previously presented) The signal distribution system of claim 1 wherein transponder select information is transmitted over a wireless link.

8. (Currently amended) A signal distribution system for distributing signals comprising a plurality of channels from a plurality of sources between a first unit and a second unit over a communication medium comprising:

means in the first unit responsive to information transmitted by the second unit for extracting selected channels from each of the plurality of sources and combining the selected channels into a composite signal without demodulating channels and without changing the modulation of the channels and transmitting the composite signal over the medium; and

means in the second unit for receiving the composite signal and demodulating and decoding at least one channel; and

means in the first unit and second units for <u>bi-directionally</u> communicating control information <u>between</u> ~~from~~ the second unit ~~to~~ <u>and</u> the first unit.

9. (Original) The signal distribution system of claim 8 wherein the control information comprises channel selection requests originating from the second unit and the control information comprises channel mapping information originating from the first unit.

10. (Previously presented) The signal distribution system of claim 8, further comprising a means in the first unit for carrier offset correction.

11. (Original) The signal distribution system of claim 8 wherein the first unit is a satellite outdoor unit and the second unit is a satellite integrated receiver decoder unit.

12. (Previously presented) The signal distribution system of claim 11 wherein the communication medium consists of a single coaxial cable connected to the satellite outdoor unit.

13. (Original) The signal distribution system of claim 12 wherein the means for communicating uses the same communication medium as the composite signal.

14. (Previously presented) A method of communicating a plurality of transponder signals from a satellite outdoor unit (ODU) that receives a plurality of satellite broadband signals to an integrated receiver decoder (IRD) over a single cable connected to the ODU, the method comprising the steps of:

communicating a transponder request signal to the ODU from the IRD;

in the ODU, selecting a plurality of transponder signals extracted from the received satellite broadband signals, wherein the selecting is responsive to the transponder request signals;

combining selected transponder signals into a composite signal;

transmitting the composite signal over the single cable from the ODU to the IRDs, wherein the modulation of the transponder signal is not altered by the steps of selecting, combining, and transmitting.

15. (Previously presented) The method of claim 14 wherein the step of selecting a transponder signal comprises the step of: filtering a transponder signal with a band pass filter having a bandwidth ranging from 5% to 100% wider than the bandwidth of the transponder signal.

16. (Currently amended) The method of claim 14 wherein the step of combining comprises frequency translating the selected transponder channels to a variable frequency before combining.

17. (Previously presented) The method of claim 15 further comprising frequency translating the selected transponder channels to a predetermined frequency before combining.

18. (Original) The method of claim 14 further comprising the step of splitting the composite signal inside a home and distributing to a plurality of IRDs.

19. (Previously presented) The method of claim 14 wherein the transponder request signal is transmitted over the cable from an IRD and all IRDs receive the same composite signal.

20. (Original) The method of claim 14 wherein the transponder request signal is transmitted over a wireless link to the ODU.

21. (Currently amended) The method of claim 14 further comprising the steps of:

frequency translating the selected transponder channels to a ~~predetermined~~ variable frequency before combining; and

splitting the composite signal inside a home and distributing to a plurality of IRDs.

22. (Original) The method of claim 21 wherein the transponder request signal is transmitted over the cable from an IRD.

23. (Original) The method of claim 21 wherein the transponder request signal is transmitted over a wireless link to the ODU.

Remarks/Arguments

An interview was conducted with Examiner Sharma on June 14, 2006 to discuss the rejections. The discussion included an explanation of the distinction between the claimed invention and the Shah reference. Specifically, it was explained that the Shaw reference uses a conventional multi-switch (128) controlled by an IRD to connect one of the input cables to one of the output cables (Shah col. 4, lines 29-38). A whole wideband source that comprises many transponder channels is selected by the multi-switch. The multi-switch does not select individual transponder channels under control of an IRD. Individual transponder channel within the wideband signal are not selected by the multi-switch. In Shah, certain fixed transponders are relocated and masked (col. 4, lines 5-10). There is no programmability or control over the transponders selected or the relocated frequency; it is fixed. The relocation and masking in Shah is not responsive to signals from the IRDs, only the multi-switch, which select a wideband signal, is responsive to signals from the IRDs.

Applicant's claims include the limitation of transponder selection responsive to a signal transmitted by an IRD. This limitation is not found in Shah.

Each of the cited references has been reviewed and the rejections made to the claims have been considered. Claims are amended and arguments made to point out patentability of the claims.

Claims

Claims 1-23 remain in the application. Claims 8, 16, and 21 are currently amended. Reconsideration of the rejections is respectfully requested in view of the amendments and the following arguments.

Rejections under 35 U.S.C. 102

The Examiner has rejected claims 1, 6, 8, 9, 11, 13, 16, 17, under 35 U.S.C. 102 as being anticipated by Shah (U.S. 6,441,797). Reconsideration of the rejections is requested in light of the clarifications about Shah made during the interview and the detailed explanation below.

Shah discloses a system for combining some transponder channels from one LNB output with the transponder channels from another LNB output, overlaying the selected channels of the first LNB into an unused portion of the second LNB output. The combined signal is a fixed combination of transponder channels from the two source LNBs. The combined LNB signals then feeds a multi-switch, which has several inputs and several outputs. The multi-switch selects an entire LNB (or combined LNB) output under control of a signal received from an IRD through one of the several cables connected to one of the several multi-switch outputs. Each IRD can select a different satellite/LNB output (representing a full set of satellite transponder signals). The multi-switch in Shah selects an entire band of transponder channels from one LNB or the combined LNB signal to route to an IRD connected to one of the several multi-switch outputs. The IRD command to the multi-port switch can select a full satellite/LNB or full combined LNB signal. **There is no provision in Shah for the IRD to command, request, or select individual transponder channels. There is no mechanism disclosed in Shah for operating the selection of the transponder channels or the combiner under the control of the IRDs. The combiner in Shah is not operating under control of an IRD, only the multi-switch is controlled by the IRDs.** The outdoor unit (ODU) in Shah, through its multi-switch, selects full satellite/LNB signals in response to IRD commands. The ODU of Shah, through its multi-port switch, has several cables connecting from the ODU to the IRDs inside the building. Several cables run from the multi-switch, one for each of the IRDs in the building. Each IRD receives its own unique signal on its own cable from the ODU/multi-switch, although if two IRDs are commanding the same satellite signal, the signals each IRD receives will be a duplicate signal but sent over a separate cable.

In summary, the disclosure of Shah teaches multiple cables running from the ODU to the IRDs; the IRDs select a full satellite/LNB signal to be transmitted in its corresponding cable; and **the IRD control of the multi-switch selects full satellite/LNB signals, not individual transponder signals**. **The transponder combiner is fixed**, the combined signal is a fixed set of transponder channels received from two or more satellites, **and the combined signal does not change in response to IRD select signals or commands**. The selection of a cable connection at the multi-switch by the IRD does not influence the transponder selection, relocation, or combining.

In the applicants' invention, a single cable can run from the selector and combiner, which can be in the ODU, to the inside of the building. The signal is split inside the building using a gateway or splitter device to distribute a composite signal to IRDs. The IRD commands to the selector requests individual transponder signals from the satellite signals output by any one of the LNBs. The signal selector selects the transponder signals requested from each IRD, combines all of the selected transponder signals into a composite signal, then transmits the composite signal into the building and to the IRDs. Each IRD can receive the same composite signal, sent preferably over a single cable, and tunes its requested transponder signal for decoding and display on a television connected to the IRD. The composite signal changes based on the collection of transponder select signals from each of the IRDs. In Shah, a different signal is sent to each IRD over a separate cable for each IRD. In Shah, the combined signal does not change with the LNB select signals from each of the IRDs.

The claims have been previously amended to address the rejections based on Shah, adding elements and clarifying the scope of the claims to make the claims clearly patentable over Shah.

Previous rejections based on Williams (U.S. 6,493,873) were addressed in previous amendments incorporating the limitation into each claim of <u>wherein the modulation of the composite signal is the same as the modulation of the broadband LNB signals</u> or similar language. Williams transmodulated the LNB signals, converting QPSK to QAM, the applicant's invention does not transmodulate, this limitation is still reflected in the current claims by the previous amendments.

Claim 1 has been previously amended to incorporate the limitations that <u>the signal selector is responsive to **transponder** select information transmitted by an integrated receiver decoder (IRD)</u>, that the selection is <u>responsive to</u> and <u>based on the **transponder** select information</u>. Shah does not teach a transponder selector or combiner responsive to IRD commands.

It should be noted further that in Shah, the frequency translator is part of the LNB, whereas in the applicant's invention and claim, the frequency translator operates on the signal output from the LNB, as recited in the claim.

Applicant believes that Claim 1 is patentable over Shah and allowance is respectfully requested.

Regarding claim 6, in light of the arguments of claim 1 upon which this claim depends, this claim should be allowable. Further, claim 6 has the limitation of "transponder select information", Shah does not disclose "transponder select information" transmitted by the IRD, but only discloses "cable select" transmitted by the IRD.

Claim 8 has been previously amended to include the limitation responsive to information transmitted by the second unit for extracting selected channels and combining the selected channels, in order to distinguish the claim from Shah. In Shah, the selecting and combining transponders in the first unit is fixed and not responsive to information transmitted from a second unit. The control in Shah does not affect the extraction or combining of transponders, but only affects which LNB output is made available to a particular IRD. The selection at the multi-switch controlled by IRDs in Shah can select the combined signal or an unaltered LNB output, but cannot control the selection of channels combined into a composite signal.

Further, claim 8 has been amended to include the limitation of bi-directionally communicating control information. This limitation appeared in the original claim, was previously removed, and is presently added back. In Shah, control information is not communicated bi-directionally, but only from the IRD to the outdoor unit for the purpose of selecting a cable at the multi-switch.

Claim 9 has the limitation of control information comprising channel selection requests from the second unit (the IRD) and channel mapping information from the first unit (the ODU). Shah does not disclose channel mapping information as part of control information. Further, such communication is not possible in Shah because the first unit does not transmit control information.

Claims 8 and 9 are not anticipated by Shah and should be allowed.

Regarding claim 11, in light of the arguments of claim 8 upon which this claim depends, this claim should be allowable.

Regarding claim 13, in light of the arguments of claim 8 upon which this claims depends, this claim should be allowable. Further, Shah does not disclose bi-directional communication of control information as included in a claim limitation.

Claim 16 has been amended to include the limitation of translating to a variable frequency. Support for this amendment is found in the application page 8 lines 10-12. Shah relocates transponders to a fixed frequency.

Regarding claims 16 and 17, in light of the arguments of claim 8 upon which these claims depend, these claim should be allowable.

Rejections under 35 U.S.C. 103

The Examiner rejected claims 2-5, 12, 14, 18, 19, and 21-23 under 35 U.S.C. 103(a) as being unpatentable over Shah (U.S. 6,441,797) in view of Williams (U.S. 6,493,873).

Regarding the rejected dependent claims, except independent claim 14, in light of the amendments and arguments to the independent claims upon which these claims depend, these dependent claims should be allowable along with the independent claims.

Further, regarding claims 2 and 12, Williams discloses a transmodulation technique to compress the bandwidth of signals that is essential, in the Williams approach, for transmitting many signals from several LNB outputs over a single cable. The disclosure of Shah uses multiple cables for distribution to IRDs with fixed transponder relocation from one LNB to unused spots of a different LNB output. There is no motivation to combine the single cable teaching of Williams with the multiple cable approach of Shah. Viewing these dependent claims along with the limitations of claim 1 and 8, Williams and Shah do not disclose all the limitations of claim 1 and 8, or the dependent claims depending on claim 1 and 8.

Claim 14 was rejected based on Shah in view of Williams. Claim 14 includes the limitation "responsive to transponder request signal" Shah does not disclose a selector responsive to a transponder request signal, but only a cable select signal, as discussed above. Regarding the "single cable" limitation disclosed in Williams, see the argument for claims 2 and 12 above. There would be no motivation to combine the single cable teaching of Williams with the fixed transponder and multiple cable teaching of Shah. All the limitations of claim 14 are not found in Shah and Williams.

Claim 21 has been amended to include the limitation of translating the selected transponder channels to a variable frequency. Support for this amendment is found in the application page 8 lines 10-12. Shah relocates transponders to a fixed frequency. All the limitations of claim 21 are not found in Shah and Williams.

The Examiner rejected claim 10 under 35 U.S.C. 103(a) as being unpatentable over Shah (U.S. 6,441,797) in view of Seo (U.S. 6,437,837). In light of the amendments and arguments to the independent claim 8 upon which this claim depends, this claim should be allowable along with the independent claim. Further, claim 10 has previously been amended to include the limitation that the frequency offset is performed in the first unit containing the selector and combiner to distinguish from Seo, where offset correction is performed in a television.

The important distinction between Seo and the present claimed invention is that Seo teaches a method of preventing **co-channel** interference, specifically, when an analog television channel is **occupying the same frequency** as a digital television channel.

The present invention uses frequency offset to avoid **adjacent channel** interference. Adjacent channels are not occupying the same frequency but are next to each other in the band. Additionally, Seo's technique is employed in the TV receiver. The frequency offset of the present invention takes place in the selector/combiner

Seo discloses an apparatus and method of preventing co-channel interference of an analog television broadcast channel into the processing of a digital television broadcast channel. The disclosure of Seo describes a technique employed in a television receiver by using an NTSC rejection filter (NRF) to

reject an analog/NTSC television signal that is transmitted from a distant location at the same channel frequency as a local digital television signal. The NRF is only effective if the frequency offset of the analog transmission is within an allowable error range. The disclosure in Seo describes detecting the carrier offset of the analog broadcast signal then adjusting the local oscillator of the tuner to result in a tuned signal that has the proper frequency alignment in order for the NRF to reject the analog signal. The rejection of the analog signal results in less noise in the digital broadcast signal. The technique of Seo is entirely in the television receiver to remove interference from an analog signal that is co-channel, that is, sharing the same frequency channel with a digital signal.

To establish a prima facie case of obviousness, three basic criteria must be met. First, there must be some suggestion or motivation, either in the references themselves or in the knowledge generally available to one of ordinary skill in the art, to modify the reference or to combine reference teachings. Second, there must be a reasonable expectation of success. Finally, the prior art reference (or references when combined) must teach or suggest all the claim limitations. The teaching or suggestion to make the claimed combination and the reasonable expectation of success must both be found in the prior art, not in applicant's disclosure. In re Vaeck, 947 F.2d 488, 20 USPQ2d 1438 (Fed. Cir. 1991). See MPEP section 2143.

The carrier offset correction of the present invention, and as recited in claim 10, is not performed in a television receiver, as disclosed in Seo. The present invention employs carrier offset correction to properly filter the selected signals and **to avoid interference with adjacent channels** (application page 11 line 25 to page 12 line 8), **not co-channel interference** as in Seo. There is no suggestion or motivation to modify the teaching of Shah or Seo to incorporate carrier offset correction into a signal selector and combiner. Shah does not recognize the problem of carrier offset creating the potential for overlapping transponders when combining. Shah does not disclose a technique for controlling the LO to affect carrier offset. In Seo, there is no signal selecting and combining operation and no suggestion of application of the teaching of Seo to signal selecting and combining. There would be no expectation of success of applying the teaching of Seo with the teaching of Shah because the techniques of each reference are inapplicable to each other.

The Examiner rejected claim 15 under 35 U.S.C. 103(a) as being unpatentable over Shah and Williams in view of Lindell (U.S. 2003/0008628). In light of the amendments and arguments to the independent claim 14 upon which this claim depends, this claim should be allowable along with the independent claim.

Conclusion

In view of the foregoing, claims 1-23 as amended are in condition for allowance and such action is respectfully requested.

If it is felt that direct communication would serve to advance prosecution of this case, the examiner is invited to call the attorney at the below listed telephone number.

Date: 6/27/2006

Respectfully submitted,

Michael W. Landry

Michael W. Landry
Attorney for Applicants
Reg. No. 38,216
5098 Seachase St.
San Diego CA 92130
858-229-6801
mlandry@iprsolutions.com

PATENT APPLICATION FEE DETERMINATION RECORD
Effective October 1, 2001

Application or Docket Number
10/289011
1226

1.8.14

CLAIMS AS FILED - PART I

	(Column 1)	(Column 2)
TOTAL CLAIMS	23	
FOR	NUMBER FILED	NUMBER EXTRA
TOTAL CHARGEABLE CLAIMS	23 minus 20=	* 3
INDEPENDENT CLAIMS	3 minus 3 =	* 0
MULTIPLE DEPENDENT CLAIM PRESENT		☐

* If the difference in column 1 is less than zero, enter "0" in column 2

SMALL ENTITY TYPE ☐		OR	OTHER THAN SMALL ENTITY	
RATE	FEE		RATE	FEE
BASIC FEE	370.00	OR	BASIC FEE	740.00
X$ 9=	27	OR	X$18=	
X42=	0	OR	X84=	
+140=	0	OR	+280=	
TOTAL	397	OR	TOTAL	

8/11/05

CLAIMS AS AMENDED - PART II

AMENDMENT A	(Column 1) CLAIMS REMAINING AFTER AMENDMENT		(Column 2) HIGHEST NUMBER PREVIOUSLY PAID FOR	(Column 3) PRESENT EXTRA
Total	* 23	Minus	** 23	* 0
Independent	* 3	Minus	*** 3	* 0
FIRST PRESENTATION OF MULTIPLE DEPENDENT CLAIM				☐

SMALL ENTITY		OR	OTHER THAN SMALL ENTITY	
RATE	ADDITIONAL FEE		RATE	ADDITIONAL FEE
X$ 9=		OR	X$18=	
X42=		OR	X84=	
+140=		OR	+280=	
TOTAL ADDIT. FEE		OR	TOTAL ADDIT. FEE	

RCE filed
1/25/06

AMENDMENT B	(Column 1) CLAIMS REMAINING AFTER AMENDMENT		(Column 2) HIGHEST NUMBER PREVIOUSLY PAID FOR	(Column 3) PRESENT EXTRA
Total	* 23	Minus	** 23	* 0
Independent	* 3	Minus	*** 3	* 0
FIRST PRESENTATION OF MULTIPLE DEPENDENT CLAIM				☐

RATE	ADDITIONAL FEE		RATE	ADDITIONAL FEE
X$ 9=		OR	X$18=	
X42=		OR	X84=	
+140=		OR	+280=	
TOTAL ADDIT. FEE		OR	TOTAL ADDIT. FEE	

7-10-06

AMENDMENT C	(Column 1) CLAIMS REMAINING AFTER AMENDMENT		(Column 2) HIGHEST NUMBER PREVIOUSLY PAID FOR	(Column 3) PRESENT EXTRA
Total	* 23	Minus	** 23	* 0
Independent	* 3	Minus	*** 3	* 0
FIRST PRESENTATION OF MULTIPLE DEPENDENT CLAIM				☐

RATE	ADDITIONAL FEE		RATE	ADDITIONAL FEE
X$ 9=		OR	X$18=	
X42=		OR	X84=	
+140=		OR	+280=	
TOTAL ADDIT. FEE		OR	TOTAL ADDIT. FEE	

* If the entry in column 1 is less than the entry in column 2, write "0" in column 3.
** If the "Highest Number Previously Paid For" IN THIS SPACE is less than 20, enter "20."
*** If the "Highest Number Previously Paid For" IN THIS SPACE is less than 3, enter "3."
The "Highest Number Previously Paid For" (Total or Independent) is the highest number found in the appropriate box in column 1.

FORM PTO-875 (Rev. 6/01) Patent and Trademark Office, U.S. DEPARTMENT OF COMMERCE

UNITED STATES PATENT AND TRADEMARK OFFICE

UNITED STATES DEPARTMENT OF COMMERCE
United States Patent and Trademark Office
Address: COMMISSIONER FOR PATENTS
P.O. Box 1450
Alexandria, Virginia 22313-1450
www.uspto.gov

NOTICE OF ALLOWANCE AND FEE(S) DUE

24244 7590 09/11/2006

MICHAEL W LANDRY
5098 SEACHASE STREET
SAN DIEGO, CA 92130

EXAMINER	
SHARMA, SUJATHA R	
ART UNIT	PAPER NUMBER
2618	

DATE MAILED: 09/11/2006

APPLICATION NO.	FILING DATE	FIRST NAMED INVENTOR	ATTORNEY DOCKET NO.	CONFIRMATION NO.
10/289,011	11/06/2002	Itzhak Gurantz	9226	9030

TITLE OF INVENTION: SIGNAL SELECTOR AND COMBINER FOR BROADBAND CONTENT DISTRIBUTION

APPLN. TYPE	SMALL ENTITY	ISSUE FEE DUE	PUBLICATION FEE DUE	PREV. PAID ISSUE FEE	TOTAL FEE(S) DUE	DATE DUE
nonprovisional	YES	$700	$0	$0	$700	12/11/2006

THE APPLICATION IDENTIFIED ABOVE HAS BEEN EXAMINED AND IS ALLOWED FOR ISSUANCE AS A PATENT. PROSECUTION ON THE MERITS IS CLOSED. THIS NOTICE OF ALLOWANCE IS NOT A GRANT OF PATENT RIGHTS. THIS APPLICATION IS SUBJECT TO WITHDRAWAL FROM ISSUE AT THE INITIATIVE OF THE OFFICE OR UPON PETITION BY THE APPLICANT. SEE 37 CFR 1.313 AND MPEP 1308.

THE ISSUE FEE AND PUBLICATION FEE (IF REQUIRED) MUST BE PAID WITHIN THREE MONTHS FROM THE MAILING DATE OF THIS NOTICE OR THIS APPLICATION SHALL BE REGARDED AS ABANDONED. THIS STATUTORY PERIOD CANNOT BE EXTENDED. SEE 35 U.S.C. 151. THE ISSUE FEE DUE INDICATED ABOVE DOES NOT REFLECT A CREDIT FOR ANY PREVIOUSLY PAID ISSUE FEE IN THIS APPLICATION. IF AN ISSUE FEE HAS PREVIOUSLY BEEN PAID IN THIS APPLICATION (AS SHOWN ABOVE), THE RETURN OF PART B OF THIS FORM WILL BE CONSIDERED A REQUEST TO REAPPLY THE PREVIOUSLY PAID ISSUE FEE TOWARD THE ISSUE FEE NOW DUE.

HOW TO REPLY TO THIS NOTICE:

I. Review the SMALL ENTITY status shown above.

If the SMALL ENTITY is shown as YES, verify your current SMALL ENTITY status:

A. If the status is the same, pay the TOTAL FEE(S) DUE shown above.

B. If the status above is to be removed, check box 5b on Part B - Fee(s) Transmittal and pay the PUBLICATION FEE (if required) and twice the amount of the ISSUE FEE shown above, or

If the SMALL ENTITY is shown as NO:

A. Pay TOTAL FEE(S) DUE shown above, or

B. If applicant claimed SMALL ENTITY status before, or is now claiming SMALL ENTITY status, check box 5a on Part B - Fee(s) Transmittal and pay the PUBLICATION FEE (if required) and 1/2 the ISSUE FEE shown above.

II. PART B - FEE(S) TRANSMITTAL, or its equivalent, must be completed and returned to the United States Patent and Trademark Office (USPTO) with your ISSUE FEE and PUBLICATION FEE (if required). If you are charging the fee(s) to your deposit account, section "4b" of Part B - Fee(s) Transmittal should be completed and an extra copy of the form should be submitted. If an equivalent of Part B is filed, a request to reapply a previously paid issue fee must be clearly made, and delays in processing may occur due to the difficulty in recognizing the paper as an equivalent of Part B.

III. All communications regarding this application must give the application number. Please direct all communications prior to issuance to Mail Stop ISSUE FEE unless advised to the contrary.

IMPORTANT REMINDER: Utility patents issuing on applications filed on or after Dec. 12, 1980 may require payment of maintenance fees. It is patentee's responsibility to ensure timely payment of maintenance fees when due.

PTOL-85 (Rev. 07/06) Approved for use through 04/30/2007.

PART B - FEE(S) TRANSMITTAL

Complete and send this form, together with applicable fee(s), to: Mail **Mail Stop ISSUE FEE**
Commissioner for Patents
P.O. Box 1450
Alexandria, Virginia 22313-1450
or Fax (571)-273-2885

INSTRUCTIONS: This form should be used for transmitting the ISSUE FEE and PUBLICATION FEE (if required). Blocks 1 through 5 should be completed where appropriate. All further correspondence including the Patent, advance orders and notification of maintenance fees will be mailed to the current correspondence address as indicated unless corrected below or directed otherwise in Block 1, by (a) specifying a new correspondence address; and/or (b) indicating a separate "FEE ADDRESS" for maintenance fee notifications.

CURRENT CORRESPONDENCE ADDRESS (Note: Use Block 1 for any change of address)

24244 7590 09/11/2006

MICHAEL W LANDRY
5098 SEACHASE STREET
SAN DIEGO, CA 92130

Note: A certificate of mailing can only be used for domestic mailings of the Fee(s) Transmittal. This certificate cannot be used for any other accompanying papers. Each additional paper, such as an assignment or formal drawing, must have its own certificate of mailing or transmission.

Certificate of Mailing or Transmission

I hereby certify that this Fee(s) Transmittal is being deposited with the United States Postal Service with sufficient postage for first class mail in an envelope addressed to the Mail Stop ISSUE FEE address above, or being facsimile transmitted to the USPTO (571) 273-2885, on the date indicated below.

(Depositor's name)
(Signature)
(Date)

APPLICATION NO.	FILING DATE	FIRST NAMED INVENTOR	ATTORNEY DOCKET NO.	CONFIRMATION NO.
10/289,011	11/06/2002	Itzhak Gurantz	9226	9030

TITLE OF INVENTION: SIGNAL SELECTOR AND COMBINER FOR BROADBAND CONTENT DISTRIBUTION

APPLN. TYPE	SMALL ENTITY	ISSUE FEE DUE	PUBLICATION FEE DUE	PREV. PAID ISSUE FEE	TOTAL FEE(S) DUE	DATE DUE
nonprovisional	YES	$700	$0	$0	$700	12/11/2006

EXAMINER	ART UNIT	CLASS-SUBCLASS
SHARMA, SUJATHA R	2618	455-003040

1. Change of correspondence address or indication of "Fee Address" (37 CFR 1.363).
   - ☐ Change of correspondence address (or Change of Correspondence Address form PTO/SB/122) attached.
   - ☐ "Fee Address" indication (or "Fee Address" Indication form PTO/SB/47; Rev 03-02 or more recent) attached. **Use of a Customer Number is required.**

2. For printing on the patent front page, list
   (1) the names of up to 3 registered patent attorneys or agents OR, alternatively,
   (2) the name of a single firm (having as a member a registered attorney or agent) and the names of up to 2 registered patent attorneys or agents. If no name is listed, no name will be printed.
   1 _____
   2 _____
   3 _____

3. ASSIGNEE NAME AND RESIDENCE DATA TO BE PRINTED ON THE PATENT (print or type)

PLEASE NOTE: Unless an assignee is identified below, no assignee data will appear on the patent. If an assignee is identified below, the document has been filed for recordation as set forth in 37 CFR 3.11. Completion of this form is NOT a substitute for filing an assignment.

(A) NAME OF ASSIGNEE (B) RESIDENCE: (CITY and STATE OR COUNTRY)

Please check the appropriate assignee category or categories (will not be printed on the patent) : ☐ Individual ☐ Corporation or other private group entity ☐ Government

4a. The following fee(s) are submitted:
- ☐ Issue Fee
- ☐ Publication Fee (No small entity discount permitted)
- ☐ Advance Order - # of Copies _____

4b. Payment of Fee(s): **(Please first reapply any previously paid issue fee shown above)**
- ☐ A check is enclosed.
- ☐ Payment by credit card. Form PTO-2038 is attached.
- ☐ The Director is hereby authorized to charge the required fee(s), any deficiency, or credit any overpayment, to Deposit Account Number _____ (enclose an extra copy of this form).

5. **Change in Entity Status** (from status indicated above)
- ☐ a. Applicant claims SMALL ENTITY status. See 37 CFR 1.27.
- ☐ b. Applicant is no longer claiming SMALL ENTITY status. See 37 CFR 1.27(g)(2).

NOTE: The Issue Fee and Publication Fee (if required) will not be accepted from anyone other than the applicant; a registered attorney or agent; or the assignee or other party in interest as shown by the records of the United States Patent and Trademark Office.

Authorized Signature _____ Date _____

Typed or printed name _____ Registration No. _____

This collection of information is required by 37 CFR 1.311. The information is required to obtain or retain a benefit by the public which is to file (and by the USPTO to process) an application. Confidentiality is governed by 35 U.S.C. 122 and 37 CFR 1.14. This collection is estimated to take 12 minutes to complete, including gathering, preparing, and submitting the completed application form to the USPTO. Time will vary depending upon the individual case. Any comments on the amount of time you require to complete this form and/or suggestions for reducing this burden, should be sent to the Chief Information Officer, U.S. Patent and Trademark Office, U.S. Department of Commerce, P.O. Box 1450, Alexandria, Virginia 22313-1450. DO NOT SEND FEES OR COMPLETED FORMS TO THIS ADDRESS. SEND TO: Commissioner for Patents, P.O. Box 1450, Alexandria, Virginia 22313-1450.

Under the Paperwork Reduction Act of 1995, no persons are required to respond to a collection of information unless it displays a valid OMB control number.

UNITED STATES PATENT AND TRADEMARK OFFICE

UNITED STATES DEPARTMENT OF COMMERCE
United States Patent and Trademark Office
Address: COMMISSIONER FOR PATENTS
P.O. Box 1450
Alexandria, Virginia 22313-1450
www.uspto.gov

APPLICATION NO.	FILING DATE	FIRST NAMED INVENTOR	ATTORNEY DOCKET NO.	CONFIRMATION NO.
10/289,011	11/06/2002	Itzhak Gurantz	9226	9030

24244 7590 09/11/2006

MICHAEL W LANDRY
5098 SEACHASE STREET
SAN DIEGO, CA 92130

EXAMINER
SHARMA, SUJATHA R

ART UNIT	PAPER NUMBER
2618	

DATE MAILED: 09/11/2006

Determination of Patent Term Adjustment under 35 U.S.C. 154 (b)
(application filed on or after May 29, 2000)

The Patent Term Adjustment to date is 515 day(s). If the issue fee is paid on the date that is three months after the mailing date of this notice and the patent issues on the Tuesday before the date that is 28 weeks (six and a half months) after the mailing date of this notice, the Patent Term Adjustment will be 515 day(s).

If a Continued Prosecution Application (CPA) was filed in the above-identified application, the filing date that determines Patent Term Adjustment is the filing date of the most recent CPA.

Applicant will be able to obtain more detailed information by accessing the Patent Application Information Retrieval (PAIR) WEB site (http://pair.uspto.gov).

Any questions regarding the Patent Term Extension or Adjustment determination should be directed to the Office of Patent Legal Administration at (571)-272-7702. Questions relating to issue and publication fee payments should be directed to the Customer Service Center of the Office of Patent Publication at 1-(888)-786-0101 or (571)-272-4200.

PTOL-85 (Rev. 07/06) Approved for use through 04/30/2007.

Notice of Allowability	Application No.	Applicant(s)	
	10/289,011	GURANTZ ET AL.	
	Examiner	Art Unit	
	Sujatha Sharma	2618	

-- The MAILING DATE of this communication appears on the cover sheet with the correspondence address--

All claims being allowable, PROSECUTION ON THE MERITS IS (OR REMAINS) CLOSED in this application. If not included herewith (or previously mailed), a Notice of Allowance (PTOL-85) or other appropriate communication will be mailed in due course. **THIS NOTICE OF ALLOWABILITY IS NOT A GRANT OF PATENT RIGHTS.** This application is subject to withdrawal from issue at the initiative of the Office or upon petition by the applicant. See 37 CFR 1.313 and MPEP 1308.

1. ☒ This communication is responsive to *7/18/06*.

2. ☒ The allowed claim(s) is/are *1-23*.

3. ☐ Acknowledgment is made of a claim for foreign priority under 35 U.S.C. § 119(a)-(d) or (f).
   a) ☐ All b) ☐ Some* c) ☐ None of the:
      1. ☐ Certified copies of the priority documents have been received.
      2. ☐ Certified copies of the priority documents have been received in Application No. _____ .
      3. ☐ Copies of the certified copies of the priority documents have been received in this national stage application from the International Bureau (PCT Rule 17.2(a)).

   * Certified copies not received: _____.

Applicant has THREE MONTHS FROM THE "MAILING DATE" of this communication to file a reply complying with the requirements noted below. Failure to timely comply will result in ABANDONMENT of this application.
THIS THREE-MONTH PERIOD IS NOT EXTENDABLE.

4. ☐ A SUBSTITUTE OATH OR DECLARATION must be submitted. Note the attached EXAMINER'S AMENDMENT or NOTICE OF INFORMAL PATENT APPLICATION (PTO-152) which gives reason(s) why the oath or declaration is deficient.

5. ☐ CORRECTED DRAWINGS (as "replacement sheets") must be submitted.
   (a) ☐ including changes required by the Notice of Draftsperson's Patent Drawing Review (PTO-948) attached
      1) ☐ hereto or 2) ☐ to Paper No./Mail Date _____.
   (b) ☐ including changes required by the attached Examiner's Amendment / Comment or in the Office action of Paper No./Mail Date _____.

   Identifying indicia such as the application number (see 37 CFR 1.84(c)) should be written on the drawings in the front (not the back) of each sheet. Replacement sheet(s) should be labeled as such in the header according to 37 CFR 1.121(d).

6. ☐ DEPOSIT OF and/or INFORMATION about the deposit of BIOLOGICAL MATERIAL must be submitted. Note the attached Examiner's comment regarding REQUIREMENT FOR THE DEPOSIT OF BIOLOGICAL MATERIAL.

Attachment(s)

1. ☐ Notice of References Cited (PTO-892)
2. ☐ Notice of Draftperson's Patent Drawing Review (PTO-948)
3. ☐ Information Disclosure Statements (PTO/SB/08), Paper No./Mail Date _____
4. ☐ Examiner's Comment Regarding Requirement for Deposit of Biological Material
5. ☐ Notice of Informal Patent Application
6. ☐ Interview Summary (PTO-413), Paper No./Mail Date _____ .
7. ☐ Examiner's Amendment/Comment
8. ☒ Examiner's Statement of Reasons for Allowance
9. ☐ Other _____.

Allowable Subject Matter

1. Applicant's arguments, filed 7/18/06 with respect to claims 1-23 have been fully considered and are persuasive. The rejection of claims from previous office action (mailed on 4/5/06) has been withdrawn in view of the arguments filed on 7/18/06, pages 6-12.

Therefore claims 1-23 is allowed.

Conclusion

Any inquiry concerning this communication or earlier communications from the examiner should be directed to Sujatha Sharma whose telephone number is 571-272-7886. The examiner can normally be reached on Mon-Fri 7.30am - 4.00pm.

If attempts to reach the examiner by telephone are unsuccessful, the examiner's supervisor, Matthew D. Anderson can be reached on 571-272-4177. The fax phone number for the organization where this application or proceeding is assigned is 571-273-8300.

Information regarding the status of an application may be obtained from the Patent Application Information Retrieval (PAIR) system. Status information for published applications may be obtained from either Private PAIR or Public PAIR. Status information for unpublished applications is available through Private PAIR only. For more information about the PAIR system, see http://pair-direct.uspto.gov. Should you have questions on access to the Private PAIR system, contact the Electronic Business Center (EBC) at 866-217-9197 (toll-free). If you would like assistance from a USPTO Customer Service Representative or access to the automated information system, call 800-786-9199 (IN USA OR CANADA) or 571-272-1000

Sujatha Sharma
September 1, 2006

Matthew D. Anderson
Supervisory Patent Examiner

Issue Classification	Application/Control No.	Applicant(s)/Patent under Reexamination	
	10/289,011	GURANTZ ET AL.	
	Examiner	Art Unit	
	Sujatha Sharma	2618	

ISSUE CLASSIFICATION

ORIGINAL		CROSS REFERENCE(S)							
CLASS	SUBCLASS	CLASS	SUBCLASS (ONE SUBCLASS PER BLOCK)						
455	3.02	455	3.01	3.04	427				
INTERNATIONAL CLASSIFICATION		725	71	78					
H04H 1/00									
/									
/									
/									
/									

Sujatha Sharma 9/1/06
(Assistant Examiner) (Date)

DONBE Hopkins 9/7/06
(Legal Instruments Examiner) (Date)

Matthew D. Anderson
Supervisory Patent Examiner
(Primary Examiner) (Date) 9/1/06

Total Claims Allowed: 23

O.G. Print Claim(s)	O.G. Print Fig.
1	2

☒ Claims renumbered in the same order as presented by applicant ☐ CPA ☐ T.D. ☐ R.1.47

Final	Original	Final	Original	Final	Original	Final	Original	Final	Original	Final	Original
1	1		31		61		91		121		151		181
2	2		32		62		92		122		152		182
3	3		33		63		93		123		153		183
4	4		34		64		94		124		154		184
5	5		35		65		95		125		155		185
6	6		36		66		96		126		156		186
7	7		37		67		97		127		157		187
8	8		38		68		98		128		158		188
9	9		39		69		99		129		159		189
10	10		40		70		100		130		160		190
11	11		41		71		101		131		161		191
12	12		42		72		102		132		162		192
13	13		43		73		103		133		163		193
14	14		44		74		104		134		164		194
15	15		45		75		105		135		165		195
16	16		46		76		106		136		166		196
17	17		47		77		107		137		167		197
18	18		48		78		108		138		168		198
19	19		49		79		109		139		169		199
20	20		50		80		110		140		170		200
21	21		51		81		111		141		171		201
22	22		52		82		112		142		172		202
23	23		53		83		113		143		173		203
	24		54		84		114		144		174		204
	25		55		85		115		145		175		205
	26		56		86		116		146		176		206
	27		57		87		117		147		177		207
	28		58		88		118		148		178		208
	29		59		89		119		149		179		209
	30		60		90		120		150		180		210

Search Notes	Application No.	Applicant(s)
	10/289,011	GURANTZ ET AL.
	Examiner: Sujatha Sharma	Art Unit: 2684

SEARCHED

Class	Subclass	Date	Examiner
455	3.01-3.05, 103, 137, 12.1, 20	4/26/05	SS
455	427	4/26/05	SS
725	64, 71, 78, 98	4/26/05	SS
725	118	4/26/05	SS
updated search		8/30/06	SS

INTERFERENCE SEARCHED

Class	Subclass	Date	Examiner
455	427	8/30/06	SS
	3.02, 3.04	↓	↓
725	71, 78	↓	↓

SEARCH NOTES (INCLUDING SEARCH STRATEGY)

	DATE	EXMR
Eliseo Ramos	4/19/05	SS
Nick Corsaro	3/29/06	SS
Nick Corsaro	8/30/06	SS
Lewis West (discussed with above regarding allowability)	8/30/06	SS

U.S. Patent and Trademark Office

Part of Paper No. 20050420

Index of Claims

Application No.	Applicant(s)
10/289,011	GURANTZ ET AL.
Examiner	**Art Unit**
Sujatha Sharma	2684

√	Rejected	–	(Through numeral) Cancelled	N	Non-Elected	A	Appeal
=	Allowed	+	Restricted	I	Interference	O	Objected

Claim Final	Claim Original	Date 4/26/05	Date 10/22/05	Date 3/21/06	Date 9/11/06
	1				
	2				
	3				
	4				
	5				
	6				
	7				
	8				
	9				
	10				
	11				
	12				
	13				
	14				
	15				
	16				
	17				
	18				
	19				
	20				
	21				
	22				
	23				
	24				
	25				
	26				
	27				
	28				
	29				
	30				
	31				
	32				
	33				
	34				
	35				
	36				
	37				
	38				
	39				
	40				
	41				
	42				
	43				
	44				
	45				
	46				
	47				
	48				
	49				
	50				

Claim Final	Claim Original	Date
	51	
	52	
	53	
	54	
	55	
	56	
	57	
	58	
	59	
	60	
	61	
	62	
	63	
	64	
	65	
	66	
	67	
	68	
	69	
	70	
	71	
	72	
	73	
	74	
	75	
	76	
	77	
	78	
	79	
	80	
	81	
	82	
	83	
	84	
	85	
	86	
	87	
	88	
	89	
	90	
	91	
	92	
	93	
	94	
	95	
	96	
	97	
	98	
	99	
	100	

Claim Final	Claim Original	Date
	101	
	102	
	103	
	104	
	105	
	106	
	107	
	108	
	109	
	110	
	111	
	112	
	113	
	114	
	115	
	116	
	117	
	118	
	119	
	120	
	121	
	122	
	123	
	124	
	125	
	126	
	127	
	128	
	129	
	130	
	131	
	132	
	133	
	134	
	135	
	136	
	137	
	138	
	139	
	140	
	141	
	142	
	143	
	144	
	145	
	146	
	147	
	148	
	149	
	150	

PART B - FEE(S) TRANSMITTAL

Complete and send this form, together with applicable fee(s), to: Mail **Mail Stop ISSUE FEE**
Commissioner for Patents
P.O. Box 1450
Alexandria, Virginia 22313-1450
or Fax (571)-273-2885

INSTRUCTIONS: This form should be used for transmitting the ISSUE FEE and PUBLICATION FEE (if required). Blocks 1 through 5 should be completed where appropriate. All further correspondence including the Patent, advance orders and notification of maintenance fees will be mailed to the current correspondence address as indicated unless corrected below or directed otherwise in Block 1, by (a) specifying a new correspondence address; and/or (b) indicating a separate "FEE ADDRESS" for maintenance fee notifications.

CURRENT CORRESPONDENCE ADDRESS (Note: Use Block 1 for any change of address)

24244 7590 09/11/2006

MICHAEL W LANDRY
5098 SEACHASE STREET
SAN DIEGO, CA 92130

Note: A certificate of mailing can only be used for domestic mailings of the Fee(s) Transmittal. This certificate cannot be used for any other accompanying papers. Each additional paper, such as an assignment or formal drawing, must have its own certificate of mailing or transmission.

Certificate of Mailing or Transmission -online

I hereby certify that this Fee(s) Transmittal is being deposited with the United States Postal Service with sufficient postage for first class mail in an envelope addressed to the Mail Stop ISSUE FEE address above, or being facsimile transmitted to the USPTO (571) 273-2885, on the date indicated below.

Michael W. Landry	(Depositor's name)
Michael W. Landry	(Signature)
9/22/06	(Date)

APPLICATION NO.	FILING DATE	FIRST NAMED INVENTOR	ATTORNEY DOCKET NO.	CONFIRMATION NO.
10/289,011	11/06/2002	Itzhak Gurantz	9226	9030

TITLE OF INVENTION: SIGNAL SELECTOR AND COMBINER FOR BROADBAND CONTENT DISTRIBUTION

APPLN. TYPE	SMALL ENTITY	ISSUE FEE DUE	PUBLICATION FEE DUE	PREV. PAID ISSUE FEE	TOTAL FEE(S) DUE	DATE DUE
nonprovisional	YES	$700	$0	$0	$700	12/11/2006

EXAMINER	ART UNIT	CLASS-SUBCLASS
SHARMA, SUJATHA R	2618	455-003040

1. Change of correspondence address or indication of "Fee Address" (37 CFR 1.363).
- ☐ Change of correspondence address (or Change of Correspondence Address form PTO/SB/122) attached.
- ☐ "Fee Address" indication (or "Fee Address" Indication form PTO/SB/47; Rev 03-02 or more recent) attached. **Use of a Customer Number is required.**

2. For printing on the patent front page, list
(1) the names of up to 3 registered patent attorneys or agents OR, alternatively,
(2) the name of a single firm (having as a member a registered attorney or agent) and the names of up to 2 registered patent attorneys or agents. If no name is listed, no name will be printed.

1 Michael W. Landry
2
3

3. ASSIGNEE NAME AND RESIDENCE DATA TO BE PRINTED ON THE PATENT (*print or type*)

PLEASE NOTE: Unless an assignee is identified below, no assignee data will appear on the patent. If an assignee is identified below, the document has been filed for recordation as set forth in 37 CFR 3.11. Completion of this form is NOT a substitute for filing an assignment.

(A) NAME OF ASSIGNEE (B) RESIDENCE: (CITY and STATE OR COUNTRY)

Entropic Communications, Inc. San Diego CA

Please check the appropriate assignee category or categories (will not be printed on the patent) : ☐ Individual ☒ Corporation or other private group entity ☐ Government

4a. The following fee(s) are submitted:
- ☒ Issue Fee
- ☐ Publication Fee (No small entity discount permitted)
- ☐ Advance Order - # of Copies _____

4b. Payment of Fee(s): **(Please first reapply any previously paid issue fee shown above)**
- ☐ A check is enclosed.
- ☒ Payment by credit card. ~~Form PTO-2038 is attached.~~ online
- ☐ The Director is hereby authorized to charge the required fee(s), any deficiency, or credit any overpayment, to Deposit Account Number _____ (enclose an extra copy of this form).

5. **Change in Entity Status** (from status indicated above)
- ☐ a. Applicant claims SMALL ENTITY status. See 37 CFR 1.27.
- ☐ b. Applicant is no longer claiming SMALL ENTITY status. See 37 CFR 1.27(g)(2).

NOTE: The Issue Fee and Publication Fee (if required) will not be accepted from anyone other than the applicant; a registered attorney or agent; or the assignee or other party in interest as shown by the records of the United States Patent and Trademark Office.

Authorized Signature Michael W. Landry Date 9/22/2006

Typed or printed name Michael W. Landry Registration No. 38,216

This collection of information is required by 37 CFR 1.311. The information is required to obtain or retain a benefit by the public which is to file (and by the USPTO to process) an application. Confidentiality is governed by 35 U.S.C. 122 and 37 CFR 1.14. This collection is estimated to take 12 minutes to complete, including gathering, preparing, and submitting the completed application form to the USPTO. Time will vary depending upon the individual case. Any comments on the amount of time you require to complete this form and/or suggestions for reducing this burden, should be sent to the Chief Information Officer, U.S. Patent and Trademark Office, U.S. Department of Commerce, P.O. Box 1450, Alexandria, Virginia 22313-1450. DO NOT SEND FEES OR COMPLETED FORMS TO THIS ADDRESS. SEND TO: Commissioner for Patents, P.O. Box 1450, Alexandria, Virginia 22313-1450.

Under the Paperwork Reduction Act of 1995, no persons are required to respond to a collection of information unless it displays a valid OMB control number.

Electronic Patent Application Fee Transmittal

Application Number:	10289011
Filing Date:	06-Nov-2002
Title of Invention:	SIGNAL SELECTOR AND COMBINER FOR BROADBAND CONTENT DISTRIBUTION
First Named Inventor:	Itzhak Gurantz
Filer:	Michael William Landry
Attorney Docket Number:	9226

Filed as Small Entity

Utility Filing Fees

Description	Fee Code	Quantity	Amount	Sub-Total in USD($)
Basic Filing:				
Pages:				
Claims:				
Miscellaneous-Filing:				
Petition:				
Patent-Appeals-and-Interference:				
Post-Allowance-and-Post-Issuance:				
Utility Appl issue fee	2501	1	700	700
Extension-of-Time:				

Description	Fee Code	Quantity	Amount	Sub-Total in USD($)
Miscellaneous:				
			Total in USD ($)	**700**

Electronic Acknowledgement Receipt

EFS ID:	1215386
Application Number:	10289011
Confirmation Number:	9030
Title of Invention:	SIGNAL SELECTOR AND COMBINER FOR BROADBAND CONTENT DISTRIBUTION
First Named Inventor:	Itzhak Gurantz
Customer Number:	24244
Filer:	Michael William Landry
Filer Authorized By:	
Attorney Docket Number:	9226
Receipt Date:	22-SEP-2006
Filing Date:	06-NOV-2002
Time Stamp:	15:39:09
Application Type:	Utility
International Application Number:	

Payment information:

Submitted with Payment	yes
Payment was successfully received in RAM	$700
RAM confirmation Number	178
Deposit Account	

File Listing:

Document Number	Document Description	File Name	File Size(Bytes)	Multi Part	Pages

1	Transmittal letter	9226-SignalSelector-NOA-letter.pdf	88135	no	1
Warnings:					
Information:					
2	New or Additional Drawings	9226-Fig1-17-v4-efile.pdf	118692	no	17
Warnings:					
Information:					
3	Issue Fee Payment Recorded	9226-IssueFeePartB-printed.pdf	100609	no	1
Warnings:					
Information:					
4	Fee Worksheet (PTO-875)	fee-info.pdf	8151	no	2
Warnings:					
Information:					
		Total Files Size (in bytes):	315587		

This Acknowledgement Receipt evidences receipt on the noted date by the USPTO of the indicated documents, characterized by the applicant, and including page counts, where applicable. It serves as evidence of receipt similar to a Post Card, as described in MPEP 503.

New Applications Under 35 U.S.C. 111
If a new application is being filed and the application includes the necessary components for a filing date (see 37 CFR 1.53(b)-(d) and MPEP 506), a Filing Receipt (37 CFR 1.54) will be issued in due course and the date shown on this Acknowledgement Receipt will establish the filing date of the application.

National Stage of an International Application under 35 U.S.C. 371
If a timely submission to enter the national stage of an international application is compliant with the conditions of 35 U.S.C. 371 and other applicable requirements a Form PCT/DO/EO/903 indicating acceptance of the application as a national stage submission under 35 U.S.C. 371 will be issued in addition to the Filing Receipt, in due course.

IN THE UNITED STATES PATENT AND TRADEMARK OFFICE

Application No:	10/289,011
Filed:	11/06/2002
Applicant:	Gurantz et al.
Title:	Signal selector and combiner for broadband content distribution
Examiner/GAU:	Sujatha R Sharma / 2618
Date:	9/22/2006

Issue Fee Payment and Replacement Drawings

Mail Stop Issue Fee (submitted online)
Commissioner for Patents
P.O. Box 1450
Alexandria VA 22313-1450

Dear Sir:

In response to the Notice of Allowance and Fee Due dated 9/11/2006, please accept the following:

- Issue Fee Transmittal, Part B, Issue fee payment made on-line

- Replacement drawings for Figs. 1-17. Formal drawings replace previous informal drawings.

No new matter has been added. Please use Fig. 5 for the published patent front page.

Respectfully submitted,

Michael W. Landry
Attorney for Applicants
Reg. No. 38,216
5098 Seachase St.
San Diego CA 92130
858-229-6801
mlandry@iprsolutions.com

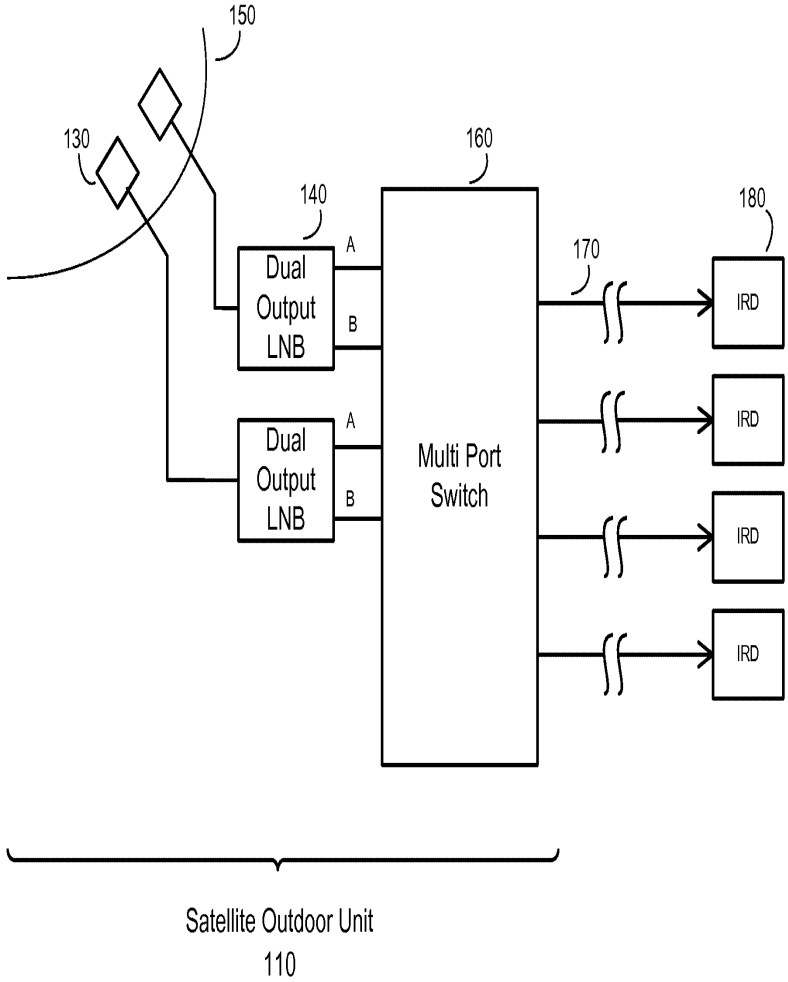

FIG. 1
Prior Art

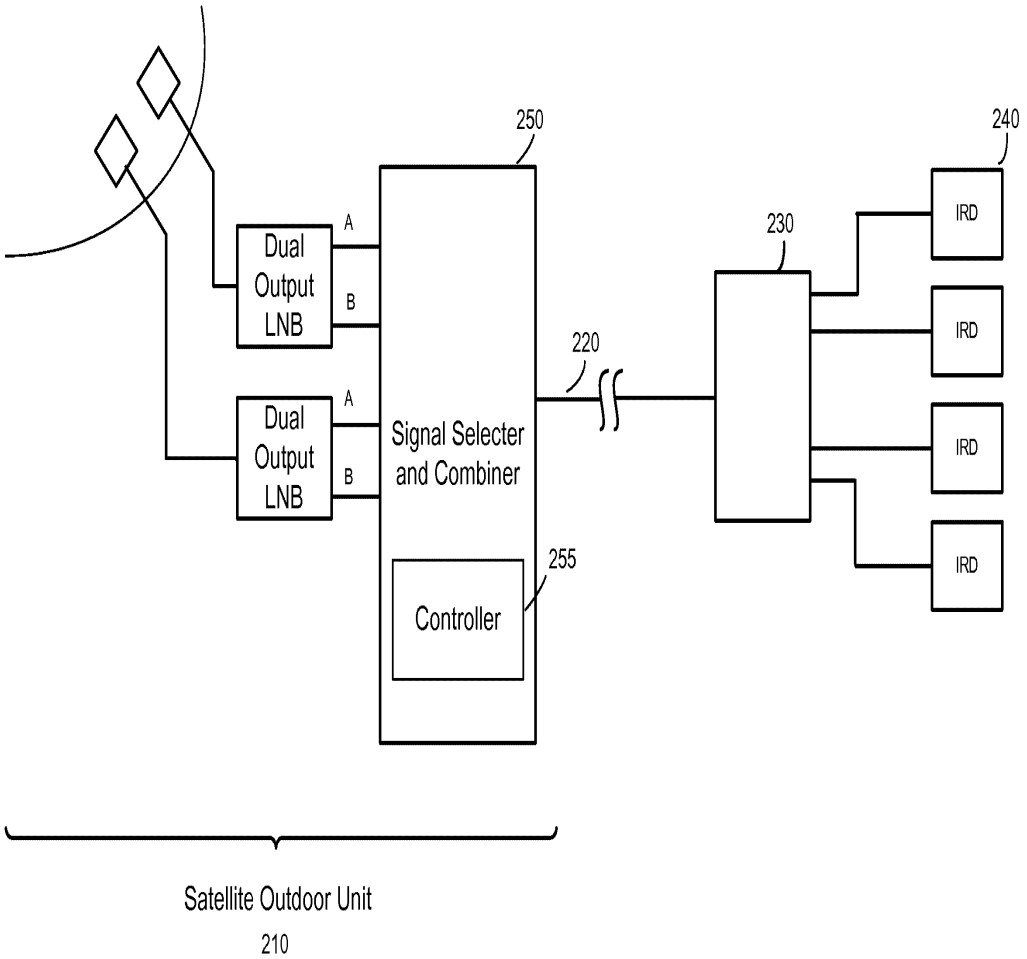
250
240
230
220
255
Dual Output LNB
Dual Output LNB
A
B
A
B
Signal Selecter and Combiner
Controller
IRD
IRD
IRD
IRD
Satellite Outdoor Unit
210

FIG. 2

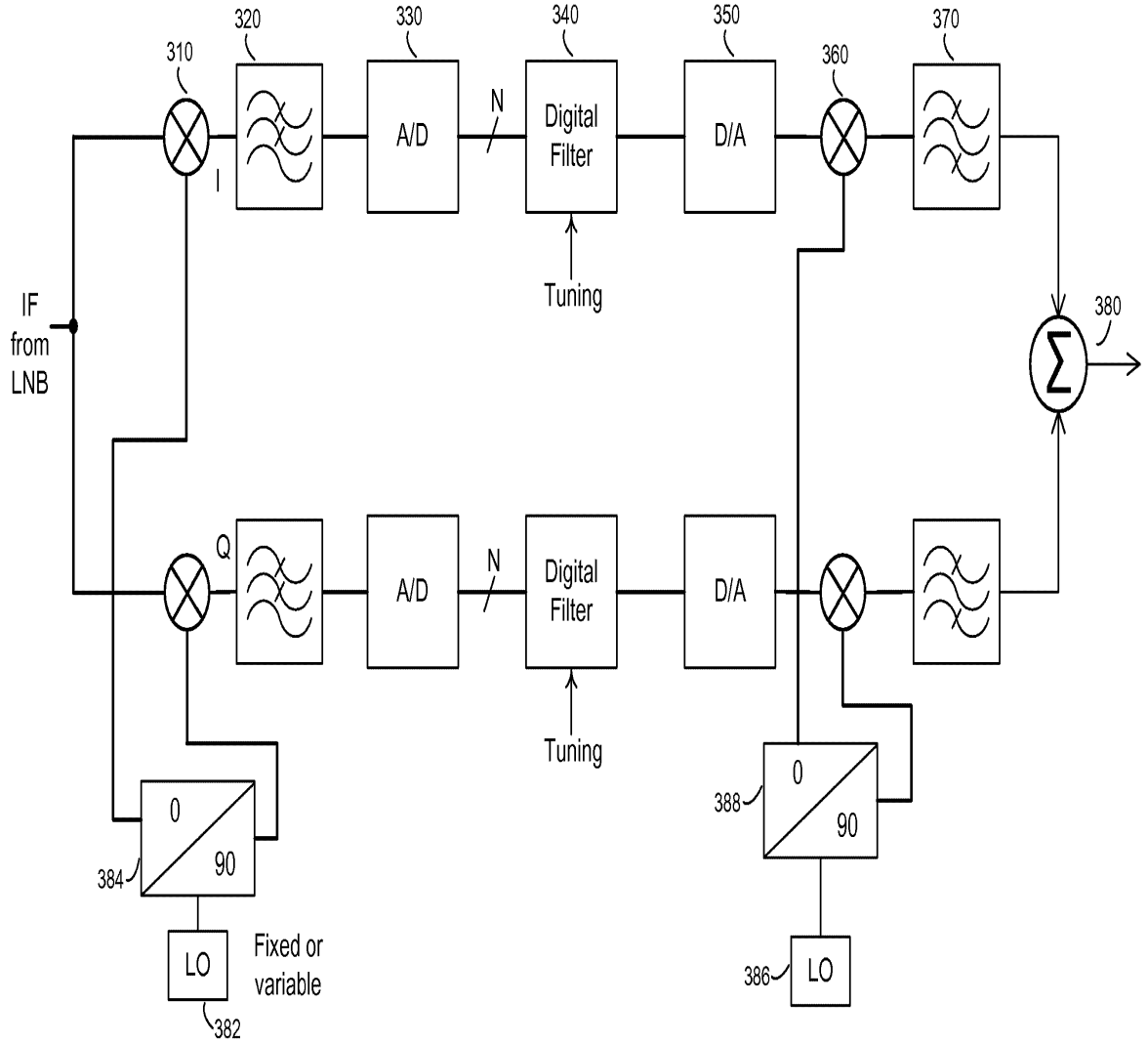
IF
from
LNB
310
320
330
340
350
360
370
380
A/D
N
Digital
Filter
D/A
I
Q
Tuning
0
90
384
388
386
LO
382
Fixed or
variable

FIG. 3

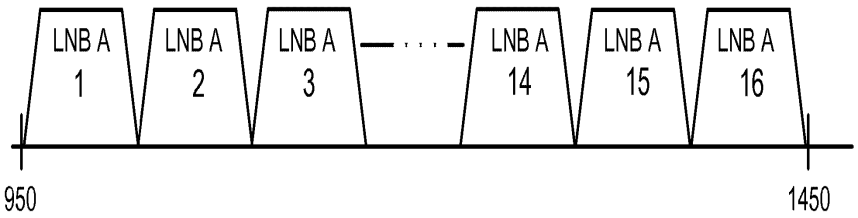

FIG. 4

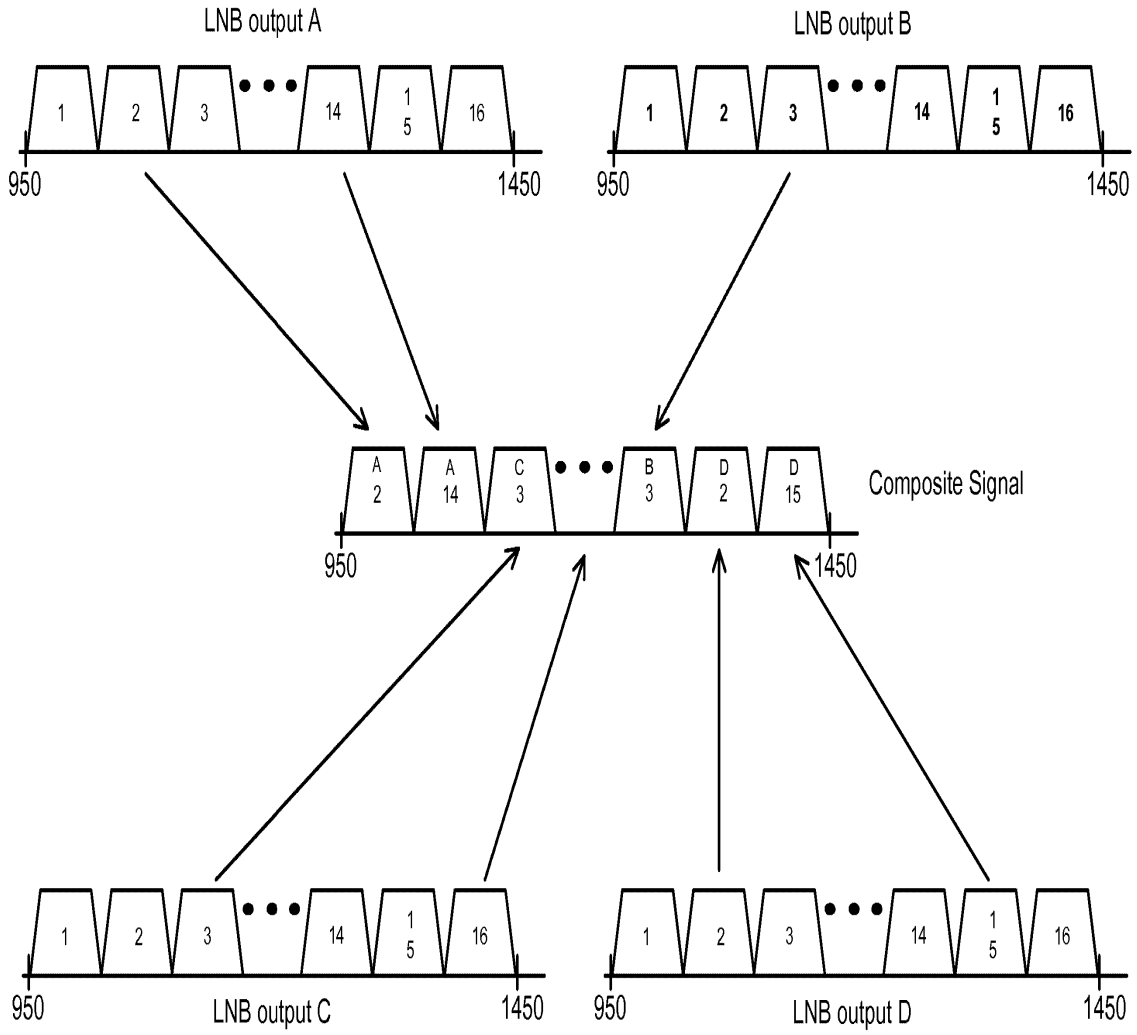
LNB output A
1
2
3
14
15
16
950
1450
LNB output B
1
2
3
14
15
16
950
1450
A 2
A 14
C 3
B 3
D 2
D 15
Composite Signal
950
1450
1
2
3
14
15
16
950
LNB output C
1450
1
2
3
14
15
16
950
LNB output D
1450

FIG. 5

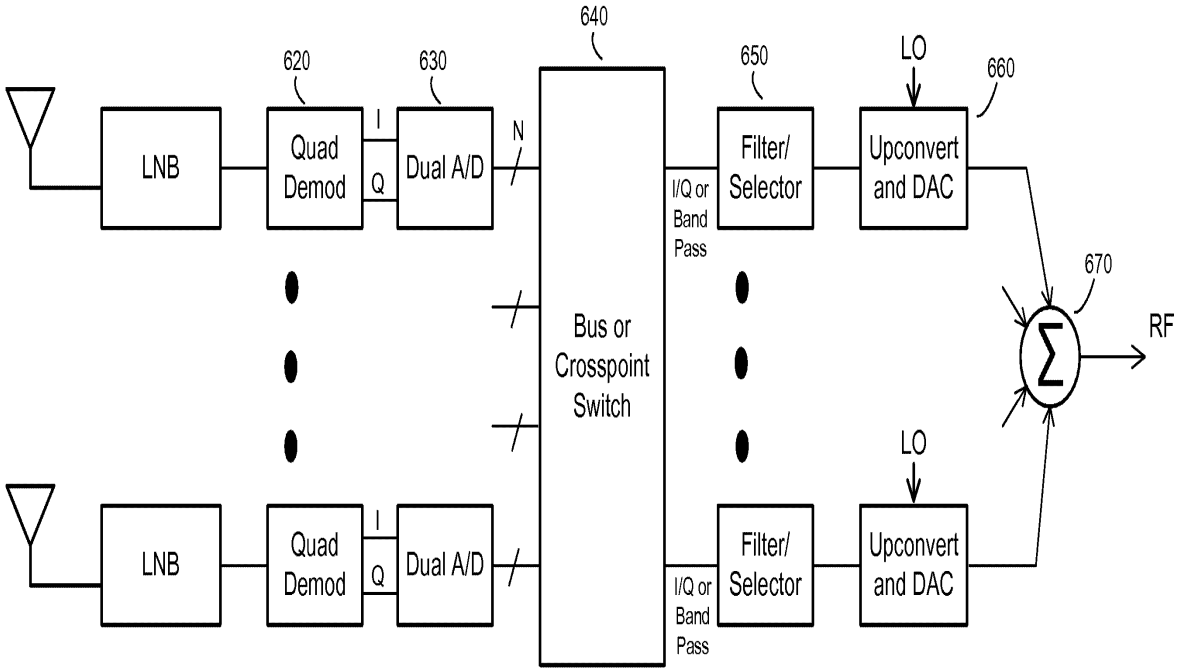

Digital Routing of Digitized Signals

FIG. 6

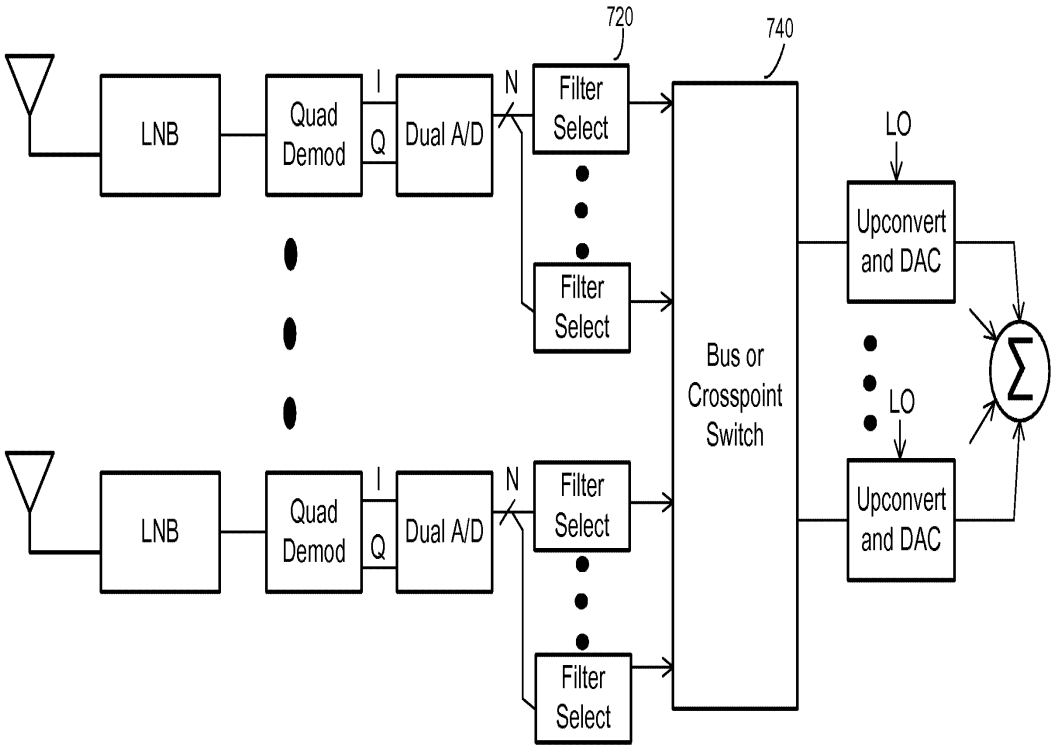

Digital Routing of Digitized Signals

FIG. 7

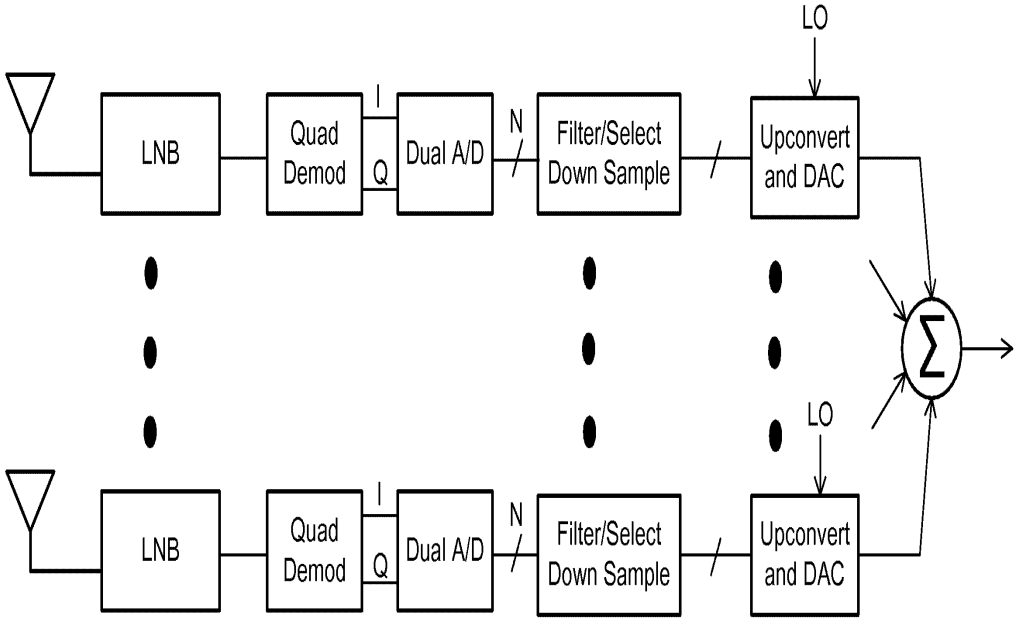
LO
LNB
Quad Demod
I
Q
Dual A/D
N
Filter/Select Down Sample
Upconvert and DAC
Σ
LO
LNB
Quad Demod
I
Q
Dual A/D
N
Filter/Select Down Sample
Upconvert and DAC

FIG. 8

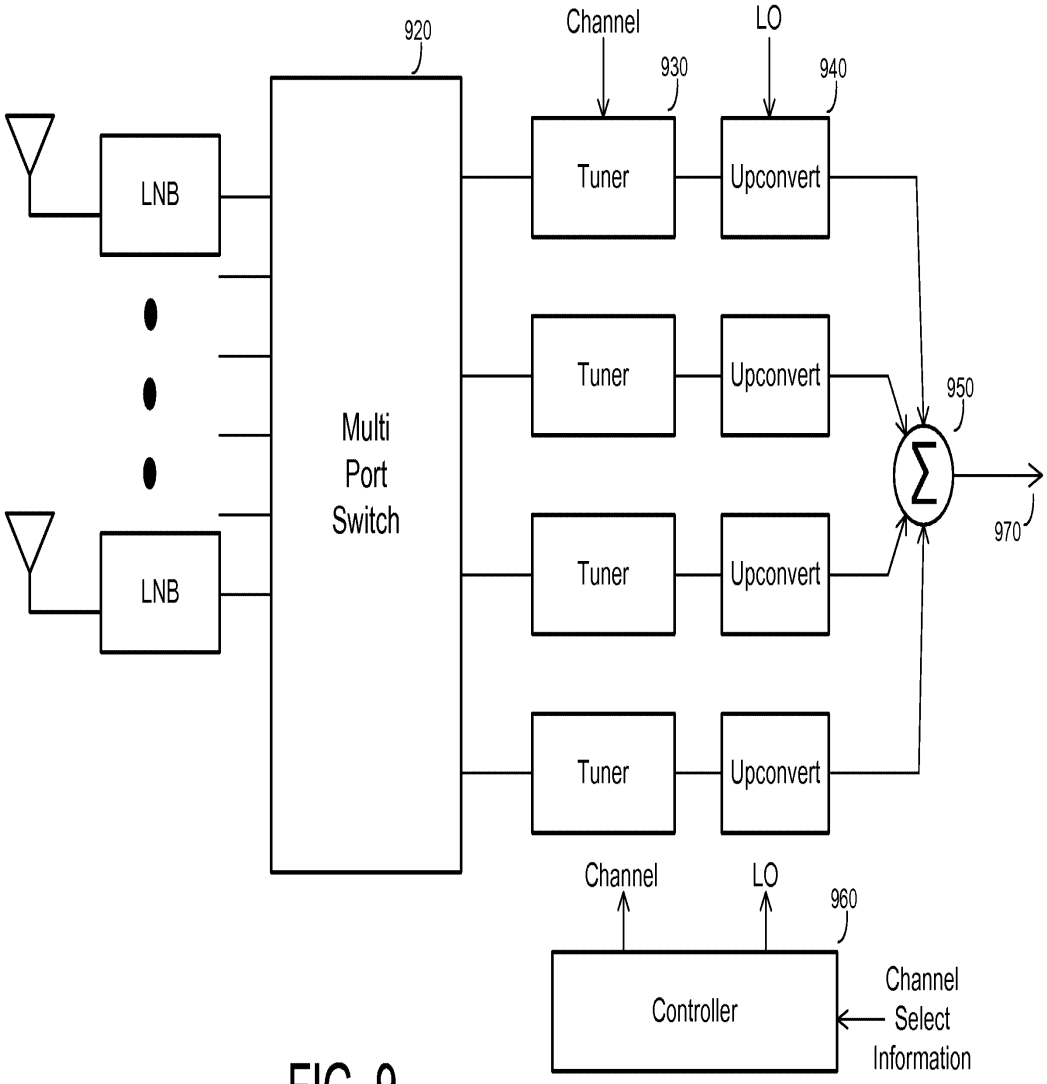
920
Channel
LO
930
940
LNB
LNB
Multi
Port
Switch
Tuner
Upconvert
Tuner
Upconvert
Tuner
Upconvert
Tuner
Upconvert
950
970
Channel
LO
960
Controller
Channel
Select
Information

FIG. 9

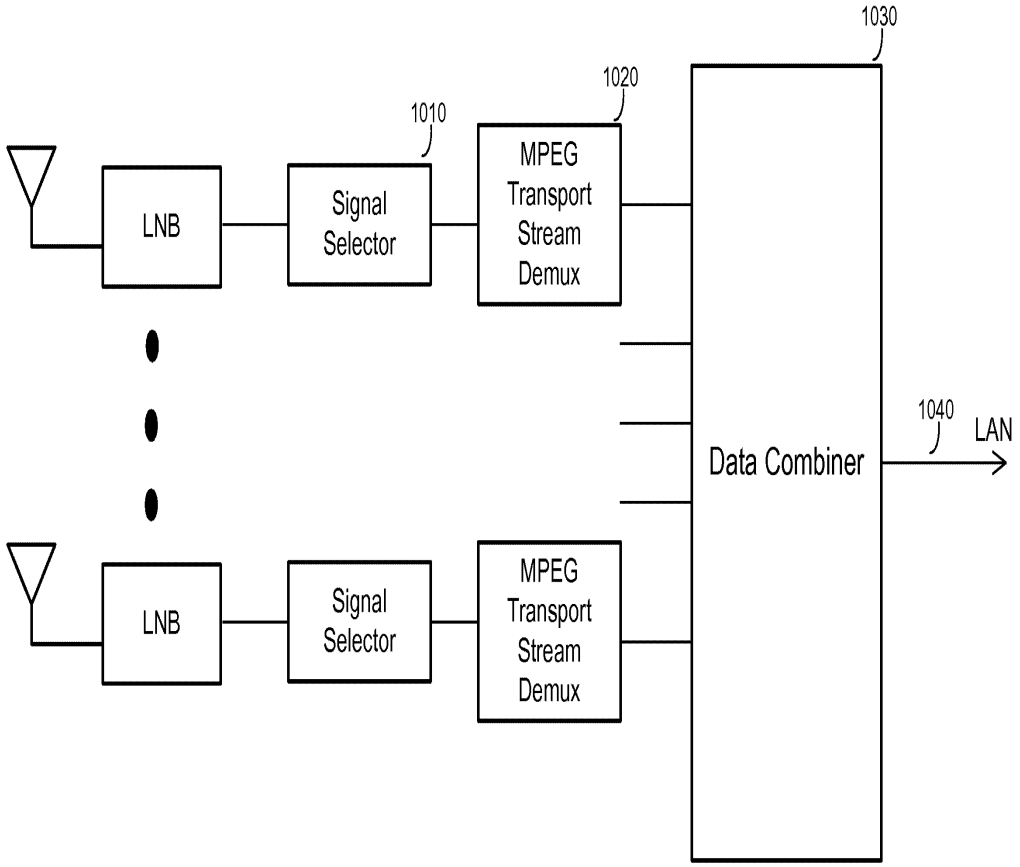
1030
1020
1010
LNB
Signal Selector
MPEG Transport Stream Demux
Data Combiner
1040
LAN
LNB
Signal Selector
MPEG Transport Stream Demux

FIG. 10

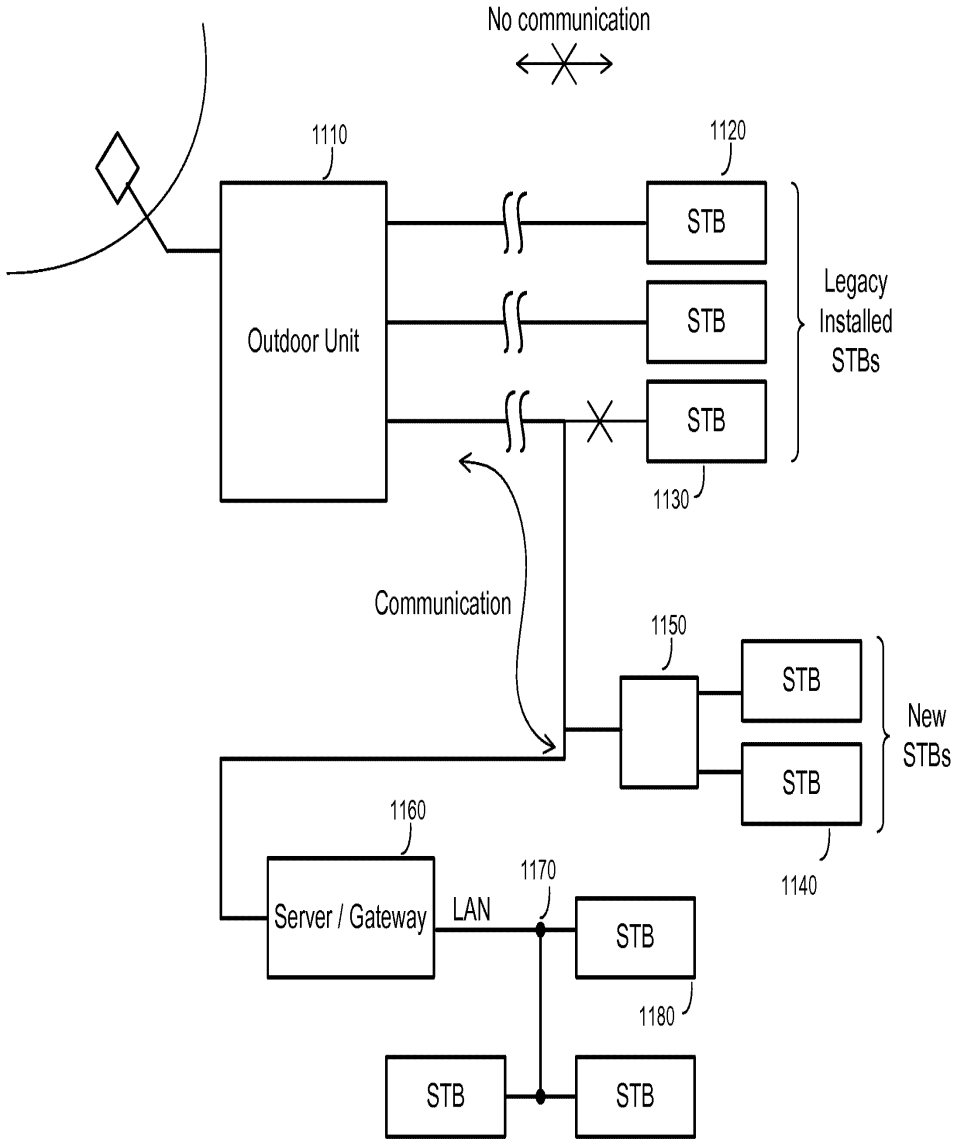
No communication
1110
1120
Outdoor Unit
STB
STB
STB
Legacy
Installed
STBs
1130
Communication
1150
STB
STB
New
STBs
1140
1160
Server / Gateway
LAN
1170
STB
1180
STB
STB

FIG. 11

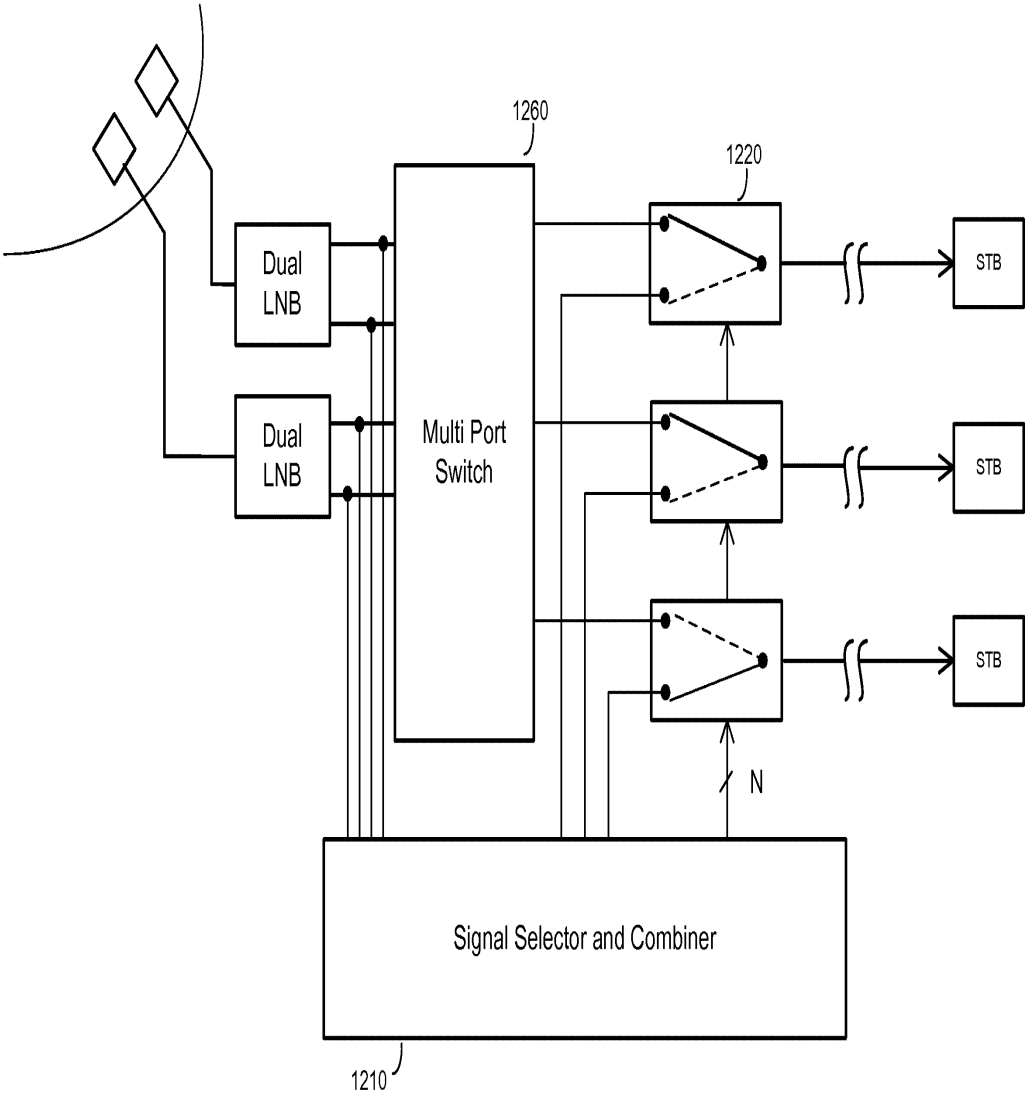
1260
1220
Dual LNB
Dual LNB
Multi Port Switch
STB
STB
STB
N
Signal Selector and Combiner
1210

FIG. 12

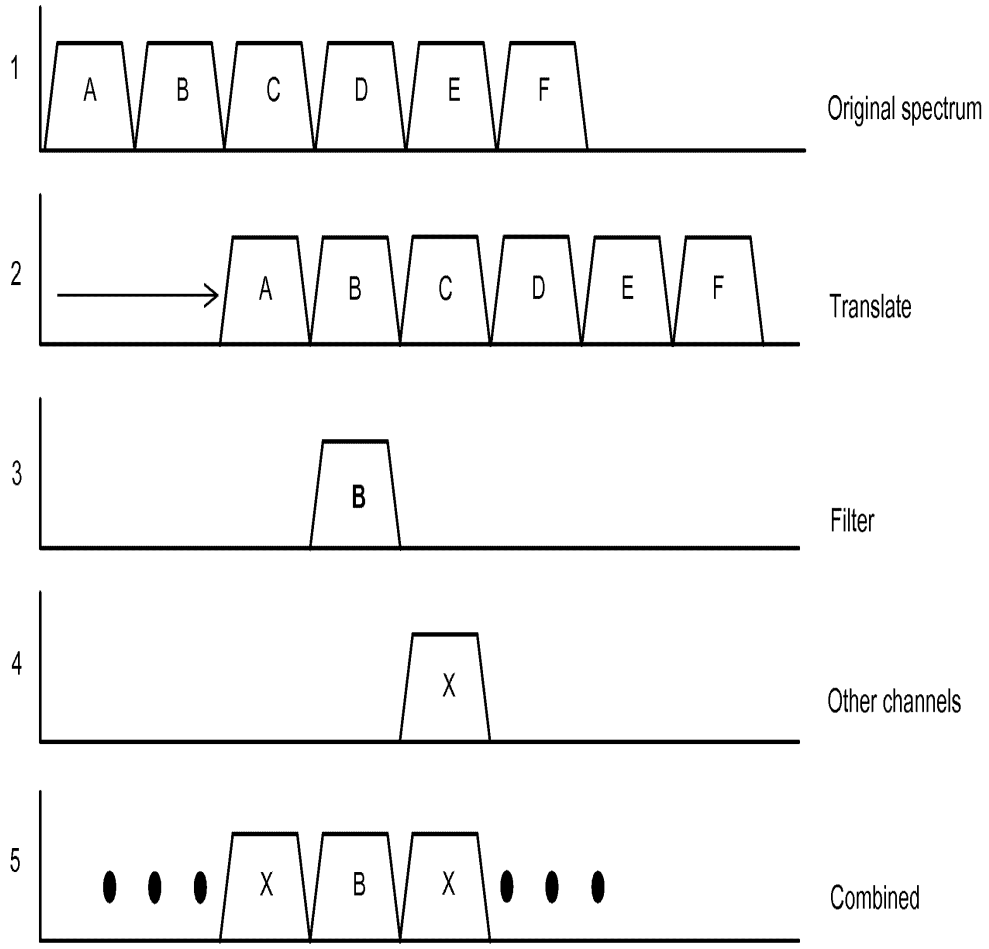
1
A
B
C
D
E
F
Original spectrum
2
A
B
C
D
E
F
Translate
3
B
Filter
4
X
Other channels
5
X
B
X
Combined

FIG. 13

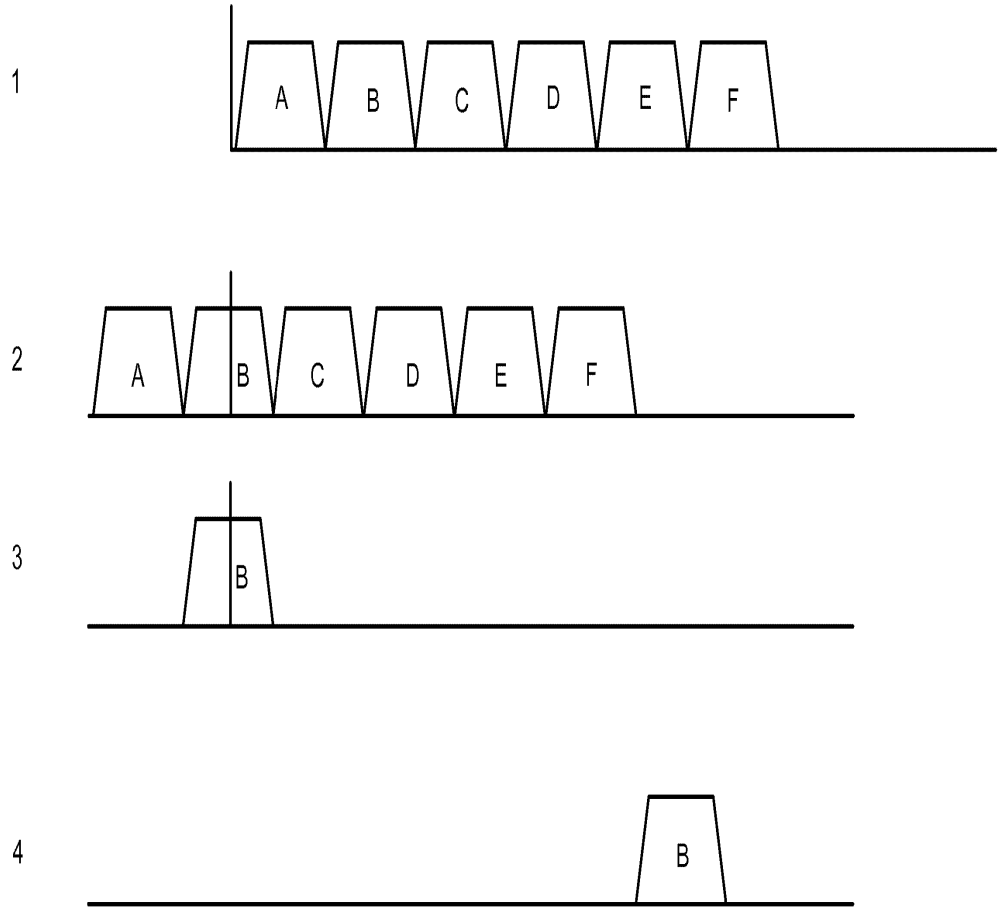

Translate to baseband, filter, translate
to channel frequency

FIG. 14

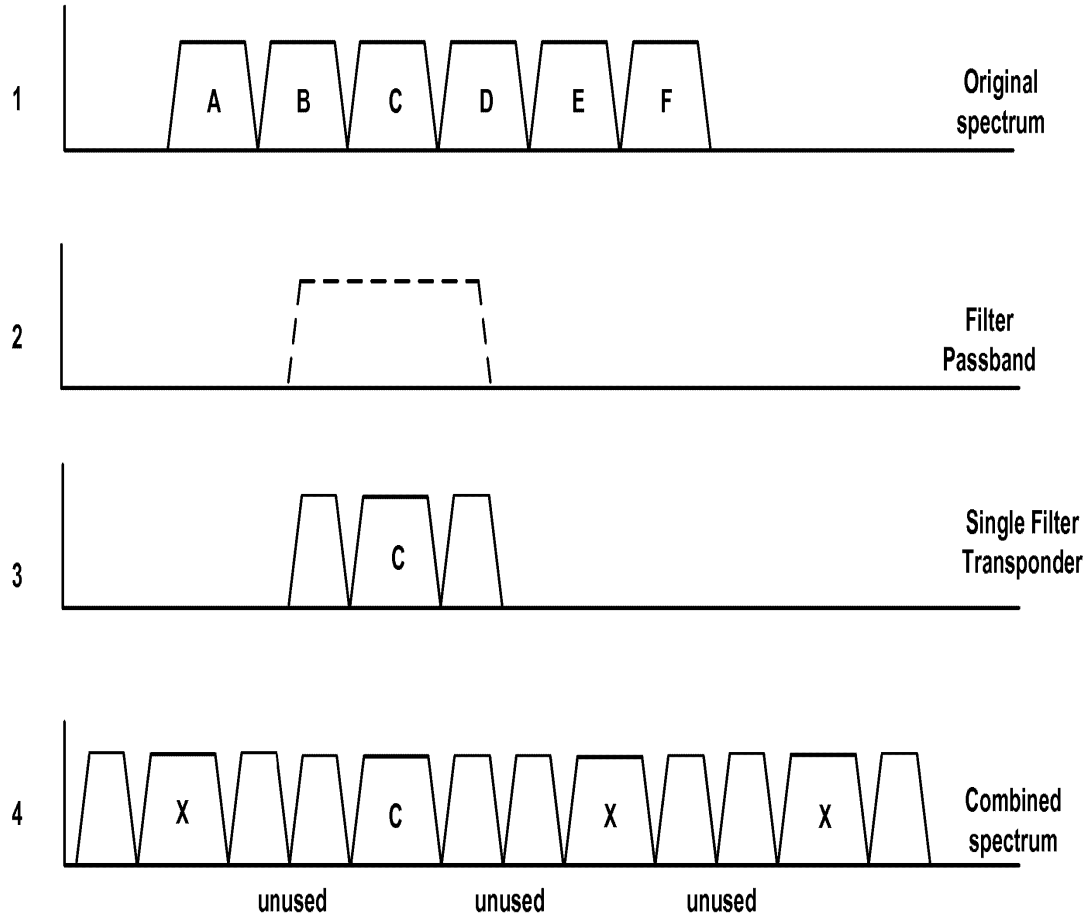
1
A
B
C
D
E
F
Original spectrum
2
Filter Passband
3
C
Single Filter Transponder
4
X
C
X
X
Combined spectrum
unused
unused
unused

FIG. 15

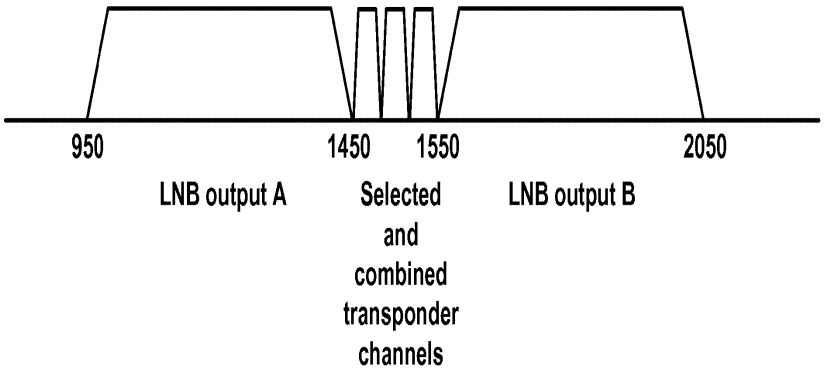
950
1450
1550
2050
LNB output A
Selected and combined transponder channels
LNB output B

FIG. 16

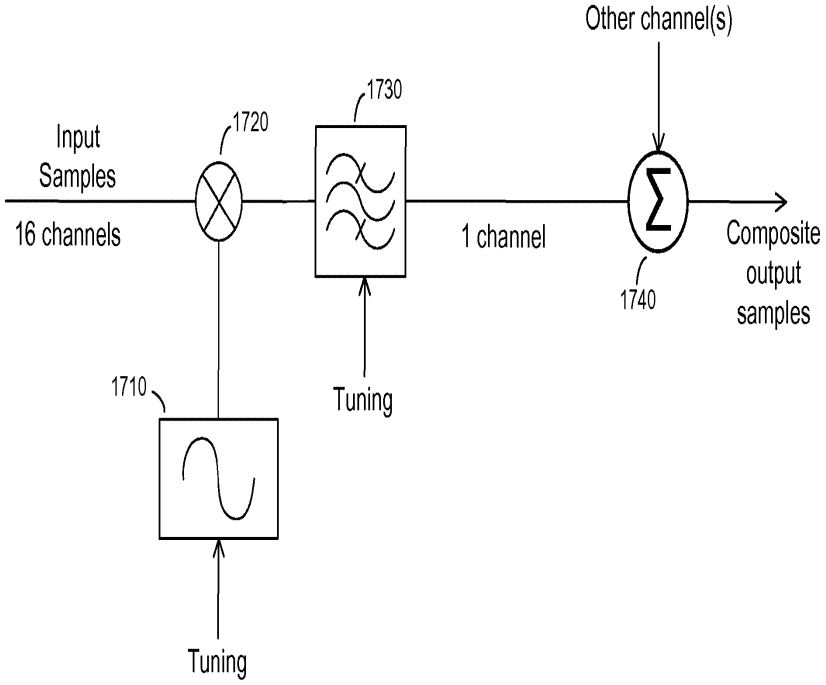

Digital Frequency translator and filter with summer

FIG. 17

UNITED STATES PATENT AND TRADEMARK OFFICE

UNITED STATES DEPARTMENT OF COMMERCE
United States Patent and Trademark Office
Address: COMMISSIONER FOR PATENTS
P.O. Box 1450
Alexandria, Virginia 22313-1450
www.uspto.gov

APPLICATION NUMBER	PATENT NUMBER	GROUP ART UNIT	FILE WRAPPER LOCATION
10/289,011	7130576	2618	9200

Correspondence Address / Fee Address Change

The following fields have been set to Customer Number 77676 on 03/06/2008

- Correspondence Address
- Maintenance Fee Address

The address of record for Customer Number 77676 is:
Michael W. Landry
5098 Seachase Street
San Diego,CA 92130

PTO/SB/47 (03-09)
Approved for use through 03/31/2012. OMB 0651-0016
U.S. Patent and Trademark Office; U.S. DEPARTMENT OF COMMERCE
Under the Paperwork Reduction Act of 1995, no persons are required to respond to a collection of information unless it displays a valid OMB control number.

"FEE ADDRESS" INDICATION FORM

Address to:
Mail Stop M Correspondence
Commissioner for Patents
P.O. Box 1450
Alexandria, VA 22313-1450

- OR -

Fax to:
571-273-6500

INSTRUCTIONS: The issue fee must have been paid for application(s) listed on this form. In addition, only an address represented by a Customer Number can be established as the fee address for maintenance fee purposes (hereafter, fee address). A fee address should be established when correspondence related to maintenance fees should be mailed to a different address then the correspondence address for the application.
When to check the first box below: If you have a Customer Number to represent the fee address. **When to check the second box below**: If you have no Customer Number representing the desired fee address, in which case a completed Request for Customer Number (PTO/SB/125) must be attached to this form. For more information on Customer Numbers, see the Manual of Patent Examining Procedure (MPEP) §403.

For the following listed application(s), please recognize as the "Fee Address" under the provisions of 37 CFR 1.363 the address associated with:

☒ Customer Number: **77882**

OR

☐ The attached Request for Customer Number (PTO/SB125) form.

PATENT NUMBER (if known)	APPLICATION NUMBER
7,130,576	**10/289,011**

Completed by (check one)

☐ Applicant/Inventor

☐ Attorney or Agent of record _____ (Reg. No.)

☐ Assignee of record of the entire interest. See 37 CFR 3.71. Statement under 37 CFR 3.73(b) is enclosed. (Form PTO/SB/96)

☒ Assignee recorded at Reel **014140** Fram **0486**

Signature

Bruce W. Greenhaus
Typed or printed name

(858) 625-3200 x3679
Requester's telephone number

Date

NOTE: Signatures of all the inventors or assignees of record of the entire interest or their representative(s) are required. Submit multiple forms if more than one signature is required, see below*.

☒ *Total of **1** forms are submitted.

This collection of information is required by 37 CFR 1.363. The information is required to obtain or retain a benefit by the public which is to file (and by the USPTO to process) an application. Confidentiality is governed by 35 U.S.C. 122 and 37 CFR 1.11 and 1.14. This collection is estimated to take 5 minutes to complete, including gathering, preparing, and submitting the completed application form to the USPTO. Time will vary depending on the individual case. Any comments on the amount of time you require to complete this form and/or suggestions for reducing this burden, should be sent to the Chief Information Officer, U.S. Patent and Trademark Office, U.S. Department of Commerce, P.O. Box 1450, Alexandria, VA 22313-1450. DO NOT SEND FEES OR COMPLETED FORMS TO THIS ADDRESS. SEND TO: **Mail Stop M Correspondence, Commissioner for Patents, P.O. Box 1450, Alexandria, VA 22313-1450.**

If you need assistance in completing the form, call 1-800-PTO-9199 and select option 2.

Electronic Acknowledgement Receipt

EFS ID:	5367686
Application Number:	10289011
International Application Number:	
Confirmation Number:	9030
Title of Invention:	SIGNAL SELECTOR AND COMBINER FOR BROADBAND CONTENT DISTRIBUTION
First Named Inventor/Applicant Name:	Itzhak Gurantz
Customer Number:	77676
Filer:	Daniel N. Yannuzzi/Linda de la Garza
Filer Authorized By:	Daniel N. Yannuzzi
Attorney Docket Number:	9226
Receipt Date:	20-MAY-2009
Filing Date:	06-NOV-2002
Time Stamp:	13:39:14
Application Type:	Utility under 35 USC 111(a)

Payment information:

Submitted with Payment	no

File Listing:

Document Number	Document Description	File Name	File Size(Bytes)/ Message Digest	Multi Part /.zip	Pages (if appl.)
1	Change of Address	139053-FeeAddress.pdf	24136 0ecffe6dcd6a11fc40171a38fbfd143fe2d09c50	no	1

Warnings:

Information:

Total Files Size (in bytes):	24136

This Acknowledgement Receipt evidences receipt on the noted date by the USPTO of the indicated documents, characterized by the applicant, and including page counts, where applicable. It serves as evidence of receipt similar to a Post Card, as described in MPEP 503.

<u>New Applications Under 35 U.S.C. 111</u>
If a new application is being filed and the application includes the necessary components for a filing date (see 37 CFR 1.53(b)-(d) and MPEP 506), a Filing Receipt (37 CFR 1.54) will be issued in due course and the date shown on this Acknowledgement Receipt will establish the filing date of the application.

<u>National Stage of an International Application under 35 U.S.C. 371</u>
If a timely submission to enter the national stage of an international application is compliant with the conditions of 35 U.S.C. 371 and other applicable requirements a Form PCT/DO/EO/903 indicating acceptance of the application as a national stage submission under 35 U.S.C. 371 will be issued in addition to the Filing Receipt, in due course.

<u>New International Application Filed with the USPTO as a Receiving Office</u>
If a new international application is being filed and the international application includes the necessary components for an international filing date (see PCT Article 11 and MPEP 1810), a Notification of the International Application Number and of the International Filing Date (Form PCT/RO/105) will be issued in due course, subject to prescriptions concerning national security, and the date shown on this Acknowledgement Receipt will establish the international filing date of the application.

THE UNITED STATES PATENT AND TRADEMARK OFFICE

Application No.: 10/289,011

Confirmation No.: 9030

In re application of: Itzhak Gurantz et al.

U.S. Patent No.: 7,130,576

Filed: 11/6/2002

Issued: 10/31/2006

Art Unit: 2618

Examiner: Sujatha R. Sharma

Docket No.: E010004USU1

Title: **SIGNAL SELECTOR AND COMBINER FOR BROADBAND CONTENT DISTRIBUTION**

Certificate of Transmission Under 37 C.F.R. 1.8

I hereby certify that this correspondence is being electronically transmitted to the United States Patent and Trademark Office, Commissioner for Patents, P.O. Box 1450, Alexandria, Virginia 22313-1450 on the date shown below.

DATE: AUGUST 16, 2012

RUTH DER

Mail Stop M Correspondence
Commissioner for Patents
P.O. Box 1450
Alexandria, VA 22313-1450

NOTIFICATION OF CHANGE IN SMALL ENTITY STATUS TO LARGE ENTITY STATUS

Applicant hereby asserts the loss of entitlement to small entity status in the referenced application herein.

The Commissioner is also authorized to charge any fees required by this paper or to credit any excess payment to Deposit Account **04-1679.**

Respectfully submitted,

Dated: August 16, 2012

/James Y.C. Sze/
James Y.C. Sze, Reg. No.: 43,943
Attorney

Duane Morris LLP
750 B Street, Suite 2900
San Diego, CA 92101-4681
Phone: 619.744.2200
Fax: 619.744.2201

Electronic Acknowledgement Receipt

EFS ID:	13515008
Application Number:	10289011
International Application Number:	
Confirmation Number:	9030
Title of Invention:	SIGNAL SELECTOR AND COMBINER FOR BROADBAND CONTENT DISTRIBUTION
First Named Inventor/Applicant Name:	Itzhak Gurantz
Customer Number:	77882
Filer:	James Y.C. Sze/Ruth Der
Filer Authorized By:	James Y.C. Sze
Attorney Docket Number:	E010004USU1
Receipt Date:	16-AUG-2012
Filing Date:	06-NOV-2002
Time Stamp:	15:47:08
Application Type:	Utility under 35 USC 111(a)

Payment information:

Submitted with Payment	no

File Listing:

Document Number	Document Description	File Name	File Size(Bytes)/ Message Digest	Multi Part /.zip	Pages (if appl.)
1	Miscellaneous Incoming Letter	7130576largeentity.pdf	70380 ebbddcb5f26543ce7791f038cb0d57ffc03a89db	no	1

Warnings:

Information:

Total Files Size (in bytes):	70380

This Acknowledgement Receipt evidences receipt on the noted date by the USPTO of the indicated documents, characterized by the applicant, and including page counts, where applicable. It serves as evidence of receipt similar to a Post Card, as described in MPEP 503.

<u>New Applications Under 35 U.S.C. 111</u>
If a new application is being filed and the application includes the necessary components for a filing date (see 37 CFR 1.53(b)-(d) and MPEP 506), a Filing Receipt (37 CFR 1.54) will be issued in due course and the date shown on this Acknowledgement Receipt will establish the filing date of the application.

<u>National Stage of an International Application under 35 U.S.C. 371</u>
If a timely submission to enter the national stage of an international application is compliant with the conditions of 35 U.S.C. 371 and other applicable requirements a Form PCT/DO/EO/903 indicating acceptance of the application as a national stage submission under 35 U.S.C. 371 will be issued in addition to the Filing Receipt, in due course.

<u>New International Application Filed with the USPTO as a Receiving Office</u>
If a new international application is being filed and the international application includes the necessary components for an international filing date (see PCT Article 11 and MPEP 1810), a Notification of the International Application Number and of the International Filing Date (Form PCT/RO/105) will be issued in due course, subject to prescriptions concerning national security, and the date shown on this Acknowledgement Receipt will establish the international filing date of the application.

PTO/SB/80 (11-08)
Approved for use through 11/30/2011. OMB 0651-0035
U.S. Patent and Trademark Office; U.S. DEPARTMENT OF COMMERCE
Under the Paperwork Reduction Act of 1995, no persons are required to respond to a collection of information unless it displays a valid OMB control number.

POWER OF ATTORNEY TO PROSECUTE APPLICATIONS BEFORE THE USPTO

I hereby revoke all previous powers of attorney given in the application identified in the attached statement under 37 CFR 3.73(b).

I hereby appoint:

☑ Practitioners associated with the Customer Number: 23446

OR

☐ Practitioner(s) named below (if more than ten patent practitioners are to be named, then a customer number must be used):

Name	Registration Number	Name	Registration Number

as attorney(s) or agent(s) to represent the undersigned before the United States Patent and Trademark Office (USPTO) in connection with any and all patent applications assigned only to the undersigned according to the USPTO assignment records or assignment documents attached to this form in accordance with 37 CFR 3.73(b).

Please change the correspondence address for the application identified in the attached statement under 37 CFR 3.73(b) to:

☑ The address associated with Customer Number: 23446

OR

☐ Firm or Individual Name			
Address			
City		State	Zip
Country			
Telephone		Email	

Assignee Name and Address:

Entropic Communications, LLC.
2051 Palomar Airport Road, Suite 100
Carlsbad, CA 92011

A copy of this form, together with a statement under 37 CFR 3.73(b) (Form PTO/SB/96 or equivalent) is required to be filed in each application in which this form is used. The statement under 37 CFR 3.73(b) may be completed by one of the practitioners appointed in this form if the appointed practitioner is authorized to act on behalf of the assignee, and must identify the application in which this Power of Attorney is to be filed.

SIGNATURE of Assignee of Record

The individual whose signature and title is supplied below is authorized to act on behalf of the assignee

Signature		Date	6/5/15
Name	Adam Spice	Telephone	
Title	Chief Finanical Officer		

This collection of information is required by 37 CFR 1.31, 1.32 and 1.33. The information is required to obtain or retain a benefit by the public which is to file (and by the USPTO to process) an application. Confidentiality is governed by 35 U.S.C. 122 and 37 CFR 1.11 and 1.14. This collection is estimated to take 3 minutes to complete, including gathering, preparing, and submitting the completed application form to the USPTO. Time will vary depending upon the individual case. Any comments on the amount of time you require to complete this form and/or suggestions for reducing this burden, should be sent to the Chief Information Officer, U.S. Patent and Trademark Office, U.S. Department of Commerce, P.O. Box 1450, Alexandria, VA 22313-1450. DO NOT SEND FEES OR COMPLETED FORMS TO THIS ADDRESS. **SEND TO: Commissioner for Patents, P.O. Box 1450, Alexandria, VA 22313-1450.**

If you need assistance in completing the form, call 1-800-PTO-9199 and select option 2.

Privacy Act Statement

The **Privacy Act of 1974 (P.L. 93-579)** requires that you be given certain information in connection with your submission of the attached form related to a patent application or patent. Accordingly, pursuant to the requirements of the Act, please be advised that: (1) the general authority for the collection of this information is 35 U.S.C. 2(b)(2); (2) furnishing of the information solicited is voluntary; and (3) the principal purpose for which the information is used by the U.S. Patent and Trademark Office is to process and/or examine your submission related to a patent application or patent. If you do not furnish the requested information, the U.S. Patent and Trademark Office may not be able to process and/or examine your submission, which may result in termination of proceedings or abandonment of the application or expiration of the patent.

The information provided by you in this form will be subject to the following routine uses:

1. The information on this form will be treated confidentially to the extent allowed under the Freedom of Information Act (5 U.S.C. 552) and the Privacy Act (5 U.S.C 552a). Records from this system of records may be disclosed to the Department of Justice to determine whether disclosure of these records is required by the Freedom of Information Act.
2. A record from this system of records may be disclosed, as a routine use, in the course of presenting evidence to a court, magistrate, or administrative tribunal, including disclosures to opposing counsel in the course of settlement negotiations.
3. A record in this system of records may be disclosed, as a routine use, to a Member of Congress submitting a request involving an individual, to whom the record pertains, when the individual has requested assistance from the Member with respect to the subject matter of the record.
4. A record in this system of records may be disclosed, as a routine use, to a contractor of the Agency having need for the information in order to perform a contract. Recipients of information shall be required to comply with the requirements of the Privacy Act of 1974, as amended, pursuant to 5 U.S.C. 552a(m).
5. A record related to an International Application filed under the Patent Cooperation Treaty in this system of records may be disclosed, as a routine use, to the International Bureau of the World Intellectual Property Organization, pursuant to the Patent Cooperation Treaty.
6. A record in this system of records may be disclosed, as a routine use, to another federal agency for purposes of National Security review (35 U.S.C. 181) and for review pursuant to the Atomic Energy Act (42 U.S.C. 218(c)).
7. A record from this system of records may be disclosed, as a routine use, to the Administrator, General Services, or his/her designee, during an inspection of records conducted by GSA as part of that agency's responsibility to recommend improvements in records management practices and programs, under authority of 44 U.S.C. 2904 and 2906. Such disclosure shall be made in accordance with the GSA regulations governing inspection of records for this purpose, and any other relevant (*i.e.*, GSA or Commerce) directive. Such disclosure shall not be used to make determinations about individuals.
8. A record from this system of records may be disclosed, as a routine use, to the public after either publication of the application pursuant to 35 U.S.C. 122(b) or issuance of a patent pursuant to 35 U.S.C. 151. Further, a record may be disclosed, subject to the limitations of 37 CFR 1.14, as a routine use, to the public if the record was filed in an application which became abandoned or in which the proceedings were terminated and which application is referenced by either a published application, an application open to public inspection or an issued patent.
9. A record from this system of records may be disclosed, as a routine use, to a Federal, State, or local law enforcement agency, if the USPTO becomes aware of a violation or potential violation of law or regulation.

Electronic Acknowledgement Receipt

EFS ID:	23001133
Application Number:	10289011
International Application Number:	
Confirmation Number:	9030
Title of Invention:	SIGNAL SELECTOR AND COMBINER FOR BROADBAND CONTENT DISTRIBUTION
First Named Inventor/Applicant Name:	Itzhak Gurantz
Customer Number:	77882
Filer:	Christopher C. Winslade/Deb Wilson
Filer Authorized By:	Christopher C. Winslade
Attorney Docket Number:	E010004USU1
Receipt Date:	23-JUL-2015
Filing Date:	06-NOV-2002
Time Stamp:	12:30:01
Application Type:	Utility under 35 USC 111(a)

Payment information:

Submitted with Payment	no

File Listing:

Document Number	Document Description	File Name	File Size(Bytes)/ Message Digest	Multi Part /.zip	Pages (if appl.)
1	Assignee showing of ownership per 37 CFR 3.73	29399US01_373b_Statement_sb96.pdf	431431 b57b18f4fb269c04646ffe05a52c5c07d9c8ea75	no	2

Warnings:

Information:

2	Power of Attorney	Entropic_POA_PreAIA.pdf	340881 8107f4c6d5473b527f97e45769199b81a37aad1b	no	2
Warnings:					
Information:					
		Total Files Size (in bytes):	772312		

This Acknowledgement Receipt evidences receipt on the noted date by the USPTO of the indicated documents, characterized by the applicant, and including page counts, where applicable. It serves as evidence of receipt similar to a Post Card, as described in MPEP 503.

<u>New Applications Under 35 U.S.C. 111</u>
If a new application is being filed and the application includes the necessary components for a filing date (see 37 CFR 1.53(b)-(d) and MPEP 506), a Filing Receipt (37 CFR 1.54) will be issued in due course and the date shown on this Acknowledgement Receipt will establish the filing date of the application.

<u>National Stage of an International Application under 35 U.S.C. 371</u>
If a timely submission to enter the national stage of an international application is compliant with the conditions of 35 U.S.C. 371 and other applicable requirements a Form PCT/DO/EO/903 indicating acceptance of the application as a national stage submission under 35 U.S.C. 371 will be issued in addition to the Filing Receipt, in due course.

<u>New International Application Filed with the USPTO as a Receiving Office</u>
If a new international application is being filed and the international application includes the necessary components for an international filing date (see PCT Article 11 and MPEP 1810), a Notification of the International Application Number and of the International Filing Date (Form PCT/RO/105) will be issued in due course, subject to prescriptions concerning national security, and the date shown on this Acknowledgement Receipt will establish the international filing date of the application.

PTO/SB/96 (07-09)
Approved for use through 07/31/2012. OMB 0651-0031
U.S. Patent and Trademark Office; U.S. DEPARTMENT OF COMMERCE
Under the Paperwork Reduction Act of 1995, no persons are required to respond to a collection of information unless it displays a valid OMB control number.

STATEMENT UNDER 37 CFR 3.73(b)

Applicant/Patent Owner: Itzhak Gurantz, Ladd El Wardani, Michael Landry

Application No./Patent No.: 7,130,576 Filed/Issue Date: 10/31/2006

Titled: SIGNAL SELECTOR AND COMBINER FOR BROADBAND CONTENT DISTRIBUTION

Entropic Communications, LLC, a corporation
(Name of Assignee) (Type of Assignee, e.g., corporation, partnership, university, government agency, etc.

states that it is:

1. [X] the assignee of the entire right, title, and interest in;

2. [ ] an assignee of less than the entire right, title, and interest in (The extent (by percentage) of its ownership interest is _____ %); or

3. [ ] the assignee of an undivided interest in the entirety of (a complete assignment from one of the joint inventors was made)

the patent application/patent identified above, by virtue of either:

A. [ ] An assignment from the inventor(s) of the patent application/patent identified above. The assignment was recorded in the United States Patent and Trademark Office at Reel _____, Frame _____, or for which a copy therefore is attached.

OR

B. [X] A chain of title from the inventor(s), of the patent application/patent identified above, to the current assignee as follows:

1. From: Itzhak Gurantz, Ladd El Wardani, Michael Lanc To: ENTROPIC COMMUNICATIONS, INC.

   The document was recorded in the United States Patent and Trademark Office at Reel 014140, Frame 0486, or for which a copy thereof is attached.

2. From: ENTROPIC COMMUNICATIONS INC. and EN To: ENTROPIC COMMUNICATIONS, INC.

   The document was recorded in the United States Patent and Trademark Office at Reel 035706, Frame 0267, or for which a copy thereof is attached.

3. From: ENTROPIC COMMUNICATIONS, INC. and EX To: ENTROPIC COMMUNICATIONS, LLC

   The document was recorded in the United States Patent and Trademark Office at Reel 035717, Frame 0628, or for which a copy thereof is attached.

[ ] Additional documents in the chain of title are listed on a supplemental sheet(s).

[X] As required by 37 CFR 3.73(b)(1)(i), the documentary evidence of the chain of title from the original owner to the assignee was, or concurrently is being, submitted for recordation pursuant to 37 CFR 3.11.

[NOTE: A separate copy (*i.e.*, a true copy of the original assignment document(s)) must be submitted to Assignment Division in accordance with 37 CFR Part 3, to record the assignment in the records of the USPTO. See MPEP 302.08]

The undersigned (whose title is supplied below) is authorized to act on behalf of the assignee.

/Christopher C. Winslade/	07/23/2015
Signature	Date
Christopher C. Winslade, Reg. No. 36308	Attorney for Applicant
Printed or Typed Name	Title

This collection of information is required by 37 CFR 3.73(b). The information is required to obtain or retain a benefit by the public which is to file (and by the USPTO to process) an application. Confidentiality is governed by 35 U.S.C. 122 and 37 CFR 1.11 and 1.14. This collection is estimated to take 12 minutes to complete, including gathering, preparing, and submitting the completed application form to the USPTO. Time will vary depending upon the individual case. Any comments on the amount of time you require to complete this form and/or suggestions for reducing this burden, should be sent to the Chief Information Officer, U.S. Patent and Trademark Office, U.S. Department of Commerce, P.O. Box 1450, Alexandria, VA 22313-1450. DO NOT SEND FEES OR COMPLETED FORMS TO THIS ADDRESS. **SEND TO: Commissioner for Patents, P.O. Box 1450, Alexandria, VA 22313-1450.**

If you need assistance in completing the form, call 1-800-PTO-9199 and select option 2.

Privacy Act Statement

The **Privacy Act of 1974 (P.L. 93-579)** requires that you be given certain information in connection with your submission of the attached form related to a patent application or patent. Accordingly, pursuant to the requirements of the Act, please be advised that: (1) the general authority for the collection of this information is 35 U.S.C. 2(b)(2); (2) furnishing of the information solicited is voluntary; and (3) the principal purpose for which the information is used by the U.S. Patent and Trademark Office is to process and/or examine your submission related to a patent application or patent. If you do not furnish the requested information, the U.S. Patent and Trademark Office may not be able to process and/or examine your submission, which may result in termination of proceedings or abandonment of the application or expiration of the patent.

The information provided by you in this form will be subject to the following routine uses:

1. The information on this form will be treated confidentially to the extent allowed under the Freedom of Information Act (5 U.S.C. 552) and the Privacy Act (5 U.S.C 552a). Records from this system of records may be disclosed to the Department of Justice to determine whether disclosure of these records is required by the Freedom of Information Act.
2. A record from this system of records may be disclosed, as a routine use, in the course of presenting evidence to a court, magistrate, or administrative tribunal, including disclosures to opposing counsel in the course of settlement negotiations.
3. A record in this system of records may be disclosed, as a routine use, to a Member of Congress submitting a request involving an individual, to whom the record pertains, when the individual has requested assistance from the Member with respect to the subject matter of the record.
4. A record in this system of records may be disclosed, as a routine use, to a contractor of the Agency having need for the information in order to perform a contract. Recipients of information shall be required to comply with the requirements of the Privacy Act of 1974, as amended, pursuant to 5 U.S.C. 552a(m).
5. A record related to an International Application filed under the Patent Cooperation Treaty in this system of records may be disclosed, as a routine use, to the International Bureau of the World Intellectual Property Organization, pursuant to the Patent Cooperation Treaty.
6. A record in this system of records may be disclosed, as a routine use, to another federal agency for purposes of National Security review (35 U.S.C. 181) and for review pursuant to the Atomic Energy Act (42 U.S.C. 218(c)).
7. A record from this system of records may be disclosed, as a routine use, to the Administrator, General Services, or his/her designee, during an inspection of records conducted by GSA as part of that agency's responsibility to recommend improvements in records management practices and programs, under authority of 44 U.S.C. 2904 and 2906. Such disclosure shall be made in accordance with the GSA regulations governing inspection of records for this purpose, and any other relevant (*i.e.*, GSA or Commerce) directive. Such disclosure shall not be used to make determinations about individuals.
8. A record from this system of records may be disclosed, as a routine use, to the public after either publication of the application pursuant to 35 U.S.C. 122(b) or issuance of a patent pursuant to 35 U.S.C. 151. Further, a record may be disclosed, subject to the limitations of 37 CFR 1.14, as a routine use, to the public if the record was filed in an application which became abandoned or in which the proceedings were terminated and which application is referenced by either a published application, an application open to public inspection or an issued patent.
9. A record from this system of records may be disclosed, as a routine use, to a Federal, State, or local law enforcement agency, if the USPTO becomes aware of a violation or potential violation of law or regulation.

UNITED STATES PATENT AND TRADEMARK OFFICE

UNITED STATES DEPARTMENT OF COMMERCE
United States Patent and Trademark Office
Address: COMMISSIONER FOR PATENTS
P.O. Box 1450
Alexandria, Virginia 22313-1450
www.uspto.gov

APPLICATION NUMBER	FILING OR 371(C) DATE	FIRST NAMED APPLICANT	ATTY. DOCKET NO./TITLE
10/289,011	11/06/2002	Itzhak Gurantz	E010004USU1

CONFIRMATION NO. 9030

POWER OF ATTORNEY NOTICE

77882
Sheppard Mullin Richter & Hampton LLP
12275 El Camino Real, Suite 200
San Diego, CA 92130

OC000000076602142

Date Mailed: 08/03/2015

NOTICE REGARDING CHANGE OF POWER OF ATTORNEY

This is in response to the Power of Attorney filed 07/23/2015.

- The Power of Attorney to you in this application has been revoked by the assignee who has intervened as provided by 37 CFR 3.71. Future correspondence will be mailed to the new address of record(37 CFR 1.33).

Questions about the contents of this notice and the requirements it sets forth should be directed to the Office of Data Management, Application Assistance Unit, at **(571) 272-4000** or **(571) 272-4200** or **1-888-786-0101**.

/dtdinh/

UNITED STATES PATENT AND TRADEMARK OFFICE

UNITED STATES DEPARTMENT OF COMMERCE
United States Patent and Trademark Office
Address: COMMISSIONER FOR PATENTS
P.O. Box 1450
Alexandria, Virginia 22313-1450
www.uspto.gov

APPLICATION NUMBER	FILING OR 371(C) DATE	FIRST NAMED APPLICANT	ATTY. DOCKET NO./TITLE
10/289,011	11/06/2002	Itzhak Gurantz	E010004USU1

CONFIRMATION NO. 9030

POA ACCEPTANCE LETTER

23446
MCANDREWS HELD & MALLOY, LTD
500 WEST MADISON STREET
SUITE 3400
CHICAGO, IL 60661

OC000000076602159

Date Mailed: 08/03/2015

NOTICE OF ACCEPTANCE OF POWER OF ATTORNEY

This is in response to the Power of Attorney filed 07/23/2015.

The Power of Attorney in this application is accepted. Correspondence in this application will be mailed to the above address as provided by 37 CFR 1.33.

Questions about the contents of this notice and the requirements it sets forth should be directed to the Office of Data Management, Application Assistance Unit, at **(571) 272-4000** or **(571) 272-4200** or **1-888-786-0101**.

/dtdinh/

PTO/AIA/80 (07-17)
Approved for use through 03/31/2021. OMB 0651-0035
U.S. Patent and Trademark Office; U.S. DEPARTMENT OF COMMERCE
Under the Paperwork Reduction Act of 1995, no person is required to respond to a collection of information unless it displays a valid OMB control number

POWER OF ATTORNEY TO PROSECUTE APPLICATIONS BEFORE THE USPTO

I hereby revoke all previous powers of attorney given in the application identified in the attached statement under 37 CFR 3.73(c).

I hereby appoint:

[X] Practitioners associated with Customer Number: 23,446

OR

[ ] Practitioner(s) named below (if more than ten patent practitioners are to be named, then a customer number must be used):

Name	Registration Number	Name	Registration Number

As attorney(s) or agent(s) to represent the undersigned before the United States Patent and Trademark Office (USPTO) in connection with any and all patent applications assigned only to the undersigned according to the USPTO assignment records or assignment documents attached to this form in accordance with 37 CFR 3.73(c).

Please change the correspondence address for the application identified in the attached statement under 37 CFR 3.73(c) to:

[X] The address associated with Customer Number: 23,446

OR

[ ]

Firm or individual name		
Address		
City	State	Zip
Country		
Telephone	Email	

Assignee name and address: ENTROPIC COMMUNICATIONS, LLC
1345 AVENUE OF THE AMERICAS, 46TH FLOOR
NEW YORK, NY 10105

A copy of this form, together with a statement under 37 CFR 3.73(c) (Form PTO/AIA/96 or equivalent) is required to be filed in each application in which this form is used. The statement under 37 CFR 3.73(c) may be completed by one of the practitioners appointed in this form, and must identify the application in which this Power of Attorney is to be filed.

SIGNATURE of Assignee of Record

The individual whose signature and title is supplied below is authorized to act on behalf of the assignee.

Signature /Andrea L. Gothing/	Date 2021-05-04
Name Andrea L. Gothing	Telephone 415-830-0613
Title Licensing Officer and Authorized Signatory, Entropic Communications, LLC	

This collection of information is required by 37 CFR 1.31, 1.32, and 1.33. The information is required to obtain or retain a benefit by the public, which is to update (and by the USPTO to process) the file of a patent or reexamination proceeding. Confidentiality is governed by 35 U.S.C. 122 and 37 CFR 1.11 and 1.14. This collection is estimated to take 18 minutes to complete, including gathering, preparing, and submitting the completed application form to the USPTO. Time will vary depending upon the individual case. Any comments on the amount of time you require to complete this form and/or suggestions for reducing this burden, should be sent to the Chief Information Officer, U.S. Patent and Trademark Office, U.S. Department of Commerce, P.O. Box 1450, Alexandria, VA 22313-1450. DO NOT SEND FEES OR COMPLETED FORMS TO THIS ADDRESS. **SEND TO: Commissioner for Patents, P.O. Box 1450, Alexandria, VA 22313-1450.**
If you need assistance in completing the form, call 1-800-PTO-9199 and select option 2.

Privacy Act Statement

The **Privacy Act of 1974 (P.L. 93-579)** requires that you be given certain information in connection with your submission of the attached form related to a patent application or patent. Accordingly, pursuant to the requirements of the Act, please be advised that: (1) the general authority for the collection of this information is 35 U.S.C. 2(b)(2); (2) furnishing of the information solicited is voluntary; and (3) the principal purpose for which the information is used by the U.S. Patent and Trademark Office is to process and/or examine your submission related to a patent application or patent. If you do not furnish the requested information, the U.S. Patent and Trademark Office may not be able to process and/or examine your submission, which may result in termination of proceedings or abandonment of the application or expiration of the patent.

The information provided by you in this form will be subject to the following routine uses:

1. The information on this form will be treated confidentially to the extent allowed under the Freedom of Information Act (5 U.S.C. 552) and the Privacy Act (5 U.S.C 552a). Records from this system of records may be disclosed to the Department of Justice to determine whether disclosure of these records is required by the Freedom of Information Act.
2. A record from this system of records may be disclosed, as a routine use, in the course of presenting evidence to a court, magistrate, or administrative tribunal, including disclosures to opposing counsel in the course of settlement negotiations.
3. A record in this system of records may be disclosed, as a routine use, to a Member of Congress submitting a request involving an individual, to whom the record pertains, when the individual has requested assistance from the Member with respect to the subject matter of the record.
4. A record in this system of records may be disclosed, as a routine use, to a contractor of the Agency having need for the information in order to perform a contract. Recipients of information shall be required to comply with the requirements of the Privacy Act of 1974, as amended, pursuant to 5 U.S.C. 552a(m).
5. A record related to an International Application filed under the Patent Cooperation Treaty in this system of records may be disclosed, as a routine use, to the International Bureau of the World Intellectual Property Organization, pursuant to the Patent Cooperation Treaty.
6. A record in this system of records may be disclosed, as a routine use, to another federal agency for purposes of National Security review (35 U.S.C. 181) and for review pursuant to the Atomic Energy Act (42 U.S.C. 218(c)).
7. A record from this system of records may be disclosed, as a routine use, to the Administrator, General Services, or his/her designee, during an inspection of records conducted by GSA as part of that agency's responsibility to recommend improvements in records management practices and programs, under authority of 44 U.S.C. 2904 and 2906. Such disclosure shall be made in accordance with the GSA regulations governing inspection of records for this purpose, and any other relevant (*i.e.*, GSA or Commerce) directive. Such disclosure shall not be used to make determinations about individuals.
8. A record from this system of records may be disclosed, as a routine use, to the public after either publication of the application pursuant to 35 U.S.C. 122(b) or issuance of a patent pursuant to 35 U.S.C. 151. Further, a record may be disclosed, subject to the limitations of 37 CFR 1.14, as a routine use, to the public if the record was filed in an application which became abandoned or in which the proceedings were terminated and which application is referenced by either a published application, an application open to public inspection or an issued patent.
9. A record from this system of records may be disclosed, as a routine use, to a Federal, State, or local law enforcement agency, if the USPTO becomes aware of a violation or potential violation of law or regulation.

Electronic Acknowledgement Receipt

EFS ID:	43328344
Application Number:	10289011
International Application Number:	
Confirmation Number:	9030
Title of Invention:	SIGNAL SELECTOR AND COMBINER FOR BROADBAND CONTENT DISTRIBUTION
First Named Inventor/Applicant Name:	Itzhak Gurantz
Customer Number:	23446
Filer:	Ronald H. Spuhler/Deborah Wilson
Filer Authorized By:	Ronald H. Spuhler
Attorney Docket Number:	E010004USU1
Receipt Date:	23-JUL-2021
Filing Date:	06-NOV-2002
Time Stamp:	11:57:12
Application Type:	Utility under 35 USC 111(a)

Payment information:

Submitted with Payment	no

File Listing:

Document Number	Document Description	File Name	File Size(Bytes)/ Message Digest	Multi Part /.zip	Pages (if appl.)
1	Assignee showing of ownership per 37 CFR 3.73	29399US01_373c_Statement_AIA-96.pdf	124809 c0a833be9372742f82d419f34c5b29859b0218a5	no	3

Warnings:

Information:					
2	Power of Attorney	Entropic-POA_General_Assignee_EntropicCommunications_ALG.pdf	487892 51444e06ae84b241bfc127dc47c5d6c646944dd7	no	2
Warnings:					
Information:					
			Total Files Size (in bytes):	612701	

This Acknowledgement Receipt evidences receipt on the noted date by the USPTO of the indicated documents, characterized by the applicant, and including page counts, where applicable. It serves as evidence of receipt similar to a Post Card, as described in MPEP 503.

New Applications Under 35 U.S.C. 111
If a new application is being filed and the application includes the necessary components for a filing date (see 37 CFR 1.53(b)-(d) and MPEP 506), a Filing Receipt (37 CFR 1.54) will be issued in due course and the date shown on this Acknowledgement Receipt will establish the filing date of the application.
National Stage of an International Application under 35 U.S.C. 371
If a timely submission to enter the national stage of an international application is compliant with the conditions of 35 U.S.C. 371 and other applicable requirements a Form PCT/DO/EO/903 indicating acceptance of the application as a national stage submission under 35 U.S.C. 371 will be issued in addition to the Filing Receipt, in due course.
New International Application Filed with the USPTO as a Receiving Office
If a new international application is being filed and the international application includes the necessary components for an international filing date (see PCT Article 11 and MPEP 1810), a Notification of the International Application Number and of the International Filing Date (Form PCT/RO/105) will be issued in due course, subject to prescriptions concerning national security, and the date shown on this Acknowledgement Receipt will establish the international filing date of the application.

PTO/AIA/96 (08-12)
Approved for use through 01/31/2013. OMB 0651-0031
U.S. Patent and Trademark Office; U.S. DEPARTMENT OF COMMERCE
Under the Paperwork Reduction Act of 1995, no persons are required to respond to a collection of information unless it displays a valid OMB control number.

STATEMENT UNDER 37 CFR 3.73(c)

Applicant/Patent Owner: ENTROPIC COMMUNICATIONS, LLC

Application No./Patent No.: 10/289,011 Filed/Issue Date: 2002-11-06

Titled: SIGNAL SELECTOR AND COMBINER FOR BROADBAND CONTENT DISTRIBUTION

ENTROPIC COMMUNICATIONS, LLC, a limited liability company

(Name of Assignee) (Type of Assignee, e.g., corporation, partnership, university, government agency, etc.)

states that, for the patent application/patent identified above, it is (choose **one** of options 1, 2, 3 or 4 below):

1. ☑ The assignee of the entire right, title, and interest.

2. ☐ An assignee of less than the entire right, title, and interest (check applicable box):

☐ The extent (by percentage) of its ownership interest is _____%. Additional Statement(s) by the owners holding the balance of the interest must be submitted to account for 100% of the ownership interest.

☐ There are unspecified percentages of ownership. The other parties, including inventors, who together own the entire right, title and interest are:

Additional Statement(s) by the owner(s) holding the balance of the interest must be submitted to account for the entire right, title, and interest.

3. ☐ The assignee of an undivided interest in the entirety (a complete assignment from one of the joint inventors was made). The other parties, including inventors, who together own the entire right, title, and interest are:

Additional Statement(s) by the owner(s) holding the balance of the interest must be submitted to account for the entire right, title, and interest.

4. ☐ The recipient, via a court proceeding or the like (*e.g.*, bankruptcy, probate), of an undivided interest in the entirety (a complete transfer of ownership interest was made). The certified document(s) showing the transfer is attached.

The interest identified in option 1, 2 or 3 above (not option 4) is evidenced by either (choose **one** of options A or B below):

A. ☐ An assignment from the inventor(s) of the patent application/patent identified above. The assignment was recorded in the United States Patent and Trademark Office at Reel _____, Frame _____, or for which a copy thereof is attached.

B. ☑ A chain of title from the inventor(s), of the patent application/patent identified above, to the current assignee as follows:

1. From: Itzhak Gurantz, Ladd El Wardani, Michael Landry To: ENTROPIC COMMUNICATIONS, INC.

The document was recorded in the United States Patent and Trademark Office at Reel 014140, Frame 0486, or for which a copy thereof is attached.

2. From: EXCALIBUR ACQUISITION CORPORATION, ENTROPIC COMMUNICATIONS, INC. To: ENTROPIC COMMUNICATIONS, INC.

The document was recorded in the United States Patent and Trademark Office at Reel 035706, Frame 0267, or for which a copy thereof is attached.

This collection of information is required by 37 CFR 3.73(b). The information is required to obtain or retain a benefit by the public which is to file (and by the USPTO to process) an application. Confidentiality is governed by 35 U.S.C. 122 and 37 CFR 1.11 and 1.14. This collection is estimated to take 12 minutes to complete, including gathering, preparing, and submitting the completed application form to the USPTO. Time will vary depending upon the individual case. Any comments on the amount of time you require to complete this form and/or suggestions for reducing this burden, should be sent to the Chief Information Officer, U.S. Patent and Trademark Office, U.S. Department of Commerce, P.O. Box 1450, Alexandria, VA 22313-1450. DO NOT SEND FEES OR COMPLETED FORMS TO THIS ADDRESS. **SEND TO: Commissioner for Patents, P.O. Box 1450, Alexandria, VA 22313-1450**.

If you need assistance in completing the form, call 1-800-PTO-9199 and select option 2.

Under the Paperwork Reduction Act of 1995, no persons are required to respond to a collection of information unless it displays a valid OMB control number.

STATEMENT UNDER 37 CFR 3.73(c)

3. From: ENTROPIC COMMUNICATIONS, INC., EXCALIBUR SUBSIDIARY, LLC To: ENTROPIC COMMUNICATIONS, LLC

The document was recorded in the United States Patent and Trademark Office at
Reel 035717, Frame 0628, or for which a copy thereof is attached.

4. From: ENTROPIC COMMUNICATIONS, LLC To: MAXLINEAR COMMUNICATIONS LLC

The document was recorded in the United States Patent and Trademark Office at
Reel 055776, Frame 0482, or for which a copy thereof is attached.

5. From: MAXLINEAR COMMUNICATIONS LLC To: ENTROPIC COMMUNICATIONS, LLC

The document was recorded in the United States Patent and Trademark Office at
Reel 055899, Frame 0291, or for which a copy thereof is attached.

6. From: _____ To: _____

The document was recorded in the United States Patent and Trademark Office at
Reel _____, Frame _____, or for which a copy thereof is attached.

☐ Additional documents in the chain of title are listed on a supplemental sheet(s).

☑ As required by 37 CFR 3.73(c)(1)(i), the documentary evidence of the chain of title from the original owner to the assignee was, or concurrently is being, submitted for recordation pursuant to 37 CFR 3.11.

[NOTE: A separate copy (i.e., a true copy of the original assignment document(s)) must be submitted to Assignment Division in accordance with 37 CFR Part 3, to record the assignment in the records of the USPTO. See MPEP 302.08]

The undersigned (whose title is supplied below) is authorized to act on behalf of the assignee.

/Ronald H. Spuhler/	2021-07-23
Signature	Date
Ronald H. Spuhler	52245
Printed or Typed Name	Title or Registration Number

Privacy Act Statement

The **Privacy Act of 1974 (P.L. 93-579)** requires that you be given certain information in connection with your submission of the attached form related to a patent application or patent. Accordingly, pursuant to the requirements of the Act, please be advised that: (1) the general authority for the collection of this information is 35 U.S.C. 2(b)(2); (2) furnishing of the information solicited is voluntary; and (3) the principal purpose for which the information is used by the U.S. Patent and Trademark Office is to process and/or examine your submission related to a patent application or patent. If you do not furnish the requested information, the U.S. Patent and Trademark Office may not be able to process and/or examine your submission, which may result in termination of proceedings or abandonment of the application or expiration of the patent.

The information provided by you in this form will be subject to the following routine uses:

1. The information on this form will be treated confidentially to the extent allowed under the Freedom of Information Act (5 U.S.C. 552) and the Privacy Act (5 U.S.C 552a). Records from this system of records may be disclosed to the Department of Justice to determine whether disclosure of these records is required by the Freedom of Information Act.
2. A record from this system of records may be disclosed, as a routine use, in the course of presenting evidence to a court, magistrate, or administrative tribunal, including disclosures to opposing counsel in the course of settlement negotiations.
3. A record in this system of records may be disclosed, as a routine use, to a Member of Congress submitting a request involving an individual, to whom the record pertains, when the individual has requested assistance from the Member with respect to the subject matter of the record.
4. A record in this system of records may be disclosed, as a routine use, to a contractor of the Agency having need for the information in order to perform a contract. Recipients of information shall be required to comply with the requirements of the Privacy Act of 1974, as amended, pursuant to 5 U.S.C. 552a(m).
5. A record related to an International Application filed under the Patent Cooperation Treaty in this system of records may be disclosed, as a routine use, to the International Bureau of the World Intellectual Property Organization, pursuant to the Patent Cooperation Treaty.
6. A record in this system of records may be disclosed, as a routine use, to another federal agency for purposes of National Security review (35 U.S.C. 181) and for review pursuant to the Atomic Energy Act (42 U.S.C. 218(c)).
7. A record from this system of records may be disclosed, as a routine use, to the Administrator, General Services, or his/her designee, during an inspection of records conducted by GSA as part of that agency's responsibility to recommend improvements in records management practices and programs, under authority of 44 U.S.C. 2904 and 2906. Such disclosure shall be made in accordance with the GSA regulations governing inspection of records for this purpose, and any other relevant (*i.e.*, GSA or Commerce) directive. Such disclosure shall not be used to make determinations about individuals.
8. A record from this system of records may be disclosed, as a routine use, to the public after either publication of the application pursuant to 35 U.S.C. 122(b) or issuance of a patent pursuant to 35 U.S.C. 151. Further, a record may be disclosed, subject to the limitations of 37 CFR 1.14, as a routine use, to the public if the record was filed in an application which became abandoned or in which the proceedings were terminated and which application is referenced by either a published application, an application open to public inspection or an issued patent.
9. A record from this system of records may be disclosed, as a routine use, to a Federal, State, or local law enforcement agency, if the USPTO becomes aware of a violation or potential violation of law or regulation.

UNITED STATES PATENT AND TRADEMARK OFFICE

UNITED STATES DEPARTMENT OF COMMERCE
United States Patent and Trademark Office
Address: COMMISSIONER FOR PATENTS
P.O. Box 1450
Alexandria, Virginia 22313-1450
www.uspto.gov

APPLICATION NUMBER	FILING OR 371(C) DATE	FIRST NAMED APPLICANT	ATTY. DOCKET NO./TITLE
10/289,011	11/06/2002	Itzhak Gurantz	E010004USU1

CONFIRMATION NO. 9030

POA ACCEPTANCE LETTER

OC000000127383690

23446
MCANDREWS HELD & MALLOY, LTD
500 WEST MADISON STREET
SUITE 3400
CHICAGO, IL 60661

Date Mailed: 08/02/2021

NOTICE OF ACCEPTANCE OF POWER OF ATTORNEY

This is in response to the Power of Attorney filed 07/23/2021.

The Power of Attorney in this application is accepted. Correspondence in this application will be mailed to the above address as provided by 37 CFR 1.33.

Questions about the contents of this notice and the requirements it sets forth should be directed to the Office of Data Management, Application Assistance Unit, at **(571) 272-4000** or **(571) 272-4200** or **1-888-786-0101**.

/nrhayden/

AO 120 (Rev. 08/10)

TO:	Mail Stop 8 Director of the U.S. Patent and Trademark Office P.O. Box 1450 Alexandria, VA 22313-1450	REPORT ON THE FILING OR DETERMINATION OF AN ACTION REGARDING A PATENT OR TRADEMARK

In Compliance with 35 U.S.C. § 290 and/or 15 U.S.C. § 1116 you are hereby advised that a court action has been filed in the U.S. District Court Eastern District of Texas on the following

☐ Trademarks or ☑ Patents. (☐ the patent action involves 35 U.S.C. § 292.):

DOCKET NO.	DATE FILED	U.S. DISTRICT COURT
2:22-cv-75	3/9/2022	Eastern District of Texas

PLAINTIFF	DEFENDANT
ENTROPIC COMMUNICATIONS, LLC	DIRECTV, LLC, AT&T, INC., AT&T SERVICES, INC., and AT&T COMMUNICATIONS, LLC.

	PATENT OR TRADEMARK NO.	DATE OF PATENT OR TRADEMARK	HOLDER OF PATENT OR TRADEMARK
1	7,130,576	10/31/2006	Entropic Communications, LLC
2	7,542,715	6/2/2009	Entropic Communications, LLC
3	8,792,008	7/29/2014	Entropic Communications, LLC
4			
5			

In the above—entitled case, the following patent(s)/ trademark(s) have been included:

DATE INCLUDED	INCLUDED BY ☐ Amendment ☐ Answer ☐ Cross Bill ☐ Other Pleading	
PATENT OR TRADEMARK NO.	DATE OF PATENT OR TRADEMARK	HOLDER OF PATENT OR TRADEMARK
1		
2		
3		
4		
5		

In the above—entitled case, the following decision has been rendered or judgement issued:

DECISION/JUDGEMENT

CLERK	(BY) DEPUTY CLERK	DATE

Copy 1—Upon initiation of action, mail this copy to Director **Copy 3—Upon termination of action, mail this copy to Director**
Copy 2—Upon filing document adding patent(s), mail this copy to Director **Copy 4—Case file copy**

AO 120 (Rev. 08/10)

TO:	Mail Stop 8 Director of the U.S. Patent and Trademark Office P.O. Box 1450 Alexandria, VA 22313-1450	REPORT ON THE FILING OR DETERMINATION OF AN ACTION REGARDING A PATENT OR TRADEMARK

In Compliance with 35 U.S.C. § 290 and/or 15 U.S.C. § 1116 you are hereby advised that a court action has been filed in the U.S. District Court Eastern District of Texas on the following

☐ Trademarks or ☑ Patents. (☐ the patent action involves 35 U.S.C. § 292.):

DOCKET NO.	DATE FILED	U.S. DISTRICT COURT
2:22-cv-76	3/9/2022	Eastern District of Texas

PLAINTIFF	DEFENDANT
ENTROPIC COMMUNICATIONS, LLC	DISH NETWORK CORP.; DISH NETWORK LLC; AND DISH NETWORK SERVICE LLC

PATENT OR TRADEMARK NO.	DATE OF PATENT OR TRADEMARK	HOLDER OF PATENT OR TRADEMARK
1 7,130,576	10/31/2006	Entropic Communications, LLC
2 7,542,715	6/2/2009	Entropic Communications, LLC
3 8,792,008	7/29/2014	Entropic Communications, LLC
4		
5		

In the above—entitled case, the following patent(s)/ trademark(s) have been included:

DATE INCLUDED	INCLUDED BY ☐ Amendment ☐ Answer ☐ Cross Bill ☐ Other Pleading	
PATENT OR TRADEMARK NO.	DATE OF PATENT OR TRADEMARK	HOLDER OF PATENT OR TRADEMARK
1		
2		
3		
4		
5		

In the above—entitled case, the following decision has been rendered or judgement issued:

DECISION/JUDGEMENT

CLERK	(BY) DEPUTY CLERK	DATE

Copy 1—Upon initiation of action, mail this copy to Director **Copy 3—Upon termination of action, mail this copy to Director**
Copy 2—Upon filing document adding patent(s), mail this copy to Director **Copy 4—Case file copy**