US 20020154055A1

(19) United States

(12) Patent Application Publication

(10) Pub. No.: US 2002/0154055 A1

(43) Pub. Date: Oct. 24, 2002

Davis et al.

(54) LAN BASED SATELLITE ANTENNA/SATELLITE MULTISWITCH

(76) Inventors: **Robert Davis**, Woodbine, MD (US); **Michael Ficco**, Silver Spring, MD (US); **Peter Pardee**, Ramona, CA (US)

Correspondence Address:
Hughes Electronics Corporation
Patent Docket Administration
Bldg. 1, Mail Stop A109
P.O. Box 956
El Segundo, CA 90245-0956 (US)

(21) Appl. No.: **10/123,383**

(22) Filed: **Apr. 15, 2002**

Related U.S. Application Data

(60) Provisional application No. 60/284,593, filed on Apr. 18, 2001.

Publication Classification

(51) **Int. Cl.**[7] **H04H 1/00**; H04N 7/20; H04B 7/185

(52) **U.S. Cl.** **342/352**; 725/63; 455/3.01

(57) **ABSTRACT**

A satellite communication system including an interface device for distributing satellite signals received from an outdoor unit (ODU) to a plurality of indoor units (IDUs) connected to a local area network (LAN), at a particular site. Only two cables, a power cable and a cable connected to the LAN, must be installed between the interface device and the site containing the IDUs. Accordingly, the installation of IDUs at a site is simplified and has the flexibility of allowing future satellite based services to be added without requiring the installation of new cables between the ODU and the IDUs. The satellite communication system also permit flexibility among connected devices, including to which other devices they are connected, how they are connected to other devices and what types of connections are used.

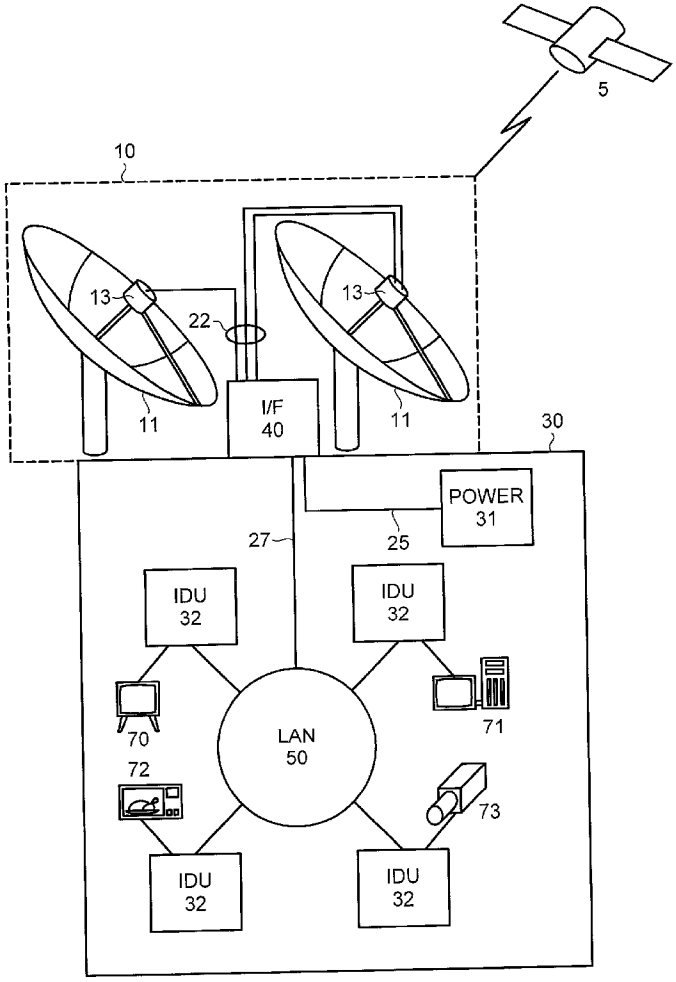

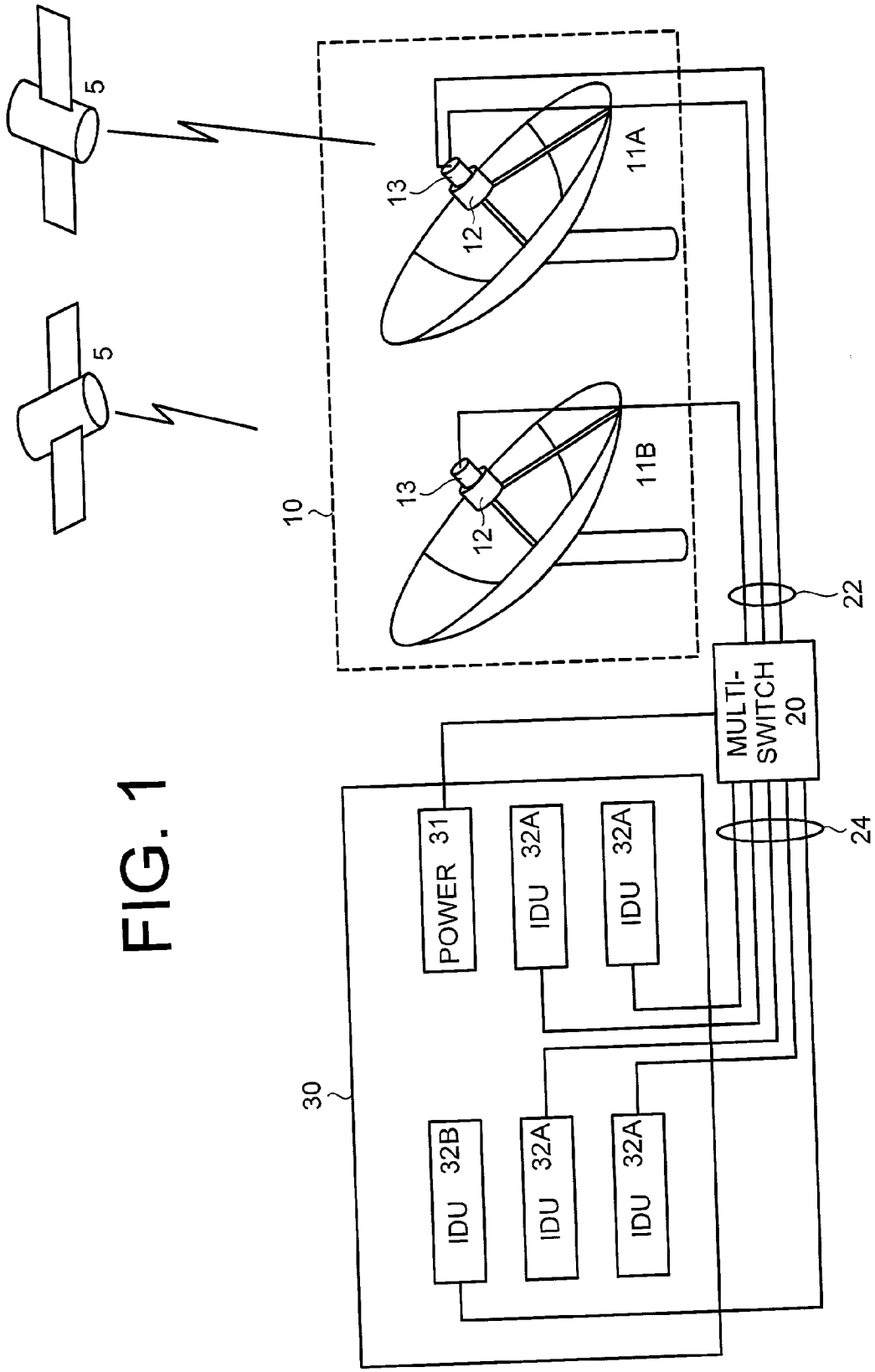
5
5
10
13
12
11A
13
12
11B
22
MULTI-
SWITCH
20
24
30
POWER 31
IDU 32A
IDU 32A
IDU 32B
IDU 32A
IDU 32A

FIG. 1

FIG. 2

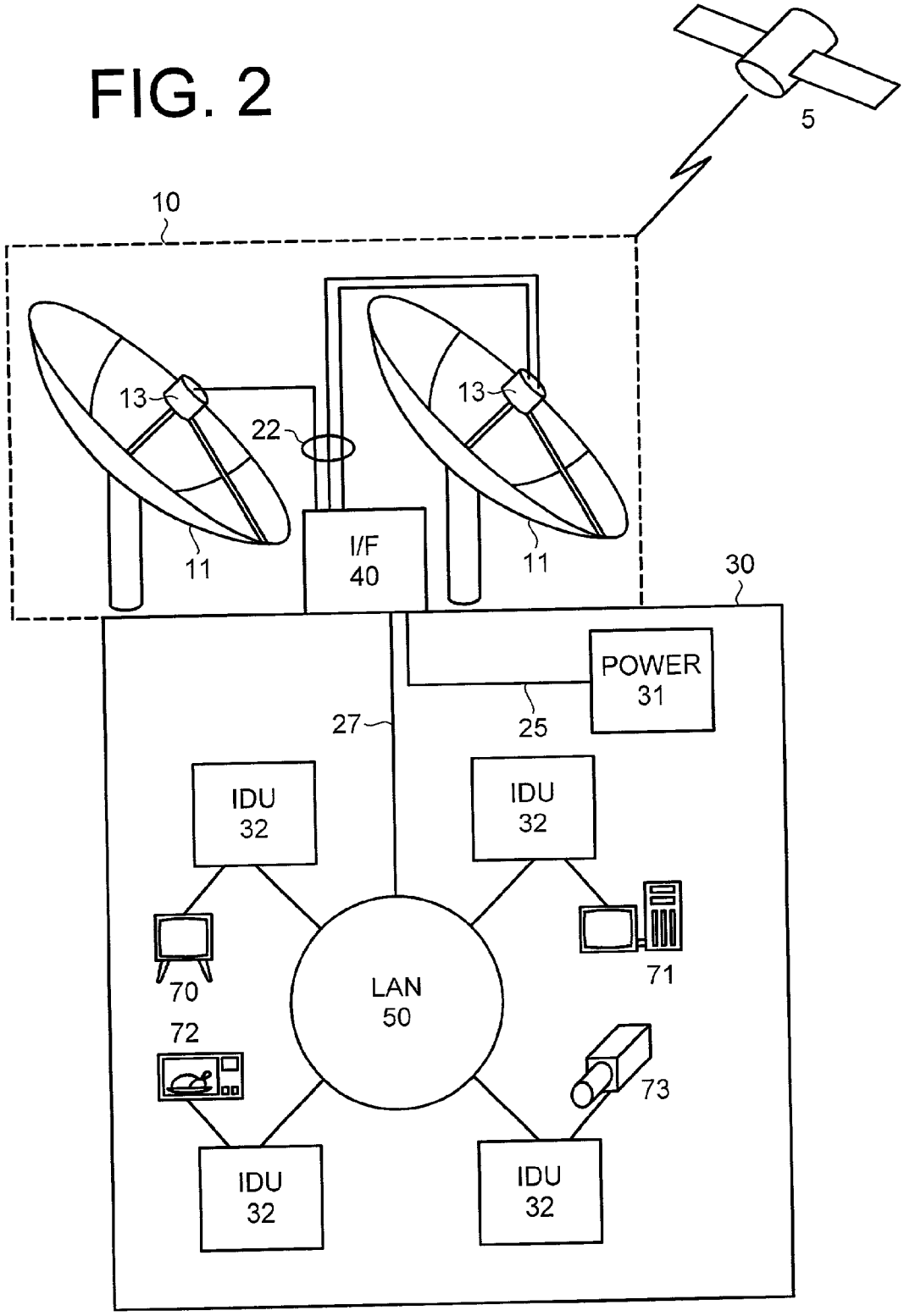
5
10
13
13
22
11
11
I/F
40
30
POWER
31
27
25
IDU
32
IDU
32
70
71
LAN
50
72
73
IDU
32
IDU
32

FIG. 3

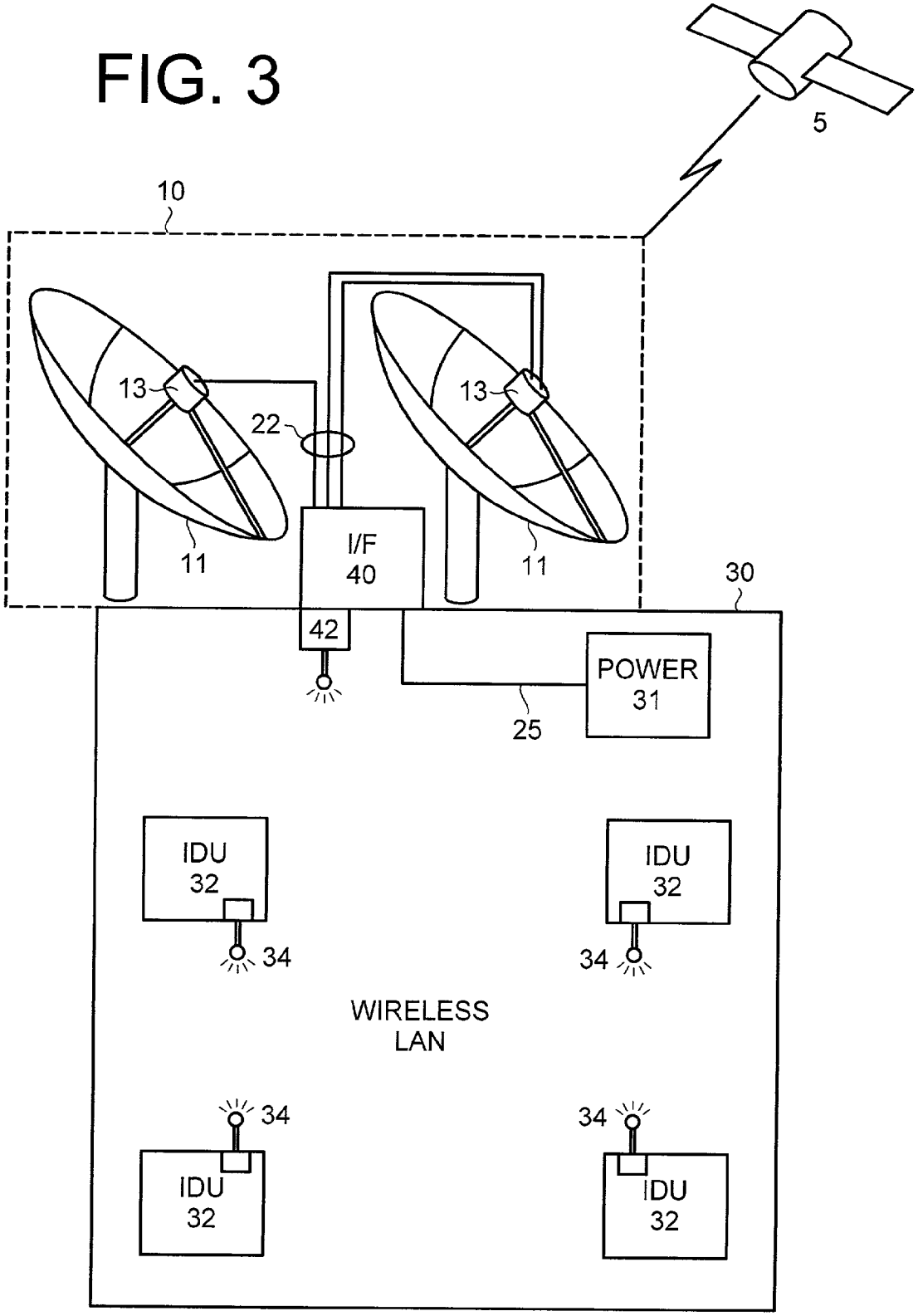
5
10
13
13
22
11
11
I/F
40
42
30
POWER
31
25
IDU
32
34
IDU
32
34
WIRELESS
LAN
34
IDU
32
34
IDU
32

FIG. 4

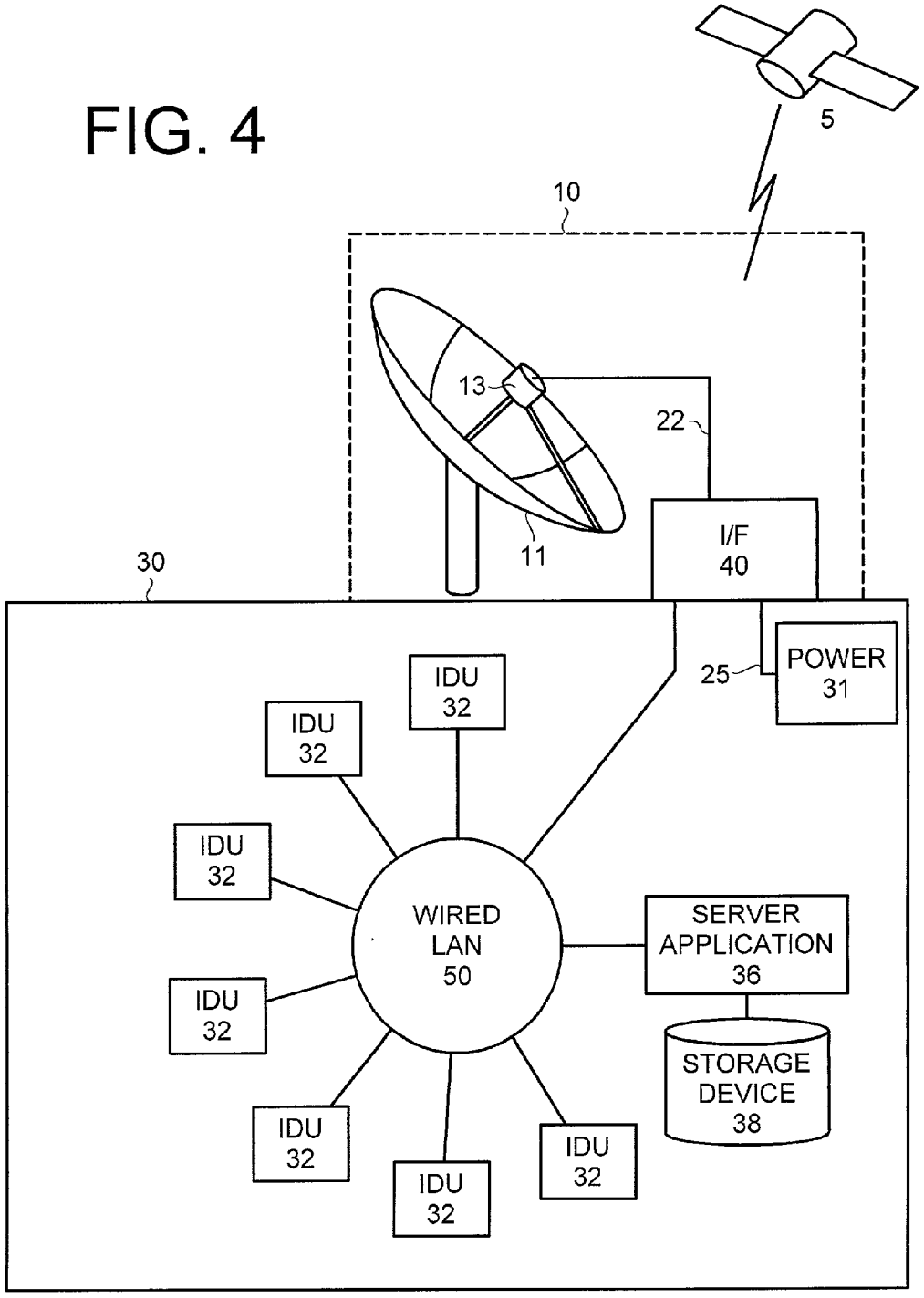
5
10
13
22
11
I/F
40
30
25
POWER
31
IDU
32
IDU
32
IDU
32
IDU
32
IDU
32
IDU
32
IDU
32
WIRED
LAN
50
SERVER
APPLICATION
36
STORAGE
DEVICE
38

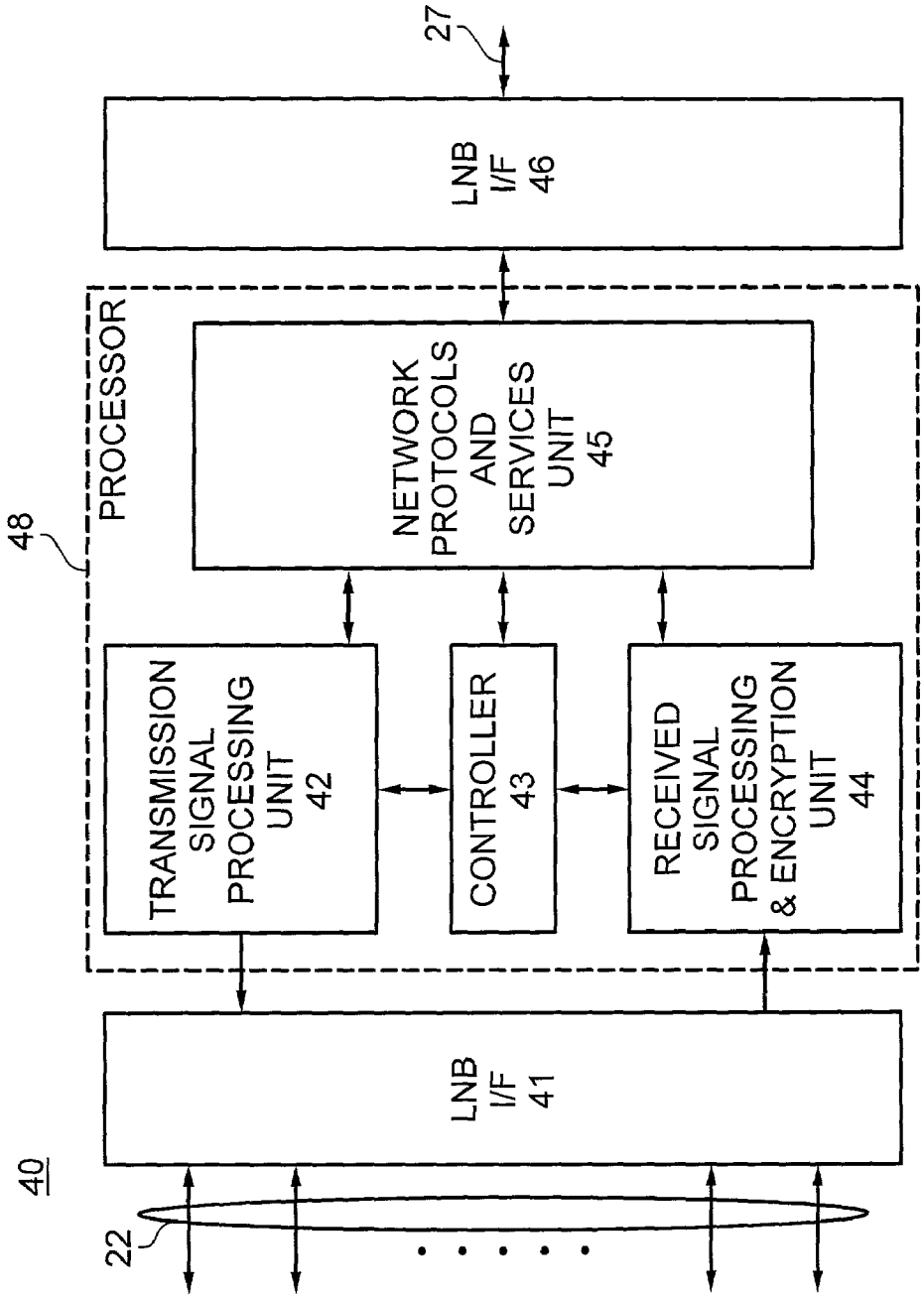
27
LNB I/F 46
48
PROCESSOR
NETWORK PROTOCOLS AND SERVICES UNIT 45
TRANSMISSION SIGNAL PROCESSING UNIT 42
CONTROLLER 43
RECEIVED SIGNAL PROCESSING & ENCRYPTION UNIT 44
40
LNB I/F 41
22

FIG. 5

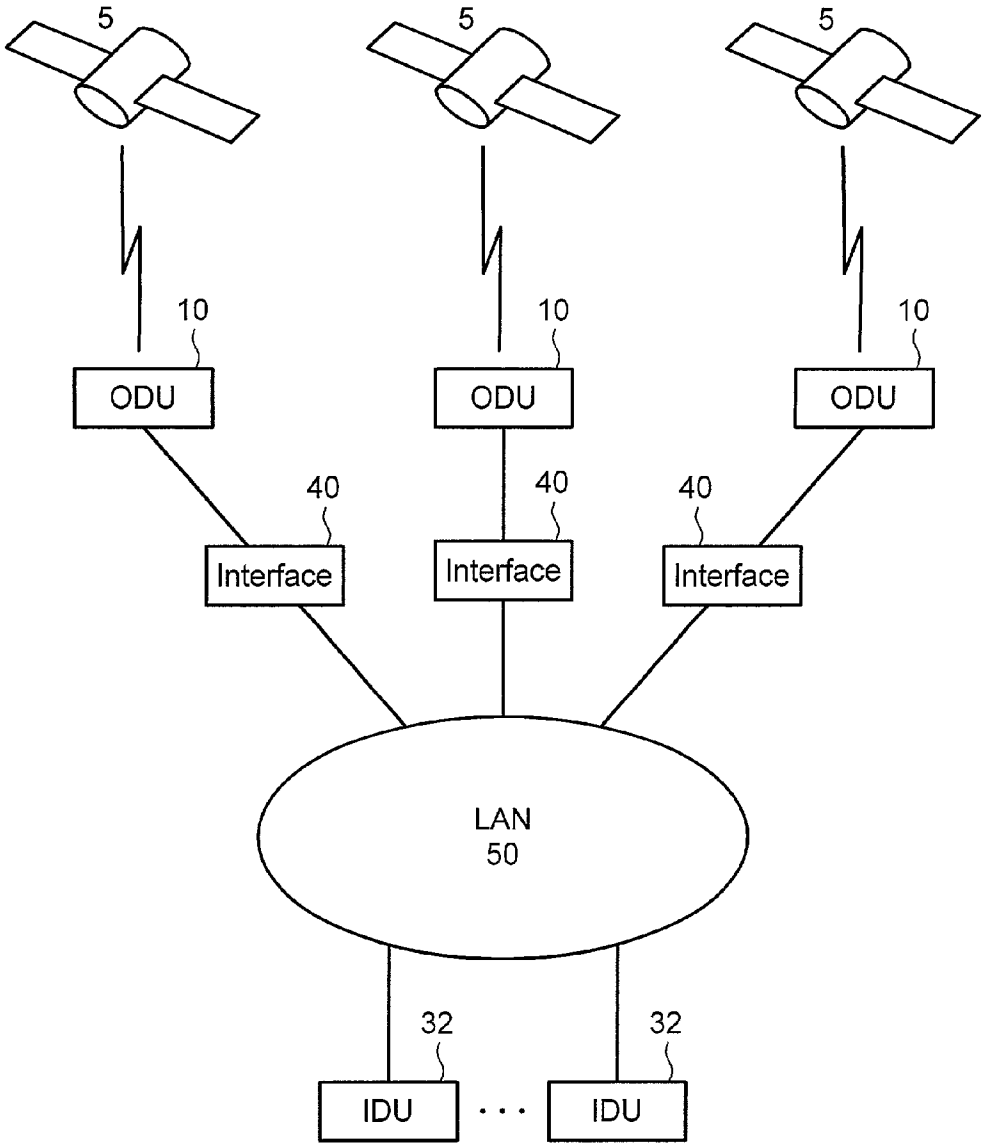
5
5
5
10
10
10
ODU
ODU
ODU
40
40
40
Interface
Interface
Interface
LAN
50
32
32
IDU
IDU

FIG. 6

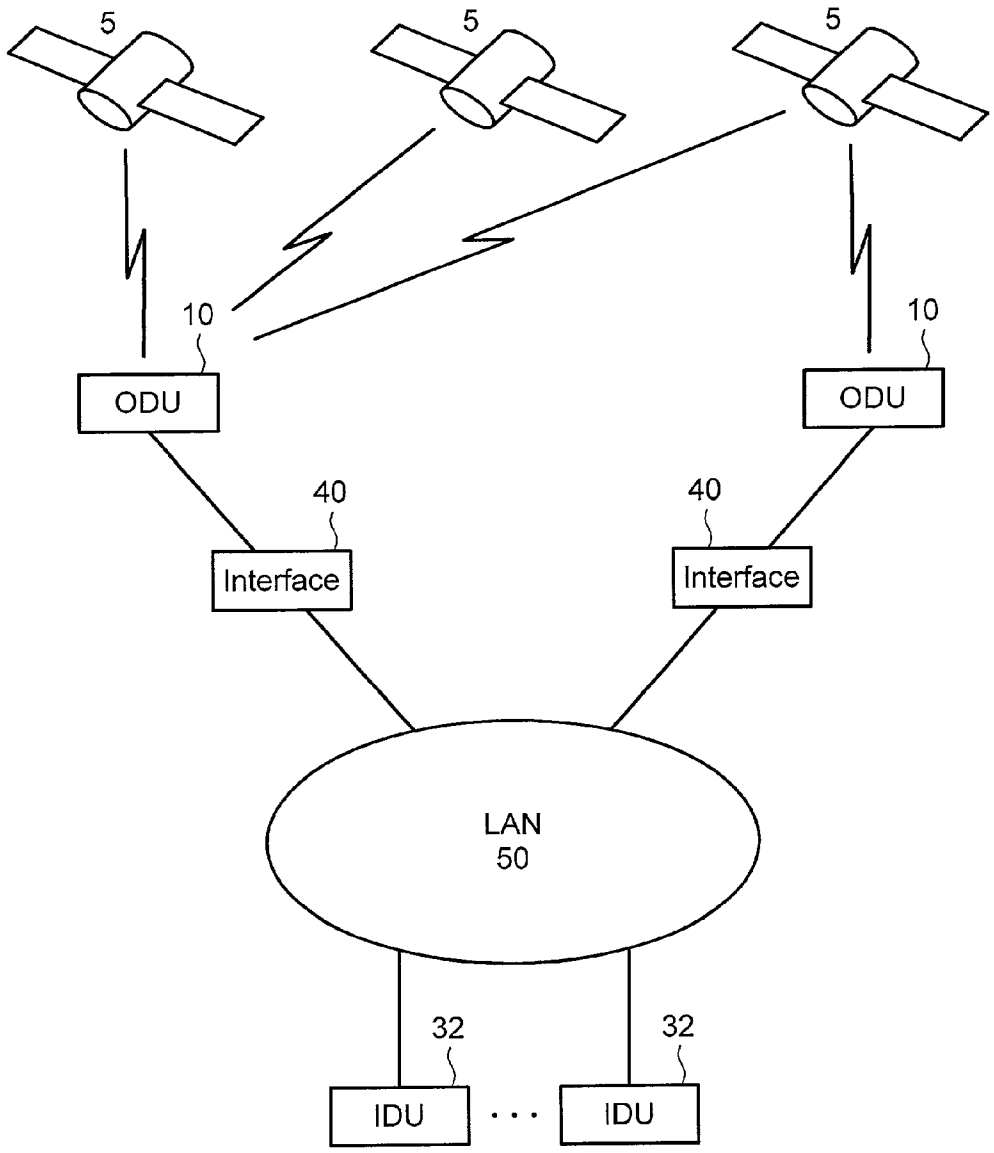
5
5
5
10
10
ODU
ODU
40
40
Interface
Interface
LAN
50
32
32
IDU
IDU

FIG. 7

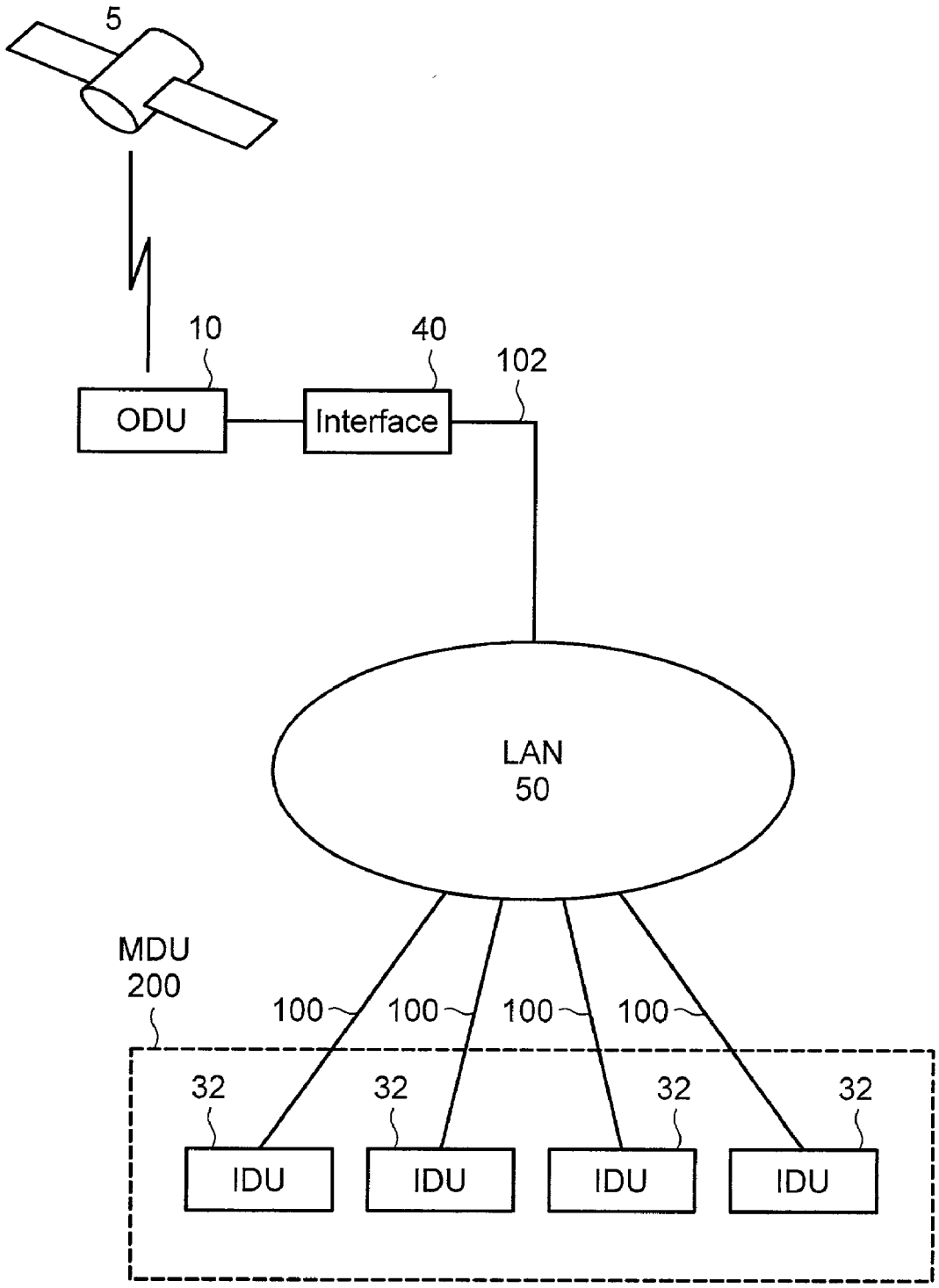
5
10
40
102
ODU
Interface
LAN
50
MDU
200
100
100
100
100
32
32
32
32
IDU
IDU
IDU
IDU

FIG. 8

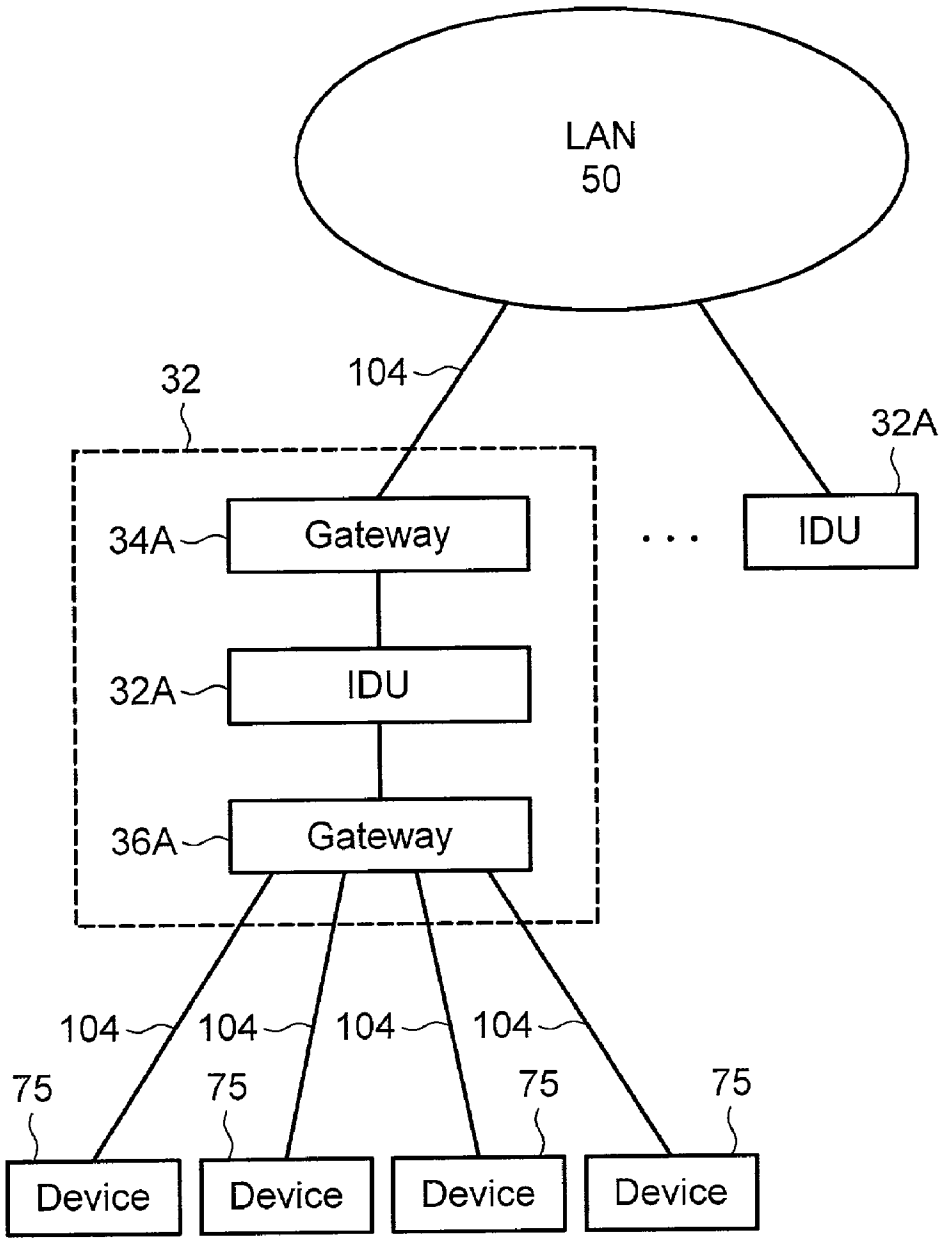
LAN
50
32
104
32A
34A
Gateway
IDU
32A
IDU
36A
Gateway
104
104
104
104
75
75
75
75
Device
Device
Device
Device

FIG. 9

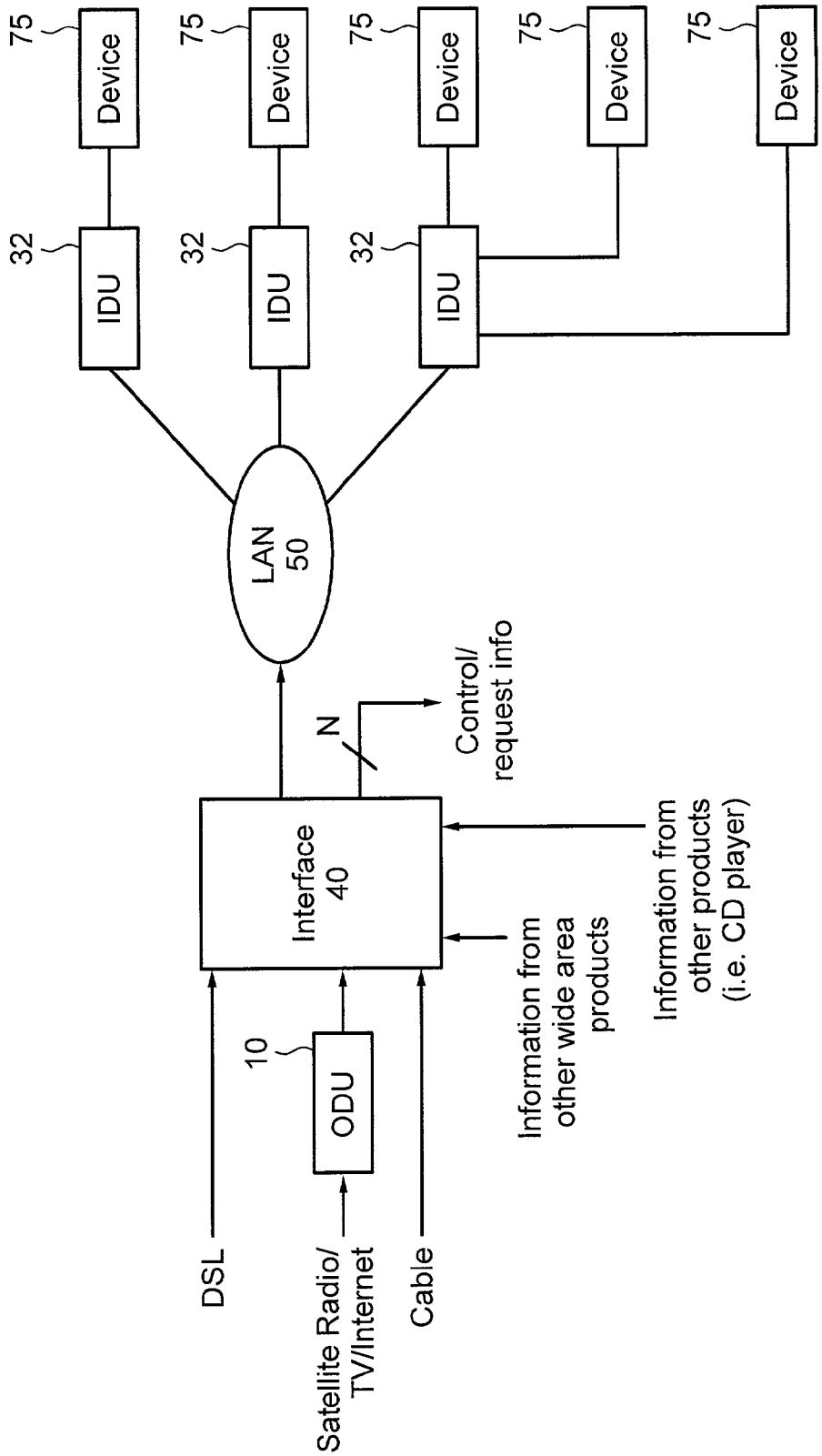
75
Device
32
IDU
LAN
50
Interface
40
N
Control/
request info
Information from
other products
(i.e. CD player)
Information from
other wide area
products
10
ODU
DSL
Satellite Radio/
TV/Internet
Cable

FIG. 10

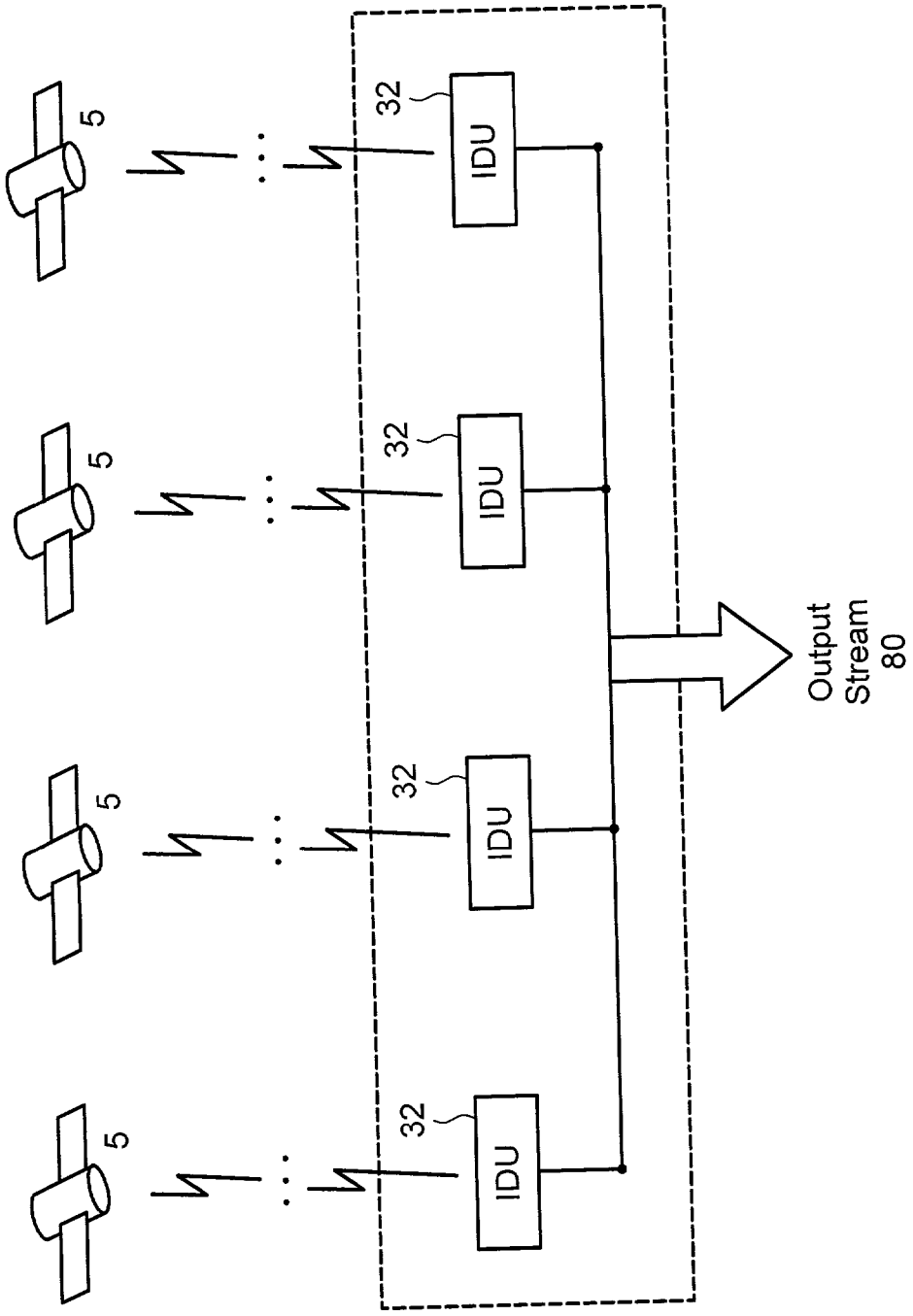

FIG. 11

LAN BASED SATELLITE ANTENNA/SATELLITE MULTISWITCH

BACKGROUND OF THE INVENTION

[0001] 1. Field of the Invention

[0002] This invention relates generally to the connection of a satellite antenna to multiple indoor units (IDUs), and more specifically, to an interface which connects at least one satellite antenna to multiple indoor units by means of a local area network (LAN).

[0003] 2. Description of the Related Art

[0004] Satellite antennas generally comprise a parabolic dish preferably constructed of metal, which reflects and focuses the incoming signals toward a feedhorn. The feedhorn is a device that is positioned in front (usually supported by an arm structure) for gathering the focused signal and sending it to a Low Noise Block converter (LNB). The LNB converts a whole band, or block, of frequencies received from the feedhorn into a lower band, while also providing electronic amplification of the received signal. Together, the satellite antenna, feedhorn, and LNB may comprise what is called an outdoor unit (ODU).

[0005] Coaxial cables connect the LNB of the ODU at the satellite antenna to an indoor unit (IDU), which is a unit that may comprise a receiver or a transceiver allowing a user to receive and/or transmit data over the satellite network. One or more of the cables connecting the IDU to the LNB is used to supply the LNB with power, while data is communicated between the LNB and the IDU through one or more other cables.

[0006] As satellite based services continue to evolve, the number of cables required for communicating data between the LNB and the IDU will increase. Already, satellite services, which include digital television subscription services such as DIRECTV®, can require multiple cables between the ODU and the IDU. For example, subscribers who also want to view local stations may be required to connect an analog antenna to the ODU for receiving analog radio or television signals (which should be captured and digitized prior to further processing). In this case, even more cables are required for connecting the LNB and the antenna outputs, respectively, to the receiver and local antenna feed of the subscriber's television.

[0007] Other satellite based services are currently offered which use different cables for different satellites, different polarities, and different functions (for example, both a data transmit and data receive cable) to connect the ODU and the IDU. Additional services may further require multiple transmit and receive cables. Services currently envisioned for the near future may require up to five or ten cables.

[0008] It is a common practice to use a multiswitch in a satellite communication system to connect multiple LNB outputs to one or more IDUs. Such LNB outputs may originate from the same satellite antenna (e.g., from a dual LNB), or from multiple proximate antennas that receive/transmit satellite signals for IDUs at a common location (the term ODU may be used to represent such multi-antenna configurations as well as single antenna configurations). A multiswitch can either be located at, or mounted at a location remote from, the ODU. A separate cable is used for connecting each LNB output to the multiswitch, and a separate cable is output from the multiswitch to each IDU. The multiswitch is responsible for connecting the correct LNB to each IDU, as commanded by the IDU. Further, the multiswitch can be used to split a LNB output among two different IDUs.

[0009] For example, a multiswitch can be used to allow multiple people living in a residential building (e.g., house or apartment building) to watch different satellite television channels at the same time using a single satellite antenna. In such a configuration, a dual band signal is received by a dual LNB (or by two separate LNBs mounted on the antenna), and each LNB output is connected to the multiswitch, which splits the satellite signal among a plurality of receivers in the building. Assuming that there are four people living in the building, each requiring a separate receiver, a total of at least five cables must be installed between the multiswitch and the building. This includes the four cables connecting the multiswitch to each receiver, as well as a power cable connecting the multiswitch to a power source (e.g., wall outlet) within the building.

[0010] For the conventional satellite communication system described above, the addition of new services after the initial installation of the system can be quite inconvenient. Each new service may require one or more additional cables to be connected between the ODU (either directly from an LNB or from a multiswitch) and the IDU corresponding to the new service. With respect to the example discussed above, if a person living in the building wanted to receive satellite based Internet service (e.g., DIRECPC® or any other information, such as streaming audio and/or video or voice over IP) to his/her home, a new cable must be installed between the multiswitch and a new receiver connected to the person's personal computer (PC). The installation of such cables in a building can be quite complex, expensive and time consuming.

[0011] Further, conventional satellite systems can be quite inflexible. The number of IDUs that can be connected to a multiswitch is limited. When all of the outputs of the multiswitch are occupied, the addition of new services and/or new IDUs would necessitate a reconfiguration of the ODU. Also, current multiswitches are only able to feed each output of a dual LNB into a limited number of receivers. For instance, many of the available multiswitches can distribute a dual LNB output to two different receivers, resulting in a limit of four receivers being connectable to each dual LNB. To allow for more receivers, one would be required to install at least one additional LNB or multiswitch.

[0012] It would be advantageous to simplify the installation of multiple IDUs at a particular site, while reducing the number of cables required for such an installation. It would also be advantageous to substantially increase the number of IDUs that can access a single ODU. Further, it would be advantageous to allow for new IDUs and/or new services to be installed at a particular site without needing to install more cables.

SUMMARY OF THE INVENTION

[0013] The present invention provides an interface that connects the plurality of LNB outputs to a local area network (LAN), which is connected to each IDU at a particular site. In particular, for each LNB at the ODU side, the interface of

the present invention includes a receiver that converts the radio frequency (RF) signal from the LNB output into digital baseband information. This digital baseband information from each LNB output can be filtered, compressed and encrypted by the interface before being multiplexed together and sent by means of the LAN to the corresponding IDUs. The data can be sent to directly to its intended IDU using point-to-point communications, or alternatively, can be broadcast to each IDU.

[**0014**] A first aspect of the present invention embodies an apparatus acting as an interface between a satellite antenna and a plurality of IDUs in a satellite communication system. This interface device includes a cable connection to each LNB output of the antenna, similar to a conventional multiswitch. Unlike a multiswitch, however, the interface device requires at most two additional cables, regardless of the number of IDUs in the system. One of these cables connects the interface device to a power source, while the other cable is a connection to a wired LAN, which is further connected to all of the IDUs. In this aspect, the interface device may include a processor that runs a set of protocols for controlling the transmission of data over the network. Further, the interface device may be built into the satellite antenna, or alternatively, may be configured as a standalone device within or outside of a building housing the IDUs.

[**0015**] A second aspect of the present invention is directed to an apparatus acting as an interface between a satellite antenna and a plurality of IDUs, which requires only cable connections to each LNB output and the power source. In this aspect, the interface device and IDUs are connected together through a wireless LAN. Accordingly, the interface device includes an RF transmitter/receiver to transmit to and receive data from the wireless LAN. Each IDU also includes either an RF transmitter/receiver, or an RF receiver, depending upon whether or not the IDU is operative to transmit data via the satellite network. Similar to the first embodiment, the interface device also includes a processor that runs a set of protocols for controlling the transmission of data over the network.

[**0016**] A third aspect of the present invention is directed to a device acting as an interface between the satellite antenna and a plurality of IDUs, similar to either the first and second aspects, the only difference being that the interface device, or other device connected to the LAN, runs a server application that stores data received by the satellite antenna. Accordingly, an IDU can access the server application via the LAN and download the stored data.

[**0017**] This aspect of the present invention is particularly well suited for the delivery of video or other types of data, on demand. For example, a satellite antenna and interface device according to this aspect can be implemented on an airplane to receive content such as movie, music, etc. from a content provider over a satellite network. The content can be stored in a server inside the airplane and available over an LAN. In this example, a passenger can plug a laptop computer into a jack near his/her seat, and be able to download and play movies or music for a fee. The present invention can provide similar services in a cruise boat, train, or any location, which includes many potential customers and which cannot feasibly communicate to content providers over physical communication lines.

[**0018**] A fourth aspect of the present invention is directed to the relationship between satellites and outdoor units (ODUs). For example, each satellite may transmit to a specific ODU or more than one satellite may transmit to the same ODU. In a similar manner, one or more satellites could transmit to the same ODU. An ODU which is fed by multiple satellites may be considered a "super" ODU.

[**0019**] A fifth aspect of the present invention is directed to using the interface and/or the LAN as a converter. Although the original signal received by the ODU is a particular type of signal, the LAN or the interface may supply the information to IDUs via a different connectivity. This different connectivity may include internet connections (either wired or wireless), DSL, cable modem, T1, phone line (either phone LAN, DSL, or cable), power line or other type of connection.

[**0020**] A sixth aspect of the present invention is directed to the use of a gateway, which permits the IDU to transmit to devices and/or LAN over any type of connection. As described above, these connection could be any of the previous types of connections.

[**0021**] A seventh aspect of the present invention is directed to the use of the interface acts as an converter and/or concentrator. The interface may receive information from any number of connections, such as DSL, satellite, cable, among others. The interface may also receive information from other wide area products and from other devices such as CD players. The interface may convert and/or concentrate the received information for forwarding to the LAN **50**. The interface may also include outgoing connections for sending control/request information to any of the information sources.

[**0022**] An eighth aspect of the present invention is directed to chaining together one or more IDUs **32** such that the throughput of one or more IDUs may be combined together and dynamically allocated to produce one or more output streams, larger than that which could be produced by any one IDU alone. The larger output stream may be supplied to any number of devices which require extra throughput.

[**0023**] Advantages of the present invention will become more apparent from the detailed description given hereafter. However, it should be understood that the detailed description and specific examples, while indicating preferred embodiments of the invention, are given by way of illustration only, since various changes and modification within the spirit and scope of the invention will become apparent to those skilled in the art from this detailed description.

BRIEF DESCRIPTION OF THE DRAWINGS

[**0024**] The features and advantages of the invention will be more readily understood from the detailed description given below and the accompanying drawings, which are given for the purposes of illustration only, and thus do not limit the present invention.

[**0025**] **FIG. 1** illustrates a typical satellite communication system in which the apparatus of the present invention can be used.

[**0026**] **FIG. 2** illustrates an exemplary embodiment of the present invention, which includes an interface device connecting the LNBs of an ODU to multiple IDUs using a wired LAN.

[0027] **FIG. 3** illustrates an exemplary embodiment of the present invention where an interface device connects the LNBs of an ODU to multiple IDUs using a wireless LAN.

[0028] **FIG. 4** illustrates an exemplary embodiment in which the present invention includes a server application to store and provide content on demand to a plurality of IDUs.

[0029] **FIG. 5** is a block diagram of the interface device according to an exemplary embodiment of the present invention.

[0030] **FIGS. 6 and 7** illustrate exemplary embodiments of various relationships between satellites and ODUs.

[0031] **FIG. 8** illustrates an exemplary embodiment in which one or more elements of the present invention act as a data converter.

[0032] **FIG. 10** illustrates an exemplary embodiment in which one or more elements of the present invention is utilized as a converter and/or concentrator.

[0033] **FIG. 11** illustrates an exemplary embodiment in which the output of a plurality of elements of the present invention are aggregated and dynamically allocatable.

DETAILED DESCRIPTION OF EXEMPLARY EMBODIMENTS

[0034] Referring to the drawings, **FIG. 1** illustrates a typical satellite communication system in which the apparatus of the present invention can be used. **FIG. 1** shows an ODU **10** including satellite antennas **11**A and **11**B for receiving signals transmitted by satellites **5**. Each of antennas **11**A, **11**B is comprised of a dish (preferably, metal), which focuses the received signal to feedhorn **12**. After collecting the focused signal, the feedhorn **12** directs the signal to one or more LNBs **13**. The LNBs **13** of antennas **11**A and **11**B amplify and send the signal via cables **22** to multiswitch **20**. It is noted that the LNBs **13** may also be from the same antenna (**11**A or **11**B).

[0035] As shown in **FIG. 1**, ODU **10** provides satellite based services to a particular site **30** (usually some type of building, for example, a house, apartment or office building, etc.), which includes multiple IDUs. The multiswitch **20** is connected to a power source **31** and various IDUs **32**A and **32**B situated within site **30** by cables **24**. In the illustrative example of **FIG. 1**, the signal received by antenna **11**A is split and distributed by multiswitch **20** to IDUs **32**A, while the signal received by antenna **11**B is sent to IDU **32**B. For example, IDUs **32**A may comprise a set of receivers, while **32**B may be a receiver connected to a PC for receiving Internet signals from a satellite based Internet service provider (ISP).

[0036] In the satellite communication system illustrated in **FIG. 1**, the satellite signals may already be encrypted when they are received by ODU **10** and sent to the IDUs **32**A and **32**B. Accordingly, IDUs **32**A and **32**B may comprise Integrated Receiver Decoders (IRDs), which include a processor for decrypting or descrambling the received signal. Further, IRDs may perform other functions, such as providing an electronic program guide (EPG) or recording certain programs on satellite TV signals.

[0037] **FIG. 2** illustrates an exemplary embodiment of the present invention where an interface device **40** connects the LNB **13** of an ODU **10** to multiple IDUs in conjunction with a wired LAN **50**. The ODU **10** includes one or more satellite antennas **11**, each of which includes one (or more) LNB **13**. The LNB outputs are then connected via cables **22** to the interface device **40**. Interface device **40** includes two output cables, including a power cable **25** connected to power source **31** within site **30**, and a LAN connection **27** that is connected to LAN **50** running through site **30**. The LAN **50** is connected to a plurality of IDUs **32**. **FIG. 2** as illustrated shows a dedicated cable **27** for the LAN connection. An existing cable, such as power cable **25**, could also be used for the LAN connection.

[0038] The interface device **40** may be configured as part of the ODU **10**, as shown in **FIG. 2**, and may even be integrated into a satellite antenna **11**. Alternatively, the interface device **40** may be located apart from the ODU **10**, either inside the building **30** (such as an attic) or at another outdoor location (such as on the roof). The interface device **40** may receive a single cable **22** from each LNB **13** at ODU **10**. The interface device **40** may be connected to the ODU **10** via transmission cables (not shown). The transmission cables may allow the interface device **40** to send a signal to a satellite antenna **11**, which is configured to transmit the signal to another site via satellite **5**.

[0039] As shown in **FIG. 2**, each IDU **32** is associated with one or more satellite services. Such services may include satellite television **70**, satellite based Internet service for a device **71**, diagnostics/maintenance of appliances **72**, and home security **73**. Services such as appliance diagnostics/maintenance **72** and home security **73**, may require data to be measured or collected at their corresponding IDUs **32** and transmitted back to a central processing location (not shown) for analysis. Conventional satellite communication systems (e.g., the system illustrated in **FIG. 1**) would require both a receiving and transmitting cable to connect these IDUs **32** to the multiswitch **20**. However, by connecting the interface device **40** to each IDU **32** via LAN **50**, the interface device **40** can both transmit and receive data from all of the IDUs **32** connected to a single data bus.

[0040] **FIG. 5** is a block diagram of the interface device **40** according to the exemplary embodiment shown in **FIG. 2**. The LNBs **13** of an ODU **10** are connected via cables **22** to input/outputs ports on an LNB interface **41**. The LNB interface **41** is connected to a received signal processing and encryption unit **44** and a transmission signal processing unit **42**, which are both connected to a network protocols and services processing unit **45**.

[0041] The elements of the LNB interface **41** may be conventional elements, such as a tuner/demodulator pair for processing an input from each cable **22**. The tuner/demodulator pair processes an RF input from each cable **22** and produces a corresponding digital output. The digital outputs from each tuner/demodulator pair are multiplexed together and sent to the received signal processing and encryption unit **44**. Similarly, the output from the transmission signal processing unit **42** is demultiplexed into plural inputs, sent to tuner/modulator pairs for conversion back into RF signals and sent out of cables **22**.

[0042] Processing units **42**, **44**, and **45** are all connected to a controller **43**. The network protocols and services processing unit **45** is connected to LAN interface **46**. LAN cable **27** connects the LAN interface **46** to the wired LAN **50**.

[0043] It should be noted that the transmission signal processing unit **42**, received signal processing and encryption unit **44**, network protocols and services unit **45**, and controller **43** may comprise separate hardware units. Alternatively, a single processor **48** (designated by the dotted line in **FIG. 5**) may be configured to perform the functions of processing units **42-45**. The interface device **40** may be configured as any combination of hardware and software units for performing the functions shown in **FIG. 5**.

[0044] Further, the interface device **40** shown in **FIG. 5** merely illustrates an exemplary embodiment, and is in no way limited to including each functional block shown. For example, if a particular site **30** contains no IDUs **32** for transmitting data via satellite **5**, then the interface device **40** need not include the transmission signal processing unit **42**. Further, the interface device **40** may perform additional functions not shown in **FIG. 5**, as contemplated by those skilled in the art.

[0045] The operation of the interface device **40** will now be described in connection with **FIGS. 2 and 5**. Once the RF signal transmitted by a satellite **5** is received into a particular LNB **13**, the signal may be sent to a corresponding input/output port of LNB interface **41**. The RF signal may then be sent to the received signal processing and encryption unit **44**, where the signal is converted into a digital baseband signal. The received signal processing and encryption unit **44** may perform other signal processing on the baseband signal, such as filtering noise and other unwanted information. In addition, the received signal processing and encryption unit **44** may encrypt the digital baseband signal, such that only IDUs having a certain decryption key will be able to decrypt the signal and access the information contained therein.

[0046] The processed digital signal may then be sent to the network protocols and services processing unit **45**, which assembles the data into message packets, determines the destination address of each packet, and controls the transmission of such packets according to a set of network protocols. The specific software for running these network protocols may be stored in controller **43**. The message packets are then transmitted to the LAN **50** through LAN interface **46** and LAN cable **27**.

[0047] In an exemplary embodiment, the network protocols and services unit **45** may employ point-to-point communications to transmit packets of the baseband signal directly to the IDU **32** for which the signal is intended (e.g., signals are sent directly to the receiver at the site **30**). The network protocols and services unit **45** may alternatively broadcast data packets to every IDU **32** in site **30**. In this alternative embodiment, each IDU **32** may include a processor for examining the received packet and determining whether the data in the packet is intended for that IDU **32**, or for another. Further, the network protocols and services processing unit **45** may be configured to choose between point-to-point or broadcast transmission of each baseband signal packet.

[0048] The network protocols and services unit **45** may also receive packets from the LAN **50**, via LAN interface **46**, which contain data to be transmitted to another site **30** over the satellite network. Accordingly, the network protocols and services unit **45** can reassemble the packets into the original digital baseband signal. The reassembled signal may be sent to transmission signal processing unit **42**, where it is processed and converted back into an RF signal, suitable for transmission. The converted RF signal is then sent back to a transmitting antenna via LNB interface **41** and cable **22**.

[0049] In an exemplary embodiment, the data being transmitted from an IDU **32** to the interface device **40** may be encrypted before transmission. Accordingly, the transmission signal processing unit **42** would then be capable of decrypting the base band signal reassembled by the network protocols and services unit **45**, before converting the data into an RF signal.

[0050] As described above, controller **43** may be used to store the software needed for employing a particular set of network protocols. In addition, the controller **43** can be used as a buffer, especially when multiple satellite signals are being received by the interface device **40** at the same time. The buffer allows for units **42**, **44**, and **45** to process the received signals one at a time, perhaps according to a first-come, first-served basis or based on a priority assigned to each type of signal. Such assigned priorities may also be stored in a table in controller **43**.

[0051] According to the embodiment illustrated in **FIG. 2**, the wired LAN **50** is preferably configured as a baseband network, such as Ethernet, token ring, ARCNET, USB, USB2, **1394** or FDDI. Such networks can be implemented by connecting the interface device **40** and each IDU **32** to a common data bus running through the site **30**. This configuration avoids the need of installing a separate cable between a multiswitch **20** and each IDU **32** within the site. Therefore, multiple satellite services can be implemented in a particular site **30** without requiring multiple cables running throughout the site **30**.

[0052] Further, a new IDU **32** can be easily installed at site **30** by merely connecting the IDU **32** to the data bus. In addition, unlike multiswitches **20**, whether the interface device **40** has a free port for connecting to another IDU **32** is not an issue. Accordingly, the present invention is flexible for adding new satellite based services at a specific site **30**.

[0053] In a further exemplary embodiment, the wired LAN **50** may employ the Transmission Control Protocol/Internet Protocol (TCP/IP) and include a connection to the Internet, for example, through high-speed leased lines or through a telephone wires connected to an Internet Service Provider (ISP). In such an embodiment, satellite based Internet service, such as DIRECPC®, may be provided to IDUs **32**, which comprise receiver components connected to, or installed in, PCs or other processing devices. However, according to this embodiment, satellite Internet services are not limited to IDUs **32** connected to PCs. Such an IDU **32** may be connected to a television, personal digital assistant (PDA), or any other electronic device through which a user can access the Internet.

[0054] Some satellite Internet services are currently configured such that requests for digital content are transmitted from a subscriber's PC over a modem and telephone lines to an ISP and others are two-way satellite connections. In response to a request, the Internet server forwards the digital content to a location, where the digital content is uploaded to a satellite **5** and downloaded directly to the subscriber's PC. Such services provide very high-speed transmission of content from an Internet server to the PC. This embodiment may be particularly useful for applications requiring high

data transmission rates, such as viewing streaming video, listening to streaming music or audio programs, etc.

[0055] By utilizing the wired LAN **50** of the present invention, a plurality of IDUs **32** (PCs) configured for satellite Internet service can receive content from the same satellite antenna **11** without requiring a plurality of cables running from the ODU **10** to the IDU. Further, each IDU **32** can transmit requests over the same cable connection, which connects the data bus of LAN **50** to the ISP.

[0056] Further, the present invention is in no way limited to satellite Internet services, where requests must be transmitted over a physical cable to the ISP. In another exemplary embodiment, requests for digital content may be transmitted from an IDU **32** over the LAN **50** to interface device **40**, which forwards the request to an antenna **11** for transmission to a satellite **5**. Accordingly, the satellite **5** may relay the request to a satellite antenna **11** of a satellite based ISP.

[0057] **FIG. 3** illustrates another exemplary embodiment of the present invention where an interface device **40** uses a wireless LAN to connect the LNBs **13** of ODU **10** to multiple IDUs **32** of a particular site **30**. The elements of ODU **10**, as well as the connections between ODU **10** and the interface device **40**, are similar to those shown in **FIG. 2**. Additionally, similar to the embodiment of **FIG. 2**, power cable **25** connects the interface device **40** to power source **31**.

[0058] In **FIG. 3**, the interface device **40** includes an RF signal transmitter/receiver **42** for transmitting data to and/or for receiving data from each of the IDUs **32** over the wireless LAN. The RF transmitter/receiver **42** of the interface device **40** replaces the LAN cable **27** illustrated in **FIGS. 2 and 5**. Each of the IDUs **32** includes an RF signal transmitter/receiver **34** for receiving data transmitted by the interface device **40**. If a particular IDU **32** does not require the capability of transmitting data over the satellite communication network, then the RF transmitter/receiver **34** for the IDU **32** may be operable only to receive RRF signals.

[0059] In the exemplary embodiment of **FIG. 3**, the network protocols and services processing unit **45** of the interface device **40** may broadcast each baseband signal packet to all of the IDU transmitter/receivers **34**. A processor within each IDU **32** can examine the received packets and determine whether or not the data was intended for the IDU **32**. Alternatively, each IDU transmitter/receiver **34** can be configured to receive signals on different frequencies, and the interface device **40** can employ point-to-point communication by transmitting directly to an IDU **32** over the frequency corresponding to the IDU's transmitter/receiver **34**.

[0060] In order to protect the privacy of the data packets being transmitted over the wireless LAN, the data packets may be encrypted before being transmitted from the interface device **40** to any of the IDUs **32**, or vice versa. Each IDU **32** may therefore include an encryption/decryption key, for decrypting messages sent from the interface device **40** and for encrypting messages to be sent back to the interface device **40**. Encrypting the data being transmitted over the wireless LAN can protect the data from being intercepted by neighbors, or anyone within close proximity of the site **30**, who has a receiver.

[0061] The use of a wireless LAN as illustrated in **FIG. 3** provides even greater flexibility for the satellite communication system of the present invention. This embodiment allows for new services, and accordingly, new IDUs **32** to be installed at any location, without concern as to whether a connection to the LAN data bus is accessible from the location. The embodiment further allows for portable, wireless IDUs **32** to be used within site **30**.

[0062] In another exemplary embodiment of the present invention, a combination of a wired LAN and wireless LAN may be used to connect the interface device **40** to each of the IDUs **32** at a particular site **30**. For example, a data bus may be used to connect multiple IDUs **32** together. The data bus may further be connected to an RF transmitter/receiver, which transmits and receives RF signals to and from an interface device **40** that includes a transmitter/receiver **42**. In addition, other IDUs that include RF transmitters/receivers **34** may be installed in the site **30** to communicate with the interface device **40**.

[0063] **FIG. 4** illustrates an exemplary embodiment in which the present invention includes a server application to store and provide content on demand to a plurality of IDUs **32**. The configuration of **FIG. 4** is very similar to that of **FIG. 2**, the only difference being that a server application **36** and storage device **38** are connected to wired LAN **50** in site **30**. However, it should be noted that this embodiment could also be implemented in the wireless LAN configuration shown in **FIG. 3**. It is further noted that the storage device **38** need not be part of the LAN **50**, but merely accessible by the LAN **50**. It is further noted that the server application **36** and/or the storage device **38** could be part of the interface **40**.

[0064] The server application **36** may comprise a software application being run on any computer or processing device that includes data storage of adequate size. For example, the server application **36** may be executed on a processor **48** within an interface device **40**, which has been modified to include the storage device **38**.

[0065] According to this exemplary embodiment, a signal is transmitted via satellite **5** to the ODU **10**, which sends the received signal to the interface device **40**. The interface device **40** then sends the satellite data to the server application **36**, which stores the data in storage device **38**. Any of the IDUs **32** may send requests to the server application **36** over the wired LAN **50** for accessing the data stored in storage device **38**. If the server application **36** accepts a request from an IDU **32**, the data will be downloaded to the requesting IDU **32** over the LAN **50**. In a further exemplary embodiment, the server application **36** may accept an IDU's request only after the user of the IDU **32** agrees to pay a fee for downloading the requested data.

[0066] The embodiment described above may be used to provide a video-on-demand (or other type of digital content on-demand service) to a plurality of consumers at a particular site **30**. For instance, the site **30** may comprise an airplane, where each passenger seat includes a communication port connected to an installed wired LAN **50**. In this embodiment, each passenger may be allowed to plug a network cable (e.g., Ethernet cable, twisted pair cable, etc.) into the port at his/her seat, and plug the other end of the cable into a laptop computer (which acts as an IDU). A satellite antenna **11** located on the airplane can be used to request and receive digital content (for example, movies, music, video games or other software applications) via satellite **5** from a content provider. This content provider

may be a server maintained either by the airlines or by a commercial digital content providing service. A server application **36** within the airplane may store the received digital content in storage device **38**, and any passenger can authorize the payment of a fee (using a credit card or some other form of electronic payment) to download the digital content from the server application **36** to the passenger's laptop computer. The passenger may then view, listen to, or play the digital content on his laptop during the flight. It is further noted that each of the teachings above with regard to a "movable MDU" could also be applicable to any of the standard, non-moving MDU embodiments described herein.

[**0067**] In such an application, a wide variety of movies, music, games, etc., may be pre-stored in storage device **38** of the server application **36**. When the passenger makes a selection and authorizes payment, the chosen digital content may be downloaded from the server application **36** directly to the passenger's laptop computer.

[**0068**] Alternatively, the server application **36** may initially store only a menu of digital content choices that are available for the passengers. At such time that a passenger requests and pays for one of the digital content choices, the server application **36** may communicate a request via satellite antenna **11** to receive the selected piece digital content from the content provider. Once the selected digital content is received, the server application **36** will commence downloading of the content to the requesting laptop and store the digital content in the storage device **38**. The next laptop computer requesting that particular piece of digital content would then be able to immediately download it from the server application **36**. Whenever the storage space on storage device **38** becomes full, the server application **36** can choose to discard a stored piece of digital content based on the amount of time that has elapsed since the content was last requested (or by some other type of criteria). While this alternative does not limit the number of available digital content choices according to the storage capacity of storage device **38**, it may cause passengers to wait longer for downloading a piece of digital content that has not yet been transmitted from the content provider to the server application **36**. The digital content on-demand application described above is in no way limited to implementation on airplanes. The present invention can be used to provide digital content on-demand services in MDUs, cruise boats, trains, buses, or other sites **30** that cannot support a physical cable link to a digital content provider. Also, such an application may be implemented by the present invention at any site where a satellite link to a digital content provider would be more practical or provide better performance (e.g., transmission speed) than a cable link.

[**0069**] **FIGS. 6 and 7** illustrate other preferred embodiments of the present invention. As illustrated, the relationship between satellites **5** and ODUs **10** may be varied. For example, in **FIG. 6**, each satellite **5** transmits to a specific ODU **10**, whereas in **FIG. 7**, more than one satellite **5** is capable of transmitting to the same ODU **10**. In a similar manner, one or more satellites **5** could transmit to the same ODU **10**. The ODU **10** which is fed by multiple satellites **5** may be considered a "super" ODU. The embodiment of **FIGS. 6 and 7** are directed to multiple ODU configurations with wired/wireless LAN **50** connectivity to multiple IDUs in cases where multiple ODUs are present, each capable of pointing at a different satellite **5**.

[**0070**] The architecture between the ODUs **10**, interfaces **40**, LAN **50**, and IDUs **32** of **FIGS. 6 and 7** may be replaced with any one of the architectures described in other embodiments of the present invention. For example, the ODU **10** of **FIG. 3** or **FIG. 4** could be utilized in the embodiments illustrated in **FIGS. 6 and 7**. Similarly, the LAN **50** of FIGS. **2** or **3** could also be utilized as the LAN **50** in **FIGS. 6 and 7**.

[**0071**] **FIG. 8** illustrates yet another embodiment of the present invention, where interface **40** and/or LAN **50** may act as a converter. In particular, as illustrated in **FIG. 8**, although the original signal received by the ODU **10** is a satellite signal from satellite **5**, the LAN **50** (as shown in **FIG. 8**) or the interface **40** may supply the information to IDUs **32** via a different connectivity. For example, connections **100** may be internet connections (either wired or wireless), DSL, cable modem, T1, phone line (either phone LAN, DSL, or cable), power line or other type of connection. Similarly, connection **102** could be any one of these other types of connections. It is noted that the LAN **50** may also be within the MDU **200**, albeit possibly in a telco closet, or other suitable location.

[**0072**] **FIG. 9** illustrates a variation on the embodiment of **FIG. 8**, wherein each IDU **32** includes a gateway **34**A and/or a gateway **36**A, which permits the IDU **32** to transmit to devices **75** and/or LAN **50** over any type of connection **104**. As described above, connection **104** could be any of the previous types of connections.

[**0073**] **FIG. 10** illustrates yet another embodiment of the present invention, where the interface **40** acts as an converter and/or concentrator. As illustrated in **FIG. 10**, the interface **40** may receive information from any number of connections, such as DSL, satellite, cable, among others. The interface **40** may also receive information from other wide area products and from other devices such as CD players. The interface **40** may convert/concentrate the received information for forwarding to LAN **50**. Interface **40** may also include outgoing connections for sending control/request information to any of the information sources illustrated in **FIG. 10**.

[**0074**] **FIG. 11** illustrates yet another preferred embodiment of the present invention, where one or more IDUs **32** are chained together such that the throughput of one or more IDUs may be combined together and dynamically allocated to produce one or more output streams **80**, larger than that which could be produced by any one IDU alone. The larger output stream **80** may be supplied to any number of devices **75** which require extra throughput.

[**0075**] It is noted that in a preferred embodiment, the ODU **10** is located outside on a building top and the interface device **40** is located inside relatively close to the ODU **10**, for example in an attic or other storage space of the building. However, the interface device **40** could also be located outside as an integral part of the ODU **10**. Further, the LAN **50** (wired or wireless) may be located near the interface device **40** or nearer to the IDUs **32**. It is also contemplated that the transmitter/receiver **42** could be an integral part of the ODU **10** or the interface device **40**.

[**0076**] It is further noted that although the various embodiments of the present invention have been described in conjunction with satellite originated services, other services,

including cable services are also contemplated as being within the scope of the present invention. It is further noted that one or more of the disclosed embodiments may be advantageously implemented in a multi-unit dwelling, such as an apartment building, condominium, cruise ship or other similar arrangement.

[**0077**] It is further noted that the IDUs **32** of the present invention may be connected to the wired or wireless LAN **50** via any number of technologies. These technologies include power line technology, phone line technology, standard internet technology (either wired or wireless, phone LAN, DSL, or cable). These technologies may be substituted, where appropriate, throughout the various embodiments of the present application as it would be known to one of ordinary skill in the art.

[**0078**] It is further noted that the wired LAN **50** may be configured with any type of wire arrangement, for example, a dedicated wire arrangement, such as a twisted pair or coaxial cable arrangement, or a non-dedicated arrangement, such as piggybacked on power, telephone, or other preexisting lines.

[**0079**] It is further noted that the types of data to be delivered are infinite, including, but not limited to, audio, video, streaming audio and/or video, voice, data, and/or voice over data and may provide a system of "always on" connectivity at every location serviced by the LAN **50**.

[**0080**] It is further noted that the interface **40** may be used in place of or in addition to a cable modem DSL or other hardware that connects the input data feed of any kind to an IDU.

[**0081**] Further, although the IDUs have been illustrated as being separate entities from devices **70**, **71**, **72**, **73**, and **75**, the IDU **32** could also be integrated into one or more of these devices **70**, **71**, **72**, **73**, and **75**.

[**0082**] Still further, it is noted that one or more of the variations described above in conjunction with the exemplary embodiments of the present invention have been showed with respect to particular elements. However, one of ordinary skill of the art, when presented with the teachings outlined above, could apply these teachings to other elements of the present application.

[**0083**] For example, the wired LAN **50** and standalone IDUs of **FIG. 2** could be used in any of the embodiments illustrated in **FIGS. 1 and 3-11**. Similarly, the wireless LAN **50** of **FIG. 3** could be used in any of the embodiments illustrated in FIGS. **1-2** and **4-11**. Likewise, the server application **36** of **FIG. 4** could be used in any of the embodiments illustrated in FIGS. **1-3** and **5-11**.

[**0084**] The relationship between satellites and ODUs **10** of **FIGS. 6 and 7** could also be used in any of the embodiments illustrated in FIGS. **1-5** and **8-11** and/or be applied to any other elements, such as ODU **10**/interface **40**, interface **40**/LAN **50**, LAN **50**/IDU **32** and/or IDU **32**/devices **70**, **71**, **72**, **73**, and **75**. The conversion between LAN **50** and IDUs **32** of **FIG. 8** and/or the conversion between IDU **32** and devices **70**, **71**, **72**, **73**, and **75** of **FIG. 9** could also be used in any of the embodiments illustrated in FIGS. **1-7** and **10-11** and/or be applied to any other elements, such as ODU **10**/interface **40**, interface **40**/LAN **50**, LAN **50**/IDU **32** and/or IDU **32**/devices **70**, **71**, **72**, **73**, and **75**.

[**0085**] The conversion and/or concentration functions performed by the interface **40** of **FIG. 10** could also be used in any of the embodiments illustrated in FIGS. **1-9** and **11** and/or be applied to any other elements, such as ODU **10**, LAN **50**, or IDU **32**. Additionally, the dynamic allocation of IDU outputs into output stream **80** could also be used in any of the embodiments illustrated in FIGS. **1-10** and/or be applied to the input and/or output of any other elements, such as ODU **10**, interface **40**, or LAN **50**.

[**0086**] The present invention being thus described, it will be obvious that the same may be varied in many ways. Such variations are not to be regarded as a departure from the spirit and scope of the invention, and all such modification as would be obvious to one skilled in the art are intended to be included within the scope of the following claims.

We claim:

1. A satellite communication system, comprising:

at least one satellite antenna for receiving a signal transmitted from a satellite, wherein said satellite antenna includes at least one Low Noise Block (LNB) converter;

an interface device including a connection to said LNB, and further including a connection to a local area network (LAN) connecting together a plurality of indoor units (IDUs), wherein said interface device converts said transmitted signal received from said LNB into a digital baseband signal to be transmitted across said LAN to at least one of the plurality of IDUs.

2. The satellite communication system of claim 1, wherein said digital baseband signal is transmitted from said interface device to said at least one of the plurality of IDUs according to point-to-point communications across said LAN.

3. The satellite communication system of claim 1, wherein said digital baseband signal is broadcast from said interface device to each of the plurality of IDUs across said LAN.

4. The satellite communication system of claim 1, wherein said LAN comprises a wireless LAN.

5. The satellite communication system of claim 1, wherein said LAN comprises a wired LAN which connects said plurality of IDUs to said interface device through a common data bus.

6. The satellite communication system of claim 5, wherein said wired LAN is made up of dedicated connections including twisted wire pairs or coaxial cables.

7. The satellite communication system of claim 5, wherein said wired LAN is made up of shared connections including power or telephone connections.

8. The satellite communication system of claim 1, wherein said LAN employs Transmission Control Protocol/Internet Protocol (TCP/IP).

9. The satellite communication system of claim 1, further comprising

a storage device connected to said LAN for storing said digital baseband signal; and

a server application for downloading data comprising at least a portion of the stored digital baseband signal one or more IDUs of the plurality of IDUs, according to a request for said downloaded data by said one or more IDUs.

10. The satellite communication system of claim 8, wherein said request includes an authorization for payment of a fee.

11. The satellite communication system of claim 1, wherein said interface device receives digital baseband signals from one or more of the plurality of IDUs, converts said received digital baseband signal into a transmission signal, and outputs said transmission signal to an antenna configured to transmit data to a satellite.

12. The satellite communication system of claim 1, wherein at least one of said IDUs comprises a receiver for a satellite television application.

13. The satellite communication system of claim 1, wherein at least one of said IDUs comprises a transmitter/receiver for a satellite Internet service.

14. The satellite communication system of claim 1, wherein at least one of said IDUs comprises a transmitter/receiver for a satellite home security application.

15. The satellite communication system of claim 1, wherein at least one of said IDUs comprises a transmitter/receiver for a satellite appliance diagnostics/maintenance application.

16. The satellite communication system of claim 1, wherein said plurality of IDUs are located in different units of a multidwelling unit.

17. The satellite communication system of claim 7, wherein said storage device is external to said LAN.

18. An apparatus for interfacing one or more Low Noise Block converters (LNBs) of at least one satellite antenna to a plurality of indoor units (IDUs), comprising:

at least one first port for connection to each of the one or more LNBs;

a signal processing device for converting signals received through said at least one first port into digital baseband signals;

and a second port for connection to a local area network (LAN) for transmitting said digital baseband signals to one or more of the plurality of IDUs through said LAN.

19. The apparatus according to claim 18, further comprising

a device for processing said digital baseband signals according to network protocols employed by said LAN.

20. The apparatus according to claim 19, wherein said network protocols include Transmission Control Protocol/Internet Protocol (TCP/IP).

21. The apparatus according to claim 18, wherein said digital baseband signals are transmitted point-to-point to said one or more of the plurality of IDUs through said LAN.

22. The apparatus according to claim 18, wherein said digital baseband signals are broadcast to each of the plurality of IDUs through said LAN.

23. The apparatus according to claim 18, wherein said apparatus receives digital baseband signals transmitted from one or more of the plurality of IDUs through said LAN.

24. The apparatus according to claim 23, further comprising:

a second signal processing device for converting said received digital baseband signals into transmission data,

wherein said transmission data is output to one or more of the LNBs through the at least one port connected to one or more of the LNBs.

25. A satellite communication system, comprising:

at least one satellite antenna for receiving a signal transmitted from a satellite, wherein said satellite antenna includes at least one Low Noise Block (LNB) converter;

an interface device including a port, connectable to said LNB, and a transmitter/receiver for transmitting to and receiving from a wireless local area network (LAN) connecting together a plurality of indoor units (IDUs), wherein said interface device converts said transmitted signal received from said LNB into a digital baseband signal to be transmitted across said LAN to at least one of the plurality of IDUs.

26. The satellite communication system of claim 25, wherein at least one of said IDUs comprises a receiver for a satellite television application.

27. The satellite communication system of claim 25, wherein at least one of said IDUs comprises a transmitter/receiver for a satellite Internet service.

28. The satellite communication system of claim 25, wherein at least one of said IDUs comprises a transmitter/receiver for a satellite home security application.

29. The satellite communication system of claim 25, wherein at least one of said IDUs comprises a transmitter/receiver for a satellite appliance diagnostics/maintenance application.

30. The satellite communication system of claim 25, wherein said plurality of IDUs are located in different units of a multidwelling unit.

31. A satellite communication system, comprising:

at least one satellite antenna for receiving a signal transmitted from a satellite, wherein said satellite antenna includes at least one Low Noise Block (LNB) converter;

an interface device including a first port, connectable to said LNB, and a second port connectable to a wired local area network (LAN) connecting together a plurality of indoor units (IDUs), wherein said interface device converts said transmitted signal received from said LNB into a digital baseband signal to be transmitted across said LAN to at least one of the plurality of IDUs.

32. The satellite communication system of claim 31, wherein at least one of said IDUs comprises a receiver for a satellite television application.

33. The satellite communication system of claim 31, wherein at least one of said IDUs comprises a transmitter/receiver for a satellite Internet service.

34. The satellite communication system of claim 31, wherein at least one of said IDUs comprises a transmitter/receiver for a satellite home security application.

35. The satellite communication system of claim 31, wherein at least one of said IDUs comprises a transmitter/receiver for a satellite appliance diagnostics/maintenance application.

36. The satellite communication system of claim 31, wherein said plurality of IDUs are located in different units of a multidwelling unit.

37. The satellite communication system of claim 1, wherein at least one of said satellite antennas receives a signal from one satellite.

38. The satellite communication system of claim 1, wherein at least one of said satellite antennas receives a signal from more than one satellite.

39. The satellite communication system of claim 1, wherein said at least one satellite antenna converts the received satellite signal for delivery to the plurality of IDUs via a non-satellite connection.

40. The satellite communication system of claim 39, wherein the non-satellite connection is one of a DSL, cable modem, T1, a phone line, or power line connection.

41. The satellite communication system of claim 1, wherein said interface device converts the received satellite signal for delivery to the plurality of IDUs via a non-satellite connection.

42. The satellite communication system of claim 41, wherein the non-satellite connection is one of a DSL, cable modem, T1, a phone line, or power line connection.

43. The satellite communication system of claim 1, wherein at least one of the plurality of indoor units (IDUs) includes at least one gateway for converting a signal from the local area network (LAN) to a different format.

44. The satellite communication system of claim 43, wherein the different format is one of a DSL, cable modem, T1, a phone line, or power line connection format.

45. The satellite communication system of claim 1, said interface device further receiving information from other wide area products or other devices.

46. The satellite communication system of claim 45, said interface device further converting or concentrating the information received from other wide area products or other devices for forwarding to the local area network (LAN).

47. The satellite communication system of claim 45, said interface device further outputting control or request information to the other wide area products or other devices.

48. The satellite communication system of claim 45, wherein outputs of two or more of the plurality of indoor units (IDUs) are dynamically combined to provide a larger bandwidth output stream.

* * * * *