Satellite Direct-to-Home

STEPHEN P. DULAC, SENIOR MEMBER, IEEE, AND JOHN P. GODWIN, SENIOR MEMBER, IEEE

Invited Paper

An overview of satellite direct-to-home (DTH) digital television in the Americas is presented, including history, service applications, and a reference architecture identifying key system building blocks. Satellite DTH's relationship to and differences from terrestrial ATSC are highlighted. The paper concludes with notes on the technology evolutions that allowed the introduction of digital DTH satellite service and contribute to its continued growth today.

Keywords—*Consumer electronics, digital communication, digital TV, satellite broadcasting, video signal processing.*

I. INTRODUCTION

Consumers worldwide enjoy digital television from many sources today: terrestrial broadcasts, cable and satellite systems, high-speed Internet connections and a variety of recorded and prerecorded media such as DVDs. It is satellite distribution that provided consumers their first widespread opportunity to enjoy digital television, however, beginning in the United States in 1994.

II. OVERVIEW OF DIGITAL SATELLITE DEVELOPMENTS

A. History

All direct-to-home (DTH) system designs, whether analog or digital, have benefited from the fundamental advantages of satellite delivery—versus, for example, terrestrial broadcasting—that can be summarized as follows:

— line-of-sight transmission through the use of microwave frequencies, directive antennas, and high elevation angles;
— consistent picture quality across all channels received;
— broad, national coverage (and hence availability to reach customers in low density, rural areas).

Although satellite DTH television delivery was the dream of futurists for decades, little technological progress was made before 1980. DTH service in the United States began, serendipitously, in 1979, when the FCC declared that receive-only terminal licensing was no longer mandatory and individuals started installing dishes, initially with a diameter >4 m, to receive signals intended for distribution to cable head-ends. From roughly 1985 to 1995, millions of 2–3-m dishes were purchased by individuals to receive these analog cable feeds. Although the dish installations could cost several thousand dollars, the feeds were initially available without a monthly charge. Reference [1] discusses the various DTH business startup attempts in the 1980s that would have used smaller dishes, but planned to charge a monthly fee. None were financially successful. The major challenges of all system designs have been the need to generate, within project cost constraints, sufficient satellite power levels into a practical dish size, and the need for reception electronics requirements consistent with consumer electronics price expectations.

The digital DTH satellite era began in 1994 and quickly captured the "big dish" market and other latent market demand. Table 1 summarizes satellite DTH growth in the United States over the last 20 years [2]–[6].

Table 1
U.S. DTH Households

Year-end figures in millions [2]-[6]
Households with service subscriptions

	'84	'89	'94	'99	'04
C-band (analog, 2-3m dish)	~.7	~2.7	2.2	1.6	.27
FSS Ku (digital, .90m dish)	---	---	.25	1.4*	---
BSS Ku (digital, .45m dish)	---	---	.35	10	24
Total Sat DTH	~.7	~2.7	2.8	13	24
Total TV Households	84.9	91.6	94.9	100.8	110.3
Sat DTH penetration	< 1%	3%	3%	13%	22%

*FSS Ku peaked at about 2.3 M subscribers during 1999.

Manuscript received April 7, 2005; revised August 26, 2005.
S. Dulac is with DirecTV, El Segundo, CA 90245 USA (e-mail: spdulac@directv.com).
J. Godwin is with Gretna Green Associates, Los Angeles, CA 90025 USA (e-mail: greenjack@aol.com).
Digital Object Identifier 10.1109/JPROC.2006.861026

0018-9219/$20.00 © 2006 IEEE

DISH 1018

1) Analog DTH: Reference [1] provides a thorough review of analog satellite DTH issues and solutions as of 1990. The link geometry for homes in the contiguous 48 states typically affords an elevation angle—i.e., line-of-sight angle above the horizon—of at least 30°. This geometry means that potential obstacles such as trees or adjacent houses are rarely an actual impediment. The link geometry also means that multipath from hills and buildings is not an issue, especially for the microwave frequencies used by DTH systems. Except for the era of big dish DTH, which used a *C*-band downlink of 4 GHz, all DTH systems in the Americas have operated in the higher frequency *Ku*-band. For regulatory purposes, the DTH bands are divided into "fixed satellite service" and "broadcasting satellite service" bands. For systems licensed in the Americas for the Broadcasting Satellite Service (BSS) [7], [8], the uplink frequencies are in the band 17.3–17.8 GHz and the downlink frequencies are in the band 12.2–12.7 GHz. For Fixed Satellite Service (FSS) systems in the United States, the most common uplink and downlink bands are 14.0–14.5 GHz and 10.7–11.2 GHz, respectively. In either band the primary link environmental impediment is moisture along the line of sight—that is, rain—that causes signal fades. This degradation can be sufficiently estimated to establish margins for practical system designs [9]. The DTH systems themselves cause *intra*-system interference, such as interference of cross-polarized signals at the same frequency, and *inter*-system interference, such as interference from satellites at neighboring orbital locations received via consumer receive dish side-lobes. Intersystem interference is illustrated in Fig. 2 and Fig. 3 of [1]. In many architectures, in particular those utilizing spot beams with frequency reuse, interference noise is the dominant noise source. Careful coordination via the ITU, the FCC, and other governmental agencies and direct coordination between system operators has kept interference to an acceptable level.

2) Advent of Digital: Around 1990, a number of key technologies had made sufficient progress to make all-digital satellite DTH economically practical. These developments provided numerous benefits unavailable with analog solutions, as follows:

— Smaller consumer dish size
— Tuning to dozens of channels without the need to repoint the dish
— More standard-definition(SD) television channels per unit Radio Frequency (RF) bandwidth
— More consistent quality and the potential for improved quality, such as HDTV, and increased number of services without an increase in the dish size
— New innovative services using a high-quality, high-speed digital path into multiple homes

Although the DTH system designers recognized that they could utilize progress in key areas such as video/audio coding and cost reductions in Very Large Scale Integrated (VLSI) circuit technology, several areas were recognized as fundamental technical system interfaces and constraints, as follows:

— Home DTH receiver outputs compatible with home off-air television inputs
— Consumer dish and outdoor electronics power and control via established interfaces
— Set-top boxes consistent with consumer electronics industry practice, such as use of wireless remote controls and adherence to UL safety guidelines
— RF link design, such as RF channel bandwidth and polarization reuse, should be consistent with existing FSS and BSS frequency plans

The first three constraints, along with a cost target, established many of the high-level requirements for the initial DTH home receivers. The last constraint set many fundamental requirements on the design of the RF portion of the uplink centers, the DTH satellites, and the tuner circuitry of the home receivers. For the BSS system designs, such as the DirecTV system that went online in 1994, the designers achieved compatibility with the ITU BSS Plan for the Americas, [7], [8], that based its intersystem interference planning on an analog FM implementation with 1 m receive dishes. Reference [10] provides additional perspective on first-generation digital DTH system designs, including a digital DTH link budget.

The major digital DTH systems in the Americas, as of January 2005, are summarized in Table 2.

B. Service Offerings

The "pay" business model of satellite DTH has created a technical role for the DTH service provider that has no counterpart in traditional advertising-supported terrestrial broadcasting.

Service and Technology Evolution: The DTH provider defines the services it believes to be compelling and then designs and deploys the infrastructure supporting that vision. For example, the DTH provider may set goals for the penetration of HDTV delivery. It then plans and implements the broadcast center and satellite resources and designs (or advocates the design) of the necessary customer receivers. Hence, each satellite DTH provider sets the direction and tempo of evolution of its delivery system. It may or may not tend to use open standards, but the service must be compelling, cost effective, and secure.

Customer Relationship: Each provider desires to create long-term customer relationships and the associated revenues associated with each successful relationship. The introduction of new services and receivers can attract new customers, but the needs of existing customers must also be accommodated. Hence, each new technology evolution can require a substantial investment in customer education, customer premises equipment provisioning and installation, and back-office systems, such as billing. For the U.S. providers, nurturing the customer relationship has been one of their great successes. A satellite DTH company has been selected as having the highest customer satisfaction rating among all multichannel programming providers for seven out of the last nine years [11].

DTH system service offerings include the following.

1) *Subscription TV*: The DTH providers offer channels on a tiered subscription basis—that is, most customers subscribe to a basic package of channels and one or more

DISH 1018

Table 2
Major Digital DTH Systems in the Americas (January 2005)

System	DIRECTV	Dish Network	Bell ExpressVu	Star Choice	Sky Brasil	Sky Mexico	DIRECTV Latin America
Website	www. directv.com	www. dishnetwork.com	www. bell.ca	www. starchoice.com	www. sky.tv.br	www. sky.com.mx	www. directvla.com
Service Area	USA	USA	Canada	Canada	Brazil	Mexico	South & Central America
Subscribers	14M	11M	1.5M	0.8M	1.1M	1.1M	.8M
Services							
Subscription	X	X	X	X	X	X	X
Per Per View	X	X	X	X	X	X	X
Local channels	X	X	X	X	X	X	X
HDTV	X	X	X	X			
DVR	X	X	X				
Interactive	X	X	X		X	X	X
Satellites							
Number in service	8	6	1	2	1	1	2
>1 orbit slots	Yes	Yes	No	Yes	No	No	No
Bands used (Ku = 10 to 17 GHz) (Ka >18GHz)	BSS Ku, FSS Ku FSS Ka	BSS Ku, FSS Ku	FSS Ku	FSS Ku	FSS Ku	FSS Ku	FSS Ku
Transmission							
Transport	System B	System A	System A	System C	System A	System A	System B
Program Guide (EPG)	Proprietary	System A with proprietary extensions	System A with proprietary extensions	Proprietary	System A with proprietary extensions	System A with proprietary extensions	Proprietary
CA Provider	NDS	Nagra	Nagra	Motorola	NDS	NDS	NDS
Middleware Provider	NDS	OpenTV	OpenTV		OpenTV	OpenTV	OpenTV
Reception							
Dish size (typical)	45 cm	45 cm	45 cm	60 cm	60 cm	60 cm	60 cm
Number of dishes	1 or 2	1 or 2	1	1	1	1	1

packages of premium channels, such as the HBO multiplex. Typically, the basic packages include access to an on-screen electronic program guide and a number of audio-only music channels. Specialty television subscriptions such as international channels are available. Subscriptions are also offered for series of events, such as all available games from a professional sports league.

2) *Pay per view (PPV)*: PPV services give customers the option to pick a specific program or series of programs and pay for the selected content as a one-time transaction. As indicated on their web sites (Table 2), the DTH systems provide extensive PPV offerings including theatrical films, concerts, and sports events such as prize fights. In certain cases, the PPV concept has been extended to selling viewing rights for a movie for an entire day rather than for a single showing.

3) *Local channel rebroadcasts*: To provide a seamless, high-quality experience, the satellite DTH services offer subscription packages of the local NTSC "off-air" stations. In the United States, by law [see sidebar on "U.S. Local Channels Regulatory Evolution"], these stations may only be rebroadcast into the same "local market" where they are broadcast terrestrially. By year-end 2004, Dish Network had announced that it

DISH 1018

In the late 1980's, local broadcasters in the U.S. were concerned about nationwide satellite delivery of national network broadcast programming, as it meant that viewers could watch network programming without watching their local network affiliate. Moreover, copyright holders (movie studios, sports leagues, etc.) argued that satellite carriers lacked copyright authority to engage in such retransmissions. In 1988 the U.S. Congress passed the Satellite Home Viewer Act (SHVA), which granted satellite operators copyright authority to deliver this programming, but allowed such delivery only to "unserved" households (e.g., the approximately 10% of the U.S. population not well-covered by local broadcasters' over-the-air signals).

For years, Satellite operators used this license to deliver signals originating from New York and Los Angeles to unserved households throughout the United States. By way of comparison, cable operators generally cannot deliver "distant signals" (that is, signals originating in a market other than that in which the subscriber resides). Thus, satellite operators typically delivered distant signals, but only to some subscribers, while cable operators typically delivered only "local signals" (that is, signals originating in the subscriber's local market) but to all subscribers.

By 1999 it was recognized that consumers would be better served, and the competitive playing field between satellite and cable operators would be more level, if satellite operators could, like cable, also redistribute local broadcast signals to all subscribers.. As a result, the Satellite Home Improvement Viewing Act (SHIVA) was passed, and within days, both U.S. operators began offering "local-into-local" services to the largest markets. While the more popular local stations will negotiate for carriage, SHIVA's "carry one, carry all" requirement obligates a satellite carrier to carry all qualified local stations in each DMA where it carries any such station.

Renewed for another five years in 2004 as SHVERA (Satellite Home Viewer Extension and Reauthorization Act), satellite DTH operators' rights to carry local broadcast stations are now more comparable to the rights enjoyed by cable operators. Satellite operators, like cable operators, now have the option to retransmit nearby out-of-market stations that are "significantly viewed" into certain communities in a market. But satellite operators, like cable operators, may generally no longer sign up new subscribers for distant signals in markets where they provide local signals. (SHVERA also banned a "two-dish" practice employed by one of the satellite operators, in which reception of stations that elected mandatory carriage required a second consumer antenna that wasn't installed unless requested by the consumer.)

These laws are codified in Title 17 of the United States Code, administered through the U.S. Copyright Office, as well as Title 47, for which the U.S. Federal Communications Commission (FCC) is responsible. At present the FCC is finalizing rules that define cable and satellite operators' rights and obligations for carriage of local broadcasters' signals as they transition from analog to digital ATSC broadcasts. For more information see www.copyright.gov and www.fcc.gov.

Sidebar: U.S. local channels regulatory evolution.

was rebroadcasting local channels into 152 markets representing 93% of the U.S. population, while DirecTV's totals were 130 markets and 92%.

4) *High-Definition Television (HDTV)*: Since the enjoyment of HDTV necessitates purchase of a relatively expensive HD monitor, HDTV viewership has grown slowly in the United States since ATSC terrestrial broadcasts were initiated in 1998 [12]. This geographically dispersed market proved an excellent new application for satellite DTH. Satellite receivers for HD decoding have been available since 1999. As they share many of the same processing functions, these receivers can typically decode an "off-air" ATSC signal as well. Most HDTV services are high-definition simulcasts of subscription, PPV, and local channel services already available in standard definition.
5) *Digital Video Recorders (DVRs)*: DVRs have proven to be an excellent ancillary application for satellite services. The aggressive marketing of new receiver types to "early adopters" gave the U.S. satellite service providers a majority of all DVR households at year-end 2004. The DVR application benefits from two basic satellite DTH service attributes, the availability of electronic program guide (EPG) information and of all-digital broadcasts. For a given program, as indicated in the EPG, the digital content can be directly recorded to a hard disk drive without the need to perform A/D conversion.
6) *Interactive*: The simplest interactive television services are not associated with any particular video services: for example, an electronic program guide, or screens displaying personalized and localized information, including weather, news, financial information, lottery results, and so on [13]. More complex interactive services are integrated with program video and as a result require more complex implementations. On-screen mosaics of multiple live channels and multicamera applications are examples of these applications.

   Special "middleware" receiver software is responsible for interpreting the received data and displaying the associated application. Due to the great complexity and the need for careful management of receiver resources, the technologies deployed to date by satellite DTH operators have used proprietary middleware implementations [Table 2]. Considerable work has been done to create standards for interactive services, and the ATSC "ACAP" standard [14] and the OpenCable "OCAP" standard [15] are noteworthy examples. As the services and technologies mature, these standards are likely to play a significant role in future digital DTH system implementations.
7) *Home Networking*: DTH providers' newest services feature satellite receivers with integrated home networking features, including support for connecting to a terrestrial broad-band path such as DSL. Networked receivers enable digital television to be recorded on one receiver and played on another. The linkage to the Internet permits remote DVR scheduling over the Internet and applications such as the transfer of electronic photos from cell phones to the family's home network [16].
8) *Special markets*: Although satellite DTH may be symbolized by the small roof-mounted antenna on a single-family home, the services provide programming for various special markets including the following:

DISH 1018

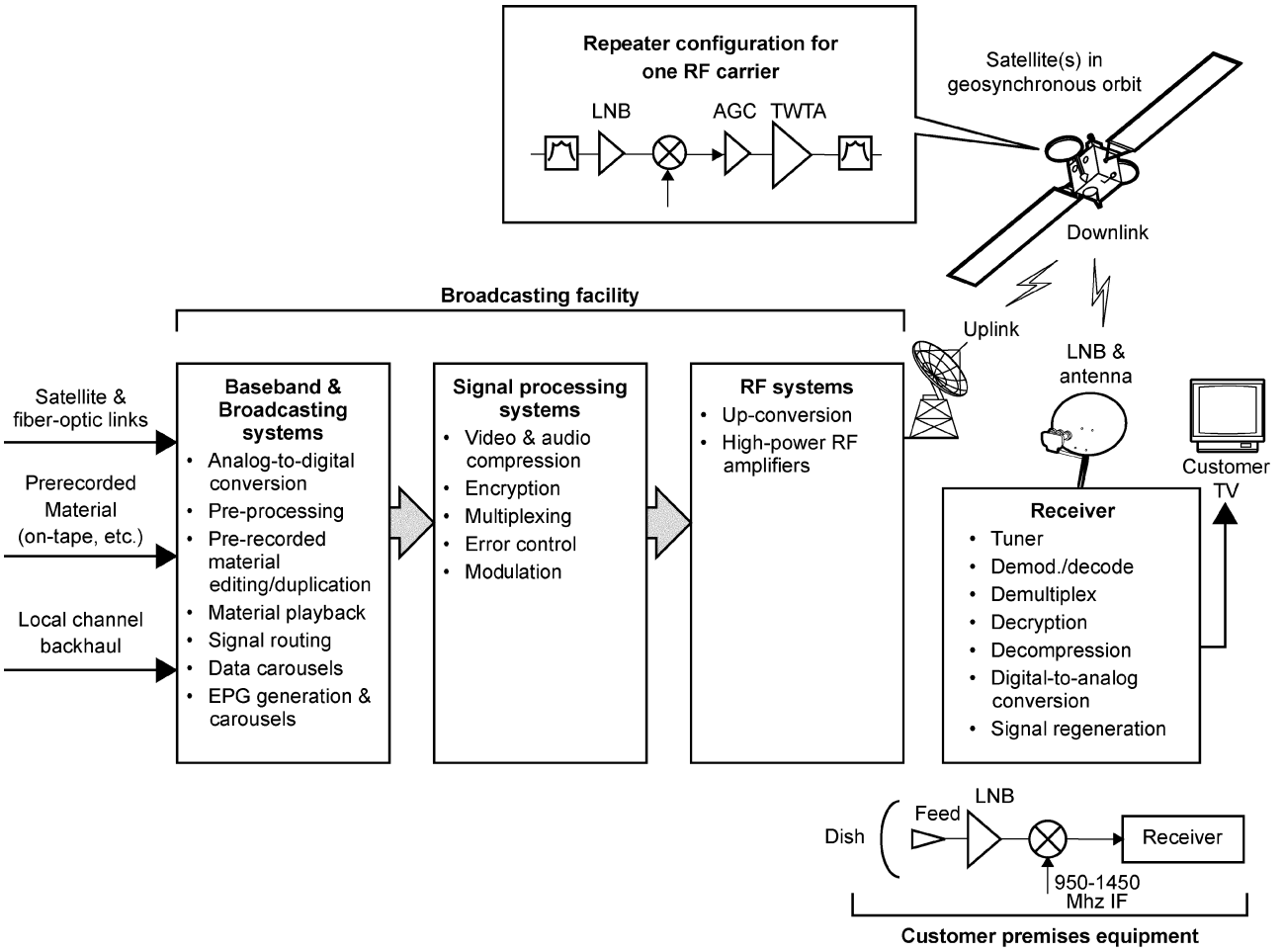

Fig. 1. All-digital multichannel satellite DTH system.

— multiple dwelling units—e.g., apartments and condos;
— hospitality market of hotels, bars, and restaurants;
— mobile vehicles [17];
— commercial aircraft [18].

III. Reference DTH System Architecture

Fig. 1 provides a simplified diagram of an all-digital multichannel satellite DTH system.

A. *Broadcasting Facility*

Most of the DTH subscription channels are delivered to the DTH broadcasting or uplink facility via existing "backhaul" satellites or fiber. These backhaul signals are often the same feeds used to deliver programming to other satellite and cable distributors. Some programming, such as theatrical films for PPV, arrives at the facility as prerecorded digital tapes.

The satellite delivery of local television channels has necessitated the use of in-market digital facilities to preprocess and backhaul, via leased terrestrial transmission facilities, the signals to a DTH broadcasting facility. Fig. 2 summarizes the components of a typical in-market backhaul solution.

The broadcasting facility provides a number of functions common to any broadcasting facility, such as incoming signal monitoring, adjustment, and resynchronization, signal routing within the facility, and for prerecorded content, quality control, cloning, and playback. The program content for most channels is unchanged by the facility. Certain channels, by agreement with the originator, may have commercials or promotional spots inserted at points identified, by in-band tones for example, by the originator. Prerecorded material is copied from digital tape masters to video file servers. The video servers use redundant arrays of independent disk (RAID) technology and play back the content on a digital satellite channel at a time established by the daily broadcast schedule.

The "pay" business model of DTH systems also requires that the broadcast site provide conditional access equipment in addition to service information/electronic program guide (SI/EPG) equipment, compression encoders, and multiplexing, error control, and modulation equipment. The conditional access system, which includes equipment within the home, permits customer access to programming services only when certain conditions are met—for example, the customer's account is in good standing and the customer is located in a geographic area where that particular programming is available per agreement with the content owner, e.g., is not subject to sports blackout. The SI/EPG equipment creates data streams that are used by the in-home electronics to display information about the programming channels and

DISH 1018

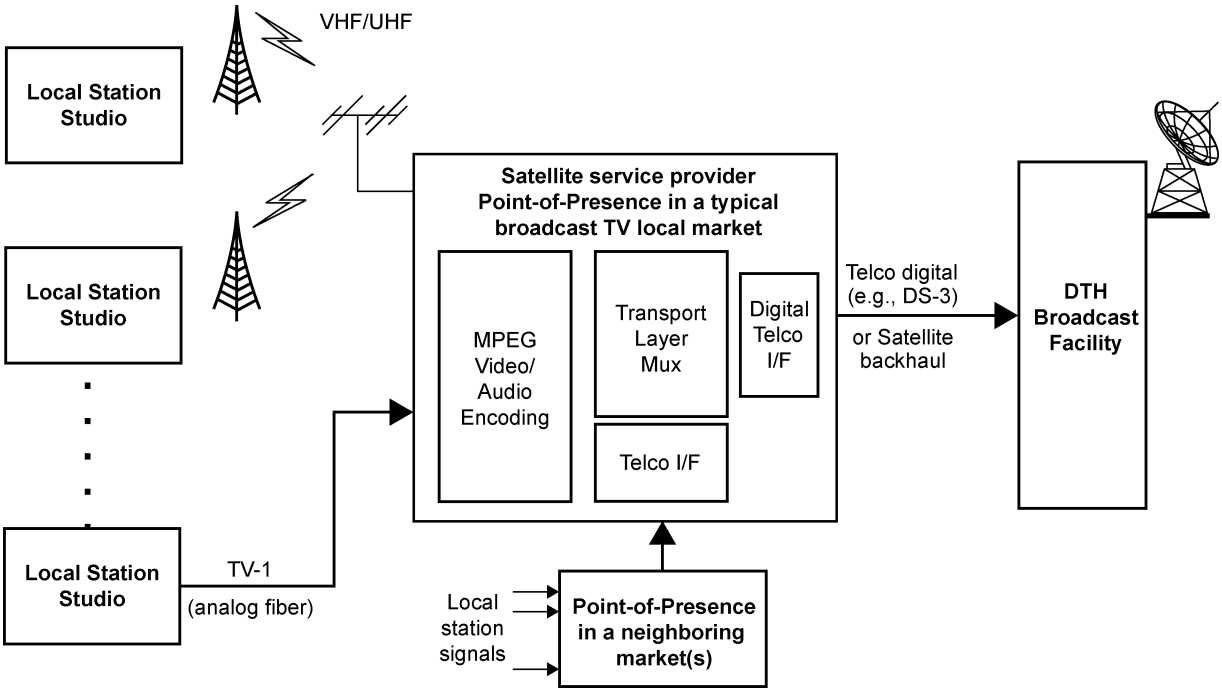

Fig. 2. In-market local television backhaul solution.

the individual programs. The EPG data typically include program title, start and end times, synopsis, program rating for parental control, alternate languages, and so on. The signal processing equipment performs redundancy reduction processing (compression) on both the television video and audio. Digital video/audio is typically routed within the broadcasting facility in the serial digital component format [19] at 270 Mb/s, but is reduced to the range of 1–10 Mb/s prior to transmission via compression encoding. This signal processing dramatically reduces the transmission path investment—in satellites, for example—and, conversely, also increases the entertainment channels available for a given amount of transmission bandwidth and investment. Most operational digital DTH systems in the Americas use the Motion Picture Experts Group (MPEG)-2 encoding standard or a proprietary system with nearly identical signal processing characteristics. The compressed video/audio streams from multiple programming channels are typically multiplexed into a single high-speed stream. Each of the constituent streams may have a fixed data rate or the individual channel rates can vary dynamically depending on their instantaneous "image complexity." The latter approach is called statistical multiplexing. With either method, the resultant stream is processed by forward error control (FEC) logic. The FEC method, often concatenating convolutional and block codes, provides excellent delivered quality at signal-to-noise thresholds below those available with previous analog methods. For systems deployed in the 1990s, quadrature phase shift keying (QPSK) modulation was used in virtually every instance in the Americas. This modulation is more bandwidth-efficient than binary PSK and is a constant envelope modulation and therefore appropriate for satellite transmission systems with repeater output stages driven into the limiting region.

B. Broadcasting Satellites

Each uplink signal from the broadcasting facility or facilities is received and rebroadcast by an RF "transponder" of a frequency-translating repeater on board a geosynchronous communications satellite. For BSS band operation, the satellite receives signals in the range 17.3–17.8 GHz [8], downconverts each signal by 5.1 GHz, and retransmits each signal in the range 12.2–12.7 GHz [7]. The satellites used in DTH systems are very similar in architecture to geosynchronous communications satellites that have been deployed for international and domestic telecommunications since the midsixties. For DTH systems, the satellites' greatly increased physical size and weight permit relatively high levels of received solar energy, and hence dc power, and relatively large onboard antennas enabling downlink beam shaping. Fig. 3(a) illustrates a typical DTH satellite as deployed in the 1990s [10], [20]–[22]. The configuration is dominated by the sun-oriented solar panels for dc power generation and the parabolic reflectors used to create the downlink beams.

Each satellite's communications "payload" is a microwave frequency-translating repeater. A broad-band front-end receiver, one per polarization, down-converts to the downlink frequency and drives multiple RF chains, one per carrier, with each RF chain or "transponder" having a high-power Traveling Wave Tube (TWT) transmitter [10]. Typically, each TWT amplifier has a saturated-power rating of 240 W [20]. The primary repeater functional elements are shown within Fig. 1.

In the United States, to increase the total available capacity, a single system operator often uses multiple satellites at a given orbital location and, additionally, multiple satellites at adjacent orbital locations. Multiple satellites at

DISH 1018

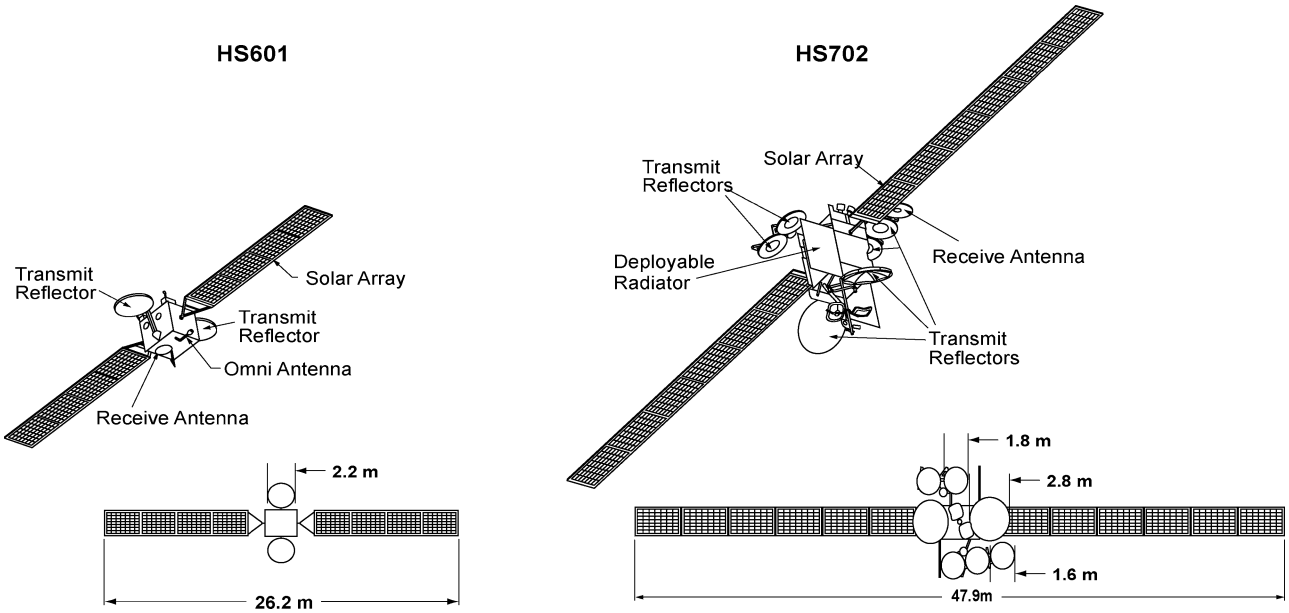

Fig. 3. Progress in satellite platforms provided more delivered bandwidth per spacecraft and bandwidth reuse via spot-beam technology. (a) D1 (HS601). (b) D11 (HS702).

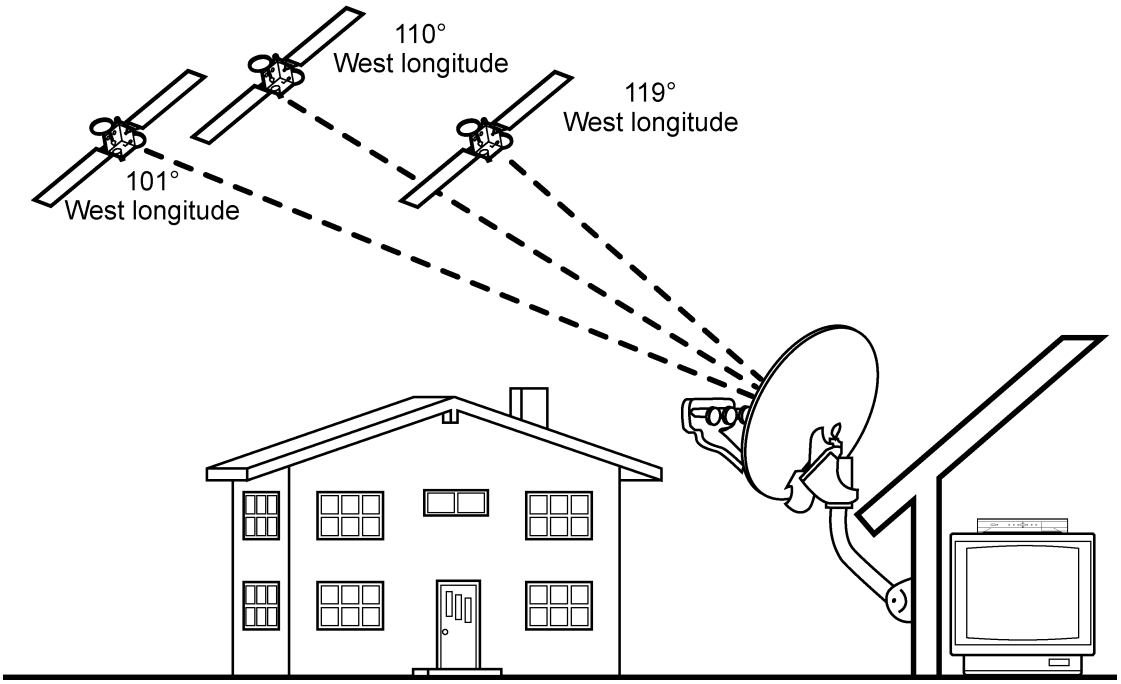

Fig. 4. Use of adjacent orbital locations permits spectrum reuse.

a single orbital location—actually, separated in longitude by at least 0.1°—gives full use of the available spectrum by effectively pooling the capabilities of several satellites. This implements the futuristic visions from past decades for massive "earth-facing communications relay platforms" without the necessity for a single physical vehicle. Use of adjacent orbital locations permits spectrum reuse by a single system operator. This is illustrated in Fig. 4.

C. *Customer Electronics*

As illustrated in Fig. 5, the DTH customer electronics consists of a small aperture antenna and low-noise block down-converter, an integrated receiver/decoder (IRD) unit (or simply "receiver") and a handheld remote control. The antenna is typically an off-set parabolic reflector in the range of 45–60 cm in diameter. The RF signal collected by the horn at the focus is coupled with a low-noise amplifier and then block downconverted to an *L*-band IF of 950–1450 MHz, or as wide as 250–2150 MHz for recent models. The "outdoor" electronics, shown diagrammatically within Fig. 1, receives low-voltage dc power via the same coaxial cable used to deliver the downconverted signal into the customer's home and, specifically, to the receiver. The receiver provides the many functions listed on the extreme right in Fig. 1. The

DISH 1018

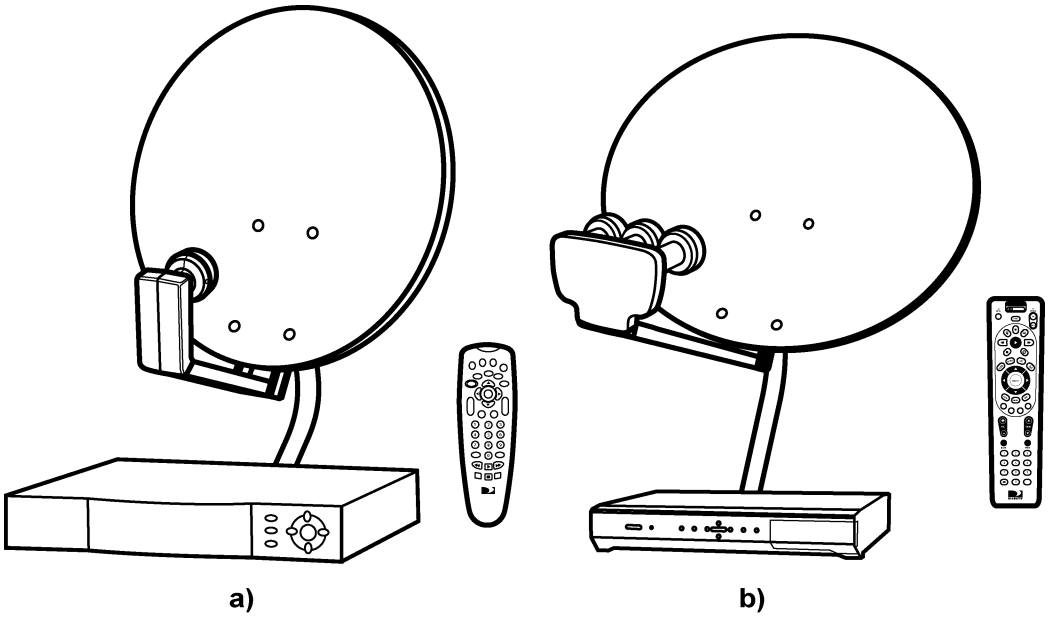

Fig. 5. DTH customer electronics. (a) ~1995. (b) ~2005.

unit's circuitry includes an IF tuner, a QPSK demodulator, FEC decoder, stream demultiplexer (to capture a single programming channel), decryptor under conditional access control, an MPEG video/audio decoder, and TV signal regenerator. In the Western Hemisphere, most DTH receivers also utilize a replaceable "smart card" with an embedded secure microprocessor used to generate cryptographic keys for decryption of the individual services. In the event that security is compromised, the system operator may only need to replace the smart card to allow economic upgrade of a portion of the conditional access logic instead of the far more costly replacement of entire receivers. The receiver outputs signals to various home entertainment devices such as standard definition and HD televisions and audio amplifier systems. The receiver may have front panel controls but it is routinely controlled via signals from a handheld remote control using IR, and in many cases RF, transmission.

ITU Recommendation ITU-R BO.1516 [23], published in 2001, presents a generic reference model for a digital DTH receiver. This model presents the common functions required in a satellite IRD and is reproduced here as Fig. 6. The reference model is arranged in layers, with the physical layer located at the lowest level of abstraction, and the services layer located at the highest level.

Terrestrial DTV receivers share these reference model functional elements, with notable differences that reflect both business and technical differences in these services.

— The physical and link layers of the terrestrial receiver are designed to support the antennas and modulations required for off-air (terrestrial) signal reception.
— The conditional access layer of the terrestrial receiver is optional, whereas in satellite systems all services, even local channel rebroadcasts, tend to be encrypted. While there are "digital-cable-ready DTVs" having decrypt capabilities, there are no "satellite-ready DTVs."
— The EPG and interactive service capabilities tend to be highly customized in a satellite receiver, to meet the competitive needs of the service operator.

IV. Common Functional Elements of Digital DTH Systems in the Americas

Beginning in 1994 and driven by business imperatives, the first digital DTH satellite systems were launched prior to the creation of industry standards for either modulation and coding or transport and multiplexing or for video and audio source encoding. Nevertheless, standards for the digital DTH application did follow, and there are four of note for the Americas: ITU System A/DVB (used by Dish Network, Sky Brasil, Sky Mexico, and Bell ExpressVu), ITU System B (used by DirecTV and DirecTV Latin America), ITU System C (used by Star Choice), and the more recent ATSC A/81 standard (adopted in 2003, but not yet in use).

A high-level description of the first three standards is presented in [23]; Table 3 excerpts some summary characteristics from Table 1 of that document, which correctly concludes that common receiver designs supporting all of these systems are possible. Note that as service offerings evolve, architectures of service providers in the Americas may diverge from these standards.

The ATSC A/81 specification [24] defines extensions to audio, video, transport, and PSIP subsystems as defined in ATSC Standards A/53B and A/65A. It also includes carriage of data broadcasting as defined in ATSC Standard A/90 without requiring extensions. Transmission and conditional access subsystems are not defined in A/81, allowing service providers to use existing subsystems.

V. Technology Evolution

Table 4 summarizes two decades of evolution in U.S. DTH systems.

DISH 1018

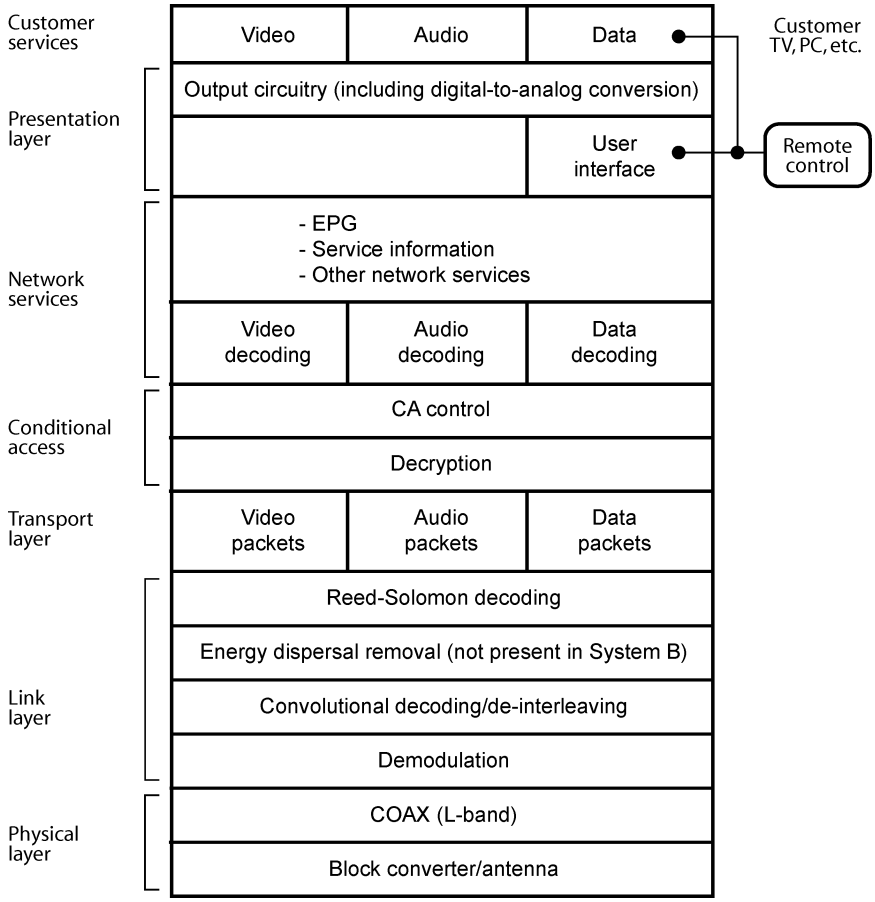

Fig. 6. Generic reference model for a digital DTH receiver (adapted from Fig. 1 of [23]. Reproduced with the kind permission of the ITU.).

A. *Analog to Digital Evolution*

The first decade of evolution, culminating in 1994 with the introduction of all-digital DTH, is marked by the maturation of four key technologies. These technologies combined to dramatically increase the number of standard-definition (SD) television channels offered while simultaneously reducing the receive antenna to easily manageable dimensions and allowing less expensive consumer equipment.

1) Video/Audio Encoding: Beginning in the late 1980s, experts from many organizations developed the MPEG-1 and MPEG-2 standards for video and audio "source coding," with the latter standard approved in 1995 [25]. This international effort meant that a tool kit capable of providing substantial compression gains could be reduced to commercial silicon with confidence that the chips would be used in mass-produced consumer electronics. The use of MPEG by most DTH systems in the Western Hemisphere contributed substantially to its early adoption.

2) Modulation and Error Control: Although concatenated coding for Forward Error Control was first recognized in the late 1960s [26], the earliest concatenated coding applications on a mass-market basis were digital DTH satellite systems [23].

3) Consumer Electronics: The 1.2-μm microelectronics feature size available in the early 1990s permitted low-cost implementation of the required MPEG and FEC processing. With "Moore's Law" improvements in digital memory and other circuits, the retail prices for DTH home electronics, including outdoor equipment, was below $700 by 1994.

4) Satellite Platforms: The early 1990s saw a new generation of satellite platforms specially designed for the DTH application. These satellites deployed sun-oriented solar panels developing >4 kW of dc power [21]. Also, in the early 1990s, satellite TWT amplifier designs began routinely using phase-combined conduction-cooled TWT pairs to generate the desired >200-W RF power levels. In contrast to earlier radiation-cooled single TWT solutions, the new approach achieved the target RF power with the reliability necessary for a commercial business venture. With an overall dc-to-RF conversion efficiency of about 50%, these early DTH satellites could each support eight 240-W TWTA transponders, providing ample signal strength into transmit antennas covering the 48 contiguous United States (CONUS) [20].

B. *Evolution Since 1994*

In the second decade of evolution, the various U.S. systems have substantially expanded their capacity and service offerings. In general, this evolution has not required major technology breakthroughs but rather the identification, customization, and deployment of the available technology most appropriate for the desired application.

1) Video/Audio Encoding: With a market demand for more HDTV channels, DTH systems are deploying MPEG-4

DISH 1018

Table 3
Summary of ITU DTH Formats as of 2001 (Excerpts From Table 1 of [23]. Reproduced With the Kind Permission of the ITU).

	System A	System B	System C
Modulation Scheme	QPSK	QPSK	QPSK
Symbol Rate	Not specified	Fixed 20Mbaud	Variable 19.5 and 29.3 Mbaud
Necessary bandwidth (-3 dB)	Not specified	24 MHz	19.5 and 29.3 MHz
Roll-off rate	0.35 (raised cosine)	0.2 (raised cosine)	0.55 and 0.33 (4th order Butterworth filter)
Reed-Solomon outer code	(204,188,T=8)	(146,130,T=8)	(204,188,T=8)
Interleaving	Convolutional, I=12, M=17 (Forney)	Convolutional, N1=13, N2=146 (Ramsey II)	Convolutional, I=12, M=19 (Forney)
Inner coding	Convolutional	Convolutional	Convolutional
Constraint Length	K=7	K=7	K=7
Basic code	1/2	1/2	1/3
Generator Polynomial	171, 133 (octal)	171, 133 (octal)	117, 135, 161 (octal)
Inner coding rate	1/2,2/3,3/4,5/6,7/8	1/2,2/3,6/7	1/2,2/3,3/4,3/5,4/5,5/6,5/11,7/8
Net data rate	23.754 to 41.570 Mbits/s given symbol rate of 27.776 Mbaud	17.69 to 30.32 Mbits/s at fixed 20 Mbaud symbol rate	16.4 to 31.5 Mbits/s given symbol rate of 19.5 Mbaud
Packet Size	188 bytes	130 bytes	188 bytes
Transport layer	MPEG-2	Non-MPEG	MPEG-2
Commonality with other media (i.e. terrestrial, cable, etc)	MPEG transport stream basis	MPEG elementary stream basis	MPEG transport stream basis
Video source coding	MPEG-2 at least main level / main profile	MPEG-2 at least main level / main profile	MPEG-2 at least main level / main profile
Aspect ratios	4:3 16:9 (2.12:1 optionally)	4:3 16:9	4:3 16:9
Image supported formats	Not restricted, Recommended: 720x576, 704x576 544x576, 480x576 352x576, 352x288	720x480, 704x480 544x480, 480x480 352x480, 352x240 720x1280, 1280x1024 1920x1080	720(704)x576 720(704)x480 528x480, 528x576 352x480, 352x576 352x288, 352x240
Frame rates at monitor (per s)	25	29.97	25 or 29.97
Audio source decoding	MPEG-2, Layers I and II	MPEG-1, Layer II; ATSC A/53 (AC3)	ATSC A/53 or MPEG-2 Layers I and II
Service information	ETS 300 468	System B	ATSC A/56 SCTE DVS/011
EPG	ETS 300 707	System B	User selectable
Teletext	Supported	Not specified	Not specified
Subtitling	Supported	Supported	Supported
Closed caption	Not specified	Yes	Yes

advanced video compression (AVC) [27] and audio compression [28] to reduce the required capacity per HD and SD channel by one-half. Existing MPEG-2 broadcasting and customer facilities for SD DTH signals are expected to continue to be used for some time because of the cost to replace tens of millions of fielded MPEG-2 receivers. One result of using MPEG-4 for retransmission of ATSC broadcasts via satellite is that the satellite DTH operator has no choice but to decode the MPEG-2 and reencode in MPEG-4, introducing an additional distortion source into the distribution chain. It is anticipated that, as the use of MPEG-4 technology increases, efficient transcoding schemes will be developed to mitigate this effect.

2) Modulation and Error Control: Again driven by an increased demand for HDTV, the DTH providers spearheaded the development of a new modulation and coding technique, DVB-S2 [29], that was approved and put into use beginning in 2005. This standard provides 8PSK modulation for

DISH 1018

Table 4
Evolution of U.S. DTH Systems

	1984-86	1994-96	2004-06
GENERAL			
Primary system application	Delivery to cable head-ends	Direct-to-Home	Direct-to-Home
Dish size	2 to 3 m	.45 to .90 m	.45 to .65 m
Receivers per home (typical)	1	1	2-4
Cost of home electronics	> $ 1000	< $700	< $100 per receiver (service provider cost)
Viewable TV channels per home (typical)	24 (plus additional channels given antenna re-pointing)	>200	> 200 plus >10 HD
Total TV channels	Dozens	>200	1000's
TRANSMISSION			
Downlink frequency	~ 4 Ghz	> 10 Ghz	> 10 Ghz
Downlink beam shape	Single 48-states beam plus some AK/HI coverage	Single 48-states beam plus some AK/HI coverage	48-states beam plus AK/HI coverage plus spots for local markets
Number of orbit locations per system	>10	1	>3
Total Satellites per System	N/A	Up to 3	More than 10
Video/audio encoding	None	MPEG 2 with statmux	MPEG 2 plus MPEG 4 for certain new services
Modulation & FEC	Analog FM	Reed-Solomon and convolutional codes, QPSK	Prior solution plus 8-PSK for certain new services
SERVICE OFFERINGS			
Subscription TV	X	X	X
Pay Per View TV	--	X	X
High Def TV	--	--	X
Interactive	--	--	X
Local Channels	--	--	X
Digital Video Recorders	--	--	X
Home Networking	--	--	X

highly nonlinear channels, the typical operating condition of a satellite transponder, and also 16-ary and 32-ary amplitude and phase shift keying modes for more linear applications. The standard's FEC uses a Bose–Chaudhuri–Hocquenghem (BCH) code concatenated with a low-density parity check (LDPC) inner code yielding performance within 0.7 dB of the Shannon limit. Fig. 7 shows the ~30% bandwidth efficiency of DVB-S2 versus the prior satellite solutions.

3) Outdoor Equipment: It is expected that the simplicity, low cost, and high performance of the offset fed parabolic dish will continue its prominence as the receive antenna technology for systems in the Americas. An alternative, the dual-circularly-polarized phased array antenna, remains more costly and is used only in very specialized applications such as truly mobile services—i.e., operation while in motion—for motor vehicles [17].

As illustrated in Fig. 5, outdoor equipment has increased in complexity, using conventional technology, by adding multiple feed/low noise amplifier/block down converter assemblies near the dish focal point. These additional assemblies give access to signals from additional orbital locations. Outdoor equipment giving the customer access to signals at three orbital locations, 101°, 110°, and 119° West longitude, was deployed in the United States beginning in 1999 (Fig. 5(b) presents an example of equipment that has been in use since 2002). Reference [30] presents key outdoor equipment electrical performance specifications.

4) Consumer Electronics: DTH systems continue to benefit from general cost/performance improvements in digital electronics and other specific progress in consumer and personal computer electronics. Fig. 8 shows an example of a DTH digital receiver for NTSC television reduced to two pri-

DISH 1018

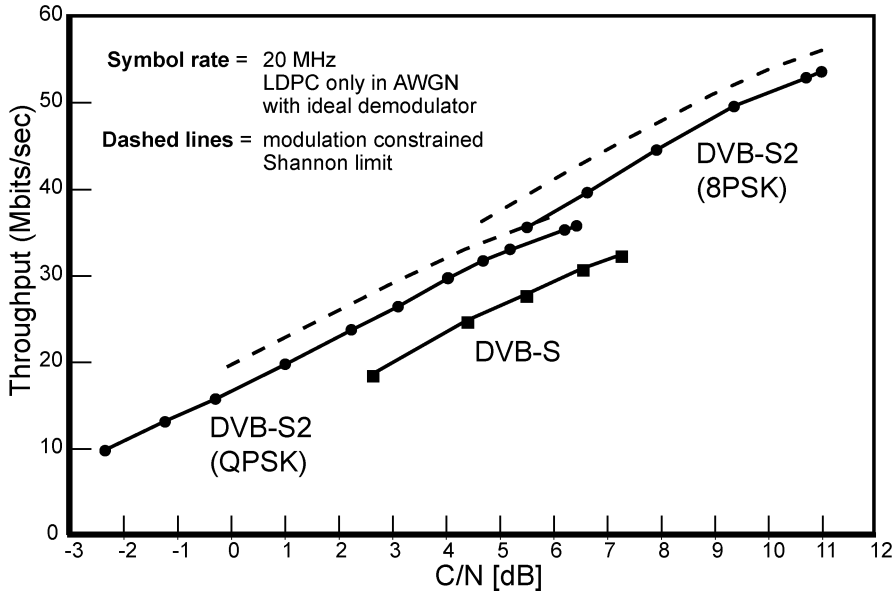

Fig. 7. DVB-S2 satellite modulation and coding [29] provides increased throughput per unit bandwidth.

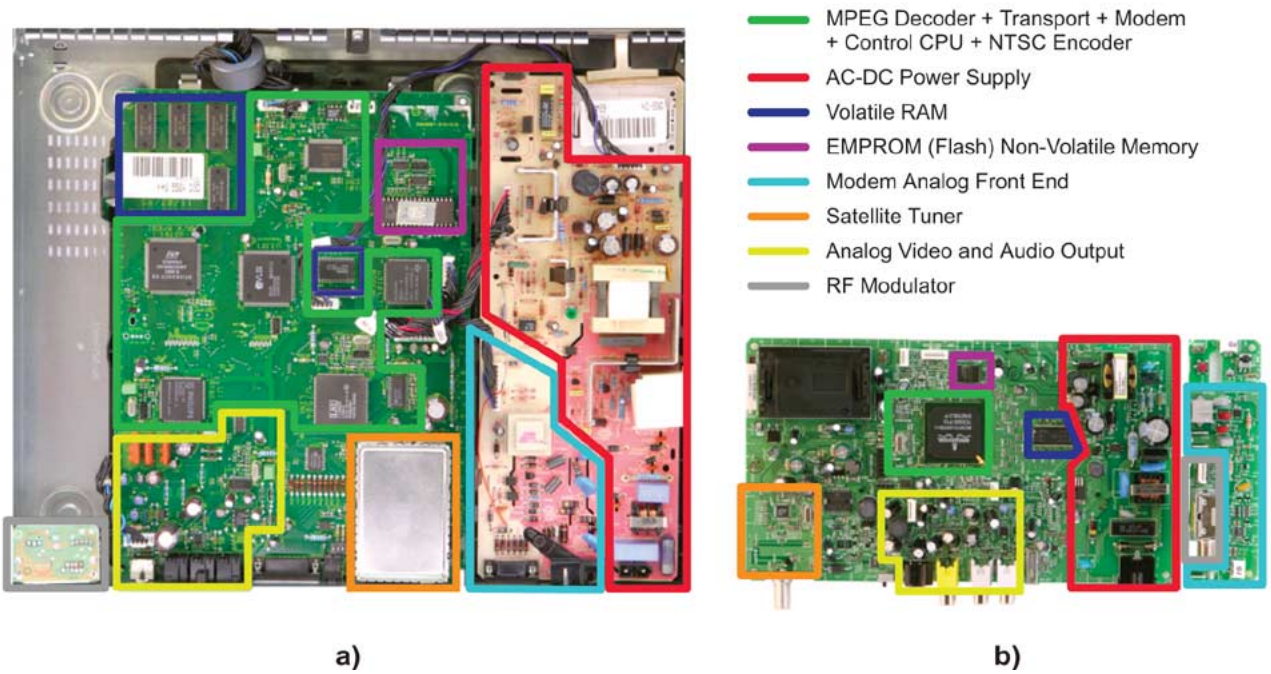

Fig. 8. Microelectronics progress increases processing capabilities while lowering cost. (a) ~1995. (b) ~2005. (Courtesy of Thomson Inc.)

mary chips using a 0.13-μm feature size. This improvement lowers the receiver "bill of materials" and production costs, improves product reliability, and reduces the space used in the customer's TV cabinet. The introduction of new technologies such as MPEG-4 and DVS-S2 increases the chip count and receiver cost; however, in a few years' time the same integration trend will apply to this new class of receiver.

It is common practice for the receiver to support secure software upgrades delivered as data files via the satellite. This allows a digital DTH operator significant flexibility to add (within the constraints of the receiver's hardware, of course) new functionality, and to correct software bugs. For example, a software download may occur as a result of additional satellites or transponders becoming available to a satellite operator. Confidence in the reliability of satellite-delivered receiver software delivery has increased to the point where a receiver may conceivably ship from manufacturer with only simple "bootstrap loader" software. This software guides the installer through the setup of the receiver and ODU and then authenticates and loads into memory additional software, downloaded via satellite on a continuously available data service.

With hard drive capacity improvements allowing cost-efficient storage of dozens of hours of standard-definition video by late 2000, integrated digital video recording became an important DTH application at the turn of the century. DVRs

DISH 1018

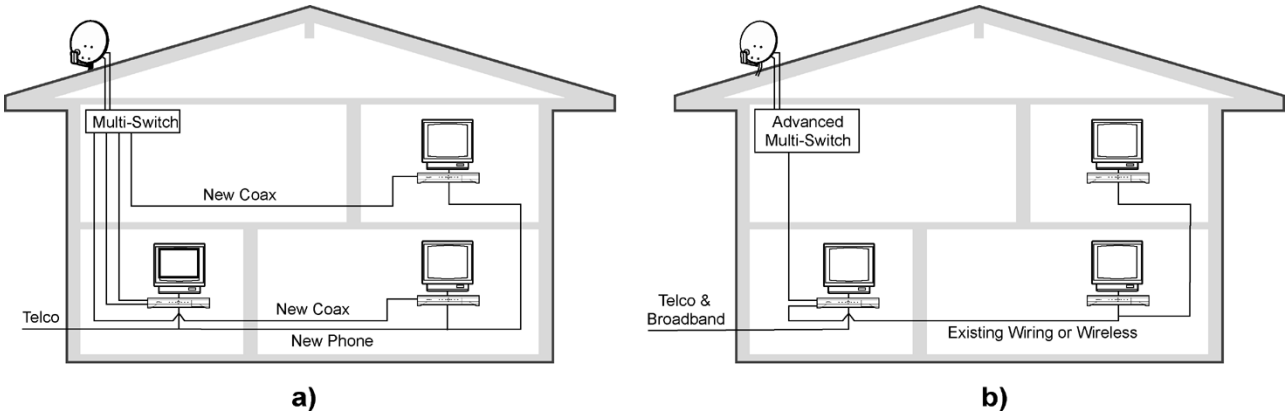

Fig. 9. (a) Traditional installations required new wiring from outdoor equipment to each TV served. (b) Home networking between DTH receivers requires new wiring only from outdoor equipment to home gateway.

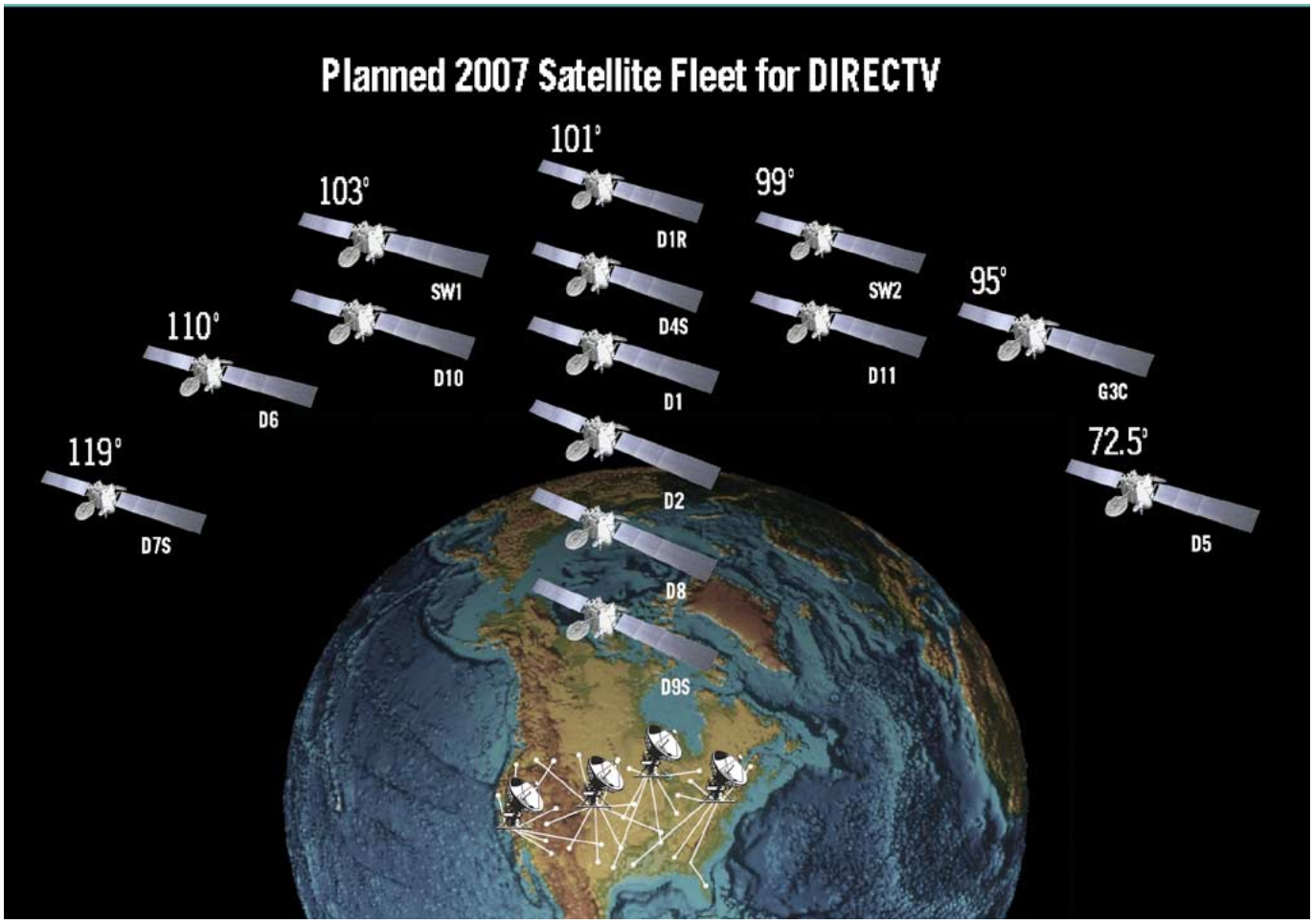

Fig. 10. Planned 2007 satellite fleet for DirecTV in United States.

for satellite-delivered HDTV became available in 2004 with a total capacity of 250 MB allowing 25-30 h of MPEG-2 encoded HD programming.

Typically, DTH programming flows *from* the customer's dish *to* one or more indoor receivers, e.g., one in the family room, one in the den, and one in the master bedroom. As illustrated in Fig. 9, home receiver networking, introduced in 2005, permits DTH programming to flow *between* receivers [16]. With home networking, a program recorded on the DVR in the family room can now be watched in either the den or bedroom, for example. Using industry standard home networking protocols as a basis, these home media networks feature automatic device discovery, QoS bandwidth management, and advanced content security.

5) Satellite Platforms: Satellite platforms continue to progress by providing substantially more bandwidth per

DISH 1018

satellite, but without proportionally greater costs for the satellite and its delivery to orbit. Fig. 3 illustrates progress in satellite platforms over a ten-year period. The platform on the right provides 16 kW end-of-life total dc power versus 4 kW for the satellite type on the left first used for DTH in 1994 [20], [31]. The newer platform also permits substantial increases in "shelf space" allowing more than twice as many active transponders [32].

The newer platforms achieve greater dc power levels by increasing the total solar panel area and by using more advanced solar cells. The triple-junction—that is, triple-layer—gallium arsenide (GaAs) solar cells of 2005 provide more than double the dc power per unit area than the single-junction silicon cells of a decade earlier [33]. Satellite platform weight has been controlled by addition of electric ion propulsion for satellite orbital position station-keeping. Ion propulsion is ten times more efficient, allowing for a reduction in propellant mass of up to 90% when compared with traditional chemical propulsion [34]. This reduction can be used to reduce launch cost, add payload functionality, and increase the satellite in-orbit lifetime.

The DTH satellites currently in planning, such as that in Fig. 3(b) have six offset parabolic antennas for downlink communications versus two such antennas in the satellites of a decade earlier [31]. Although there is little change in the basic technology of these antenna systems, the design has been customized through careful placement, near the dish focal point, of sometimes dozens of feed horns to synthesize both national beams and local spots. The spot beams permit frequency reuse between some noncontiguous local beams and hence improve overall spectrum efficiency. The spot beams are used for local channel delivery back into the originating markets [31].

6) Satellite Fleets and Backhaul Networks: The largest DTH operators in the U.S., DirecTV and Dish Network, have increased their total delivery capacity by using satellites at multiple orbit locations, with each new location providing a full "reuse" of the spectrum. The operators create high downlink power levels over their licensed spectrum and provide backup capability by deploying multiple satellites at many of their assigned orbital locations. Fig. 10 shows the planned 2007 satellite fleet for DirecTV. Fig. 10 also illustrates the extensive fiber networks used, along with satellite links (not depicted), for backhaul of local channels. As more and more local HDTV is rebroadcast by the satellite services, these networks are expected to expand significantly.

References

[1] W. L. Pritchard and M. Ogata, "Satellite direct broadcast," *Proc. IEEE,* vol. 78, no. 7, pp. 1116–1140, Jul. 1990.

[2] Satellite Broadcast and Communications Association (SBCA), Satellite Industry Key Dates [Online]. Available: www.sbca.com/key_dates.html

[3] "Annual reports of DirecTV and Dish Network," [Online]. Available: http://www.directv.com; http://www.dishnetwork.com

[4] Media Trends 2002 Monterey, CA, Kagan Research LLC.

[5] Media Trends 2003 Monterey, CA, Kagan Research LLC.

[6] Media Trends 2004 Monterey, CA, Kagan Research LLC.

[7] International Telecommunication Union (ITU), Radio Regulations 1982 ed., rev. 1985, 1986, 1988, vol. 2, appendix 30.

[8] International Telecommunication Union (ITU), Radio Regulations 1982 ed., rev. 1985, 1986, 1988, vol. 2, appendix 30A.

[9] L. J. Ippolito, Jr., *Radiowave Propagation in Satellite Communications*. New York: Van Nostrand-Reinhold, 1986.

[10] J. P. Godwin, "Direct satellite television broadcasting," in *Wiley Encyclopedia of Electrical and Electronics Engineering*, J. G. Webster, Ed. New York: Wiley, 1999, pp. 590–602.

[11] J. D. Power and Associates, "Residential cable/satellite tv customer satisfaction studies," [Online]. Available: http://www.jdpower.com

[12] Advanced Television Systems Committee, "History of the ATSC," [Online]. Available: http://www.atsc.org/history.html

[13] DirecTV Inc., "DirecTV launches new advanced TV services," Jan. 6, 2004 [Online]. Available: http://www.directv.com/DTVAPP/aboutus/Headlines.dsp

[14] *ATSC Standard: Advanced Common Applications Platform (ACAP)*, A/101, Advanced Television Systems Committee, Washington, DC, 2005 [Online]. Available: http://www.atsc.org

[15] Cable Television Laboratories, Inc., "OpenCable Application Platform (OCAP) specification," [Online]. Available: http://www.opencable.com/specifications/

[16] DirecTV, Inc., "DirecTV debuts home media center at CES trade show," Jan. 6, 2004 [Online]. Available: http://www.directv.com/DTVAPP/aboutus/Headlines.dsp

[17] KVH Industries, Inc, "Mobile satellite TV," [Online]. Available: http://www.kvh.com/tracvision_kvh/

[18] JetBlue Airways, "DirecTV inflight service," [Online]. Available: http://www.jetblue.com/havefun/directv/directv.html

[19] Society of Motion Picture and Television Engineers, SMPTE 259M Television—10-Bit 4:2:2 Component and 4fsc Composite Digital Signals—Serial Digital Interface (1997) [Online]. Available: http://www.smpte.org

[20] Boeing Company, "Satellites to deliver TV direct to home viewers," [Online]. Available: http://www.boeing.com/defense-space/space/bss/factsheets/601/dbs/dbs.html

[21] Boeing Company, "Boeing 601 fleet: High-power spacecraft for the 21st century," [Online]. Available: http://www.boeing.com/defense-space/space/bss/factsheets/601/601fleet.html

[22] DirecTV, , Application to FCC for authorization to launch and operate DBS-1 (call sign DBS8402) File No. SAT-LOA-19840112-00024.

[23] "Digital multiprogramme television systems for use by satellites operating in the 11/12 GHz frequency range," International Telecommunication Union, Recommendation ITU-R BO.1516, 2001.

[24] *Direct-to-Home Satellite Broadcast Standard*, ATSC Standard Doc. A/81, Advanced Television Systems Committee, Washington, DC, 2003 [Online]. Available: http://www.atsc.org

[25] L. Chiariglione, "The development of an integrated audiovisual coding standard: MPEG," *Proc. IEEE,* vol. 83, no. 2, pp. 151–157, Feb. 1995.

[26] G. D. Forney, Jr., *Concatenated Coding*. Cambridge, MA: MIT Press, 1966.

[27] *Information technology—Coding of audio-visual objects—Part 10: Advanced video coding*, [MPEG-4 AVC] ISO/IEC 14 496-10.

[28] *Information technology—Coding of audio-visual objects—Part 3: Audio*, [MPEG-4 AAC] ISO/IEC 14 496-3.

[29] *Draft ETSI EN 302 307 v1.1.1 (2004–06), Digital video broadcasting (DVB), second generation framing structure, channel coding and modulation systems for broadcasting, interactive services, news gathering and other broad-band satellite applications*, Standard DVB-S2 (draft) [Online]. Available: http://www.dvb.org

[30] DBS Antenna Products. California Amplifier [Online]. Available: http://www.calamp.com

[31] DirecTV, Application to FCC for authorization to launch and operate DirecTV D11 (call sign S2640) File No. SAT-LOA-20040909-00168.

[32] Boeing Company, "Boeing 702 Fleet," [Online]. Available: http://www.boeing.com/defense-space/space/bss/factsheets/702/702fleet.html

[33] Company Information. Spectrolab, Inc. [Online]. Available: http://www.spectrolab.com/com/com.htm

[34] Boeing Company, "Xenon ion propulsion," [Online]. Available: http://www.boeing.com/defense-space/space/bss/factsheets/xips/xips.html

DISH 1018

Stephen P. Dulac (Senior Member, IEEE) received the B.S. degree in electrical engineering and the M.S.E.E. degree in telecommunications engineering from the University of California, Los Angeles (UCLA), in 1985 and 1987, respectively.

Joining Hughes Aircraft Company in 1986 as a Masters Fellow, he has contributed to many company projects as it evolved into Hughes Electronics and most recently into the DirecTV Group. At subsidiary Hughes Communications from 1986–1991, his responsibilities included the first digital satellite link budget analyses applicable to the DirecTV network. At Hughes Space and Communications in 1992–1994, he was Lead Payload Engineer for the Solidaridad system of communications satellites. During 1994–1997, he held the position of Director, Conditional Access, supporting the development and launch of the DirecTV Latin America service. Since 1997, Mr. Dulac has been with DirecTV Inc., El Segundo, CA, in system engineering roles supporting U.S. service launches including HDTV, local channel rebroadcasts, DVR, interactive services, and home networking. He is currently Director, Standards and Regulatory, in DirecTV's Set-Top Box Engineering organization. He holds two patents.

Mr. Dulac led the authoring and adoption in 2000 of the CEA/EIA-805 standard for delivering data services across HD analog component interfaces.

John P. Godwin received the B.A. degree in physics from De Pauw University, Greencastle, IN, and the M.S.E. degree in aerospace engineering and the M.S.E. degree in computer, information, and control engineering from the University of Michigan, Ann Arbor.

He was a Laboratory Manager with Hughes Communications, a satellite-based communications carrier, in the 1980s and part of the DirecTV startup team formed in 1991. He contributed to system architecture and management including the satellites, broadcast centers, consumer electronics, and conditional access. He held the position of Senior Vice President (SVP), Engineering, from 1994 to 1997 during the DirecTV service launch. From 1997 to 2002 he was SVP, New Technologies, providing strategic planning and architecture enhancements. He led the workflow activities of DirecTV-Japan and provided oversight for a substantial company investment in XM Satellite Radio. From 2002 to 2004, he was Chief Technology Officer at Movielink, LLC, an online movie rental and distribution service owned by major movie studios. He is currently with Gretna Green Associates, Los Angeles, CA, a consultancy in electronic media and telecommunications. His personal research interests include exploring applications for the High Altitude Platform Service (HAPS). He holds six patents.

Mr. Godwin was one of three DirecTV managers accepting the company's Emmy Award for "Pioneering Achievement in Direct Broadcast Television." He is a member of the Space Technology Hall of Fame.

DISH 1018