US008611483B2

(12) **United States Patent**
Zhu et al.

(10) **Patent No.: US 8,611,483 B2**
(45) **Date of Patent: Dec. 17, 2013**

(54) **MULTI-LAYER TIME-INTERLEAVED ANALOG-TO-DIGITAL CONVERTOR (ADC)**

(75) Inventors: **Jianyu Zhu**, San Diego, CA (US); **Sheng-Yu Peng**, Taiwan (CN); **Rodney Chandler**, San Diego, CA (US); **Pawan Tiwari**, Irvine, CA (US); **Rahul Bhatia**, San Marcos, CA (US); **Eric Fogleman**, San Marcos, CA (US)

(73) Assignee: **MaxLinear, Inc.**, Carlsbad, CA (US)

(*) Notice: Subject to any disclaimer, the term of this patent is extended or adjusted under 35 U.S.C. 154(b) by 47 days.

(21) Appl. No.: **13/485,003**

(22) Filed: **May 31, 2012**

(65) **Prior Publication Data**

US 2012/0309337 A1 Dec. 6, 2012

Related U.S. Application Data

(60) Provisional application No. 61/493,368, filed on Jun. 3, 2011.

(51) **Int. Cl.**
H04B 1/10 (2006.01)
H04K 3/00 (2006.01)

(52) **U.S. Cl.**
USPC **375/349**; 341/122; 341/155

(58) **Field of Classification Search**
USPC 375/349; 341/122, 155, 159
See application file for complete search history.

(56) **References Cited**

U.S. PATENT DOCUMENTS

6,608,575	B2 *	8/2003	Bazarjani	341/143
7,015,842	B1	3/2006	Gupta	
7,496,342	B2	2/2009	Sorrells	
8,310,387	B2 *	11/2012	Harris et al.	341/155
2009/0045992	A1	2/2009	Tracht	
2009/0185613	A1	7/2009	Agazzi	
2009/0222226	A1	9/2009	Baraniuk	
2009/0245429	A1	10/2009	Furuta	
2010/0120386	A1	5/2010	Konstantinos	
2010/0316098	A1	12/2010	Pals	
2011/0128175	A1	6/2011	Harris	

OTHER PUBLICATIONS

PCT, International Searching Authority, International Search Report and Written Opinion, in Application No. PCT/US12/40738, dated Sep. 21, 2012.

* cited by examiner

Primary Examiner — Lee Nguyen
(74) *Attorney, Agent, or Firm* — McAndrews, Held & Malloy, Ltd.

(57) **ABSTRACT**

A radio frequency (RF) receiver may comprise a first sampling module that is operable to sample in a first level at a particular main sampling rate; a plurality of second-level sampling modules, wherein each of the plurality of second-level sampling modules is operable to sample in a second level, an output of the first level, at a second sampling rate that is reduced compared to the main sampling rate; and a plurality of third-level modules, each comprising a plurality of third-stage sampling sub-modules that are operable to sample at a third sampling rate that is reduced compared to the second sampling rate, and a plurality of corresponding analog-to-digital conversion (ADC) sub-modules.

20 Claims, 5 Drawing Sheets

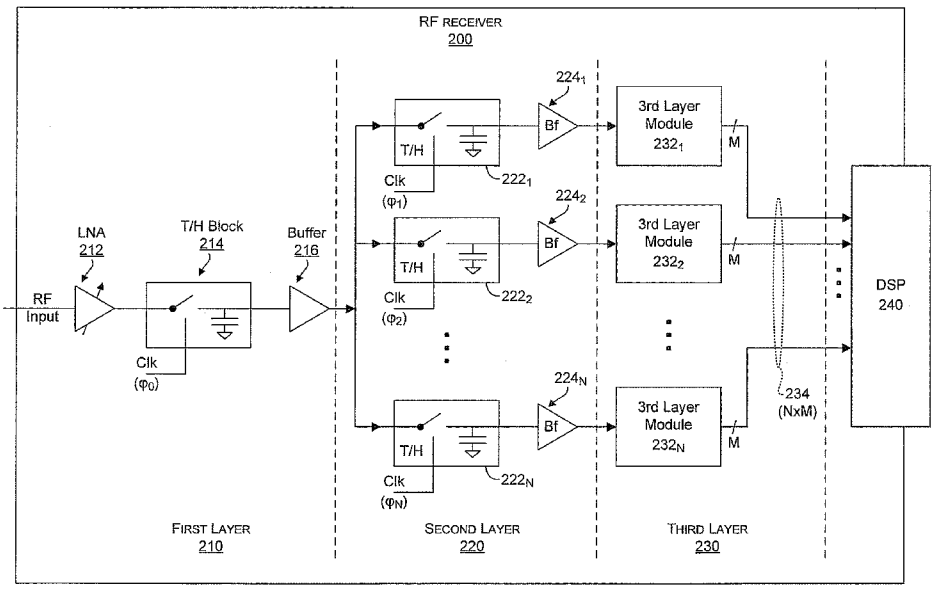

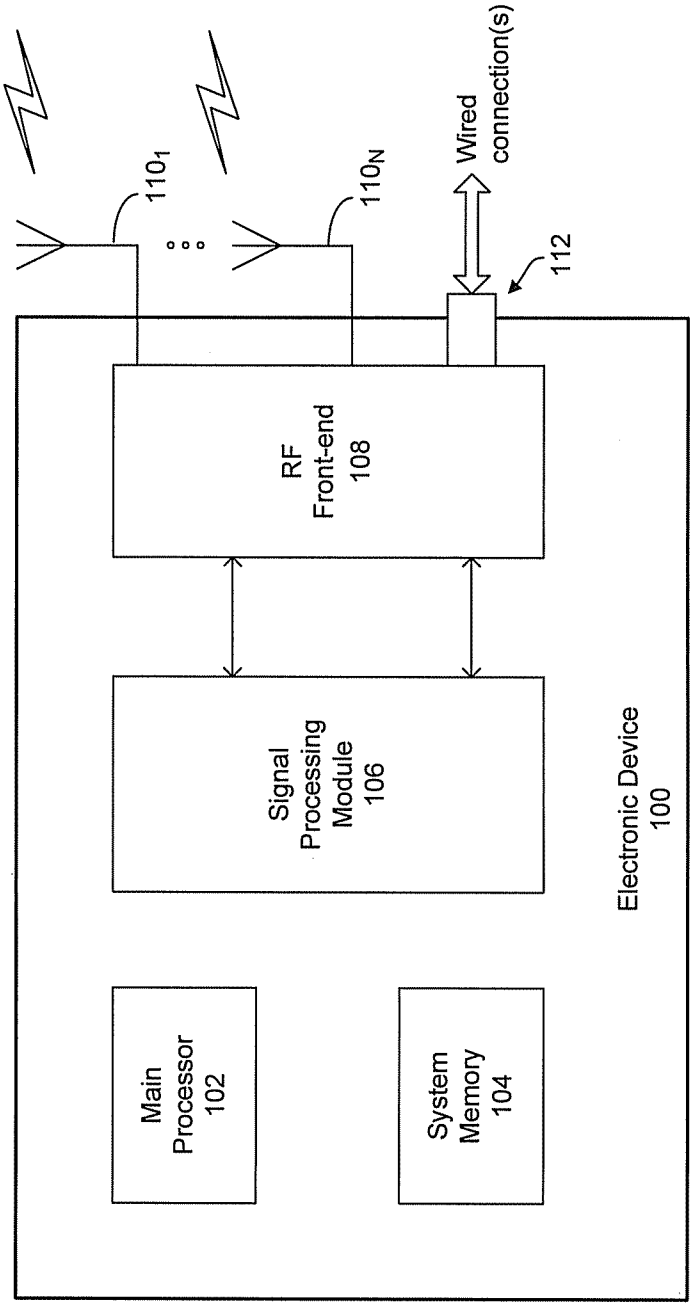
Main Processor 102
Signal Processing Module 106
RF Front-end 108
System Memory 104
Electronic Device 100
110_1
110_N
112
Wired connection(s)

FIG. 1

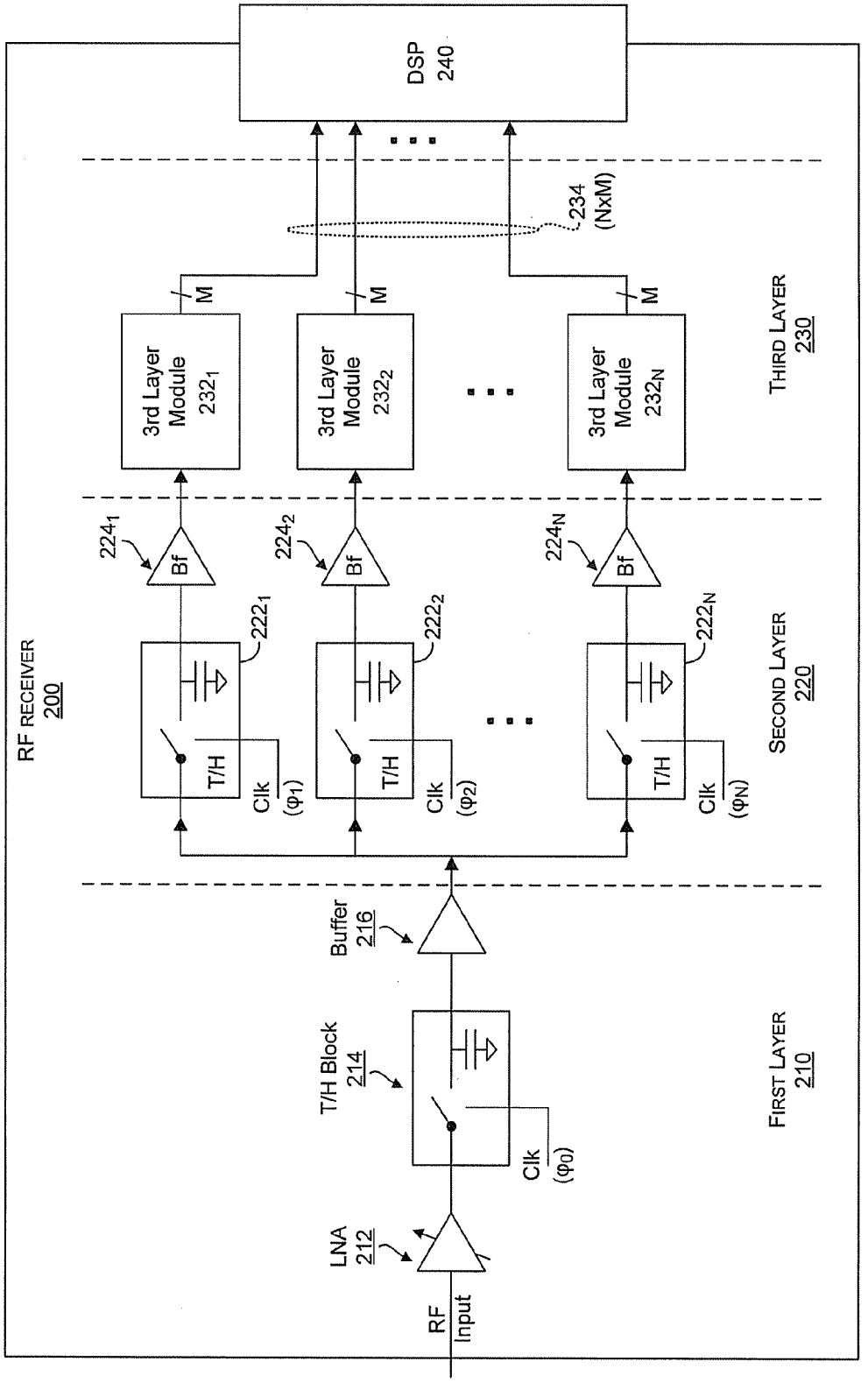
RF RECEIVER
200
DSP
240
234
(NxM)
M
3rd Layer
Module
232₁
3rd Layer
Module
232₂
3rd Layer
Module
232N
THIRD LAYER
230
224₁
224₂
224N
Bf
222₁
222₂
222N
T/H
Clk
(φ1)
(φ2)
(φN)
SECOND LAYER
220
Buffer
216
T/H Block
214
Clk
(φ0)
FIRST LAYER
210
LNA
212
RF
Input

FIG. 2

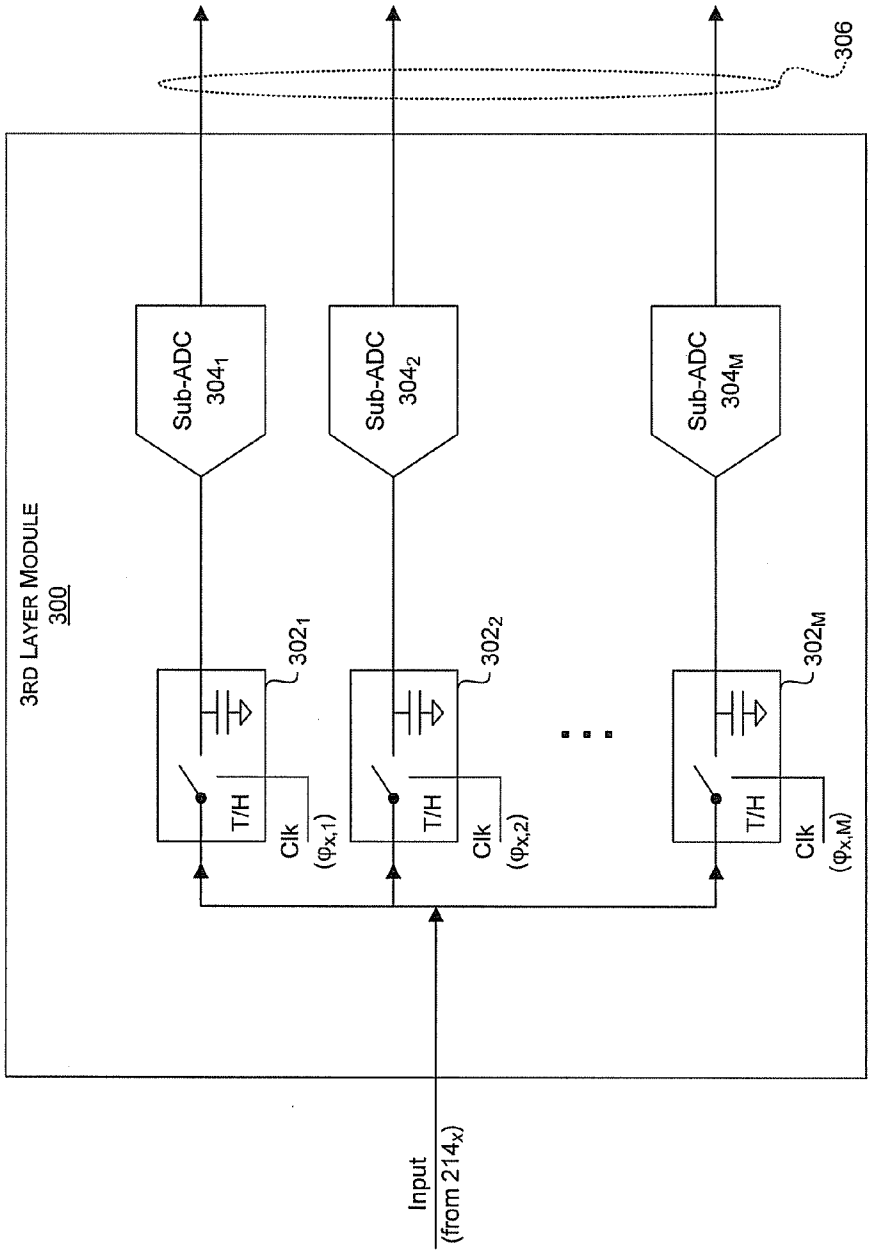
3RD LAYER MODULE
300
Sub-ADC
304₁
Sub-ADC
304₂
Sub-ADC
304M
302₁
302₂
302M
T/H
T/H
T/H
Clk
(φx,1)
Clk
(φx,2)
Clk
(φx,M)
306
Input
(from 214x)

FIG. 3

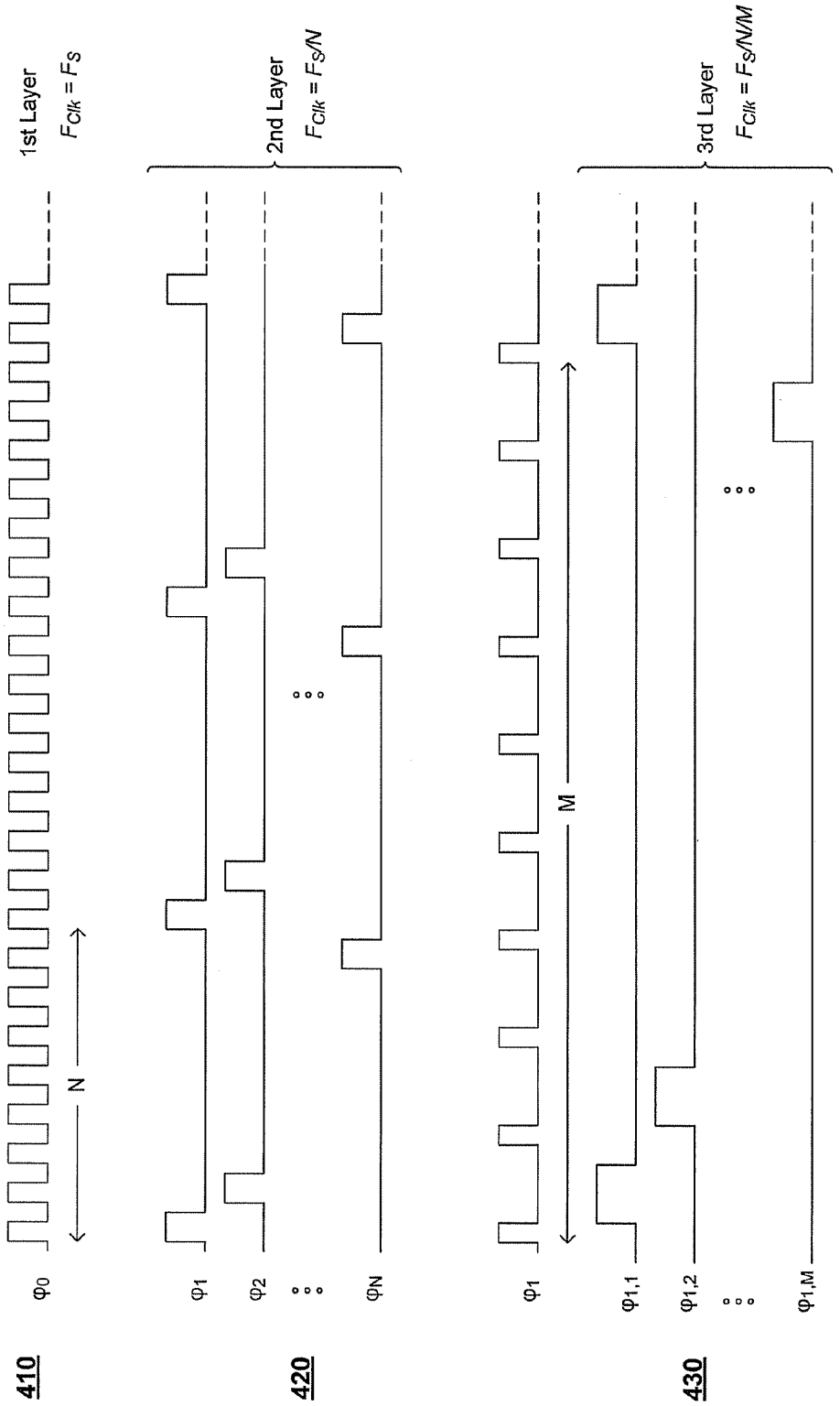
1st Layer
$F_{Clk} = F_S$
2nd Layer
$F_{Clk} = F_S/N$
3rd Layer
$F_{Clk} = F_S/N/M$
410
420
430
φ_0
φ_1
φ_2
φ_N
φ_1
$\varphi_{1,1}$
$\varphi_{1,2}$
$\varphi_{1,M}$
N
M

FIG. 4

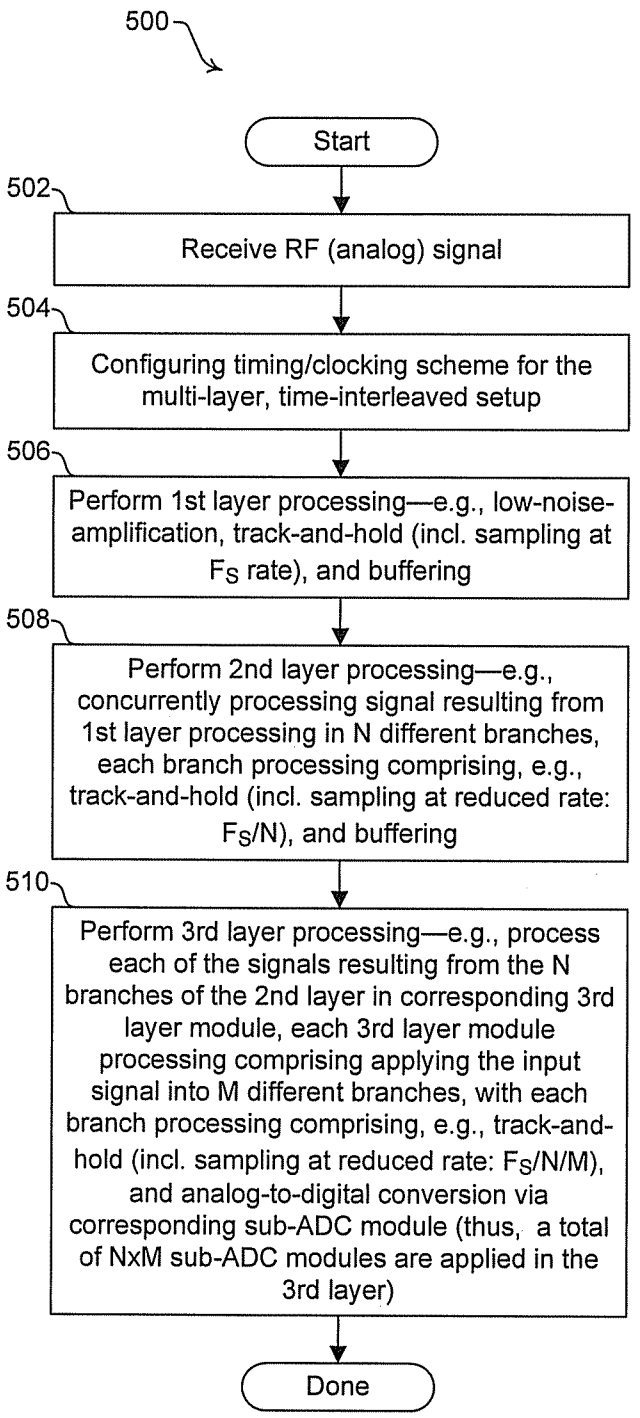
500
Start
502
Receive RF (analog) signal
504
Configuring timing/clocking scheme for the multi-layer, time-interleaved setup
506
Perform 1st layer processing—e.g., low-noise-amplification, track-and-hold (incl. sampling at F_S rate), and buffering
508
Perform 2nd layer processing—e.g., concurrently processing signal resulting from 1st layer processing in N different branches, each branch processing comprising, e.g., track-and-hold (incl. sampling at reduced rate: F_S/N), and buffering
510
Perform 3rd layer processing—e.g., process each of the signals resulting from the N branches of the 2nd layer in corresponding 3rd layer module, each 3rd layer module processing comprising applying the input signal into M different branches, with each branch processing comprising, e.g., track-and-hold (incl. sampling at reduced rate: $F_S/N/M$), and analog-to-digital conversion via corresponding sub-ADC module (thus, a total of NxM sub-ADC modules are applied in the 3rd layer)
Done

FIG. 5

MULTI-LAYER TIME-INTERLEAVED ANALOG-TO-DIGITAL CONVERTOR (ADC)

CLAIM OF PRIORITY

This patent application makes reference to, claims priority to and claims benefit from U.S. Provisional Application Ser. No. 61/493,368 filed on Jun. 3, 2011.

The above stated application is hereby incorporated herein by reference in its entirety.

INCORPORATION BY REFERENCE

This application also makes reference to:

U.S. Provisional Patent Application Ser. No. 61/610,550 filed on Mar. 14, 2012;

U.S. Provisional Patent Application Ser. No. 61/433,933 filed on Jan. 18, 2011; and

U.S. patent application Ser. No. 13/351,071 filed on Jan. 16, 2012.

Each of the above stated applications is hereby incorporated herein by reference in its entirety.

FEDERALLY SPONSORED RESEARCH OR DEVELOPMENT

[Not Applicable].

MICROFICHE/COPYRIGHT REFERENCE

[Not Applicable].

BACKGROUND OF THE INVENTION

Communications typically include transmitting or receiving analog signals over wireless and/or wired connections. The analog signals may be used to carry data (e.g., content), which may be embedded into the analog signals using analog or digital modulation schemes. In this regard, for analog communications, data is transferred using continuously varying analog signals, and for digital communications, the analog signals are used to transfer discrete messages in accordance with a particular digitalization scheme. Therefore, digital communications information requires performing, among other things, digital-to-analog conversion at the transmitting end and analog-to-digital conversion at the receiving end. Such conversions may be complex, may be time consuming, may require considerable power, and/or may introduce errors or distortion.

Further limitations and disadvantages of conventional and traditional approaches will become apparent to one of skill in the art, through comparison of such systems with some aspects of the present invention as set forth in the remainder of the present application with reference to the drawings.

BRIEF SUMMARY OF THE INVENTION

A system and/or method is provided for multi-layer time-interleaved analog-to-digital convertor (ADC), substantially as shown in and/or described in connection with at least one of the figures, as set forth more completely in the claims.

These and other advantages, aspects and novel features of the present invention, as well as details of an illustrated embodiment thereof, will be more fully understood from the following description and drawings.

BRIEF DESCRIPTION OF SEVERAL VIEWS OF THE DRAWINGS

FIG. **1** is a block diagram illustrating an exemplary electronic device, which may be used in accordance with one or more embodiments of the invention.

FIG. **2** is a block diagram illustrating an exemplary multi-layer time-interleaved analog-to-signal convertor (ADC), in accordance with a representative embodiment of the invention.

FIG. **3** is a block diagram illustrating an exemplary third layer module for use in a multi-layer time-interleaved analog-to-signal convertor (ADC), in accordance with a representative embodiment of the invention.

FIG. **4** is a timing diagram illustrating an exemplary clocking for use in multi-layer time-interleaved signal processing, such as during ADC operations, in accordance with a representative embodiment of the invention.

FIG. **5** is a flow chart that illustrates an exemplary multi-layer time-interleaved signal processing, such as ADC processing, in accordance with a representative embodiment of the invention.

DETAILED DESCRIPTION OF THE INVENTION

Certain embodiments of the invention may be found in a method and system for multi-layer time-interleaved analog-to-digital convertor (ADC). In various embodiments of the invention, an electronic device may be configured to a multi-level, time-interleaved sampling and analog-to-digital conversion (ADC) scheme during reception of radio frequency (RF) signals. This may comprise sampling in a first level, at a particular main sampling rate, an input RF signal; sampling in a second level an output of the first level, via a plurality of second-level branches, wherein each of the plurality of second-level branches may sample at a second sampling rate that may be reduced compared to the main sampling rate; and processing in a third level, each output of the plurality of second-level branches via a corresponding one of a plurality of third-level branches. In this regard, each of the plurality of third-level branches comprises a plurality of sub-branches, with each of the plurality of sub-branches being configured to sample at a third sampling rate that is reduced compared to the second sampling rate, and then apply analog-to-digital conversion (ADC).

The first level may also comprise the application of low-noise amplification to the input RF signal, such as prior to the sampling performed therein. The second sampling rate and/or the third sampling rate may be set by configuring clock signals driving the plurality of second-level branches and/or the plurality of third-level branches, based on and/or relative to, for example, a clock signal applied in the first level. In this regard, during the second level, frequency of each clock signal driving the plurality of second-level branches may be reduced relative to a frequency of the clock signal applied in the first level, based on number of the plurality of second-level branches for example. During the third level, for each one of the plurality of third-level branches, the frequency of each clock signal driving each of plurality of sub-branches of that third-level branch may be reduced relative to a frequency of a clock signal driving a corresponding one of the plurality of second-level branches, based on a number of the plurality of sub-branches for example. The output signals of the first level, the plurality of second-level branches, and/or the third-level sub-branches of the plurality of third level branches may

be held during non-read periods as determined based on an applicable sampling rate. The output signals may be held using grounding logic.

FIG. **1** is a block diagram illustrating an exemplary electronic device, which may be used in accordance with one or more embodiments of the invention. Referring to FIG. **1** there is shown an electronic device **100**.

The electronic device **100** may comprise suitable logic, circuitry, interfaces, and/or code that may be operable to implement various aspects of the invention. In this regard, the electronic device may support communication over wired and/or wireless connections. For example, the electronic device **100** may support a plurality of wired and/or wireless interfaces and/or protocols, and may be operable to perform necessary processing operations to facilitate transmission and/or reception of signals (e.g. RF signals) over supported wired and/or wireless interfaces. Exemplary electronic devices may comprise cellular/smart phones or similar handheld devices, tablets, desktop computers, laptops computers, servers, personal media players, set top boxes or broadband receivers, and/or other like devices. Exemplary wireless protocols or standards that may be supported and/or used by the electronic device **100** may comprise wireless personal area network (WPAN) protocols, such as Bluetooth (IEEE 802.15); wireless local area network (WLAN) protocols, such as WiFi (IEEE 802.11); cellular standards, such as 2G/2G+ (e.g., GSM/GPRS/EDGE) and 3G/3G+ (e.g., CDMA2000, UMTS, HSPA); 4G standards, such as WiMAX (IEEE 802.16) and LTE; Ultra-Wideband (UWB); and/or wireless TV/broadband (access) standards, such as terrestrial and/or satellite TV standards (e.g., DVB-T/T2, DVB-S/S2). Exemplary wired protocols and/or interfaces that may be supported and/or used by the electronic device **100** may comprise Ethernet (IEEE 802.3), Fiber Distributed Data Interface (FDDI), Integrated Services Digital Network (ISDN); and/or wired based TV/broadband (access) standards, such as Digital Subscriber Line (DSL), Data Over Cable Service Interface Specification (DOCSIS), Multimedia over Coax Alliance (MoCA).

The electronic device **100** may comprise, for example, a main processor **102**, a system memory **104**, a signal processing module **106**, a radio frequency (RF) front-end **108**, a plurality of antennas $\mathbf{110}_1$-$\mathbf{110}_N$, and one or more wired connectors **112**. The main processor **102** may comprise suitable logic, circuitry, interfaces, and/or code that may be operable to process data, and/or control and/or manage operations of the electronic device **100**, and/or tasks and/or applications performed therein. In this regard, the main processor **102** may be operable to configure and/or control operations of various components and/or subsystems of the electronic device **100**, by utilizing, for example, one or more control signals. The main processor **102** may enable execution of applications, programs and/or code, which may be stored in the system memory **104**, for example. The system memory **104** may comprise suitable logic, circuitry, interfaces, and/or code that may enable permanent and/or non-permanent storage, buffering, and/or fetching of data, code and/or other information, which may be used, consumed, and/or processed in the electronic device **100**. In this regard, the system memory **104** may comprise different memory technologies, including, for example, read-only memory (ROM), random access memory (RAM), Flash memory, solid-state drive (SSD), and/or field-programmable gate array (FPGA). The system memory **104** may store, for example, configuration data, which may comprise parameters and/or code, comprising software and/or firmware.

The signal processing module **106** may comprise suitable logic, circuitry, interfaces, and/or code for enabling processing of signals transmitted and/or received by the electronic device **100**. The signal processing module **106** may be operable to perform such signal processing operation as filtering, amplification, up-convert/down-convert baseband signals, analog-to-digital and/or digital-to-analog conversion, encoding/decoding, encryption/decryption, and/or modulation/demodulation.

The RF front-end **108** may comprise suitable logic, circuitry, interfaces, and/or code that may be operable to perform RF transmission and/or reception during wireless and/or wired communications, such over a plurality of supported RF bands and/or carriers. The RF front-end subsystem **108** may be operable to perform, for example, wireless communications of RF signals via the plurality of antennas $\mathbf{110}_1$-$\mathbf{110}_N$. Each of the plurality of antennas $\mathbf{110}_1$-$\mathbf{110}_N$ may comprise suitable logic, circuitry, interfaces, and/or code that may enable transmission and/or reception of RF signals within certain bandwidths and/or based on certain protocols. The RE front-end subsystem **108** may be operable to perform wired communications of RF signals via the plurality of connectors **112**. The wired connectors **112** may comprise suitable logic, circuitry, interfaces, and/or code that may enable transmission and/or reception of RF signals over wired connections, within certain bandwidths and/or based on certain protocols (e.g. MoCA).

In operation, the electronic device **100** may be operable to perform wired and/or wireless communication, in accordance with one or more interfaces and/or protocols supported thereby. In this regard, the electronic device **100** may be operable to transmit and/or receive RF signals over supported wired and/or wireless interfaces, using the RF front-end **108**, and to perform necessary signal processing operations to facilitate such transmission/reception, using the signal processing module **106**. The RF signals transmitted and/or received by the electronic device **100** may carry data pertaining to applications running in the electronic device **100**. The RF signals communicated to/from the electronic device **100** may comprise analog signals, in which the communicated data may be embedded using analog or digital modulation schemes. In this regard, during analog communications, data may be transferred used continuously varying analog signals, and during digital communications, the analog signals are used to transfer discrete messages in accordance with particular digitalization scheme. Accordingly, during performance of digital communications, the signal processing operations performed by the electronic device **100** may comprise, among other things, digital-to-analog conversion on the transmitting side and analog-to-digital conversion on the receiving side. Such conversions may be complex, may be time consuming, may require considerable power, and/or may introduce errors or distortions, especially when very wideband signals are communicated.

In various embodiments of the invention, an enhanced architecture may be utilized to improve performance during certain signal processing operations, such as with respect to sampling and analog-to-digital conversions performed during RF reception. For example, a multi-layer, time-interleaved architecture may be used during RF reception, particularly for sampling and analog-to-digital conversions performed during such RF reception. In this regard, with interleaved sampling and analog-to-digital conversion, a signal (typically very wideband) may be received and digitized by using multiple smaller sub-ADCs (analog-to-digital convertors) with sampling being done at lower frequencies, and with the sub-ADCs taking turns to sample the input signal. In

the multi-layer, time-interleaved architecture implemented in accordance with aspects of the present invention, the sampling and/or digitizing may be further enhanced by reducing or eliminating clocking/sampling mismatch errors, and/or by reducing power or resource requirements for performing the analog-to-digital conversions. For example, the sampling and analog-to-digital conversions may be performed in multiple layers (stages), thus enabling the division of the sampling and/or analog-to-digital conversions into a plurality of parallel interleaved paths, with these stages and/or parallel paths being time-interleaved—i.e., using inter-related clocking scheme. In this regard, the different layers of the multi-layer, time-interleaved architecture may be clocked using predetermined clock phases derived from, and relating to a single clock, to synchronize the various operations performed by the different layers, or components thereof.

In one representative embodiment of the invention, a single-chip may be implemented, which may provide direct RF reception function(s)—including required sampling and analog-to-digital conversions—in a singular multi-layer, time-interleaved front-end architecture. Such single-chip receiver architecture may enable integration of the entire receiving path, including the RF front-end (e.g., the RF front-end **108**), baseband and digital signal processing (i.e., at least some of the functions of the signal processing module **106**) onto a single chip, which results in enhanced performance (higher bandwidth and/or lower latency, and/or better signal integrity) and lower power consumption. This is described in more detail with respect to FIG. **2**, for example.

FIG. **2** is a block diagram illustrating an exemplary multi-layer time-interleaved analog-to-signal convertor (ADC), in accordance with a representative embodiment of the invention. Referring to FIG. **2**, there is shown a RF receiver **200**.

The RF receiver **200** may comprise suitable logic, circuitry, code, and/or interfaces operable to perform RF reception and/or processing operations related thereto. In this regard, the RF receiver **200** may incorporate a single-chip receiver architecture, in which the entire receiving path may be integrated onto a single chip which may directly provide various RF reception related function(s) comprising, e.g., receiving RF (analog) signals (e.g., via antennas or wired-based connectors), amplification, sampling and analog-to-digital conversions (if needed), and at least some of the required signal processing (e.g., baseband/passband processing and/or digital signal processing).

In a representative embodiment of the invention, the RF receiver **200** may be configured to provide sampling and analog-to-digital conversions in a singular multi-layer, time-interleaved manner. For example, the RF receiver **200** may provide analog-to-digital conversion (ADC). In this regard, when the received (analog) signals comprise digitally modulated communication, the RF receiver **200** may be operable to perform analog-to-digital conversions, to enable the generation of digital signals based on sampling of the analog signals, in which a sequence of samples—that is sequence of discrete-time information—may be determined and/or generated based on the received analog signals. The signal sampling may be achieved by reading the value of continuous input analog signals at certain, periodic intervals as determined by an applicable sampling rate for example. In an aspect of the invention, the RF receiver **200** may be implemented or configured as multi-layer, time-interleaved module. In this regard, the RF receiver **200** may be configured to perform, for example, the sampling and analog-to-digital conversion in a plurality of layers (stages), such as a first layer **210**, a second stage **220**, and a third stage **230**.

The first stage **210** may comprise a low noise amplifier (LNA) **212**, a first (1st) stage track-and-hold (T/H) block **214**, and a buffer **216**. The LNA **212** may comprise suitable logic, circuitry, code, and/or interfaces operable to amplifying weak RF signals, such as RF signals received wirelessly via antenna (s) or over wired connections, to reduce and/or prevent noise during reception of the RF signals.

The 1st stage T/H block **214** may comprise suitable logic, circuitry, code, and/or interfaces operable to directly sample a signal inputted into the T/H **214**, at a particular sampling rate. In this regard, the 1st stage T/H block **214** may be configured to sample an analog (continuous) input signal by reading it only at particular, periodic intervals, as determined based on the sampling rate for example, while blocking passage of the input signal otherwise. In this regard, the 1st stage T/H block **214** may utilize a switching logic to switch off passing of the input signal between the read points, and track and hold the output constant, such as by using ground logic, when the input signal is switched off. The operation of the 1st stage T/H block **214** may be controlled to switch off passing the input signal based on clock signal, such as by switching on passing the input signal (and sampling it) only when the clock signal is asserted. For example, when the clock signal is asserted, the input and output ports may be connected (via the switching logic), and the input signal may be tracked. On the other hand, when the clock is deasserted, the input signal may be sampled and held. In this regard, passing the input signal through the 1st stage T/H block **214** may be switched off, and the output signal may be tracked and held at a particular, predetermined value—e.g., by using the ground logic to set the output of the 1st stage T/H block **214** to logic '0'.

The buffer **216** may comprise suitable logic, circuitry, code, and/or interfaces operable to buffer and transfer signals from a component/circuit coupled to its input port to component(s)/circuit(s) coupled to its output port. The use of the buffer **214** may also allow blocking undesired effects (e.g., loading), to the input connected components, by the output connected components. The buffer **216** may be a unity-gain buffer—that is having no gain, and such signals transferred buffer **216** are transferred unchanged.

The second stage **220** may comprise a plurality of branches (e.g., N branches, with 'N' being a non-zero natural number). Each branch may comprise a second (2nd) stage track-and-hold (T/H) block $\mathbf{222}_x$ and a 2nd stage buffer $\mathbf{224}_x$ (with x taking values between 1 and N). Each 2nd stage T/H block $\mathbf{222}_x$ may be substantially similar to the 1st stage T/H block **214**; and each 2nd stage buffer $\mathbf{224}_x$ may be substantially similar to the buffer **216**. The clock signals used for each of the 2nd stage T/H blocks $\mathbf{222}_1$-$\mathbf{222}_N$ may be, however, different. In this regard, the clock signals of the 2nd stage T/H blocks $\mathbf{222}_1$-$\mathbf{222}_N$ may be configured in accordance with a particular clock shifting scheme that ensures proper function of the multi-layer, time-interleaved operation of the RF receiver **200**. This is described in more detail below.

The third stage **230** may comprise a plurality of third (3rd) layer modules $\mathbf{232}_1$-$\mathbf{232}_N$. In this regard, each of the branches of the second stage **220** may be coupled (e.g., via corresponding 2nd stage buffer $\mathbf{224}_x$) to a corresponding one of the 3rd layer modules $\mathbf{232}_1$-$\mathbf{232}_N$. Each 3rd layer module $\mathbf{232}_x$ may comprise suitable logic, circuitry, code, and/or interfaces operable to perform sampling and analog-to-digital conversion. In an embodiment of the invention, each of the 3rd layer modules $\mathbf{232}_1$-$\mathbf{232}_N$ may comprise a plurality of sub-ADC (analog-to-digital convertor) modules, for enabling setting up and using, in parallel for example, multiple sampling and digitization paths. For example, each 3rd layer module $\mathbf{232}_x$ may comprise M sub-ADCs, with M being a non-zero natural

number). Accordingly, the RF receiver **200** may comprise N×M sub-ADC modules (and thus N×M distinct and parallel sampling/digitizing paths).

The RF receiver **200** may also incorporate at least a portion of a digital signal processing (DSP) **240**, to support the single-chip receiver architecture. In this regard, the DSP block **240** may comprise suitable logic, circuitry, code, and/or interfaces operable to perform computationally intensive processing of data during communication operations. The DSP block **240** may be operable to, for example, encode, decode, modulate, demodulate, encrypt, decrypt, scramble, descramble, and/or otherwise process data that may be carried in transmitted or received signals. The DSP block **240** may be configured to select, apply, and/or adjust a modulation scheme, error coding scheme, and/or data rates based on type and/or characteristics of interface being used in communicating the signals (carrying the data).

In operation, the RF receiver **200** may be configured to utilize a multi-layer, interleaved scheme for performing sampling and analog-to-digital conversion (ADC) during reception of RF signals. For example, after a RF signal is received (e.g., via antennas $\mathbf{110}_1$-$\mathbf{110}_N$ or wired connection **112**), the RF signal may be processed via a first layer **210**, a second layer **220**, and a third layer **230**. Furthermore, in some implementations (e.g., when the RF receiver **200** is implemented as full RF path on single chip), the RF receiver **200** may also be operable to perform at least some digital processing subsequent to the completion of sampling and ADC processing. In this regard, during the first layer **210**, after the RF input signal is first received, and gained up by the LNA **212**, the output of the LNA **212** may then be directly sampled via the 1st stage T/H block **214**, which may be configured to apply a particular sampling rate (e.g., F_S). The sampled signal may then be buffered, using buffer **216** (which may be, e.g., a unity-gain buffer), which may be used to control passing of the output of the first layer **210** onto the next layer—that is the second layer **220**.

Processing during the second layer **220** may comprise sampling via the 2nd stage T/H blocks $\mathbf{222}_1$-$\mathbf{222}_N$. In this regard, the 2nd stage T/H blocks $\mathbf{222}_1$-$\mathbf{222}_N$ may take turns in resampling the signal buffered via the buffer **216**. In this regard, in accordance with the multi-layer, time interleaved implementation, each of the 2nd stage T/H blocks $\mathbf{222}_1$-$\mathbf{222}_N$ may be configured to sample at a reduced rate. The 2nd stage T/H blocks $\mathbf{222}_1$-$\mathbf{222}_N$ may be configured to sample at the rate F_S/N. In this regard, the sampling rate applied in the second layer **220** may be selected and/or configured such that the number of samples generated via the 2nd stage T/H blocks $\mathbf{222}_1$-$\mathbf{222}_N$ during any time interval may match the number of samples obtained via the first layer **210**—e.g., for each cycle of sampling via the second layer **220** (through all N 2nd stage T/H blocks $\mathbf{222}_x$), there would be N samples read via the 1st stage T/H block **214**. Furthermore, each of the 2nd stage T/H blocks $\mathbf{222}_1$-$\mathbf{222}_N$ may be configured to hold their outputs at a particular predetermined value (e.g., logic '0' using a grounding logic) in between sampling reads. The output of each 2nd stage T/H block $\mathbf{222}_x$ may be buffered, again, via corresponding 2nd stage buffer $\mathbf{224}_x$, which may be used to control passing of the outputs (N) of the second layer **220** onto the next layer—that is the third layer **230**.

Processing during the third layer **230** may comprise performing a third stage sampling followed by analog-to-digital sampling via each of the 3rd layer modules $\mathbf{232}_1$-$\mathbf{232}_N$. In this regard, each of the 3rd layer modules $\mathbf{232}_1$-$\mathbf{232}_N$ may further incorporate use of plurality of branches (e.g., M), each of which is operable to perform sampling (via T/H block) and analog-to-digital conversion via a sub-ADC module. This shown in more detail in FIG. **3**. Accordingly, at the end of the third layer **230**, a total of N×M digital codes may be obtained from all the time-interleaved sub-ADC modules, which (the digital outputs) may then be recombined into a total digital output that may be run at the full sampling rate F_S. The total digital output may be finally filtered and/or decoded by the DSP block **240**, to extract desired signals (or data carried thereby).

FIG. **3** is a block diagram illustrating an exemplary third layer module for use in a multi-layer time-interleaved analog-to-signal convertor (ADC), in accordance with a representative embodiment of the invention. Referring to FIG. **3**, there is as shown a 3rd layer module **300**, which may correspond to each of the 3rd layer modules $\mathbf{232}_1$-$\mathbf{232}_N$ of FIG. **2**, for example.

The 3rd layer module **300** may comprise a plurality of branches (e.g., M branches, with 'M' being a non-zero natural number). Each branch may comprise a third (3rd) stage track-and-hold (T/H) block $\mathbf{302}_y$ and a sub-ADC module $\mathbf{304}_y$ (with 'y' taking values between 1 and M). Each 3rd stage T/H block $\mathbf{302}_y$ may be substantially similar to the 1st stage T/H block **214** of FIG. **2**, for example. The clock signals used for each of the 3rd stage T/H blocks $\mathbf{302}_1$-$\mathbf{302}_M$ may be, however, different. In this regard, the clock signals of the 3rd stage T/H blocks $\mathbf{302}_1$-$\mathbf{302}_M$ may be configured in accordance with clock shifting scheme implemented in the RF receiver **200**, whereby each of the 1st stage T/H block **214**, the 2nd stage T/H blocks $\mathbf{222}_1$-$\mathbf{222}_N$, and the 3rd stage T/H blocks $\mathbf{302}_1$-$\mathbf{302}_M$ may have assigned unique clock signal, based on corresponding particular clock shift.

Each sub-ADC module $\mathbf{304}_y$ may comprise suitable logic, circuitry, code, and/or interfaces operable to analog samples (as received from corresponding 3rd stage T/H block $\mathbf{302}_y$) to corresponding digital codes. The sub-ADC module $\mathbf{304}_y$ may perform the conversion in accordance with a particular rate, which may be determined and/or configured based on a clocking scheme implemented in the RF receiver **200**.

In operation, the 3rd layer module **300** may be used during multi-layer, time-interleaved sampling and ADC scheme during RF reception, such as via the RF receiver **200**. For example, a plurality of 3rd layer modules **300** may be used during third layer **230** processing (e.g., corresponding to the 3rd layer modules $\mathbf{232}_1$-$\mathbf{232}_N$). In this regard, the 3rd stage T/H blocks $\mathbf{302}_1$-$\mathbf{302}_M$ of the 3rd layer modules $\mathbf{232}_1$-$\mathbf{232}_N$ (i.e., N×M 3rd stage T/H blocks) may take turns in resampling outputs of the 2nd stage branches, which may be buffered in 2nd stage buffers $\mathbf{224}_1$-$\mathbf{224}_N$, at further reduced rate (e.g., $F_S/N/M$). In this regard, the sampling rate applied in the third layer **230** may be selected and/or configured such that the number of samples generated of via the 3rd stage T/H blocks (e.g., all N×M of them) during any time interval may match the number of samples obtained via each of the first layer **210** and the second layer **220** within the time interval—e.g., during a time interval corresponding to a full cycle of all the 3rd stage T/H blocks (e.g., all N×M of them), there might be M samples read via each of the N second layer branches (for a total of N×M samples), and N×M samples read via the 1st stage T/H block **214**. As with the other T/H blocks, each of the 3rd stage T/H blocks $\mathbf{302}_y$ may be configured to hold their outputs at a particular predetermined value (e.g., logic '0' using a grounding logic) in between sampling reads. The sampled output of each 3rd stage T/H block $\mathbf{302}_y$ may be passed onto corresponding sub-ADC module $\mathbf{304}_y$, which may convert the analog samples to digital codes. Each 3rd stage T/H block $\mathbf{302}_y$ may have roughly $(N-1)/F_S$ time to fully

settle to the desired input signal. Each sub-ADC module 304_y may have roughly (NM−N−1}/F_S time to process the analog sample.

The use of direct sampling of RF signals from the LNA may remove the need for using particular components, such as mixers and tunable frequency synthesizers, which may otherwise be required thus saving power and area and simplifying system design. A front-end architecture, in accordance with aspects of the present invention, may allow time-interleaving a large number of sub-ADC modules which may run at relatively low speed and low power to form a very high-speed ADC that is capable of running at high (>GHz) sample rate and suitable for RF sampling. Compared with architectures that time-interleave multiple T/H stages at the front, the described architecture may allow employing a single T/H stage initially, which may enable avoiding errors arising from sample time mismatches and bandwidth mismatches between the time interleaved T/H stages. Compared with architectures that time-interleave a large number of sub-ADC modules in one flat layer, the described architecture, in accordance with aspects of the present invention, may employ a multi-layer time-interleaving structure that reduces the number of T/H stages or sub-ADC modules in each layer that the unity-gain buffer needs to drive, hence relaxing the otherwise-very-stringent design requirements (e.g. speed and power) for the buffer. The multi-layer time-interleaving structure may also increase the available settling time for the T/H stages in the third layer, hence relaxing the design requirement for the T/H circuits, because the second layer T/H already samples the input at a much lower rate (e.g., F_S/N), so each T/H stage in the third layer may receive a signal that only changes at the rate of F_S/N.

FIG. **4** is a timing diagram illustrating an exemplary clocking for use in multi-layer time-interleaved signal processing, such as during ADC operations, in accordance with a representative embodiment of the invention. Referring to FIG. **4**, there are shown timing diagrams **410**, **420**, and **430**, corresponding to clock signal timing and/or shifting for three different layers in a multi-layer, time-interleaved sampling and analog-to-digital conversion (ADC) operation.

The timing diagram **410** shows clock timing for a first layer, such as for the first layer **210** of the RF receiver **200**. In this regard, the clock signal applicable to, for example, the 1st stage T/H block **214** of the first layer **210** (i.e., clock signal $Clk_{\phi 0}$) may be configured to have an assertion rate F_{Clk} (i.e., frequency of asserting the clock signal) which may be equal to the sampling rate F_S. In other words, the clocking signal of the 1st stage T/H block **214** of the first layer **210** may be configured such that the 1st stage T/H block **214** may sample the input signal at exactly the sampling rate F_S.

The timing diagram **420** shows clock timing for a second layer, such as for the second layer **220** of the RF receiver **200**. In this regard, the clock signals for each of the N branches of the second layer **220** (i.e., clock signal $Clk_{\phi 1}$-$Clk_{\phi N}$) may be set at reduced assertion rate F_{Clk}, which may be set to F_S/N for example, and with each clock signal being shifted such that the corresponding component (i.e., 2nd stage T/H block **222**) would be the only block switched on and (re)sampling at any given point. In other words, the clocking signals for the second layer **220** of the RF receiver **200** are configured such that within every N-samples sequence performed by the 1st stage T/H block **214** of the first layer **210**, each of the N 2nd stage T/H block 222_x of the second layer **220** would perform a single resampling of the input signal.

The timing diagram **430** shows clock timing for a third layer, such as for the third layer **230** of the RF receiver **200**. In this regard, the clock signals for each of the 3rd layer modules (e.g., 232_1-232_N) may be set up based on the corresponding branch of the second layer **220**—e.g., synchronized to assertions of the clock of the corresponding 2nd layer branch, and be configured to allow resampling the input signal through all of the branches of the 3rd layer module between two successive assertions of the of the clock of the corresponding 2nd layer branch. For example, timing diagram **430** shows the clocking timing for the 3rd layer module 232_1, which may be coupled (via corresponding 2nd stage buffer 224_1) to 2nd stage T/H block 222_1. In this regard, the clock signals for each of the M branches of the 3rd layer module 232_1 (i.e., clock signal $Clk_{\phi 1,1}$-$Clk_{\phi 1,M}$) may be set at further reduced assertion rate F_{Clk}, which may be set to F_S/N/M for example, and with each clock signal being shifted such that the corresponding component (i.e., 3rd stage T/H block 302_y) would be the only block switched on and (re)sampling at any given point. In other words, the clocking signals for the 3rd layer module 232_1 may be configured such that within every M-samples sequence performed by the corresponding 2nd stage T/H block 222_1 of the second layer **220**, each of the M 3rd stage T/H blocks 302_y of the 3rd layer module 232_1 would perform a single resampling of the input signal.

Accordingly, the clocking of the RF receiver **200** may be configured such that for each N×M consecutive samples performed by the 1st stage T/H block **214** of the first layer **210**, each of the N 2nd stage T/H blocks 222_x of the third layer **230** would (re)sample the input signal only M times, and each of the N×M 3rd stage T/H blocks $302_{x,y}$ of the third layer **230** would only resample once.

FIG. **5** is a flow chart that illustrates an exemplary multi-layer time-interleaved signal processing, such as ADC processing, in accordance with an embodiment of the invention. Referring to FIG. **5**, there is shown a flow chart **500** comprising a plurality of exemplary steps for multi-layer time-interleaved analog-to-digital conversion, such as in RF receiver **200** for example.

In step **502**, a RF (analog) signal may be received. In step **504**, a timing/clocking scheme for applying multi-layer, time-interleaved sampling and analog-to-digital conversion (ADC) may be configured. In this regard, configuring the clocking scheme may comprise generating based on a clocking signal of a first stage of sampling, clocking signals for subsequent stages of sampling applicable to the input signal, substantially as described with respect to FIGS. **2**-**4**, for example. In step **506**, first stage processing may be performed. This may comprise performing, at the received (input) RF signal, low-noise-amplification, sampling at FS rate (and tracking-and-holding output between sampling reads), and buffering the sampling (or tracked/held) output before transferring the output to the next (second) stage.

In step **508**, second stage processing may be performed. This may comprise concurrently processing signal resulting from first stage processing via a plurality (e.g., N) different branches. In this regard, each second-stage branch processing may comprise, for example, sampling, at a reduced rate (e.g., at F_S/N), of output of the first stage processing (and tracking-and-holding output between sampling reads), and buffering the sampled (or tracked/held) output(s) before transferring the output(s) to the next (third) stage.

In step **510**, third stage processing may be performed. This may comprise processing each of the signals resulting from the multiple branches (e.g., N) of the second stage in a corresponding third stage branch (e.g., one of 3rd layer modules 232_1-232_N of the RF receiver **200**). In this regard, processing through each third stage branch may comprise applying interleaving of the third stage branch input into multiple different sub-branches (e.g., M), with each sub-branch processing

comprising, for example, sampling, at a reduced rate (e.g., at $F_S/N/M$), of a corresponding second stage processing branch (and tracking-and-holding output between sampling reads), followed by analog-to-digital conversion (ADC) via a corresponding sub-ADC module. In other words, by the end of the third stage of processing, a total of N×M sub-ADC modules are applied after 3 interleaved stages of sampling.

Various embodiments of the invention may comprise a method and system for multi-layer time-interleaved analog-to-digital convertor (ADC). [Claims w/ref-numbers].

Other embodiments of the invention may provide a non-transitory computer readable medium and/or storage medium, and/or a non-transitory machine readable medium and/or storage medium, having stored thereon, a machine code and/or a computer program having at least one code section executable by a machine and/or a computer, thereby causing the machine and/or computer to perform the steps as described herein for improving linearity of an amplifier by means of IM3 cancelation.

Accordingly, the present invention may be realized in hardware, software, or a combination of hardware and software. The present invention may be realized in a centralized fashion in at least one computer system, or in a distributed fashion where different elements are spread across several interconnected computer systems. Any kind of computer system or other system adapted for carrying out the methods described herein is suited. A typical combination of hardware and software may be a general-purpose computer system with a computer program that, when being loaded and executed, controls the computer system such that it carries out the methods described herein.

The present invention may also be embedded in a computer program product, which comprises all the features enabling the implementation of the methods described herein, and which when loaded in a computer system is able to carry out these methods. Computer program in the present context means any expression, in any language, code or notation, of a set of instructions intended to cause a system having an information processing capability to perform a particular function either directly or after either or both of the following: a) conversion to another language, code or notation; b) reproduction in a different material form.

While the present invention has been described with reference to certain embodiments, it will be understood by those skilled in the art that various changes may be made and equivalents may be substituted without departing from the scope of the present invention. In addition, many modifications may be made to adapt a particular situation or material to the teachings of the present invention without departing from its scope. Therefore, it is intended that the present invention not be limited to the particular embodiment disclosed, but that the present invention will include all embodiments falling within the scope of the appended claims.

What is claimed is:

1. A method, comprising:

in an electronic device:

sampling in a first level, at a particular main sampling rate, an input RF signal;

sampling in a second level an output of said first level, via a plurality of second-level branches, wherein each of said plurality of second-level branches samples at a second sampling rate that is reduced compared to said main sampling rate; and

processing in a third level, each output of said plurality of second-level branches via a corresponding one of a plurality of third-level branches, wherein each of said plurality of third-level branches comprises a plurality of sub-branches, and each of said plurality of sub-branches:

samples at a third sampling rate that is reduced compared to said second sampling rate; and

applies analog-to-digital conversion (ADC).

2. The method according to claim **1**, comprising applying low-noise amplification to said input RF signal in said first level.

3. The method according to claim **1**, comprising setting said second sampling rate and/or said third sampling rate by configuring clock signals driving said plurality of second-level branches and/or said plurality of third-level branches based on and/or relative to a clock signal applied in said first level.

4. The method according to claim **3**, comprising reducing, based on number of said plurality of second-level branches, a frequency of each clock signal driving said plurality of second-level branches relative to a frequency of said clock signal applied in said first level.

5. The method according to claim **4**, comprising, for each one of said plurality of third-level branches, reducing a frequency of each clock signal driving each of plurality of sub-branches of said one of said plurality of third-level branches, relative to a frequency of a clock signal driving a corresponding one of said plurality of second-level branches, based on a number of said plurality of sub-branches.

6. The method according to claim **1**, comprising holding output signals of each of said first level, said plurality of second-level branches, and said third-level sub-branches of said plurality of third-level branches, during non-read periods as determined based on an applicable sampling rate.

7. The method according to claim **6**, comprising holding said output signals using grounding logic.

8. A system, comprising:

one or more circuits for use in an electronic device, the one or more circuits being operable to:

sample in a first level, at a particular main sampling rate, an input RF signal;

sample in a second level an output of said first level, via a plurality of second-level branches, wherein each of said plurality of second-level branches samples at a second sampling rate that is reduced compared to said main sampling rate; and

processing in a third level, each output of said plurality of second-level branches via a corresponding one of a plurality of third-level branches, wherein each of said plurality of third-level branches comprises a plurality of sub-branches, and each sub-branch:

samples at a third sampling rate that is reduced compared to said second sampling rate; and

applies analog-to-digital conversion (ADC).

9. The system according to claim **8**, wherein said one or more circuits are operable to apply low-noise amplification to said input RF signal in said first level.

10. The system according to claim **8**, wherein said one or more circuits are operable to set said second sampling rate and/or said third sampling rate by configuring clock signals driving said plurality of second-level branches and/or said plurality of third-level branches based on and/or relative to a clock signal applied in said first level.

11. The system according to claim **10**, wherein said one or more circuits are operable to reduce, based on number of said plurality of second-level branches, a frequency of each clock signal driving said plurality of second-level branches relative to a frequency of said clock signal applied in said first level.

12. The system according to claim 11, wherein said one or more circuits are operable to reduce, for each one of said plurality of third-level branches, frequency of each clock signal driving each of a plurality of sub-branches of said one of said plurality of third-level branches, relative to a frequency of a clock signal driving a corresponding one of said plurality of second-level branches, based on a number of said plurality of sub-branches.

13. The system according to claim 8, wherein said one or more circuits are operable to hold output signals of each of said first level, said plurality of second-level branches, and all third-level sub-branches during non-read periods as determined based on an applicable sampling rate.

14. The system according to claim 13, wherein said one or more circuits are operable to hold said output signals based on grounding logic.

15. A system, comprising:

a radio frequency (RF) receiver implemented on a single chip, the RF receiver comprising:

a first sampling module that is operable to sample in a first level, an input RF signal, at a particular main sampling rate;

a plurality of second-level sampling modules, wherein each of said plurality of second-level sampling modules is operable to sample in a second level, an output of said first level, at a second sampling rate that is reduced compared to said main sampling rate;

a plurality of third-level sampling modules, wherein:

each of said plurality of third-level sampling modules is operable to samples in a third level, at a third sampling rate that is reduced compared to said second sampling rate; and

said plurality of third-level sampling modules is configured into a plurality of sub-sets, each of said plurality of sub-sets corresponding to one of said plurality of second-level sampling modules; and

a plurality of third-level analog-to-digital conversion (ADC) modules, wherein each of said ADC modulates is associated with a particular one of said plurality of third-level sampling modules.

16. The system according to claim 15, wherein said RF receiver comprises a low-noise amplifier for amplifying said input RF signal in said first level.

17. The system according to claim 15, wherein said RF receiver comprises a buffer for buffering an output of said first level and/or a plurality of second-level buffers, wherein each of said plurality of second-level buffers is operable to buffer an output of a corresponding one of said plurality of second-level sampling modules.

18. The system according to claim 15, wherein said RF receiver is operable to set said second sampling rate and/or said third sampling rate by configuring clock signals driving said plurality of second-level sampling modules and/or said plurality of third-level sampling modules, relative to a clock signal driving said first sampling module.

19. The system according to claim 18, wherein said RF receiver is operable to:

reduce, relative to a frequency of said clock signal driving said first sampling module, a frequency of each of clock signals driving said plurality of second-level sampling modules, based on a number of said plurality of second-level sampling modules; and

reduce, for each one of said plurality of third-level sampling modules, a frequency of a clock signal driving said one of said plurality of third-level sampling modules, relative to frequency of a clock signal driving one of said plurality of second-level branches associated with one of said plurality of sub-sets comprising said one of said plurality of third-level sampling modules, based on said one of said plurality of sub-sets.

20. The system according to claim 15, wherein said RF receiver is operable to perform at least some of digital processing of outputs of said plurality of third-level ADC modules, said digital processing comprising filtering and decoding to extract desired signals or data.

* * * * *