US009026118B2

(12) **United States Patent**
Ling

(10) **Patent No.: US 9,026,118 B2**
(45) **Date of Patent: May 5, 2015**

(54) **MULTI-STANDARD COVERAGE MAP GENERATION**

(75) Inventor: **Curtis Ling**, Carlsbad, CA (US)

(73) Assignee: **MaxLinear, Inc.**, Carlsbad, CA (US)

(*) Notice: Subject to any disclaimer, the term of this patent is extended or adjusted under 35 U.S.C. 154(b) by 446 days.

(21) Appl. No.: **13/588,769**

(22) Filed: **Aug. 17, 2012**

(65) **Prior Publication Data**

US 2014/0051347 A1 Feb. 20, 2014

(51) **Int. Cl.**
H04W 40/00 (2009.01)
H04W 72/04 (2009.01)

(52) **U.S. Cl.**
CPC ***H04W 72/044*** (2013.01)

(58) **Field of Classification Search**
CPC H04W 88/04; H04W 72/04; H04W 84/06; H04W 84/12; H04W 24/00; H04W 16/00; H04W 16/20; H04W 24/08; H04W 24/02; H04W 88/06; H04W 16/14; H04W 76/025; H04W 88/10; H04B 7/18508; H04B 17/009; G01S 19/23; G01S 5/0242; G08B 21/0277; H04L 1/0003; H04L 1/1893; H04L 2025/03414; H04L 25/03343; H04H 20/72
USPC 455/3.02, 7, 9, 11.1, 12.1, 427, 422.1, 455/430, 446; 370/328, 329, 316, 252
See application file for complete search history.

(56) **References Cited**

U.S. PATENT DOCUMENTS

8,392,783 B2 * 3/2013 Kang et al. 714/748
2002/0154055 A1 10/2002 Davis et al.
2006/0262222 A1 11/2006 Monnier et al.
2008/0060024 A1 3/2008 Decanne
2009/0007189 A1 1/2009 Gutknecht et al.
2009/0113492 A1 4/2009 Norin et al.
2010/0272038 A1 * 10/2010 Hamalainen et al. 370/329
2013/0148571 A1 * 6/2013 Miller 370/316
2014/0269491 A1 * 9/2014 Edge 370/328

FOREIGN PATENT DOCUMENTS

EP 1494353 A3 1/2006
WO 2009143082 A1 11/2009
WO 2011033342 A1 3/2011

OTHER PUBLICATIONS

European Search Report for EP 12003194 dated Aug. 24, 2012.

* cited by examiner

Primary Examiner — Sujatha Sharma
(74) *Attorney, Agent, or Firm* — McAndrews, Held & Malloy, Ltd.

(57) **ABSTRACT**

A satellite reception assembly may receive signals on a block of frequencies that encompasses channels of one or more wireless networks. The satellite reception assembly may convey information about signals received on the block of frequencies to a centralized location which may utilize the information to determine characteristics, such as coverage area and/or usage, of the wireless network(s). Additionally or alternatively, such information from a plurality of satellite reception assemblies may be aggregated and made available to third parties which may use the aggregate information, in combination with knowledge about the wireless network(s), to determine characteristics of the wireless network(s).

20 Claims, 11 Drawing Sheets

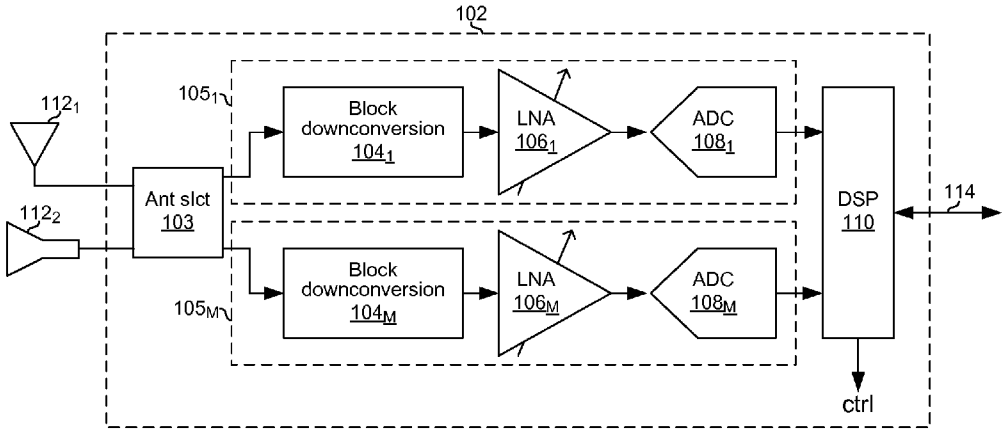

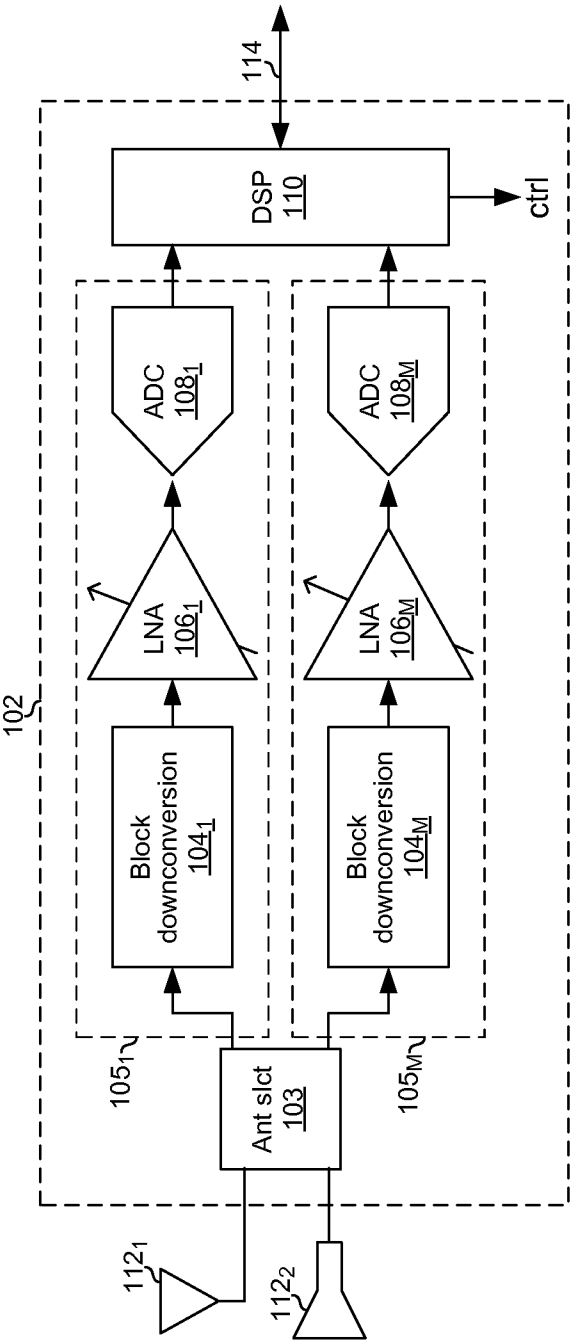
114
DSP
110
ctrl
ADC
108₁
ADC
108M
LNA
106₁
LNA
106M
102
Block
downconversion
104₁
Block
downconversion
104M
105₁
105M
Ant slct
103
112₁
112₂

FIG. 1

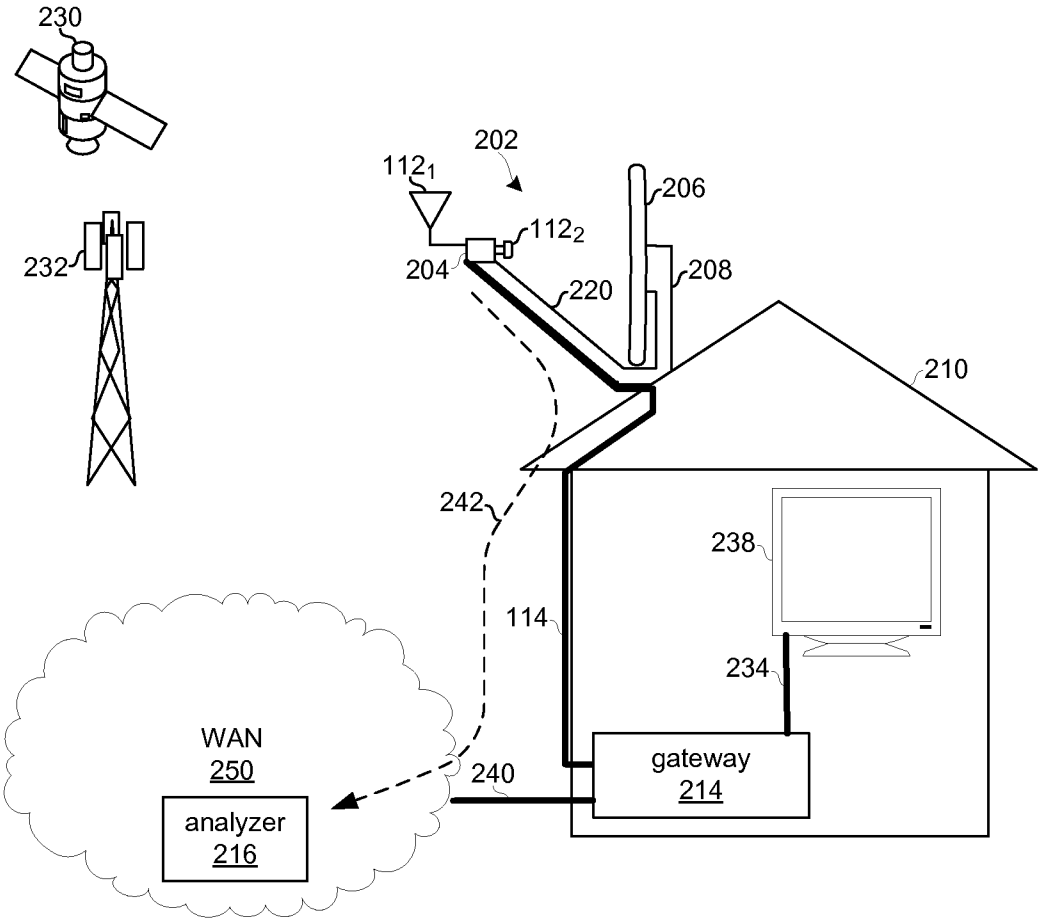
230
232
202
112_1
112_2
204
206
208
220
210
242
238
114
234
WAN
250
analyzer
216
240
gateway
214

FIG. 2

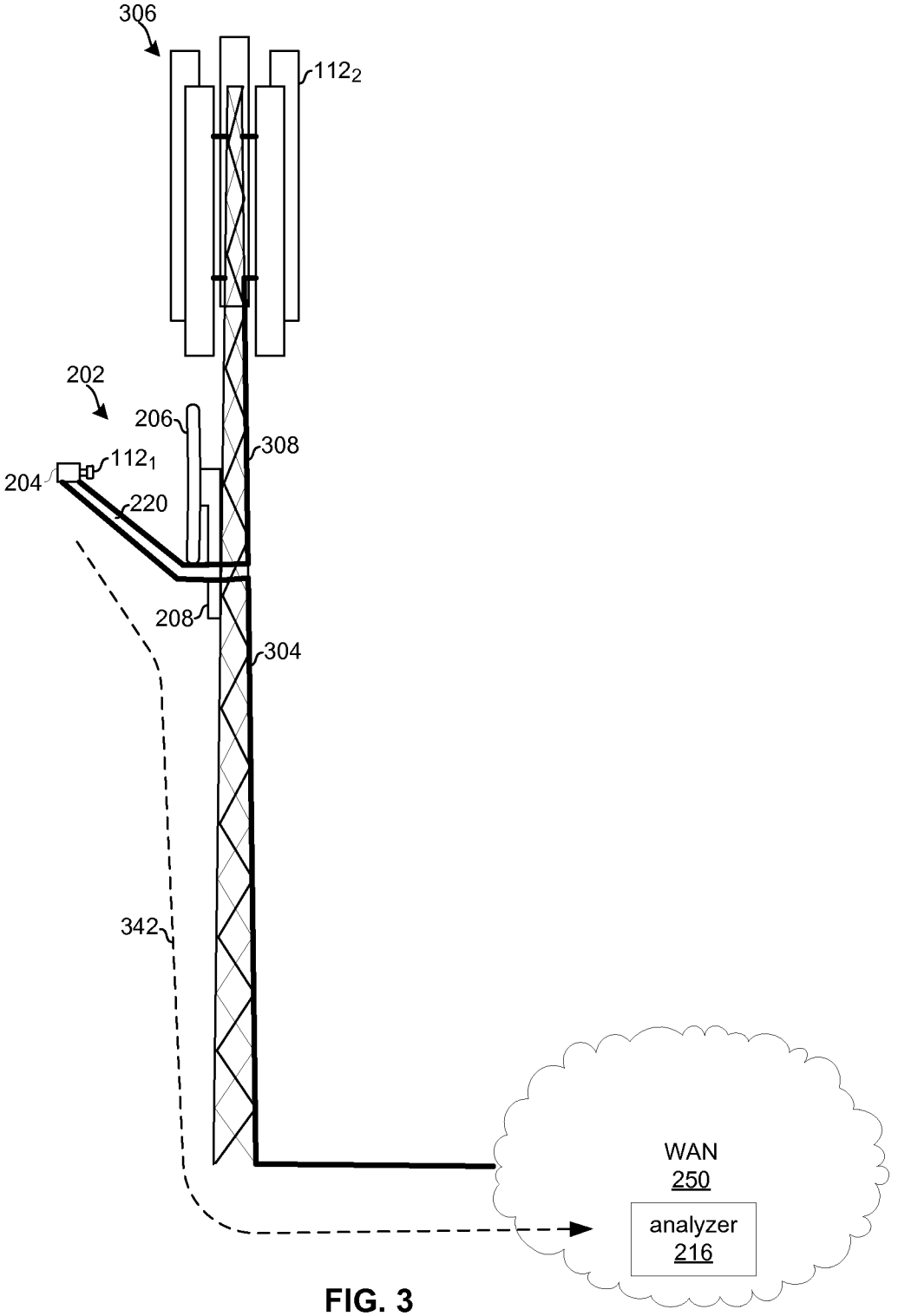
306
112₂
202
206
308
112₁
204
220
208
304
342
WAN
250
analyzer
216

FIG. 3

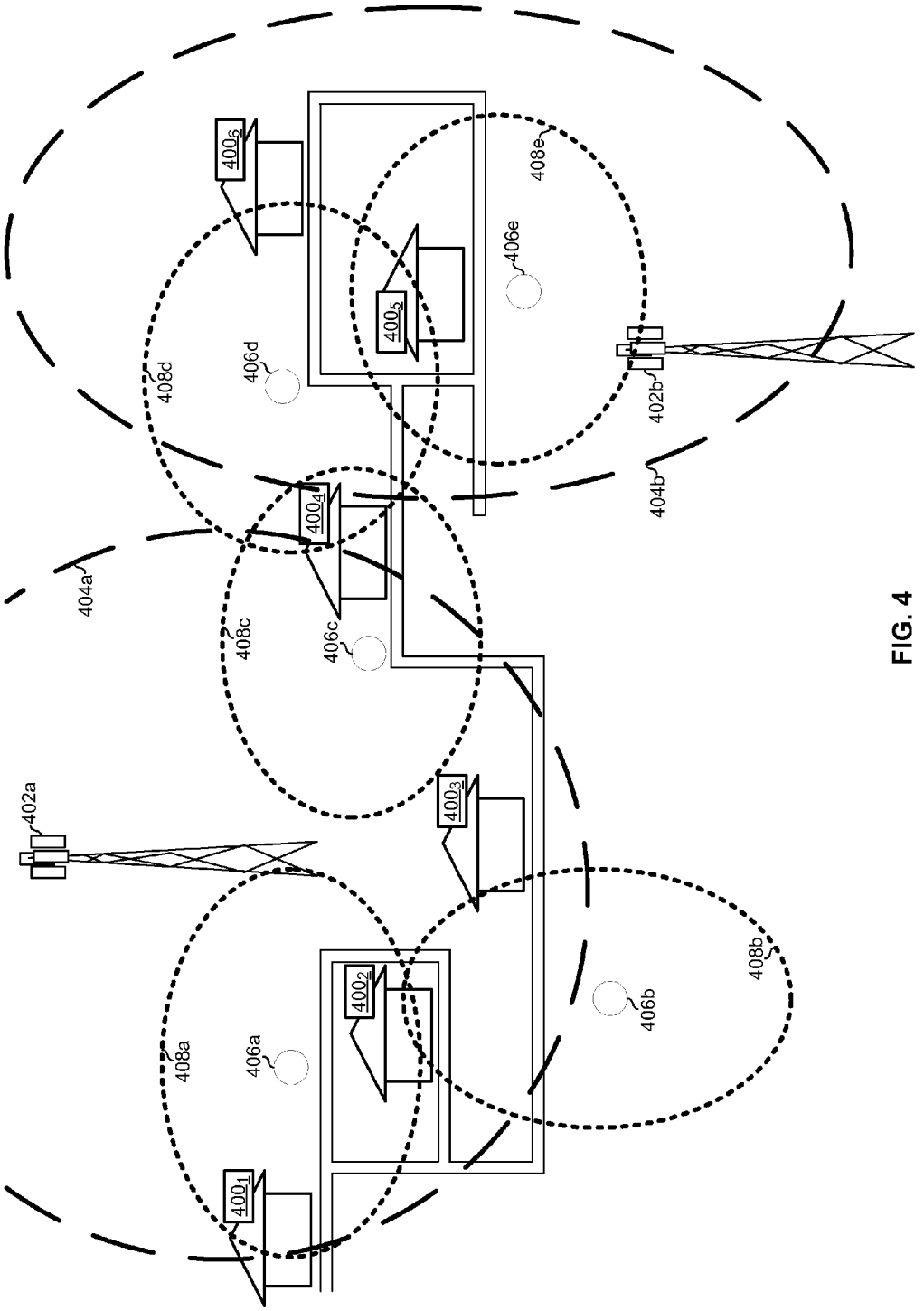
402a
402b
404a
404b
400$_1$
400$_2$
400$_3$
400$_4$
400$_5$
400$_6$
406a
406b
406c
406d
406e
408a
408b
408c
408d
408e

FIG. 4

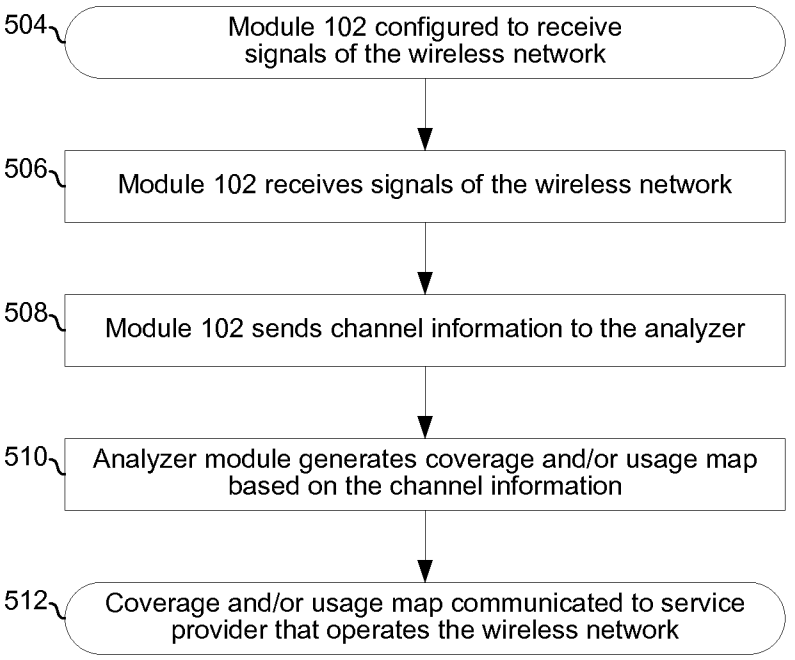
504
Module 102 configured to receive signals of the wireless network
506
Module 102 receives signals of the wireless network
508
Module 102 sends channel information to the analyzer
510
Analyzer module generates coverage and/or usage map based on the channel information
512
Coverage and/or usage map communicated to service provider that operates the wireless network

FIG. 5

Location	Channel	Characteristic(s)
Loc_1	Ch_1	XXX
⋮		
Loc_1	Ch_M	XXX
Loc_2	Ch_1	XXX
⋮		
Loc_2	Ch_M	XXX
⋮		
Loc_N	Ch_M	XXX

FIG. 6A

Location	Channel	Characteristic(s)				
		T0	T1	T2	•••	TZ
Loc_1	Ch_1	x	x	x		x
⋮						
Loc_1	Ch_M	x	x	x	•••	x
Loc_2	Ch_1	x	x	x		x
⋮						
Loc_2	Ch_M	x	x	x	•••	x
⋮						
Loc_N	Ch_M	x	x	x	•••	x

FIG. 6B

Location	Base Station IDs	Base Station characteristic(s)	Client IDs	Client characteristic(s)
Loc_1	X, X, X, ...	X, X, X, ...	X, X, X, ...	X, X, X, ...
Loc_2	X, X, X, ...	X, X, X, ...	X, X, X, ...	X, X, X, ...
⋮				
Loc_N	X, X, X, ...	X, X, X, ...	X, X, X, ...	X, X, X, ...

FIG. 6C

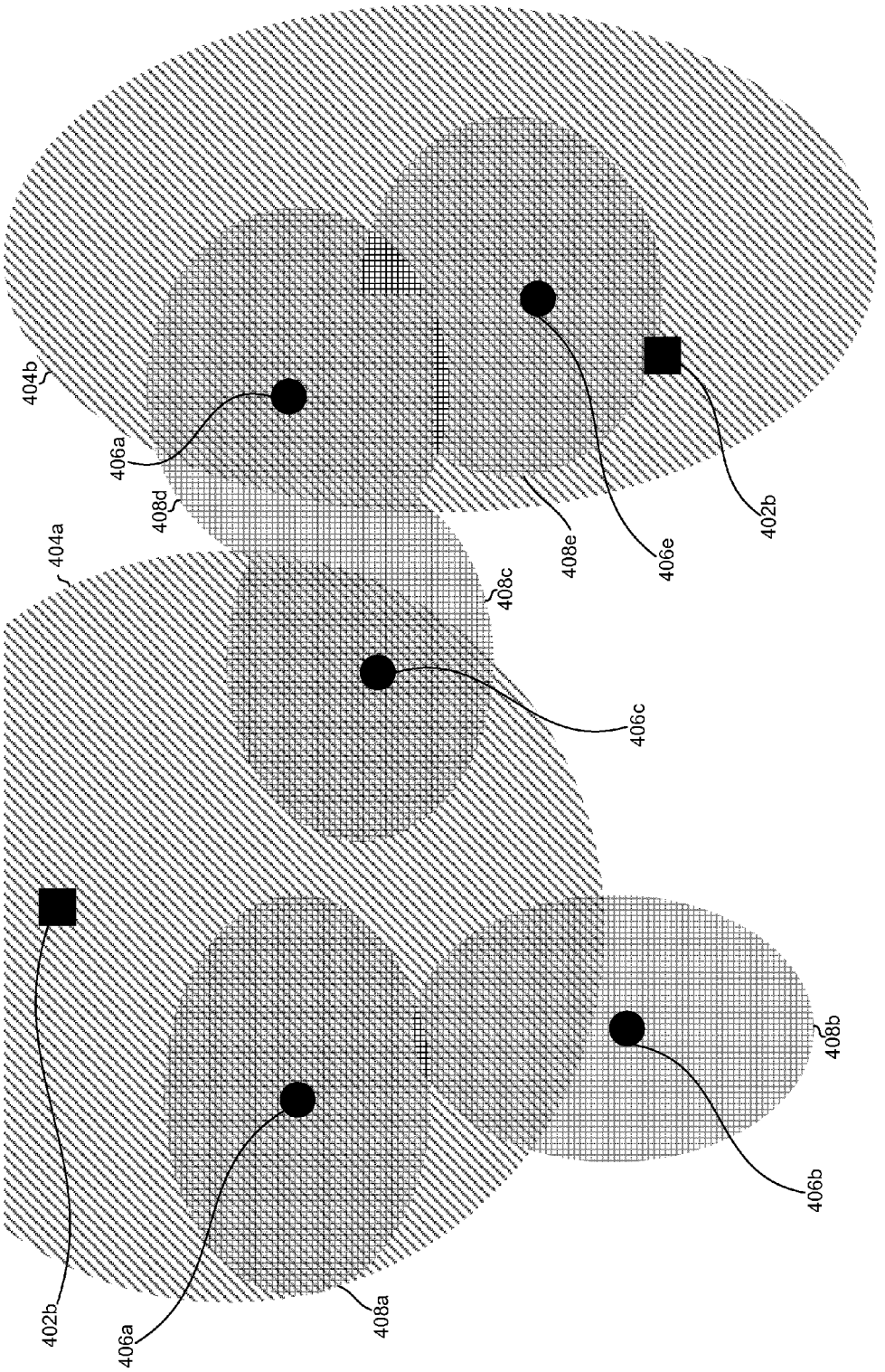
404b
406a
408d
404a
408e
406e
402b
408c
406c
402b
406a
408a
408b
406b

FIG. 7A

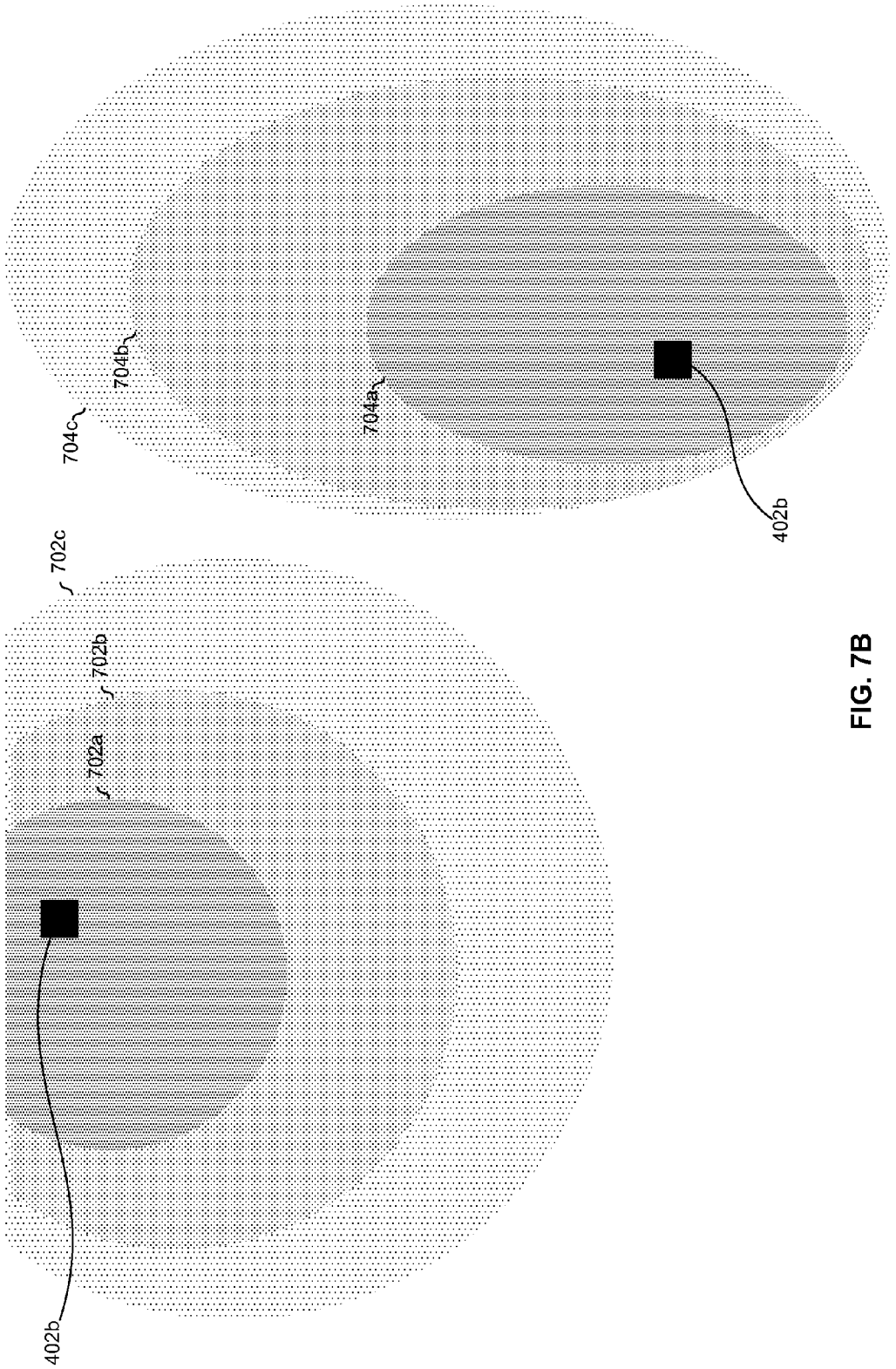

FIG. 7B

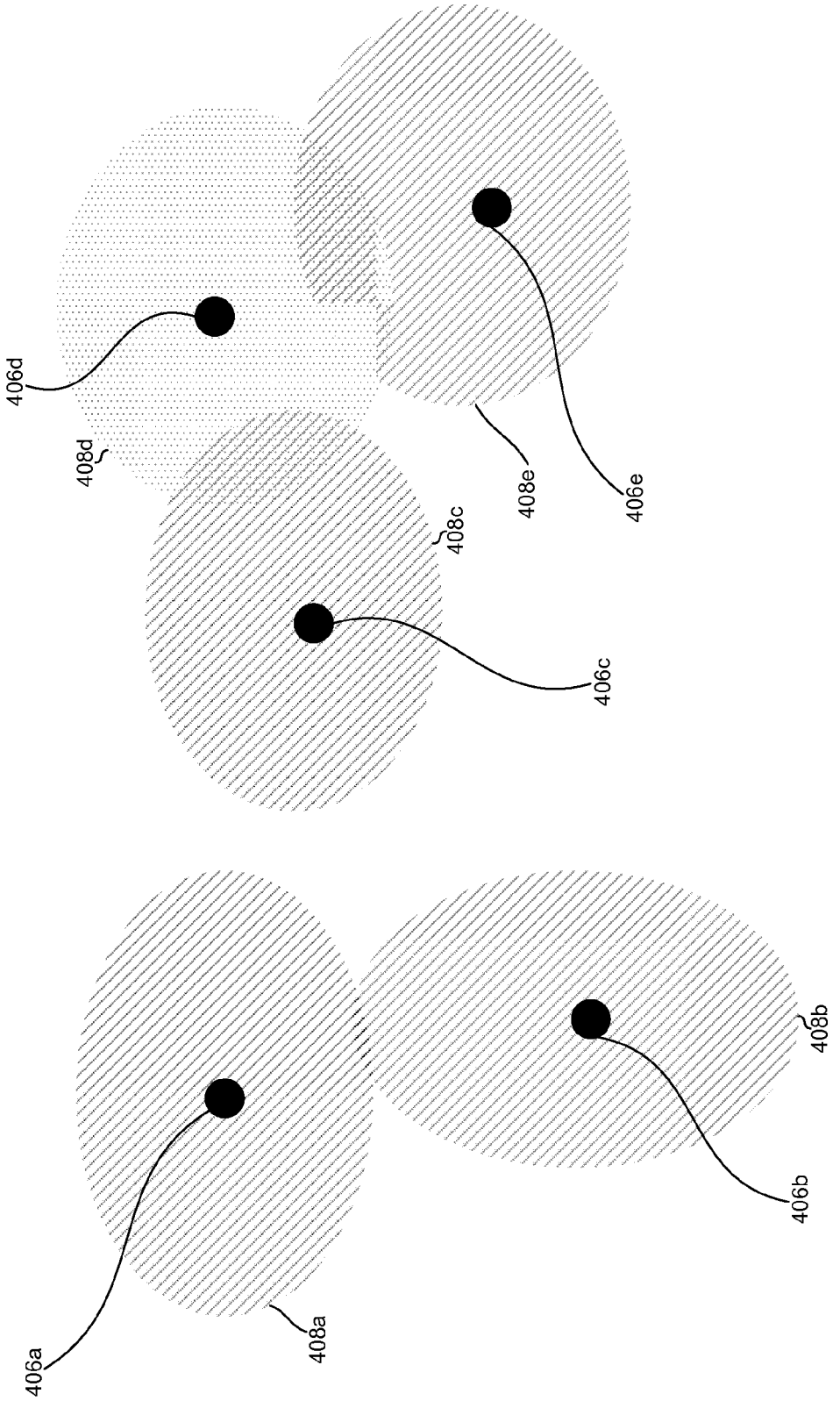

FIG. 7C

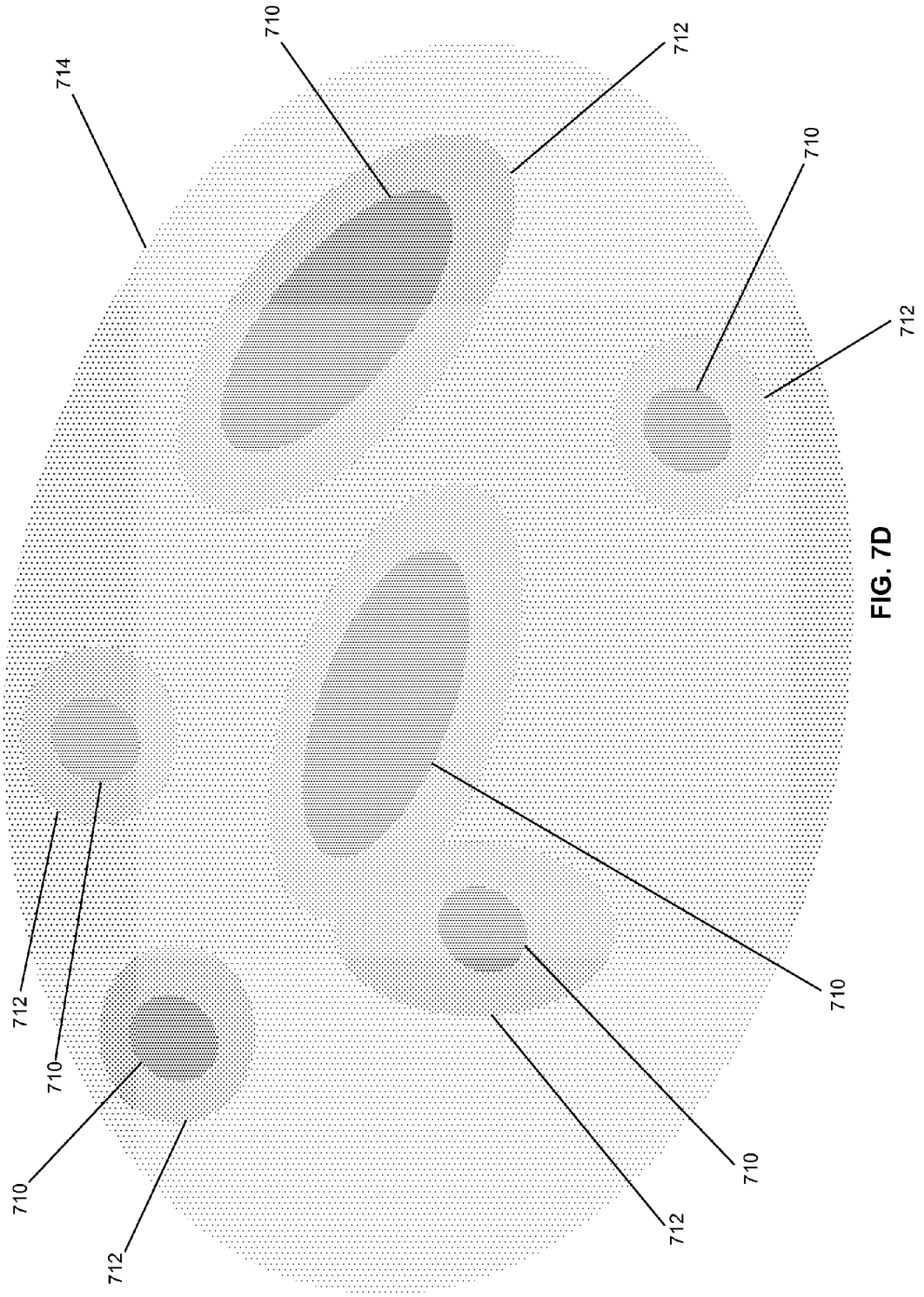

FIG. 7D

MULTI-STANDARD COVERAGE MAP GENERATION

INCORPORATION BY REFERENCE

This patent application makes reference to:

U.S. patent application Ser. No. 13/485,003 entitled "Multi-Layer Time-Interleaved Analog-to-Digital Convertor (ADC)" and filed on May 31, 2012;

U.S. patent application Ser. No. 13/336,451 entitled "Method and Apparatus for Broadband Data Conversion" and filed on Dec. 23, 2011;

U.S. patent application Ser. No. 13/326,125 entitled "System and Method in a Broadband Receiver for Efficiently Receiving and Processing Signals" and filed on Dec. 14, 2011; and

U.S. Provisional Patent Application Ser. No. 61/532,098 entitled "Method and Apparatus for Spectrum Monitoring" and filed on Sep. 8, 2011.

Each of the above applications is hereby incorporated herein by reference in its entirety.

TECHNICAL FIELD

Aspects of the present application relate to wireless communications. More specifically, to a method and system for Multi-Standard Coverage Map Generation.

BACKGROUND

Existing methods and systems for determining wireless network coverage and/or usage can be inefficient and/or costly. Further limitations and disadvantages of conventional and traditional approaches will become apparent to one of skill in the art, through comparison of such approaches with some aspects of the present method and apparatus set forth in the remainder of this disclosure with reference to the drawings.

BRIEF SUMMARY

A method and/or system is provided for multi-standard coverage map generation via a network of satellite receivers, substantially as illustrated by and/or described in connection with at least one of the figures, as set forth more completely in the claims.

BRIEF DESCRIPTION OF THE DRAWINGS

FIG. **1** depicts an example module which may be used in generating coverage and/or usage maps for wireless networks.

FIG. **2** depicts an example implementation where the system of FIG. **1** is mounted on customer premises.

FIG. **3** depicts an example implementation where the system of FIG. **1** is mounted to a cellular tower.

FIG. **4** is a diagram illustrating characterization of a plurality of wireless network using deployed satellite reception assemblies.

FIG. **5** is a flowchart illustrating an example process for determining network characteristics based on information collected via one or more satellite reception assemblies.

FIGS. **6**A-**6**C illustrate example data structures which may be populated based on data collected by one or more satellite reception assemblies.

FIGS. **7**A-**7**D illustrate examples of coverage maps which may be generated based on data collected by one or more satellite reception assemblies.

DETAILED DESCRIPTION

As utilized herein the terms "circuits" and "circuitry" refer to physical electronic components (i.e. hardware) and any software and/or firmware ("code") which may configure the hardware, be executed by the hardware, and or otherwise be associated with the hardware. As utilized herein, "and/or" means any one or more of the items in the list joined by "and/or". As an example, "x and/or y" means any element of the three-element set {(x), (y), (x, y)}. As another example, "x, y, and/or z" means any element of the seven-element set {(x), (y), (z), (x, y), (x, z), (y, z), (x, y, z)}. As utilized herein, the term "module" refers to functions than can be performed by one or more circuits. As utilized herein, the term "exemplary" means serving as a non-limiting example, instance, or illustration. As utilized herein, the term "e.g.," introduces a list of one or more non-limiting examples, instances, or illustrations.

FIG. **1** depicts an example module which may be used in generating coverage and/or usage maps for wireless networks. The module **102** comprises a digital signal processing module **110**, low-noise block-downconversion modules $\mathbf{104}_1$-$\mathbf{104}_M$, low-noise amplifiers $\mathbf{106}_1$-$\mathbf{106}_M$, analog-to-digital converters $\mathbf{108}_1$-$\mathbf{108}_M$, where M is an integer. The module **102** may be realized on one or more integrated circuit (e.g., silicon die) and/or one or more printed circuits boards and may reside in one or more housings. Implementations of the module **102** may be referred to as, for example, a "next generation LNB." In implementations where the signal **114** output by the module **102** utilizes Internet Protocol, the module may be referred to as an "IP-LNB."

Each downconversion module $\mathbf{104}_m$ (m being an integer between 1 and M) may be operable to downconvert a block of frequencies from a higher frequency band to a lower-frequency band. In an example implementation, each module $\mathbf{104}_m$ may downconvert an approximately 1 GHz-wide block of frequencies from the K and/or Ka band to the L band. Which block of frequencies is downconverted and to what frequency the block is downconverted may be determined by the frequency of one or more oscillators (not shown) of the module **102**, the frequencies of which may be dynamically configurable (e.g., via one or more control signals output by the DSP module **110**) during operation of the module **102** (i.e., which the module **102** is receiving and processing signals of one or more wireless networks).

The antenna select module **103** may control which of one or more antennas **112** are coupled to which of the signal processing paths

Each LNA $\mathbf{106}_m$ may be operable to apply a gain to the signal output by module $\mathbf{104}_m$ to generate the analog signal input to ADC $\mathbf{108}_m$. The gain may be variable and may be dynamically controlled during operation of the module **102** (e.g., based on feedback from the DSP module **110**).

Each ADC $\mathbf{108}_m$ may be operable to digitize the signal from LNA $\mathbf{106}_m$ to generate a corresponding digital signal output to the DSP module **110**. In an example implementation, each ADC **108***m* may have sufficient bandwidth to concurrently digitize the entire downconverted block of frequencies. Each ADC **108***m* may, for example, comprise an ADC as disclosed in U.S. patent application Ser. No. 13/485,003 and/or as disclosed in U.S. patent application Ser. No. 13/336,451, each of which in incorporated herein by reference above.

The DSP module **110** may be operable to process the signals received from the ADCs $\mathbf{108}_1$-$\mathbf{108}_M$ to select and output one or more of a plurality of frequency division multiplexed, time division multiplexed, and/or code division multiplexed channels present in the digitized blocks of frequen-

cies output by the ADCs 108_1-108_M. The channels may correspond to any number and/or type of wireless technologies. For example, a first one of the channels may be a satellite broadcast channel, a second one of the channels may be a cellular channel, a third one of the channels may be a Wi-Fi channel, a fourth one of the channels may be a WiMAX channel, and a fifth one of the channels may be a WiGig channel.

The module **102** may be dynamically configured during operation to allocate and reallocate the paths 105_1-105_M among blocks of frequencies over time.

An example implementation is described in the next two paragraphs.

During time interval T**1**, one or more clients of the module **102** (e.g., a television or set-top-box/gateway) may desire one or more satellite television channel. Accordingly, during time interval T**1**, the antenna 112_2 (e.g., a feed horn and parabolic reflector) may receive a ~1 GHz block of frequencies in the K band, and convey that block of frequencies to module 104_1 which may convert the block of frequencies to L band. The LNA 106_1 may then amplify the ~1 GHz-wide L-band signal, the ADC 108_1 may digitize the ~1 GHz-wide L-band signal, and the DSP module **110** may process the digitized signal to select the desired satellite television channel(s) for output on the connection **114**. During an immediately subsequent interval, time interval T**2**, it may be desired to characterize coverage and/or usage of a wireless network. Accordingly, the module **102** may be configured to receive one or more frequency blocks encompassing one or more channels of the wireless network and convey information about the channel(s) to an analyzer (which may, for example, be collocated with the module **102** and/or be connected to the module **102** via one or more wired, wireless, and/or optical links).

If a channel of the wireless network to be characterized is within the block of frequencies already being processed by path 105_1 during time interval T**1**, the DSP module **110** may select that channel for output to the analyzer while continuing to select the satellite television channels for output to the client. If the first wireless network uses a channel that is not within the first block of frequencies already being processed by path 105_1, then the antenna select module **103** and path 105_2 may be configured to select an antenna (e.g., antenna 112_1) that receives a second block of frequencies in which the desired channel lies. The antenna that receives the first block of frequencies may also receive the second block of frequencies, or a different antenna may be selected for receiving the second block of frequencies. The second block of frequencies may be upconverted or downconverted by module 104_2 (e.g., to the same block of frequencies output by module 104_1). The output of module 104_2 may be amplified by LNA 106_2 and digitized by ADC 108_2. The DSP module **110** may select the channel from the digital signal output by ADC 108_2, and output the channel on the connection **114** while concurrently continuing to select the desired satellite television channel(s) selected from the signal output by ADC 108_1.

In an example implementation, a path 105_m may occasionally and/or periodically be allocated to receiving a block of frequencies containing one or more channels of a wireless network to be characterized. Information about the received channel(s) may then be periodically and/or occasionally communicated to an analyzer which may generate coverage and/or usage maps based the channel information received from one or more of instances of the module **102**. The generated coverage and/or usage maps may then be made available to network operators associated with the characterized wireless networks.

Channel information may be conveyed to an analyzer as, for example, time-domain information in the form of one or more of samples of the channel(s) output by one or more the ADCs 108_1-108_M. Additionally or alternatively, channel information may be conveyed to an analyzer as, for example, frequency domain information in the form of a frequency spectrum generated by performing a Fast Fourier Transform (FFT) on samples output by one or more of the ADCs 108_1-108_M. Additionally or alternatively, channel information may be conveyed to an analyzer as symbols, bits of data, and/or other information recovered from the channel after processing (e.g., demodulation, decoding, etc.) by the DSP module **110**.

FIG. **2** depicts an example implementation where the system of FIG. **1** is mounted on customer premises. Shown in FIG. **2** is a satellite reception assembly **202**, a gateway **214**, and an analyzer module **216**. The satellite reception assembly **202** communicates with the gateway **214** via a connection over cable(s) **114** and the gateway **214** communicates with the WAN **250** via broadband connection **240**. In the example implementation depicted, the satellite reception assembly **202** comprises a parabolic reflector **206** and feed horn (which corresponds to antenna 112_2 of FIG. **1**), and a subassembly **204** mounted (e.g., bolted or welded) to a support structure **208**. The support structure **208** in turn, comprises a boom **220** and attaches (e.g., via bolts) to the premises **210** (e.g., to the roof). In another example implementation, rather than a parabolic dish and feed horn, the satellite reception assembly may comprise an array of antenna elements and/or receive modules, the outputs of which may be combined for satellite signal reception.

In an example implementation, the module **102** resides in the subassembly **204**. In another example implementation, various components of the module **102** may be mounted to the premises separate from the satellite reception assembly **202** (e.g., connected via wired and/or wireless connections), but may still be part of the "outdoor unit." In another example implementation, all or a portion of the components of the module **102** may be part of the gateway **214** (or "indoor unit"). Furthermore, although the analyzer **216** is depicted as residing in the WAN **250**, in other implementations, all or a portion of the functions performed by the analyzer **216** may be implemented in the module **102** (e.g., in the DSP module **110**) and/or in the gateway **214**.

The gateway **214** may transmit and/or receive data to and/or from the module **102** via cable(s) **114**, the WAN **250** via broadband connection **240**, and/or one or more client devices **238** via one or more connections **234**. For data from the module **102** to a client device **238**, the gateway **214** may, for example, recover the data from Ethernet frames received over the cable(s) **114** and output the data to the client device **238**. For data from the client device **238** and/or gateway **214** to the module **102**, the gateway **214** may, for example, encapsulate the data in one or more Ethernet frames and output the frames onto the cable(s) **114**. For data between the WAN **250** and the module **102**, the gateway **214** may perform OSI layer-2 switching and/or OSI layer-3 routing. Although the implementation shown in FIG. **2** uses wired connections between the gateway **214** and module **102**, and between the gateway **214** and WAN **250**, other implementations may utilize wireless connections.

The analyzer module **216** may be operable to characterize wireless channels. Characterizing a channel may comprise, for example, measuring signal strength of the channel during one or more time intervals, measuring signal-to-noise ratio of the channel during one or more time intervals, measuring transmissions per unit time on the channel, measuring trans-

mitted data per unit time on the channel, measuring number of unique devices transmitting on the channel during one or more time intervals, measuring symbol error rates, bit error rates, or performing any other desirable measurement or analysis of the wireless channel. How a particular channel is characterized may depend on the wireless technology used on the channel and the extent to which analyzer **216** supports the physical layer, network layer, and/or higher layer protocols of that wireless technology. For example, where only one wireless network uses a particular frequency channel, the analyzer **216** may be operable to characterize the channel based purely on frequency spectrum analysis. Conversely, where a first wireless network and second wireless network are concurrently sharing a particular frequency channel, the analyzer **216** may need the capability of looking at more than just the physical layer signals. For example, the analyzer **216** may need the capability of demodulating signals on of at least one of the networks in order to attribute signals on the channel to one of the networks.

In an example implementation, the analyzer **216** may be operated by, or various functions of the analyzer **216** may be performed by, the satellite provider that operates the satellite reception assembly **202**. In such an implementation, the satellite provider may, for example, sell information collected and/or generated by the analyzer to, for example, other network operators.

In an example implementation, the analyzer **216** may be operated by, or various functions of the analyzer **216** may be performed by, a network operator associated with a wireless network to be characterized. In such an implementation, the network operator may, for example, subscribe to the channel information data output by the satellite reception assemblies **202** operated by the satellite provider.

In an example implementation, the analyzer **216** may be operated by, or various functions of the analyzer **216** may be performed by, a third party service provider. In such an implementation, the third-party service provider may, for example, pay the satellite provider for access to the channel information output by the satellite reception assemblies, analyzes the channel information, and then sells the results of the analysis to wireless network operators.

The module **102** may be configured to receive signals of one or more channels of one or more wireless networks for the purpose of relaying the signals (or data recovered from the signals) to other devices that desire to consume data carried on the channel(s). For example, the module **102** may be configured to receive signals of one or more channels of a satellite broadcast network associated with satellite **230** for the purpose of conveying the signals (or data recovered from the signals) to the client device **238** for consumption (e.g., so a user of the client **238** can watch a television program). As another example, the module **102** may be configured to receive signals of a channel of a wireless network (e.g., a Wi-Fi, cellular, WiGig, or WiMAX network) handled by the base station **232** for the purpose of conveying the signals (or data recovered from the signals) to the client device **238** for consumption (e.g., so a user of the client device **238** can view a webpage).

Additionally or alternatively, the module **102** may be configured to receive signals of one or more channels of one or more wireless networks for the purpose of characterizing the channel(s). The channel characteristics may be used to characterize the wireless network(s) as a whole. Characterizing a channel may comprise sampling (e.g., via one or more of ADC $\mathbf{108}_i$) signals on the channel during one or more time intervals and storing the samples for further processing. Characterization may comprise performing measurements and/or analyses on the samples in the time domain and/or converting the samples to the frequency domain (e.g., via a Fast Fourier Transform (FFT) and performing measurements and/or analyses in the frequency domain.

Which channels of which wireless networks the module **102** is configured to receive and process may depend on control signals received wirelessly and/or via the cable(s) **114**. Such control signals may be received from, for example, the gateway **214** and/or from the analyzer **216**.

In an example implementation, the module **102** may be configured such that signals of multiple wireless networks and/or multiple channels of a particular wireless network are received and digitized concurrently by one or more of the receive paths $\mathbf{105}_1$-$\mathbf{105}_M$. In such an implementation, the DSP module **110** may then dynamically select which channels are conveyed to which devices. For example, the DSP module **110** may select a satellite broadcast channel present in the digitized received signal for output to the client device **238** and may concurrently select a channel of a cellular network for output to the analyzer **216** (as illustrated by arrow **242**).

FIG. **3** depicts an example implementation where the system of FIG. **1** is mounted to a cellular tower. Shown in FIG. **3** is a satellite reception assembly **202**, an analyzer module **216**, and a cellular tower **306**. The satellite reception assembly **202**, the WAN **250**, and the analyzer **216** may be as described above with reference to FIG. **2**.

In an example implementation, the module **102** resides in the subassembly **204**. In another example implementation, various components of the module **102** may be mounted on or near the cellular tower **306** separate from the satellite reception assembly **202** (e.g., connected via wired and/or wireless connections. Furthermore, although the analyzer **216** is depicted as residing in the WAN **250**, in other implementations, all or a portion of the functions performed by the analyzer **216** may be implemented in the module **102** (e.g., in the DSP module **110**) and/or in separate modules mounted on or near the cellular tower **306**.

In an example implementation, one or more antenna elements of the cellular tower **306** may be coupled to the module **102** via a cable **308** and may function as one or more of the antennas **112** described above with reference to FIG. **1**. The module **102** may communicate channel information to the analyzer **216** via a one or more cables **304** (or wireless connections) as illustrated by arrow **342**.

FIG. **4** is a diagram illustrating characterization of a plurality of wireless networks using deployed satellite reception assemblies. Shown in FIG. **4** are base stations **402***a* and **402***b* of a first wireless network (e.g., a cellular network), base stations **406***a*-**406***e* of a second wireless network (e.g., a Wi-Fi network), and satellite reception assemblies $\mathbf{400}_1$-$\mathbf{400}_6$, each of which may be, for example, an instance of the satellite reception assembly **202**. The base stations **402***a* and **402***b* cover areas **404***a* and **404***b*, respectively, using one or more wireless channels. Similarly, the base stations **406***a*-**406***e* cover areas **408***a*-**408***e*, respectively, using one or more wireless channels.

In operation, the satellite reception assemblies $\mathbf{400}_1$-$\mathbf{400}_6$ may receive signals on one or more channels of the first wireless network and/or on one or more channels of the second wireless network. The satellite reception assemblies $\mathbf{400}_1$-$\mathbf{400}_6$ may then report information about the channels to a centralized module which may use the channel information to characterize the channels individually, the first wireless network as a whole, and/or the second wireless network as a whole. The centralized module may be, for example, an analyzer **216** residing in one of the satellite reception assemblies $\mathbf{400}_1$-$\mathbf{400}_2$, collocated with one of the satellite reception

assemblies, or residing on one or more servers of a WAN that are reachable via broadband connections that serve the satellite reception assemblies 400_1-400_2.

In an example implementation, channel information reported by the satellite reception assembly 400_1 may indicate that it can receive signals from base station **406***a* and base station **402***a* and may further indicate characteristics of the received signals such as signal strength, SNR, error rate, etc. The other satellite receptions assemblies 400_2-400_6 may report similar information about signals of the first and/or second wireless network that they can receive. The analyzer may then use the reported channel information, along with information about the location of the satellite reception assemblies 400_1-400_6 (e.g., available in a data structure and/or reported by the satellite reception assemblies 400_1-400_6 along with the channel information) to generate coverage maps for the first and second wireless networks. Generation of the coverage maps may also utilize known information about the first and second wireless network such as location of the base stations **406***a*-**406***e* and **402***a* and **402***b*.

In an example implementation, channel information reported by the satellite reception assemblies 400_1-400_6 may indicate the presence of client devices on the first and/or second wireless network. For example, the satellite reception assemblies may be capable of demodulating and decoding packet headers that identify a source of transmissions on the first wireless network and/or the second wireless network. In such an instance, the reported channel information from a satellite reception assembly 400_j (j being an integer between 1 and 6) could indicate how many devices it heard on a particular network during one or more particular time intervals, an identifier associated with the devices heard on a particular network during one or more particular time intervals, etc. This reported channel information may be utilized for generating maps and/or charts that indicate network usage vs. time.

In an example implementation, each of the satellite reception assemblies 400_1-400_6 may sample, during one or more time intervals, an entire block of frequencies which encompasses one or more channels of the first wireless network and/or one or more channels of the second wireless. The samples, and/or the results of performing an FFT on the samples, from a plurality of the satellite reception assemblies 400_1-400_6 may be aggregated by the analyzer **216** and the aggregate data may be made available to the network operators that operate the wireless networks. The network operators can use this aggregate data in combination with their knowledge of their own network (e.g., knowledge of base station locations, channels on which various devices of the network operate, time slots allocated to various transmissions on the network, etc.) to determine coverage and/or usage of their network, to detect network outages, to plan their network, etc. In this manner, the network satellite reception assemblies 400_1-400_6 may eliminate the need for the network operators to send out service technicians to measure network performance in locations where one of the satellite reception assemblies 400_1-400_6 resides.

FIG. **5** is a flowchart illustrating an example process for determining characteristics of a wireless network based on information collected via one or more satellite reception assemblies. In step **504**, a module **102** (e.g., residing in a satellite reception assembly) is configured to receive one or more channels of a wireless network that is to be characterized. In step **506**, the module **102** receives signals on the one or more channels. In step **508**, the module **102** conveys information about the signals received on the one or more channels to an analyzer. This may comprise for example, forwarding the raw signals, in analog or digital form, to the analyzer; converting the received signals to corresponding frequency domain information and conveying the frequency domain information to the analyzer; and/or processing the received signals (e.g., demodulating and/or decoding at least a portion of the signals) and conveying the recovered symbols or data to the analyzer. In step **510**, the analyzer uses the received channel information from the module **102**, and possibly from other instances of the module **102**, to determine characteristics of the network such as network coverage and/or network usage. In step **512**, the analyzer may make the determined characteristics available, possibly in exchange for payment, to interested parties (e.g., the network operator that operates the wireless network, its competitors, and/or news agencies that report on the wireless industry, etc.).

Using channel information from a one or more satellite reception assemblies, an up-to-date and comprehensive database (or other data structure) of signal sources, the location of such sources (e.g., using GPS, signal strength measurement, triangulation such as might be performed by satellite reception assemblies based on time-of-arrival of signal markers such as preambles or pilot symbols, and/or other methods), and other characteristics such as, for example, protected/unprotected status, frequency offset, frequency of transmission, and/or estimated power levels can therefore be created and maintained in real-time. The database can be made available to, for example, other databases, entities, devices, mobile applications, desktop applications, etc. Such a database may be used, for example, for purposes such as determining nearby hotspots, positioning, time synchronization, hand-off, frequency allocation, frequency planning, or coverage planning and analysis. For example, such a database could provide a wireless network operator with information regarding what spectrum is currently available in which locations. As another example, such a database could be used to track statistical spectral usage over time to allow more intelligent spectrum allocation, or time-varying licensing/sharing/leasing/auctioning of spectrum over time to one or more service operators or individual device users. For example, a network operator may analyze its network, determine locations and/or times of low usage and offer to lease bandwidth in those locations and/or during those times to other network operators. The offer may be in the form of an auction where multiple network providers could bid on the low-usage times and/or locations. Such determination of resources to be licensed may be automated using a web-based system that network operators could log into to see network resources that are available for lease or purchase.

FIGS. **6**A-**6**C illustrate example data structures which may be populated based on data collected by one or more satellite reception assemblies. In FIG. **6**A, the data structure comprises M×N (where M an N are both integers) records, with each record storing one or more characteristics (e.g., SNR, frequency offset, power levels, number of devices using the channel, etc.) of a particular channel in a particular location. In the example implementation shown in FIG. **6**A, there are N satellite reception assemblies in a corresponding N locations, with each satellite reception assembly collecting data on M (an integer) channels. The locations could be identified by, for example, GPS coordinates, street address, and/or a unique identifier associated with the satellite reception assembly located there. In FIG. **6**B, the data structure comprises M×N records, with each record storing characteristics for a corresponding channel during each of Z (an integer) time intervals. In FIG. **6**C, the data structure comprises N records, with each record storing a list of base stations detected by the satellite reception assembly in a particular location, respective char-

acteristics of those base stations and/or their transmissions, a list of client devices detected by the satellite reception assembly in a particular location, and respective characteristics of those client devices and/or their transmissions.

FIGS. **7**A-**7**D illustrate examples of coverage maps which may be generated based on data collected by one or more satellite reception assemblies. For illustration, example maps corresponding to the network shown in FIG. **4** are depicted.

The map FIG. **7**A, depicts coverage areas and base stations associated with the coverage areas. Different graphical images are used for the two wireless networks to enable distinguishing which coverage areas and which base stations belong to each network.

The map in FIG. **7**B shows power levels for base stations of a particular wireless network (more dots per in^2 corresponding to higher power levels). The areas **702***a* and **704***a* corresponding to higher power level, the areas **702***b* and **704***b* corresponding to an intermediate power level, and the areas **702***c* and **704***c* corresponding to a lower power level.

The map in FIG. **7**C shows which channels each base station of a particular wireless network is transmitting on. In the example implementation, each of base stations **406***a*-**406***c*, **406***d* are using a first channel (indicated by cross-hatching) and the base station **406***d* is using a second channel (indicated by dots).

The map in FIG. **7**D shows wireless device population density, with areas **710** being areas having a higher number of wireless devices per square meter, areas **712** being areas having an intermediate number of wireless devices per square meter, and areas **714** being areas having a lower number of wireless devices per square meter. The devices counted may be, for example, network specific or across all wireless networks present in the area.

Other implementations may provide a non-transitory computer readable medium and/or storage medium, and/or a non-transitory machine readable medium and/or storage medium, having stored thereon, a machine code and/or a computer program having at least one code section executable by a machine and/or a computer, thereby causing the machine and/or computer to perform the steps as described herein for multi-standard coverage map generation.

Accordingly, the present method and/or apparatus may be realized in hardware, software, or a combination of hardware and software. The present method and/or apparatus may be realized in a centralized fashion in at least one computing system, or in a distributed fashion where different elements are spread across several interconnected computing systems. Any kind of computing system or other apparatus adapted for carrying out the methods described herein is suited. A typical combination of hardware and software may be a general-purpose computing system with a program or other code that, when being loaded and executed, controls the computing system such that it carries out the methods described herein. Another typical implementation may comprise an application specific integrated circuit or chip.

The present method and/or apparatus may also be embedded in a computer program product, which comprises all the features enabling the implementation of the methods described herein, and which when loaded in a computer system is able to carry out these methods. Computer program in the present context means any expression, in any language, code or notation, of a set of instructions intended to cause a system having an information processing capability to perform a particular function either directly or after either or both of the following: a) conversion to another language, code or notation; b) reproduction in a different material form.

While the present method and/or apparatus has been described with reference to certain implementations, it will be understood by those skilled in the art that various changes may be made and equivalents may be substituted without departing from the scope of the present method and/or apparatus. In addition, many modifications may be made to adapt a particular situation or material to the teachings of the present disclosure without departing from its scope. Therefore, it is intended that the present method and/or apparatus not be limited to the particular implementations disclosed, but that the present method and/or apparatus will include all implementations falling within the scope of the appended claims.

What is claimed is:

1. A system comprising:

one or more circuits operable to:

receive a block of frequencies;

processes said received block of frequencies to recover signals of a first wireless network, said first wireless network being a satellite broadcast network;

transmit said signals of said first wireless network to a receiver;

process said received block of frequencies to recover signals of a second wireless network; and

transmit said signals of said second wireless network to an analyzer that is operable to determine coverage and/or usage of said second wireless network.

2. The system of claim **1**, wherein said one or more circuits reside in a satellite reception assembly.

3. The system of claim **2**, wherein said satellite reception assembly is intended for installation at a satellite subscriber's home or office.

4. The system of claim **2**, wherein said satellite reception assembly comprises a parabolic reflector, a feed horn, and a low-noise block downconverter mounted to a rigid support structure.

5. The system of claim **1**, wherein said second wireless network is a cellular, WiMAX, WiGig, or Wi-Fi network.

6. The system of claim **1**, wherein said one or more circuits are operable to select among a plurality of antennas for receiving said block of frequencies.

7. A method performed by a satellite reception assembly, the method comprising:

receiving signals in a first frequency band, said frequency band encompassing signals of a plurality of wireless networks;

analyzing said received signals to determine coverage and/or usage of each of said plurality of wireless networks; and

making said determined coverage and/or usage available to one or more network operators associated with said plurality of wireless networks.

8. The method of claim **7**, wherein said satellite reception assembly comprises a parabolic reflector, a feed horn, and a low-noise block downconverter mounted to a rigid support structure.

9. The method of claim **7**, wherein said satellite reception assembly provides satellite television service to a home or office at which it is installed.

10. The method of claim **7**, wherein said plurality of wireless networks comprises one or more of the following: a satellite broadcast network, a cellular network, a Wi-Fi network, a WiMAX network, and a WiGig network.

11. A system comprising:

one or more circuits for use in a satellite reception assembly, said one or more circuits being operable to:

receive a channel of a first wireless network, process said received channel of said first wireless network, and transmit said processed received channel of said first

wireless network to a receiver, wherein said first wireless network is a satellite broadcast network; and

receive a channel of a second wireless network and output information about said channel of said second wireless network to an analyzer that is operable to determine coverage and/or usage of said second wireless network.

12. The one or more circuits of claim **11**, wherein said satellite reception assembly comprises a parabolic reflector, a feed horn, and a low-noise block downconverter mounted to a rigid support structure.

13. The one or more circuits of claim **11**, wherein said satellite reception assembly provides satellite television service to a home or office at which it is installed.

14. The one or more circuits of claim **11**, wherein said second wireless network is one of a cellular network, a Wi-Fi network, a WiMAX network, and a WiGig network.

15. A method comprising:

receiving, from each one of a plurality of satellite reception assemblies, information about a channel of a wireless network received by said one of said plurality of satellite reception assemblies;

analyzing said channel information to determine coverage and/or usage of said wireless network.

16. The method of claim **15**, wherein said satellite reception assembly comprises a parabolic reflector, a feed horn, and a low-noise block downconverter mounted to a rigid support structure.

17. The method of claim **15**, wherein at least one of said plurality of satellite reception assemblies provides satellite television service to a home or office at which it is installed.

18. The method of claim **15** comprising transmitting said determined coverage and/or usage to a network operator associated with said wireless network.

19. The method of claim **16** wherein said wireless network is a cellular, Wi-Fi, WiMAX, or WiGig network.

20. The method of claim **17**, comprising generating a map depicting said determined coverage and/or usage of said wireless network.

* * * * *