US 20080207136A1

(19) United States

(12) Patent Application Publication

(10) Pub. No.: US 2008/0207136 A1

(43) Pub. Date: Aug. 28, 2008

Tang et al.

(54) HIGH DYNAMIC RANGE TRANCEIVER FOR COGNITIVE RADIO

(76) Inventors: **Haiyun Tang**, Saratoga, CA (US); **Stuart Rumley**, Redwood City, CA (US)

Correspondence Address:
WEST & ASSOCIATES, A PC
2815 MITCHELL DRIVE, SUITE 209
WALNUT CREEK, CA 94598 (US)

(21) Appl. No.: 12/034,633

(22) Filed: Feb. 20, 2008

Related U.S. Application Data

(60) Provisional application No. 60/890,801, filed on Feb. 20, 2007.

Publication Classification

(51) Int. Cl.
H04B 1/38 (2006.01)

(52) U.S. Cl. 455/73

(57) ABSTRACT

Embodiments of cognitive radio technology can recover and utilize underutilized portions of statically-allocated radio-frequency spectrum. A plurality of sensing methods can be employed. Transmission power control can be responsive to adjacent channel measurements. Digital pre-distortion techniques can enhance performance. Embodiments of a high DNR transceiver architecture can be employed.

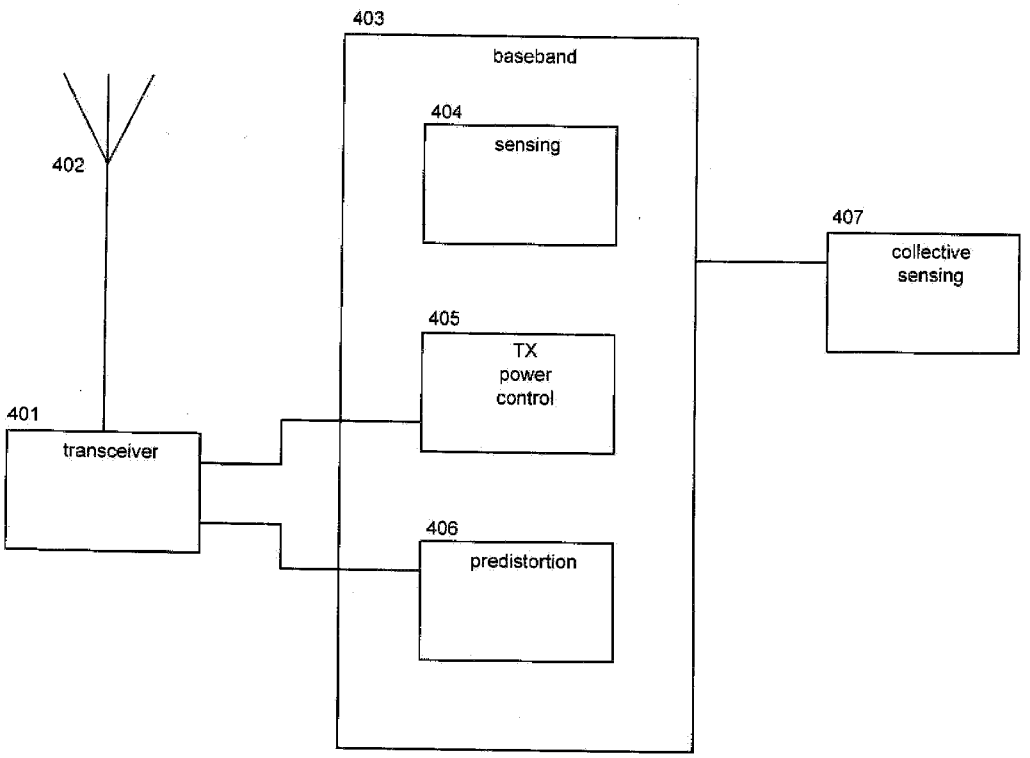

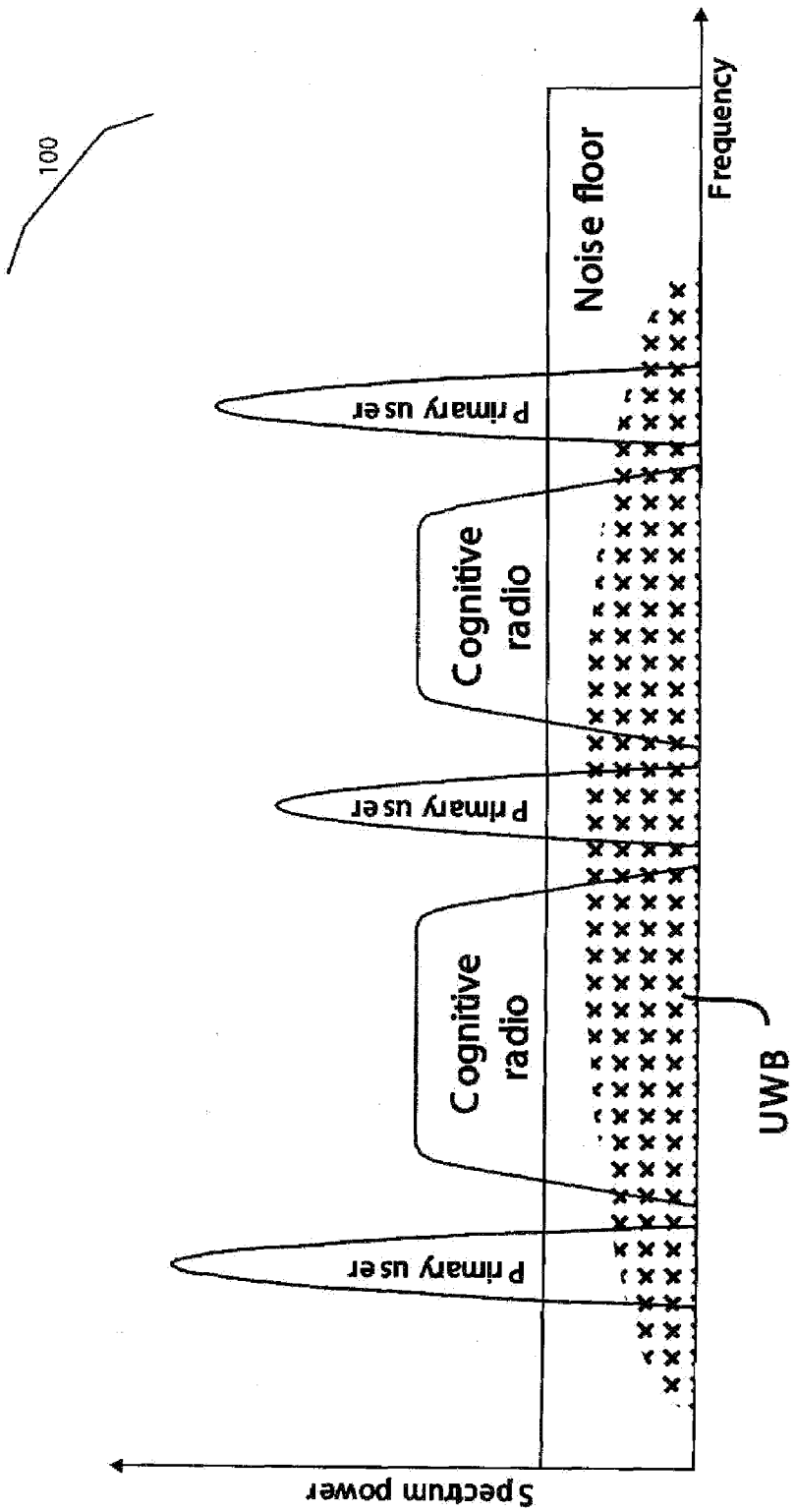
100
Spectrum power
Frequency
Noise floor
Primary user
Cognitive radio
Primary user
Cognitive radio
Primary user
UWB

FIG 1

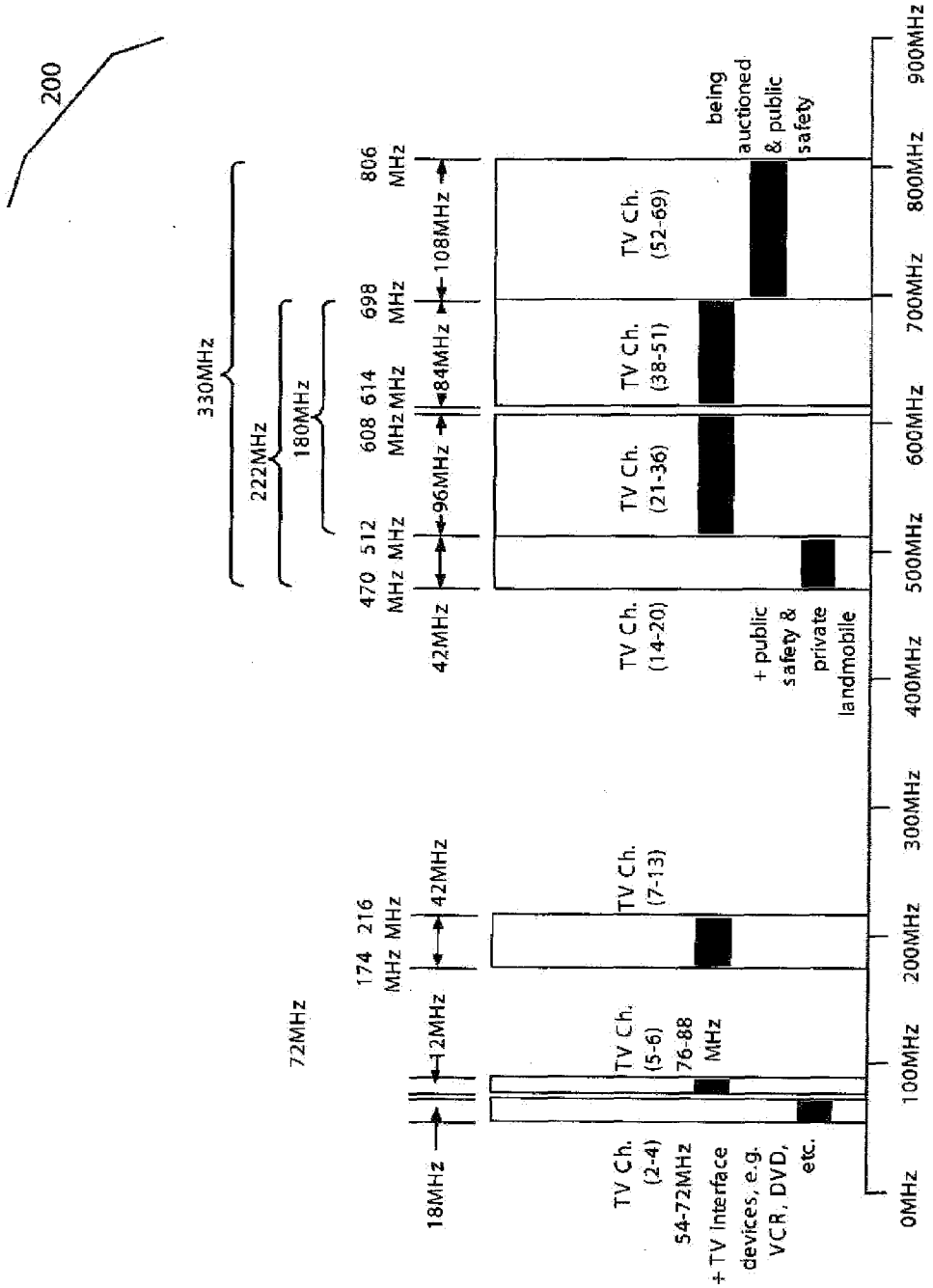
200
330MHz
222MHz
180MHz
72MHz
18MHz
12MHz
42MHz
96MHz
84MHz
108MHz
42MHz
174 MHz
216 MHz
470 MHz
512 MHz
608 MHz
614 MHz
698 MHz
806 MHz
TV Ch. (2-4) 54-72MHz + TV Interface devices, e.g. VCR, DVD, etc.
TV Ch. (5-6) 76-88 MHz
TV Ch. (7-13)
TV Ch. (14-20)
+ public safety & private landmobile
TV Ch. (21-36)
TV Ch. (38-51)
TV Ch. (52-69)
being auctioned & public safety
0MHz
100MHz
200MHz
300MHz
400MHz
500MHz
600MHz
700MHz
800MHz
900MHz

FIG 2

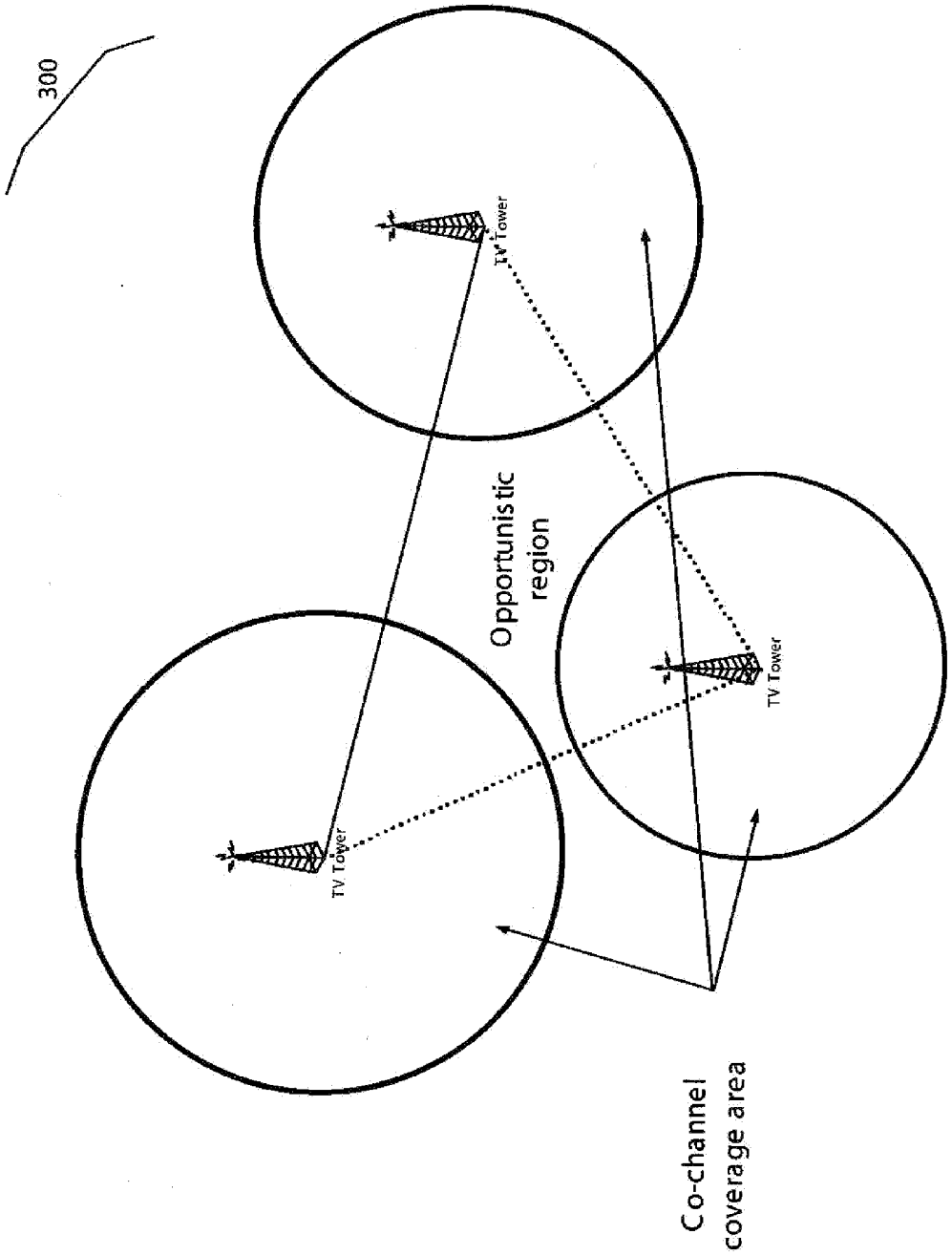
300
TV Tower
TV Tower
TV Tower
Opportunistic region
Co-channel coverage area

FIG 3

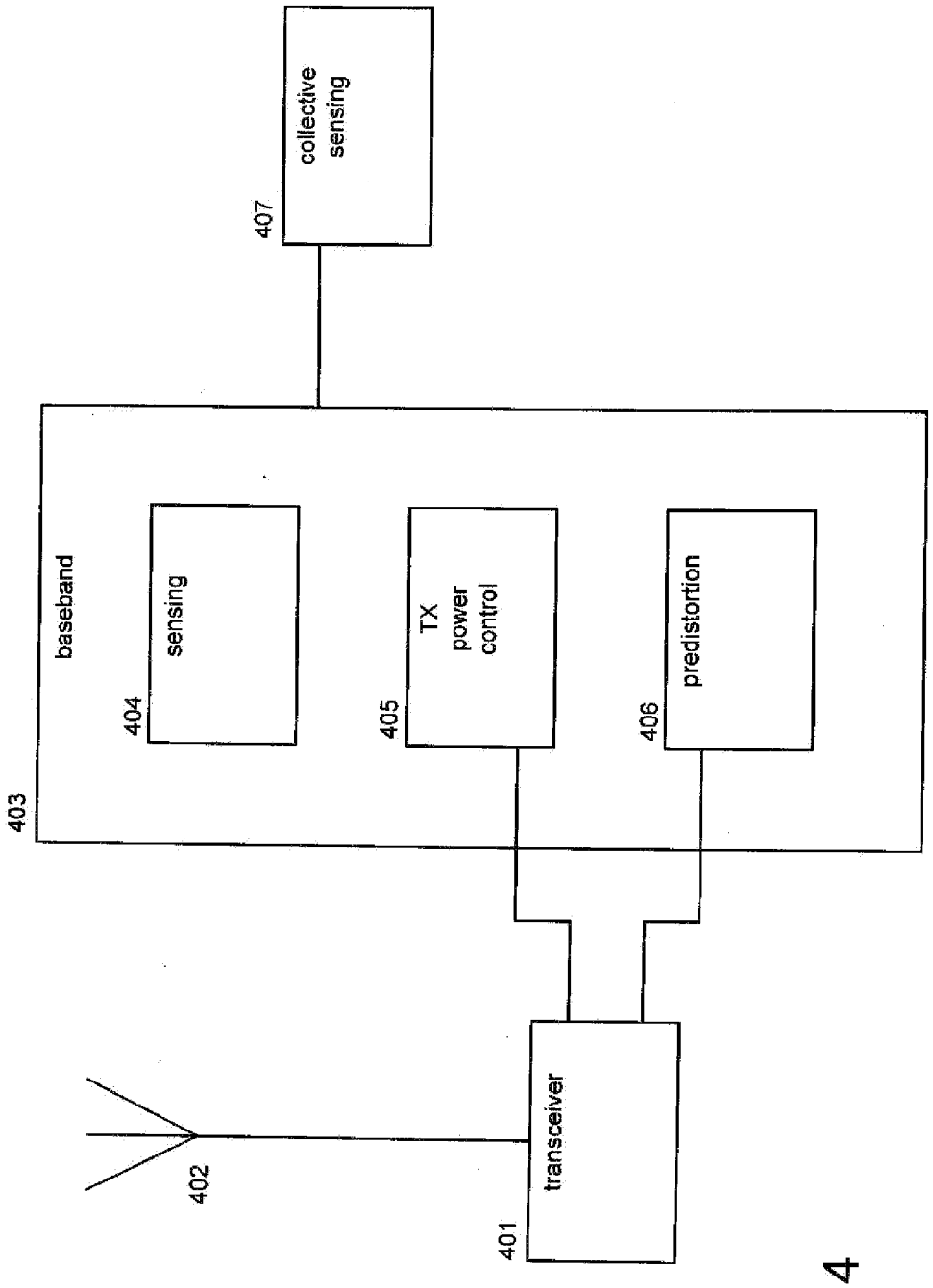
407
collective sensing
403
baseband
404
sensing
405
TX power control
406
predistortion
402
401
transceiver

FIG 4

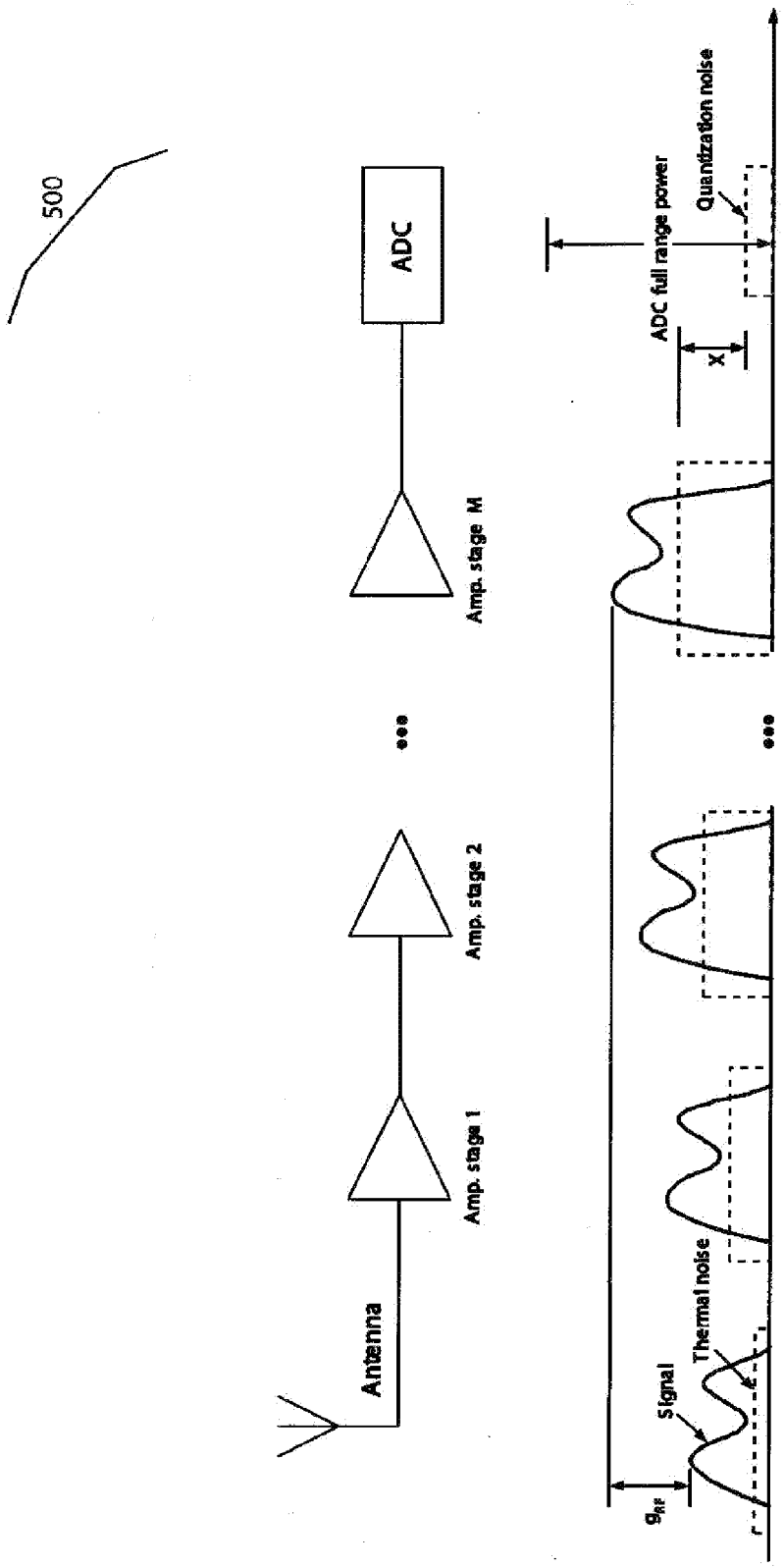
500
Antenna
Amp. stage 1
Amp. stage 2
Amp. stage M
ADC
Signal
Thermal noise
g_{RF}
ADC full range power
Quantization noise
x

FIG 5

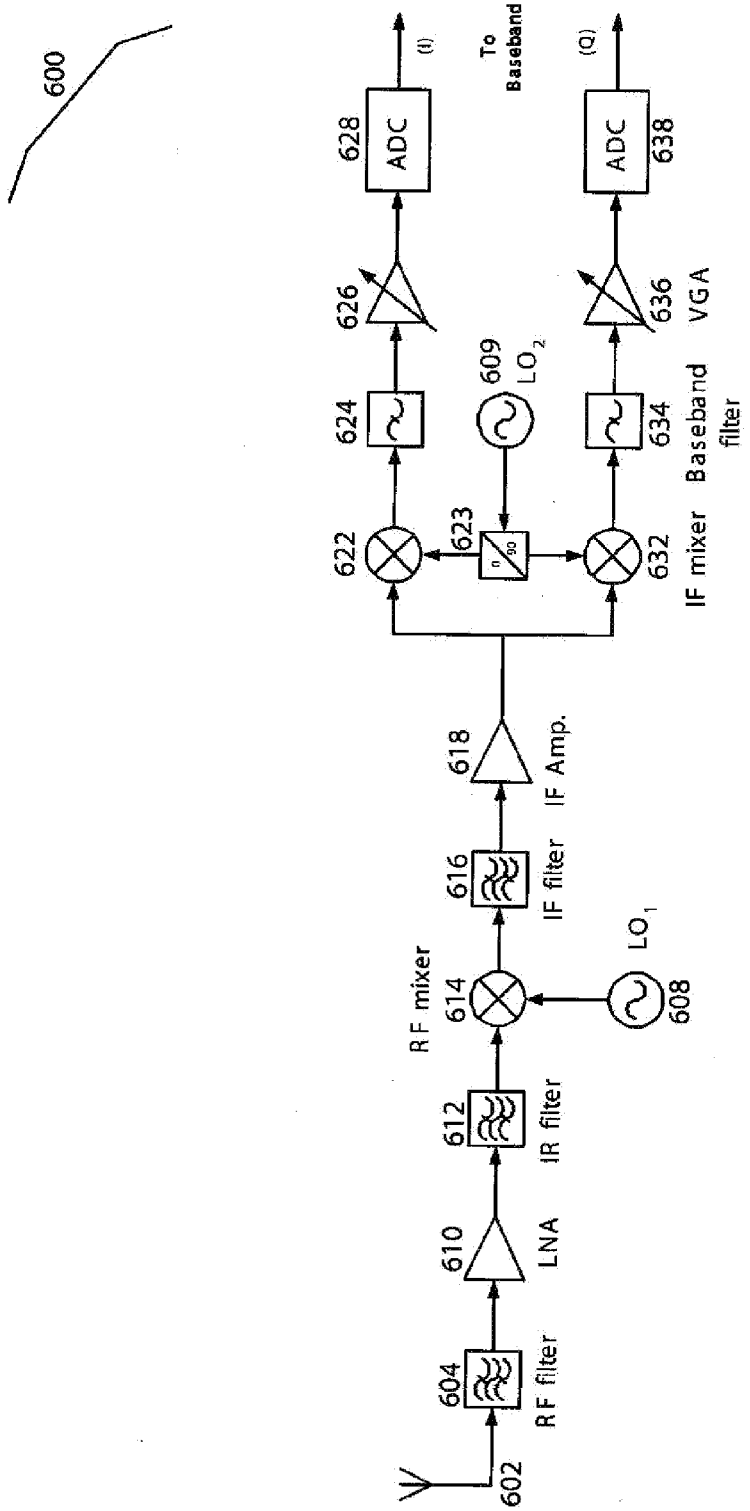
600
602
604
RF filter
610
LNA
612
IR filter
RF mixer
614
608
LO_1
616
IF filter
618
IF Amp.
622
623
0
90
624
626
628
ADC
(I)
To Baseband
609
LO_2
632
IF mixer
634
Baseband filter
636
VGA
638
ADC
(Q)

FIG 6

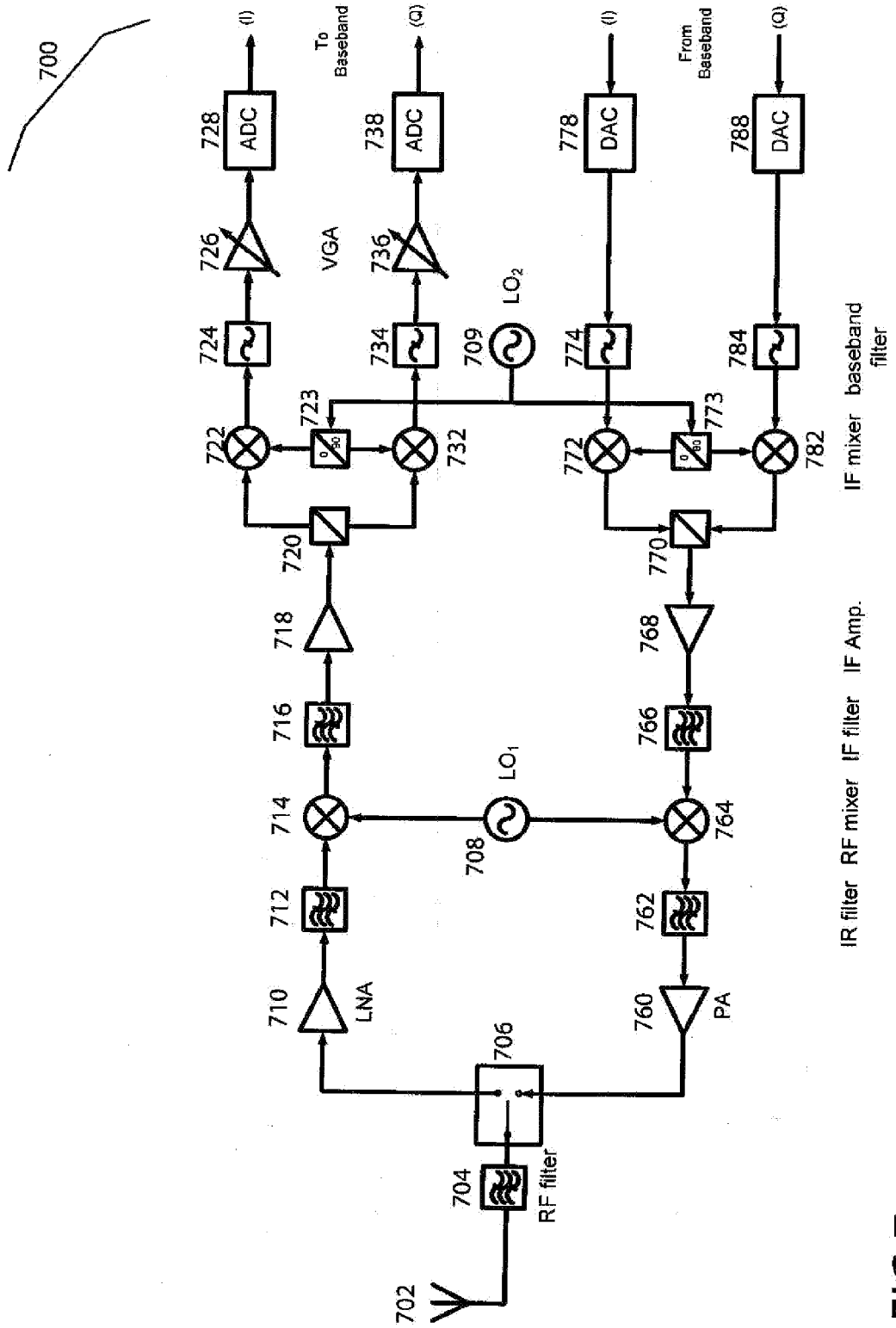
700
702
704
RF filter
706
710
LNA
712
714
716
718
720
722
723
724
726
728
ADC
(I)
To Baseband
VGA
732
734
736
738
ADC
(Q)
708
LO1
709
LO2
760
PA
762
764
766
768
770
772
773
774
778
DAC
(I)
From Baseband
782
784
788
DAC
(Q)
IR filter
RF mixer
IF filter
IF Amp.
IF mixer
baseband filter

FIG 7

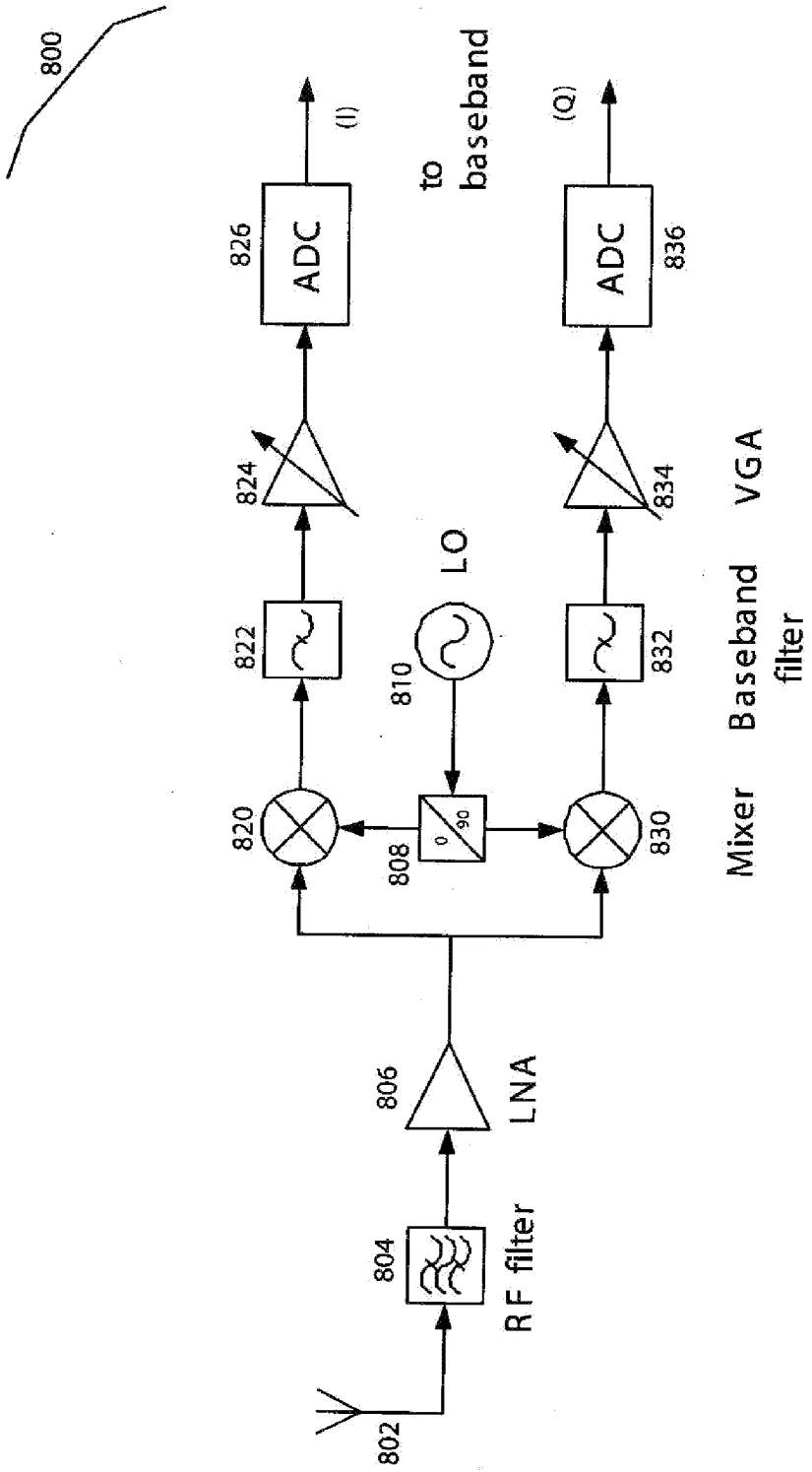
800
802
804
RF filter
806
LNA
808
0
90
810
LO
820
822
824
826
ADC
(I)
to baseband
830
832
834
836
ADC
(Q)
Mixer
Baseband filter
VGA

FIG 8

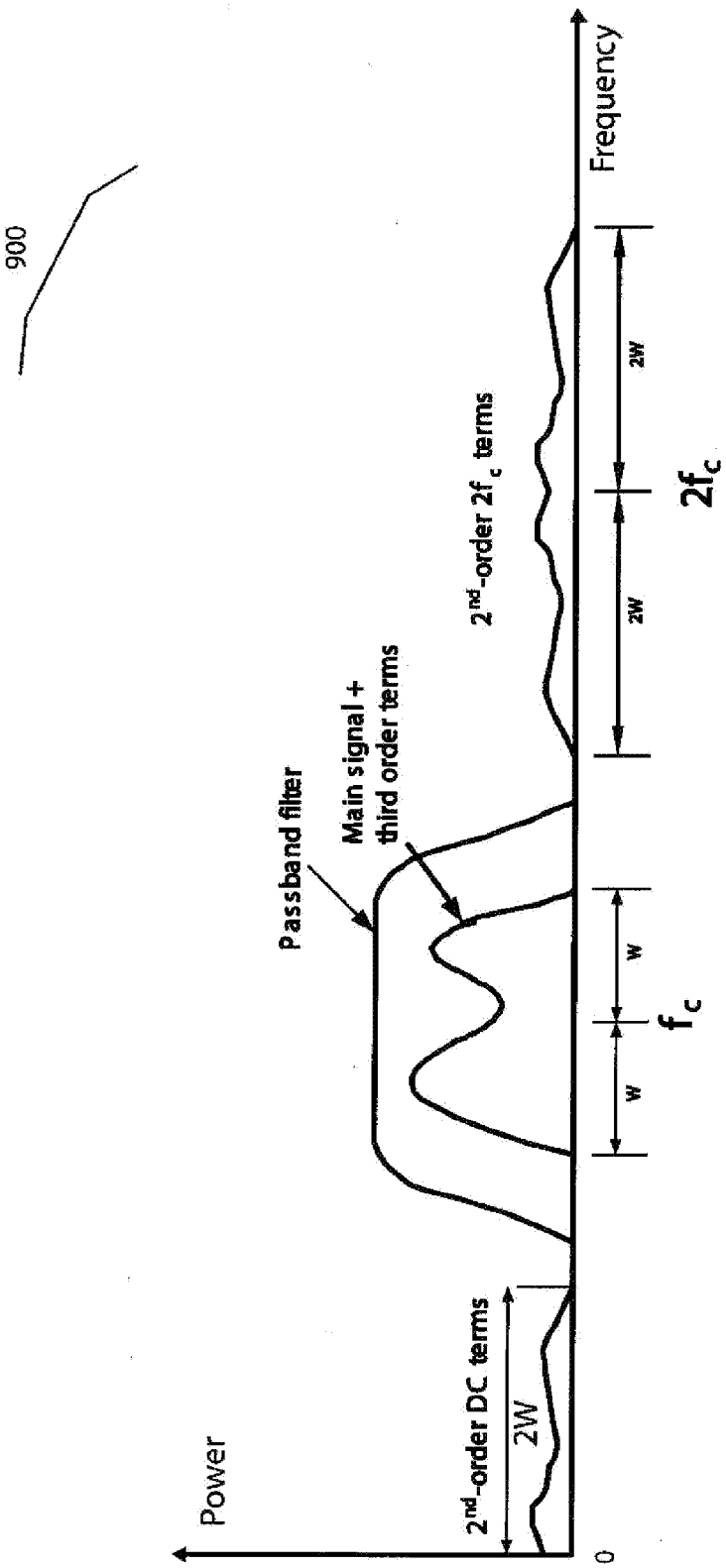
900
Power
Frequency
0
2nd-order DC terms
2W
Passband filter
Main signal +
third order terms
2nd-order 2fc terms
W
W
fc
2W
2W
2fc

FIG 9

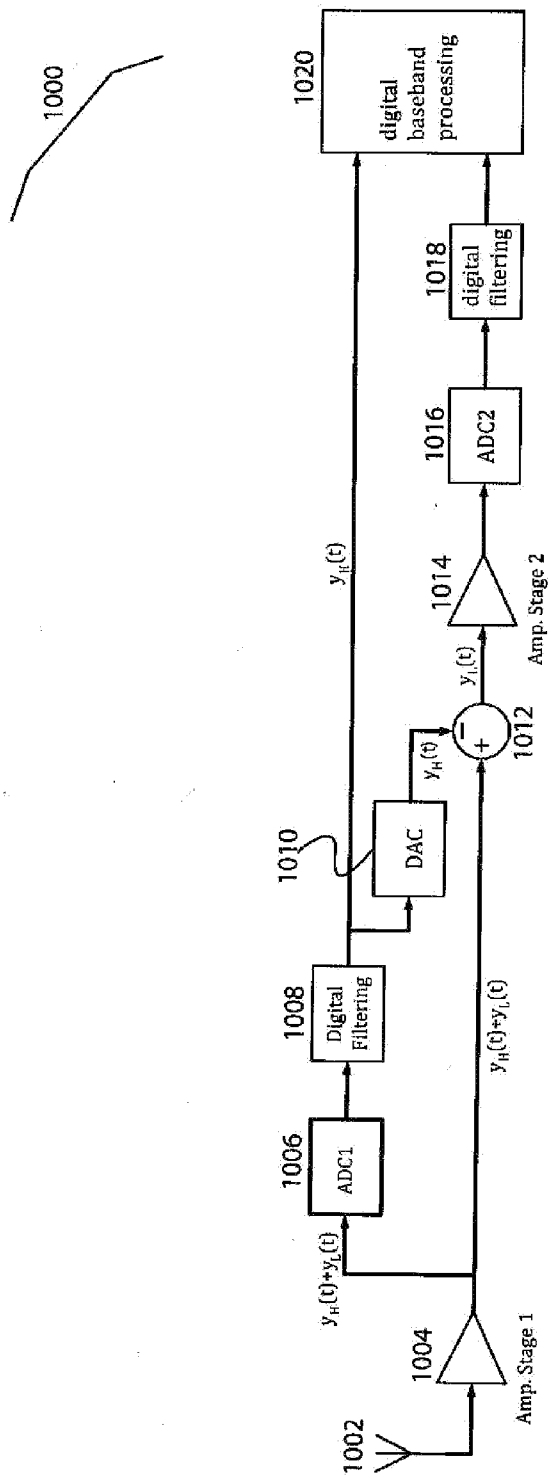
1000
1020
digital baseband processing
1018
digital filtering
1016
ADC2
1014
Amp. Stage 2
$y_H(t)$
$y_L(t)$
1012
$y_H(t)$
1010
DAC
1008
Digital Filtering
$y_H(t)+y_L(t)$
1006
ADC1
$y_H(t)+y_L(t)$
1004
Amp. Stage 1
1002

FIG 10

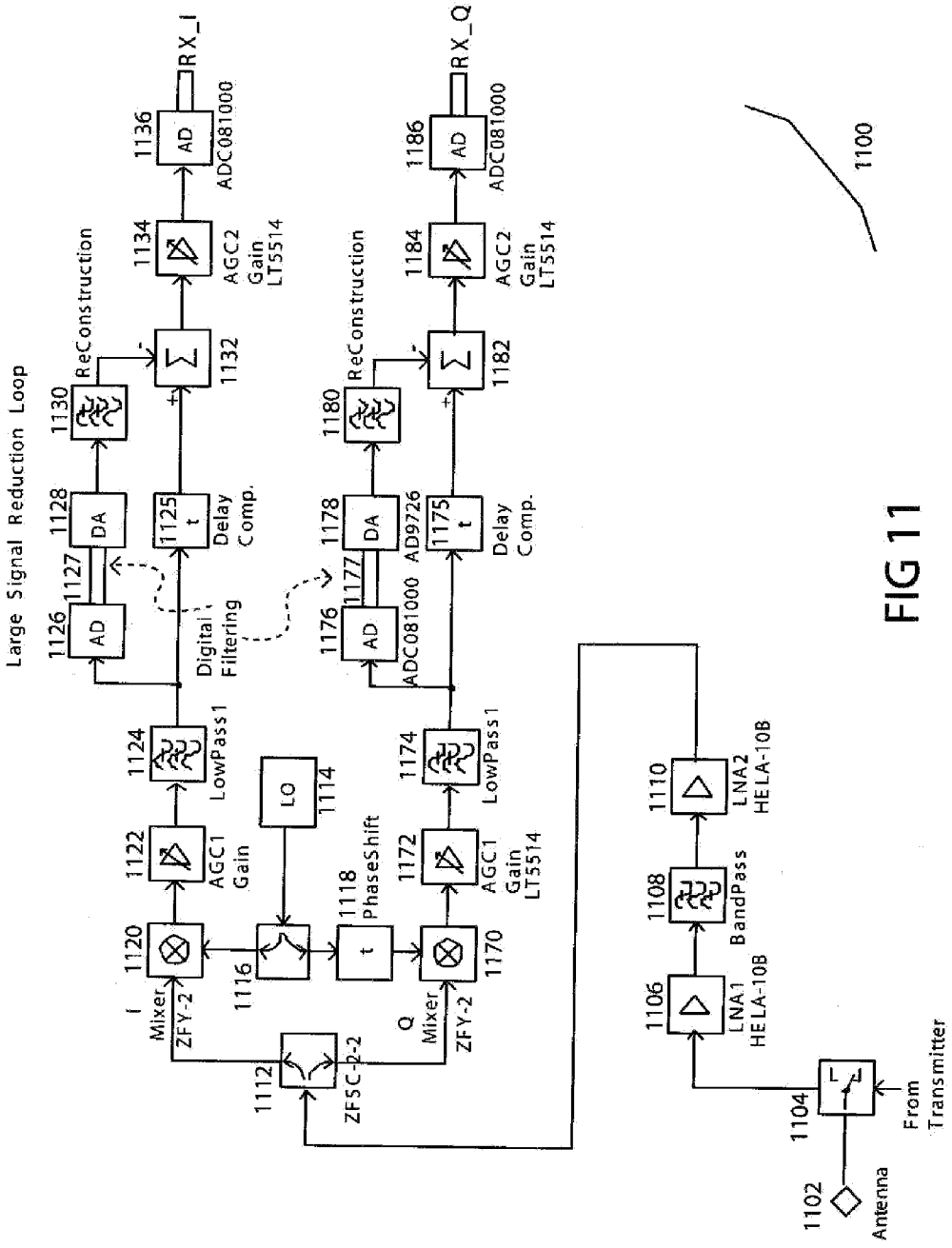
Large Signal Reduction Loop
1100
1102
Antenna
1104
From Transmitter
1106
LNA1 HELA-10B
1108
BandPass
1110
LNA2 HELA-10B
1112
ZFSC-2-2
1114
LO
1116
1118
PhaseShift
1120
I Mixer
ZFY-2
1122
AGC1 Gain
1124
LowPass1
1125
t
Delay Comp.
1126
AD
1127
1128
DA
1130
ReConstruction
1132
1134
AGC2 Gain LT5514
1136
AD
ADC081000
RX_I
1170
Q Mixer
ZFY-2
1172
AGC1 Gain LT5514
1174
LowPass1
1175
t
Delay Comp.
1176
AD
ADC081000
1177
1178
DA
AD9726
1180
ReConstruction
1182
1184
AGC2 Gain LT5514
1186
AD
ADC081000
RX_Q

FIG 11

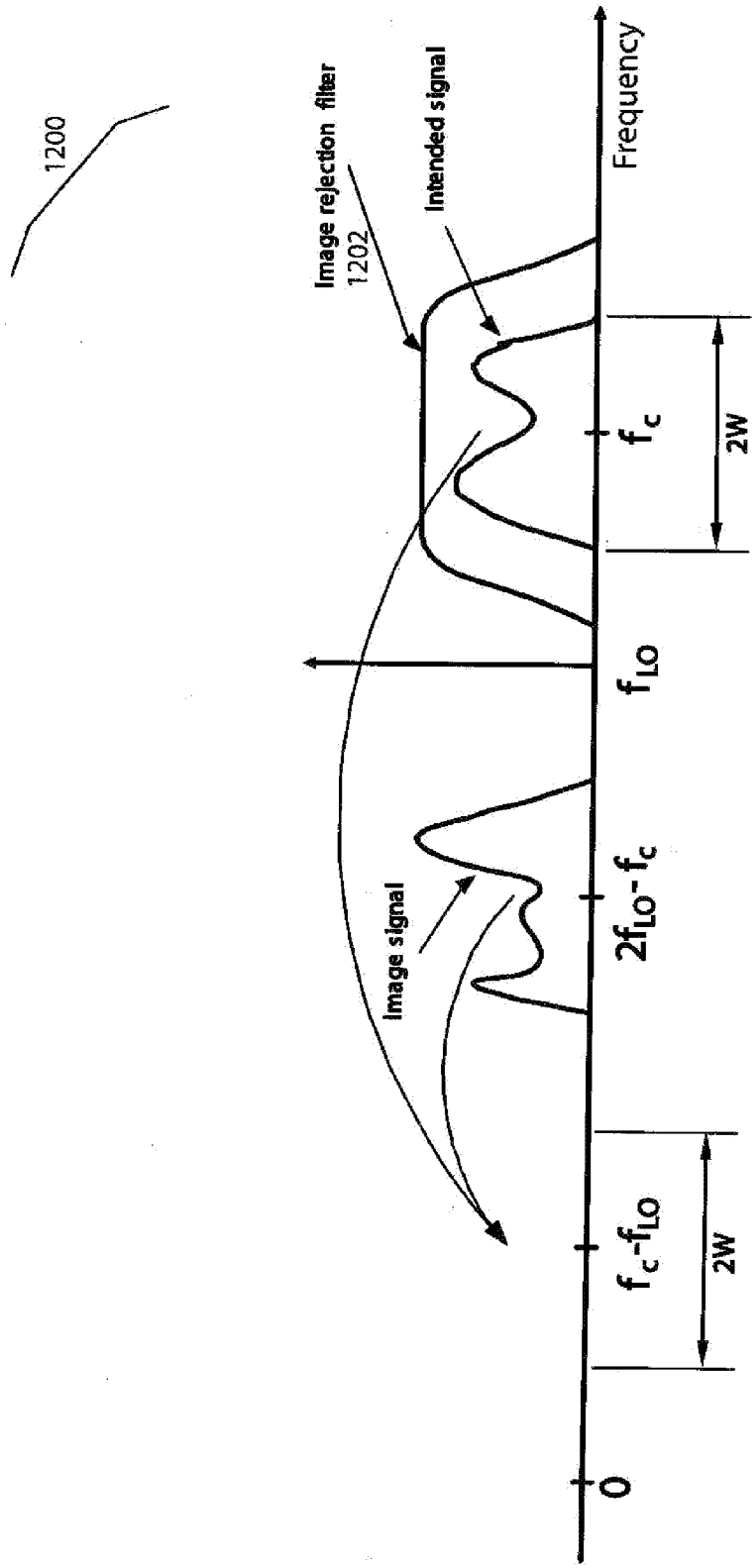
1200
Image rejection filter
1202
Intended signal
Frequency
Image signal
0
f_c-f_{LO}
2W
$2f_{LO}$-f_c
f_{LO}
f_c
2W

FIG 12

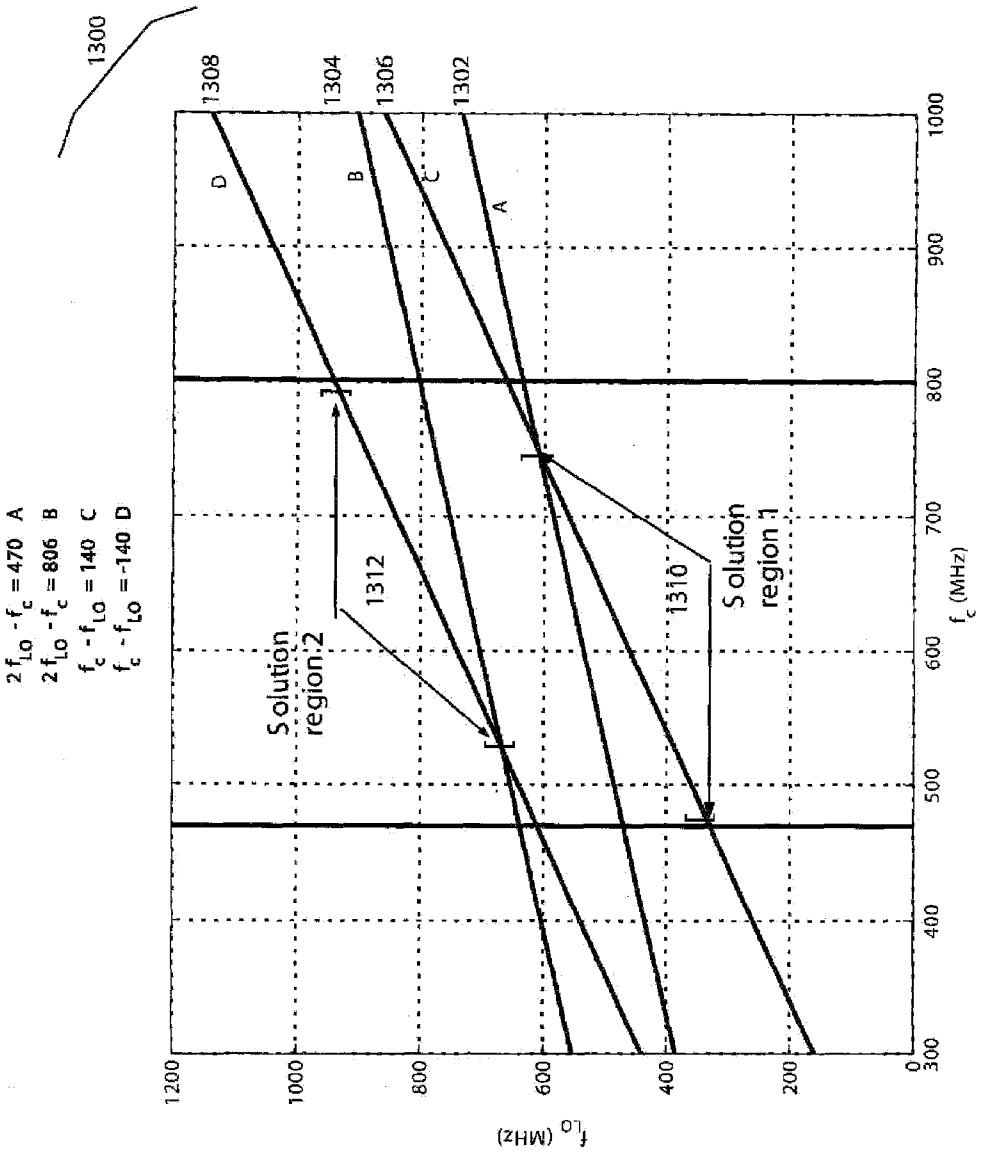
1300
1308
1304
1306
1302
D
B
C
A
$2f_{LO} - f_c = 470$ A
$2f_{LO} - f_c = 806$ B
$f_c - f_{LO} = 140$ C
$f_c - f_{LO} = -140$ D
Solution region 2
1312
1310
Solution region 1
f_{LO} (MHz)
f_c (MHz)
1200
1000
800
600
400
200
0
300
400
500
600
700
800
900
1000

FIG 13

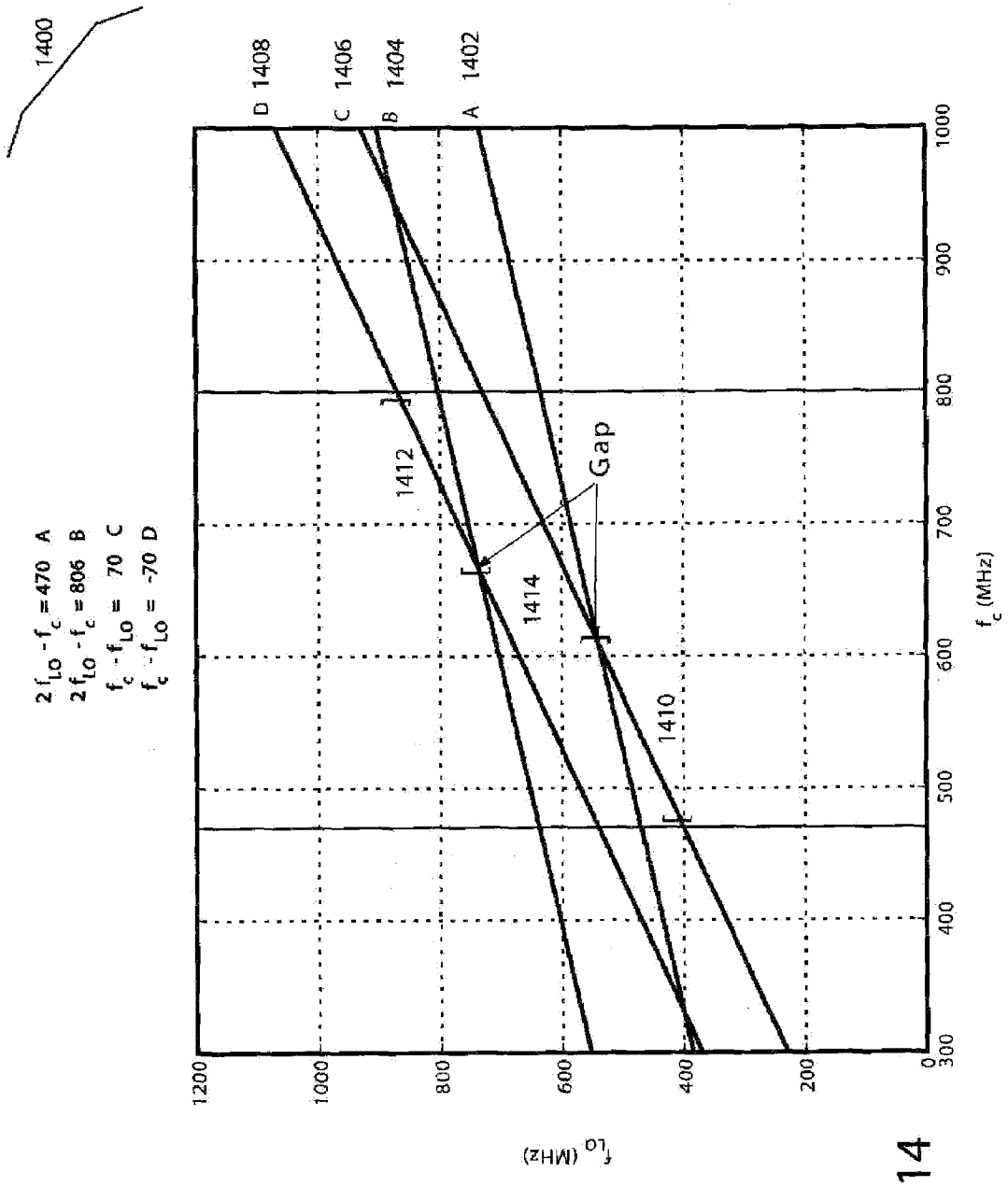
1400
$2f_{LO} - f_c = 470$ A
$2f_{LO} - f_c = 806$ B
$f_c - f_{LO} = 70$ C
$f_c - f_{LO} = -70$ D
D 1408
C 1406
B 1404
A 1402
1412
Gap
1414
1410
f_{LO} (MHz)
f_c (MHz)
1200
1000
800
600
400
200
0
300
400
500
600
700
800
900
1000

FIG 14

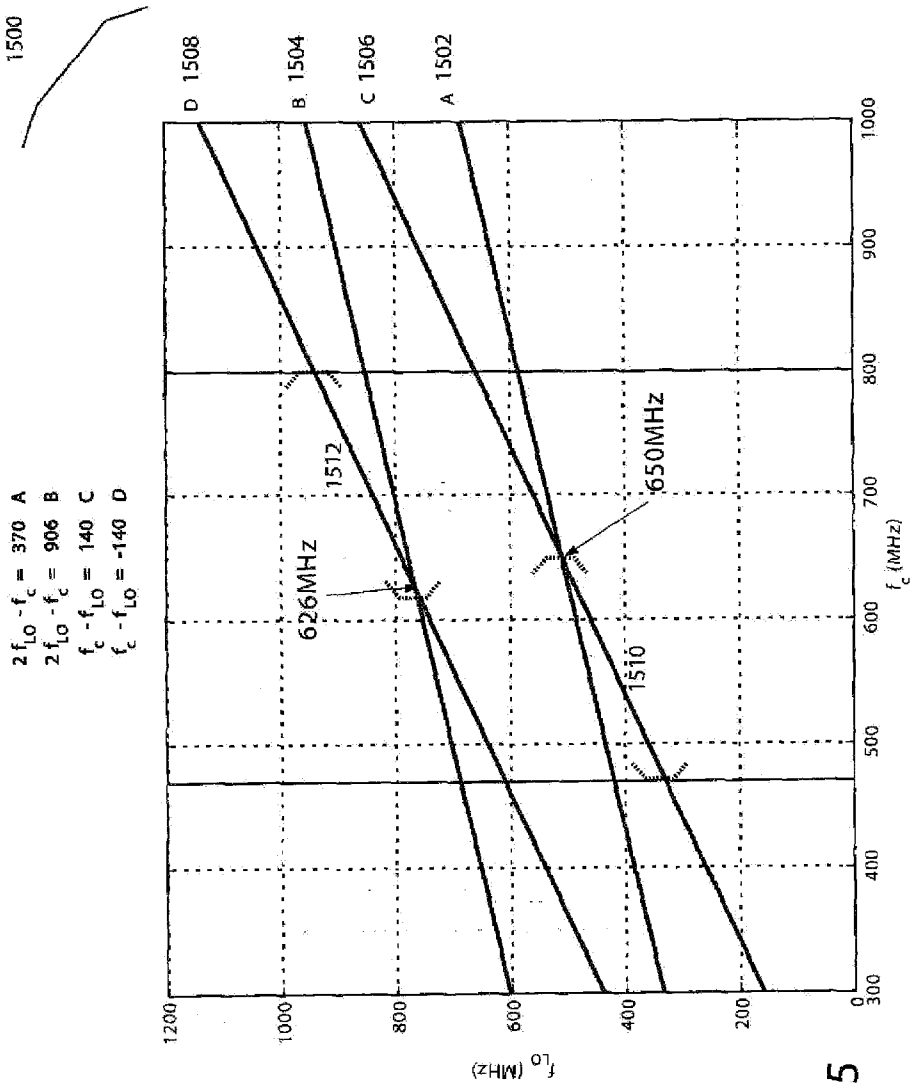
1500
2 f_LO - f_c = 370 A
2 f_LO - f_c = 906 B
f_c - f_LO = 140 C
f_c - f_LO = -140 D
D 1508
B 1504
C 1506
A 1502
1512
626MHz
650MHz
1510
f_LO (MHz)
f_c (MHz)
1200
1000
800
600
400
200
0
300
400
500
600
700
800
900
1000

FIG 15

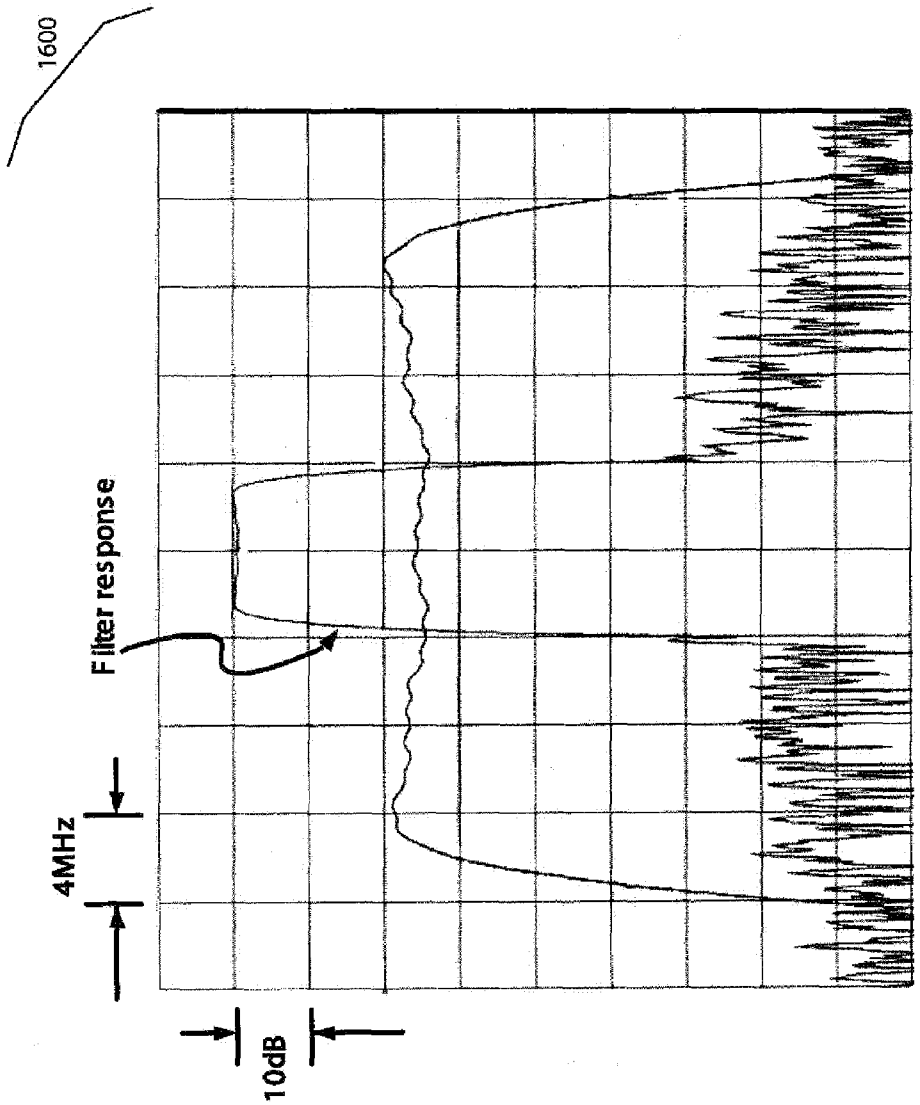

FIG 16

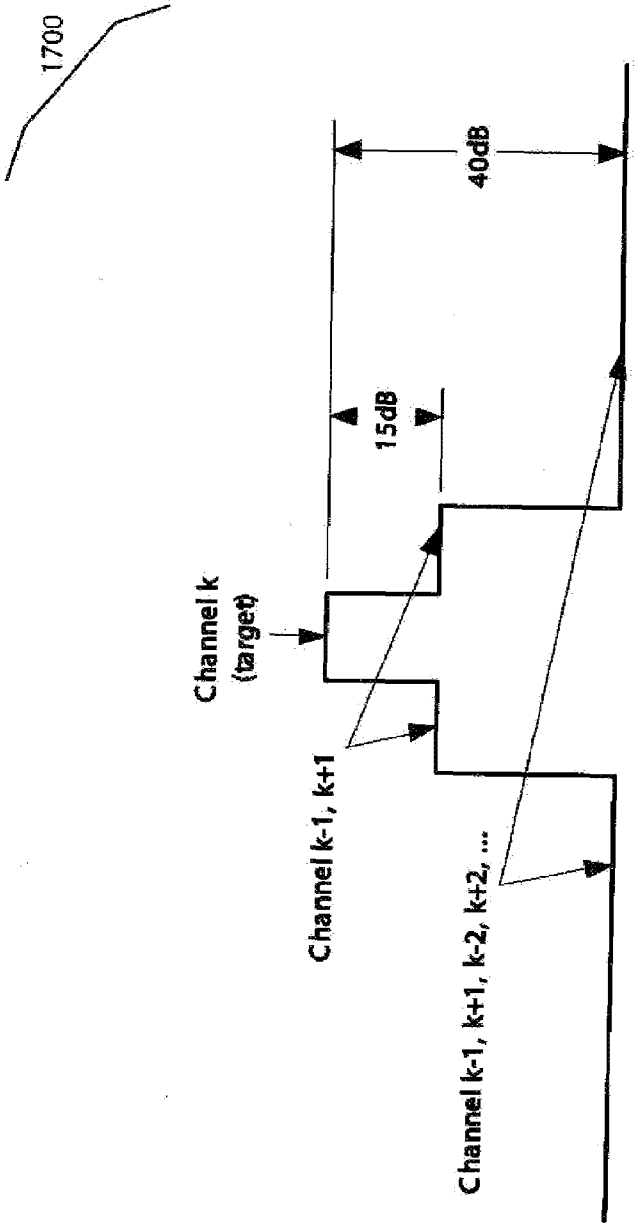
1700
40dB
15dB
Channel k
(target)
Channel k-1, k+1
Channel k-1, k+1, k-2, k+2, ...

FIG 17

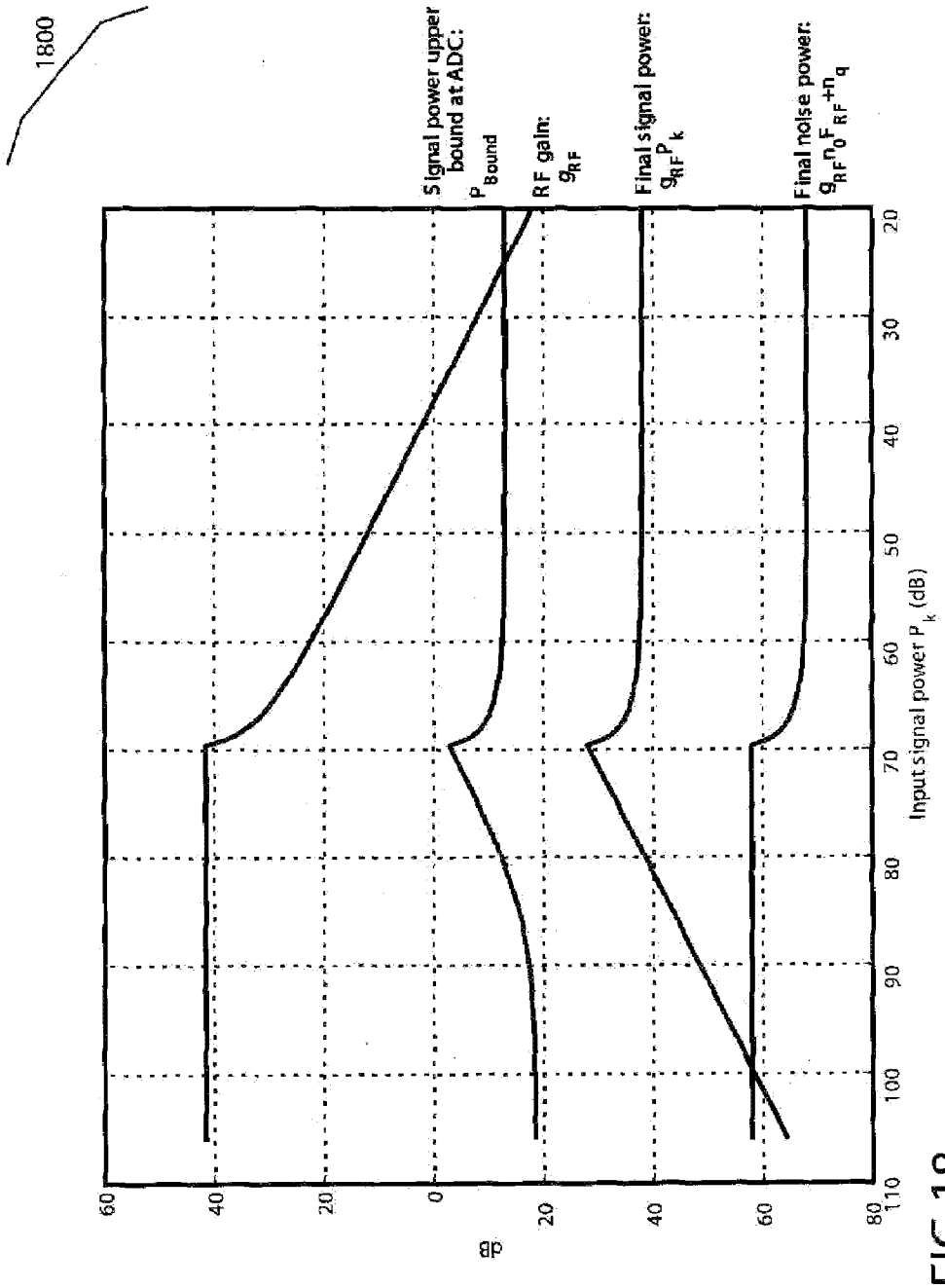
1800
Signal power upper bound at ADC: P_{Bound}
RF gain: g_{RF}
Final signal power: $g_{RF}P_k$
Final noise power: $g_{RF}n_0F_{RF}+n_q$
dB
60
40
20
0
20
40
60
80
110
100
90
80
70
60
50
40
30
20
Input signal power P_k (dB)

FIG 18

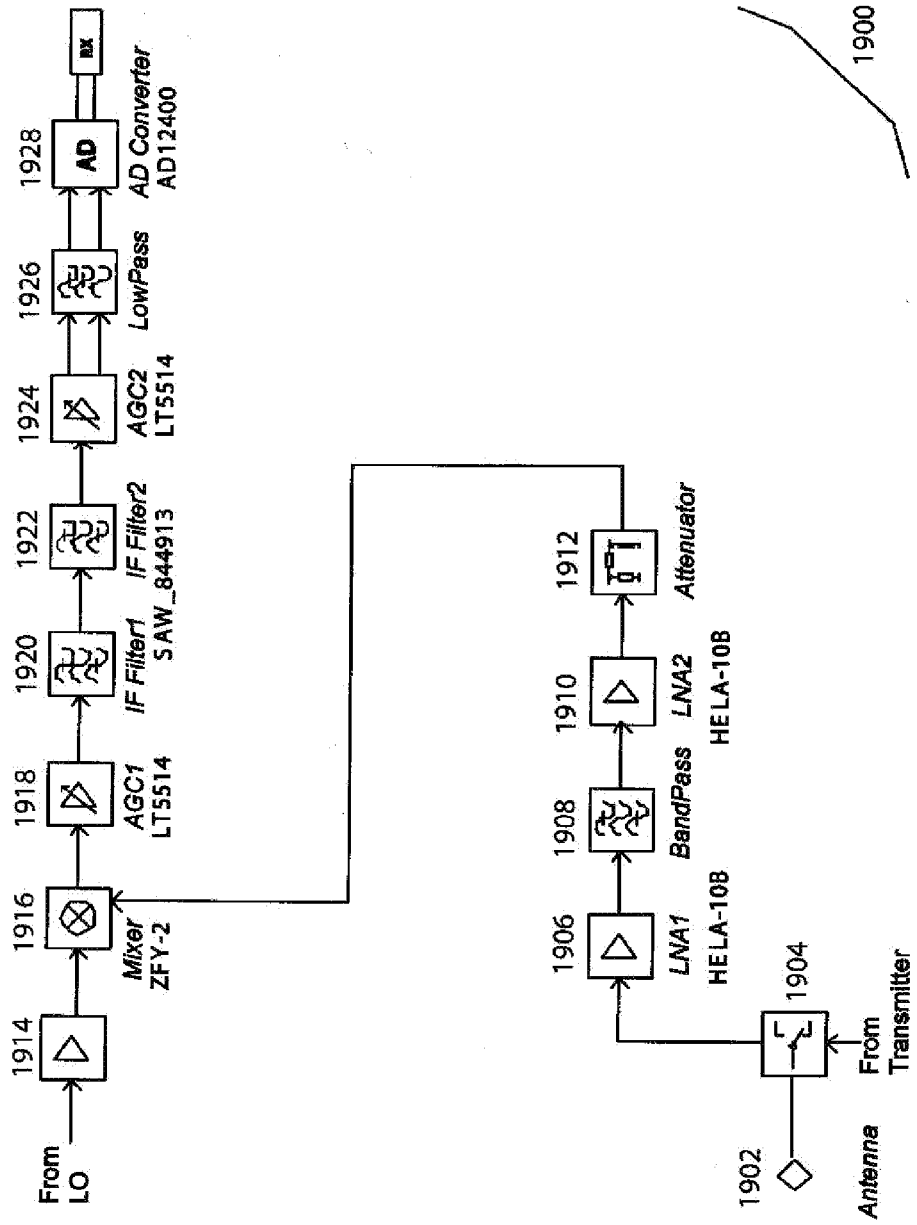
1900
1902
Antenna
1904
From Transmitter
1906
LNA1
HELA-10B
1908
BandPass
1910
LNA2
HELA-10B
1912
Attenuator
From LO
1914
1916
Mixer
ZFY-2
1918
AGC1
LT5514
1920
IF Filter1
SAW_844913
1922
IF Filter2
1924
AGC2
LT5514
1926
LowPass
1928
AD
AD Converter
AD12400
BX

FIG 19

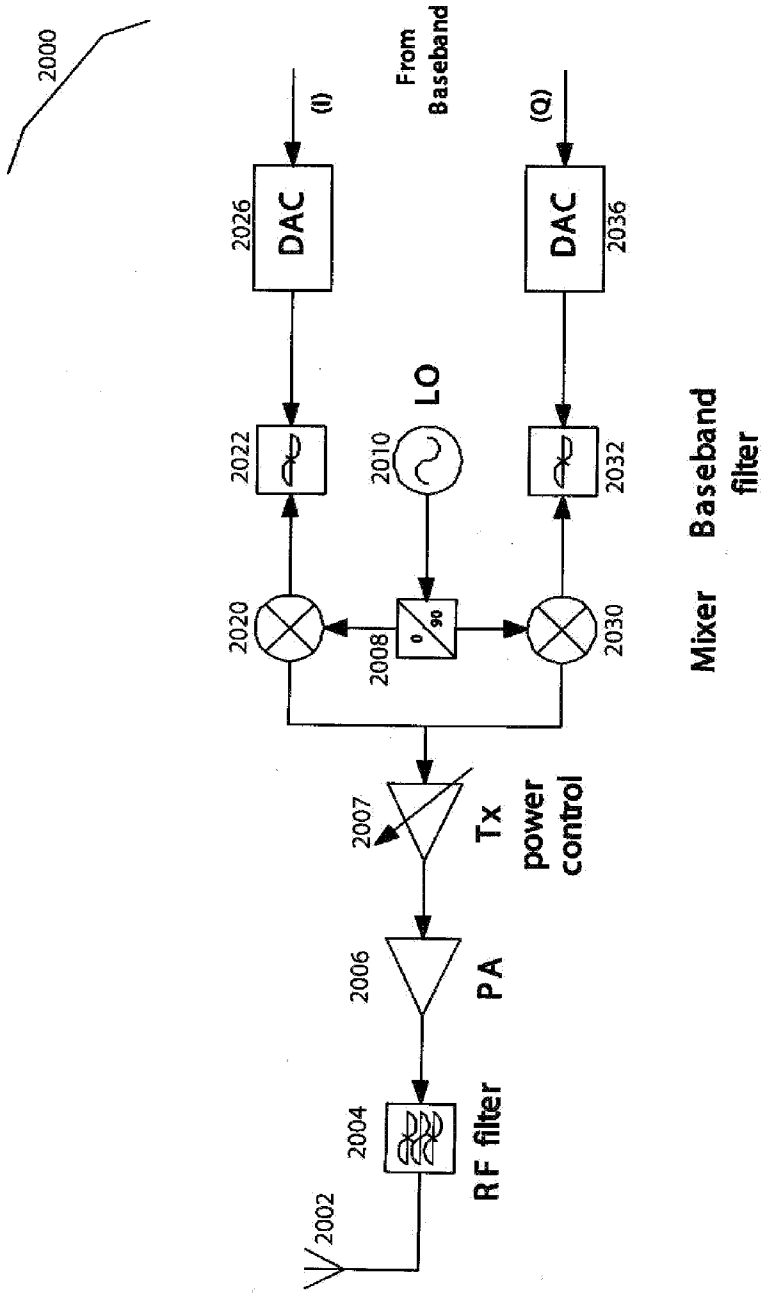
2000
2026
DAC
(I)
From Baseband
(Q)
DAC
2036
2022
2010
LO
2032
Baseband filter
2020
2008
0
90
2030
Mixer
2007
Tx power control
2006
PA
2004
RF filter
2002

FIG 20

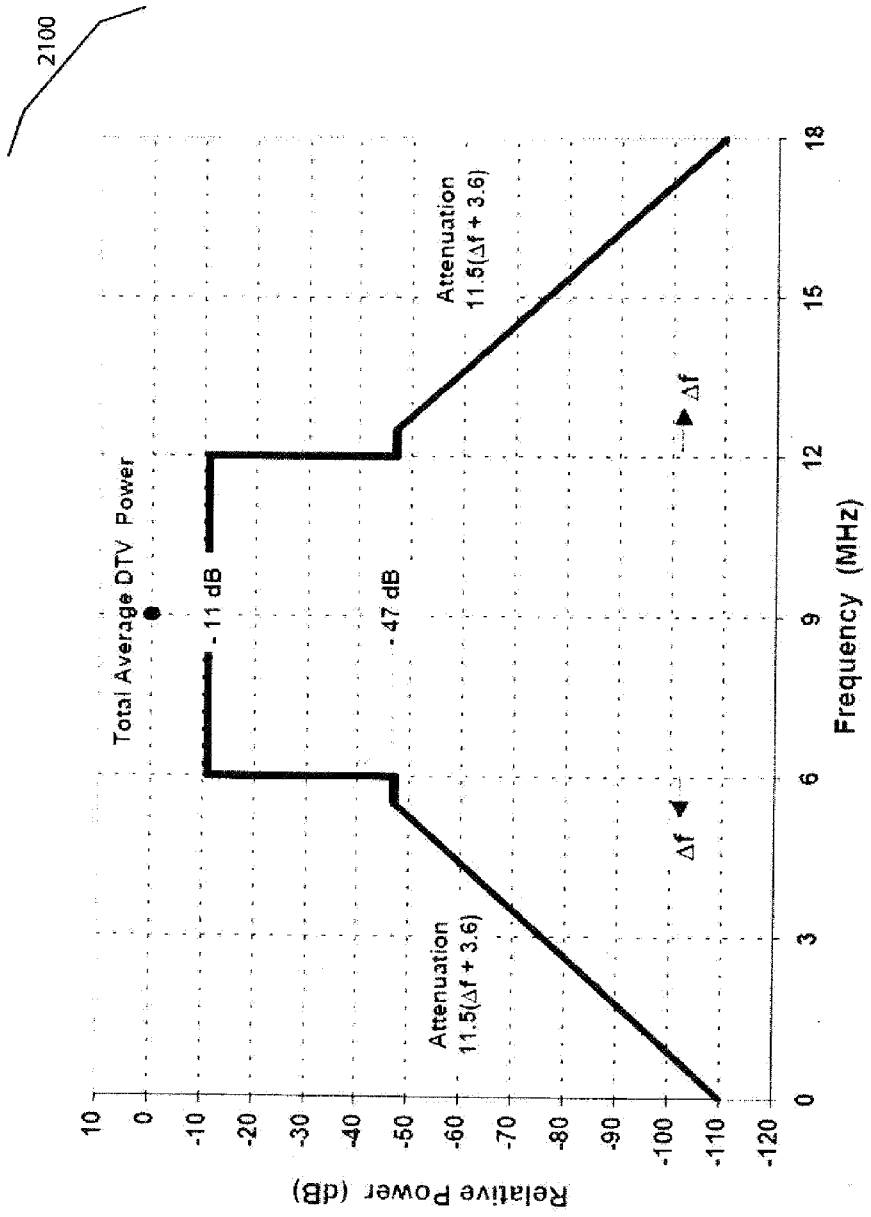
2100
Total Average DTV Power
- 11 dB
- 47 dB
Attenuation
11.5(Δf + 3.6)
Attenuation
11.5(Δf + 3.6)
Δf
Δf
Relative Power (dB)
10
0
-10
-20
-30
-40
-50
-60
-70
-80
-90
-100
-110
-120
0
3
6
9
12
15
18
Frequency (MHz)

FIG 21

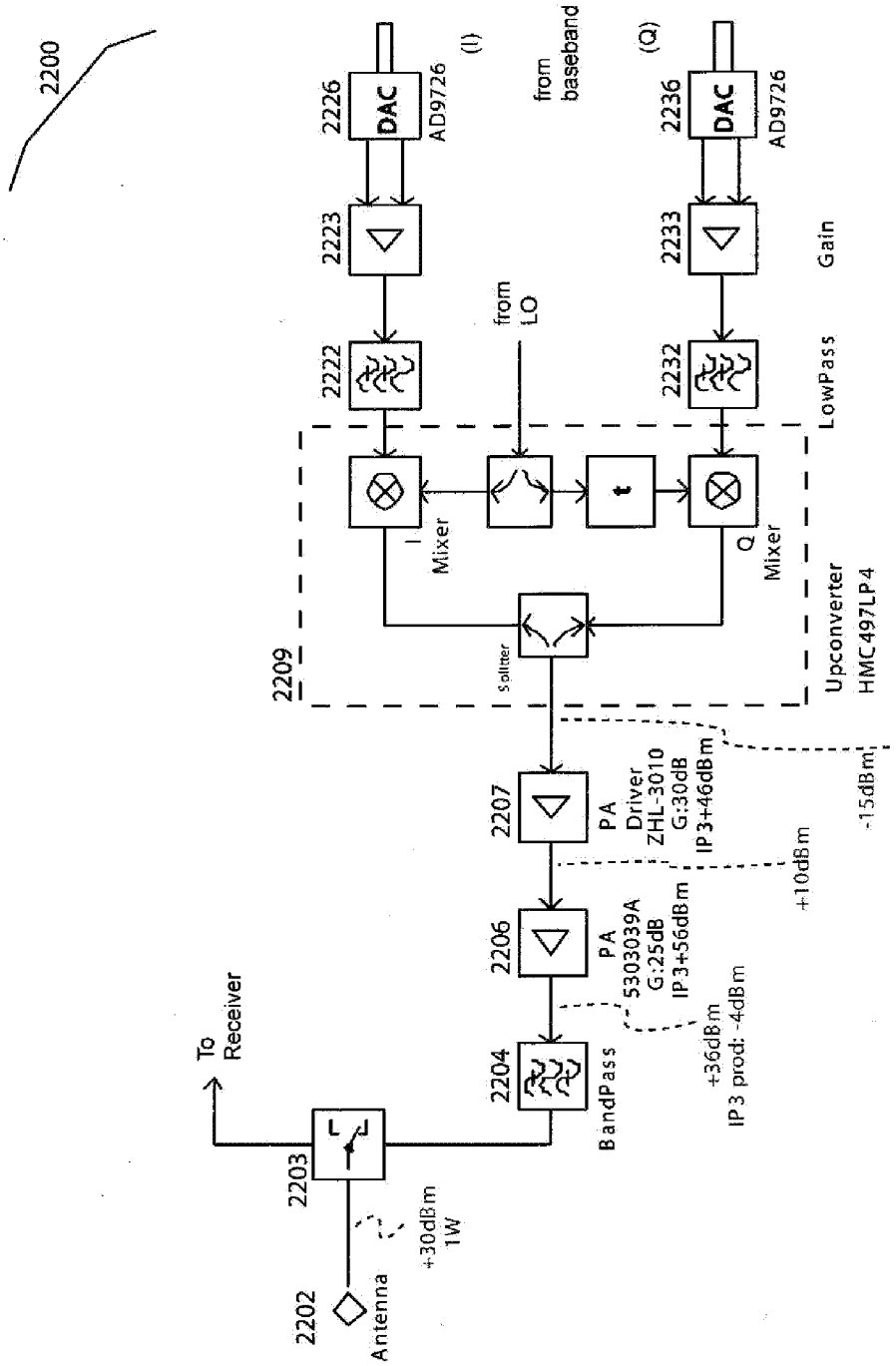
2200
2226
DAC
AD9726
(I)
from baseband
(Q)
2236
DAC
AD9726
2223
2233
Gain
from LO
2222
2232
LowPass
2209
I Mixer
Q Mixer
Splitter
Upconverter HMC497LP4
2207
PA Driver ZHL-3010 G:30dB IP3+46dBm
-15dBm
+10dBm
2206
PA 5303039A G:25dB IP3+56dBm
+36dBm IP3 prod: -4dBm
2204
BandPass
To Receiver
2203
2202
Antenna
+30dBm 1W

FIG 22

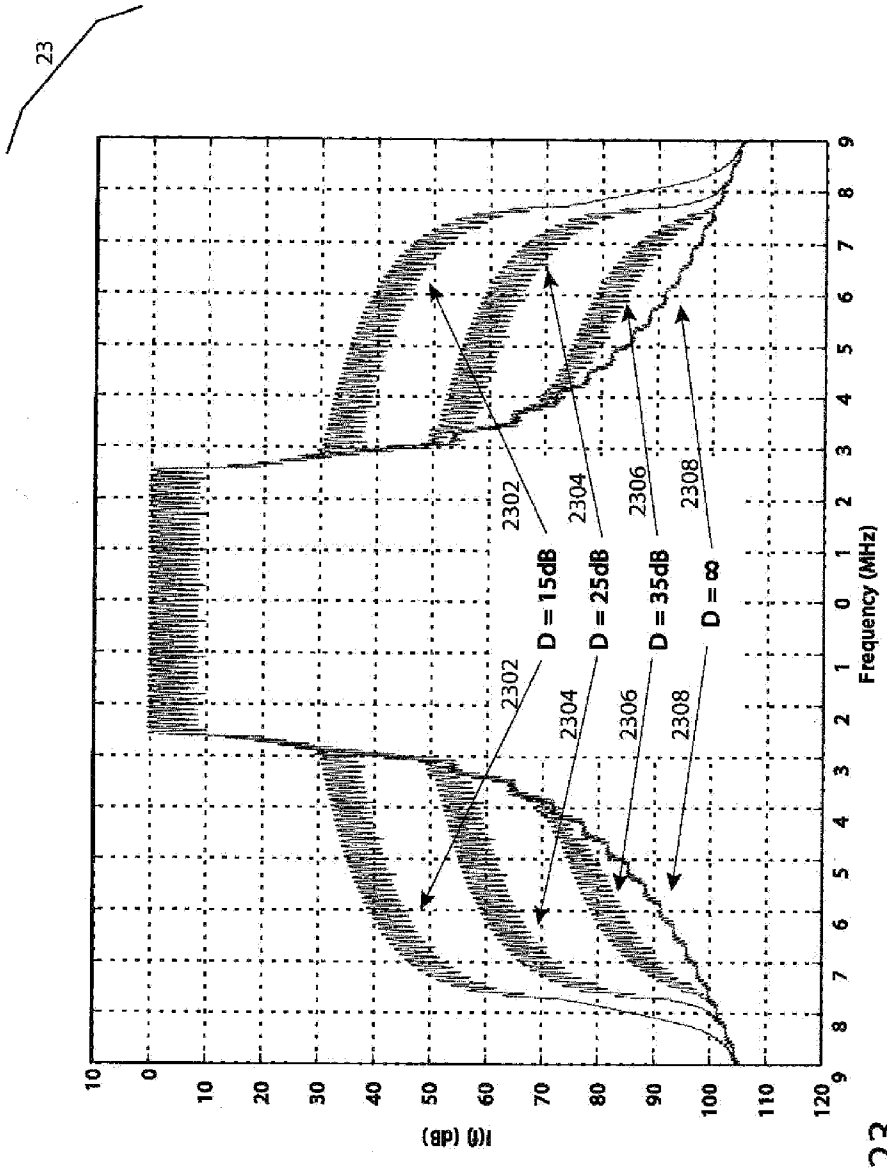
23
r(f) (dB)
10
0
10
20
30
40
50
60
70
80
90
100
110
120
9
8
7
6
5
4
3
2
1
0
1
2
3
4
5
6
7
8
9
Frequency (MHz)
D = 15dB
D = 25dB
D = 35dB
D = ∞
2302
2304
2306
2308
2302
2304
2306
2308

FIG 23

HIGH DYNAMIC RANGE TRANCEIVER FOR COGNITIVE RADIO

PRIORITY

[0001] This application is related to and claims priority under 35 U.S.C. 119(e) to U.S. Provisional Patent Application No. 60/890,801 filed on Feb. 20, 2007 entitled "SYSTEM AND METHOD FOR COGNITIVE RADIO" by Haiyun Tang the complete content of which is hereby incorporated by reference.

BACKGROUND

[0002] 1. Field of the Invention

[0003] The inventions herein described relate to systems and methods for cognitive radio.

[0004] 2. Description of the Related Art

Spectrum Utilization Problems

[0005] A recent study by the FCC Spectrum Task Force [United States' Federal Communications Commission (FCC), "Report of the spectrum efficiency working group," November 2002, http://www.fcc.gov/sptf/files/IPWGFinalReport.pdf] found that while the available spectrum becomes increasingly scarce, the assigned spectrum is significantly underutilized. This imbalance between spectrum scarcity and spectrum underutilization is especially inappropriate in this Information Age, when a significant amount of spectrum is needed to provide ubiquitous wireless broadband connectivity, which is increasingly becoming an indispensable part of everyday life.

[0006] Static spectrum allocation over time can also result in spectrum fragmentation. With lack of an overall plan, spectrum allocations in the US and other countries over the past several decades can appear to be random.

[0007] Despite some efforts to serve best interests at the time, this leads to significant spectrum fragmentation over time. The problem is exacerbated at a global level due to a lack of coordinated regional spectrum assignments. In order to operate under such spectrum conditions, a device can benefit from operational flexibility in frequency and/or band shape; such properties can help to maximally exploit local spectrum availability.

[0008] To address the above problems, an improved radio technology is needed that is capable of dynamically sensing and locating unused spectrum segments, and, communicating using these spectrum segments while essentially not causing harmful interference to designated users of the spectrum. Such a radio is generally referred to as a cognitive radio, although strictly speaking, it may perform only spectrum cognition functions and therefore can be a subtype of a broad-sense cognitive radio [J. M. III, "Cognitive radio for flexible mobile multimedia communications," *Mobile Networks and Applications,* vol. 6, September 2001.] that learns and reacts to its operating environment. Key aspects of a cognitive radio can include:

[0009] Sensing: a capability to identify used and/or unused segments of spectrum.

[0010] Flexibility: a capability to change operating frequency and/or band shape; this can be employed to fit into unused spectrum segments.

[0011] Non-interference: a capability to avoid causing harmful interference to designated users of the spectrum.

[0012] Such a cognitive radio technology can improve spectrum efficiency by dynamically exploiting underutilized spectrum, and, can operate at any geographic region without prior knowledge about local spectrum assignments. It has been an active research area recently.

FCC Spectrum Reform Initiatives

[0013] FCC has been at the forefront of promoting new spectrum sharing technologies. In April 2002, the FCC issued an amendment to Part 15 rules that allows ultra-wideband (UWB) underlay in the existing spectrum [FCC, "FCC first report and order: Revision of part 15 of the commission's rules regarding ultra-wideband transmission systems," ET Docket No. 98-153, April 2002]. In June 2002, the FCC established a Spectrum Policy Task Force (SPTF) whose study on the current spectrum usage concluded that "many portions of the radio spectrum are not in use for significant periods of time, and that spectrum use of these 'white spaces' (both temporal and geographic) can be increased significantly". SPTF recommended policy changes to facilitate "opportunistic or dynamic use of existing bands." In December 2003, FCC issued the notice of proposed rule making on "Facilitating Opportunities for Flexible, Efficient and Reliable Spectrum Use Employing Cognitive Radio Technologies" [FCC, "Facilitating opportunities for flexible, efficient, and reliable spectrum use employing cognitive radio technologies," ET Docket No. 03-108, December 2003] stating that "by initiating this proceeding, we recognize the importance of new cognitive radio technologies, which are likely to become more prevalent over the next few years and which hold tremendous promise in helping to facilitate more effective and efficient access to spectrum."

[0014] While both UWB and cognitive radio are considered as spectrum sharing technologies, their approaches to spectrum sharing are substantially different. UWB is an underlay (below noise floor) spectrum sharing technology, while cognitive radio is an overlay (above noise floor) and interlay (between primary user signals) spectrum sharing technology as shown in FIG. **1**. Through sensing combined with operational flexibility, a cognitive radio can identify and make use of spectral "white spaces" between primary user signals. Because a cognitive user signal resides in such "white spaces", high signal transmission power can be permitted as long as signal power leakage into primary user bands does not embody harmful interference.

Broadcast TV Bands.

[0015] Exemplary broadcast TV bands are shown in Graph **200** of FIG. **2**. Each TV channel is 6 MHz wide. Between 0 and 800 MHz, there are a total of 67 TV channels (Channels 2 to 69 excluding Channel 37 which is reserved for radio astronomy). The NPRM [FCC, May 2004, op. cit.] excludes certain channels for unlicensed use: Channels 2-4, which are used by TV peripheral devices, and Channels 52-69, which are considered for future auction. Among the channels remaining, Channels 5-6, 7-13, 21-36, and 38-51 are available for unlicensed use in all areas. Unlicensed use in Channels 14-20 is allowed only in areas where they are not used by public safety agencies [FCC, May 2004, op. cit.].

[0016] It can be appreciated that Channels 52-69 are currently used by TV broadcasters and it is not clear if/when they will be vacated. There is significant interference in the lower channels 5-6 and 7-13. Based on these considerations, the

spectrum segment 470-806 MHz covering TV channels 14-69 can be of particular interest.

Spectrum Opportunity in the TV Bands

[0017] Spectrum opportunity can be a direct result of incumbent system inefficiency. In TV bands, a signal from a TV tower can cover an area with a radius of tens of kilometers. TV receivers can be sensitive to interference such that TV cell planning may be very conservative to ensure there is essentially no co-channel interference. This can leave a substantial amount of "white spaces" between co-channel TV cells as illustrated in the the Map **300** of FIG. **3**. Those "white spaces" can constitute an opportunistic region for cognitive users on a particular TV channel. Each TV channel may have a differently shaped opportunistic region. The total spectrum opportunity at any location can comprise the total number of opportunistic regions covering the location. A measurement in one locality shows an average spectrum opportunity in TV channels 14-69 of about 28 channels; that can be expressed as an equivalent bandwidth of approximately 170 MHz.

BRIEF DESCRIPTION OF THE DRAWINGS

[0018] FIG. **1** graph of spectrum sharing technologies: UWB and cognitive radio
[0019] FIG. **2** graph of exemplary television channel bands
[0020] FIG. **3** map of television co-channel coverage areas and opportunistic region
[0021] FIG. **4** diagram: cognitive radio system
[0022] FIG. **5** diagram: amplification stages between antenna and ADC
[0023] FIG. **6** diagram: heterodyne receiver
[0024] FIG. **7** diagram: heterodyne transceiver
[0025] FIG. **8** diagram: wideband direct-conversion receiver
[0026] FIG. **9** graph: frequency-domain non-linear effect
[0027] FIG. **10** diagram: double-ADC receiver architecture
[0028] FIG. **11** diagram: double-ADC receiver architecture, detail
[0029] FIG. **12** graph: image problem, image rejection filter
[0030] FIG. **13** graph: solution for LO freq. with specified IF freq. 140 MHz
[0031] FIG. **14** graph: solution for LO freq. with specified IF freq. 70 MHz
[0032] FIG. **15** graph: solution for LO freq. with specified IF freq. 140 MHz and specified rejection margin
[0033] FIG. **16** graph: example SAW filter response
[0034] FIG. **17** graph: example SAW filter rejection mask
[0035] FIG. **18** graph: RF gain requirements
[0036] FIG. **19** diagram: heterodyne receiver, single-channel
[0037] FIG. **20** diagram: wideband direct-conversion transmitter
[0038] FIG. **21** graph: DTV transmission mask
[0039] FIG. **22** Diagram: wideband direct-conversion transmitter, detail
[0040] FIG. **23** graph: simulated signal spectra for specified device non-linearities.

DETAILED DESCRIPTION

[0041] FIG. **4** depicts an embodiment of a cognitive radio system in block diagram. A transceiver **401** can be coupled with and/or in communication with one or more antennae **402**. Baseband signal processing can be provided by elements of a baseband processor **403**. Elements of a baseband processor **403** can comprise a sensing processor **404**, a transmit power control element **405**, and a pre-distortion element **406**. In some embodiments a pre-distortion element **406** can be coupled with and/or in communication with a transceiver **401**. In some embodiments a transmit power control element can be coupled with and/or in communication with a transceiver **401**. In some embodiments a collective sensing element **407** can be coupled with and/or in communication with a baseband processor **403** and/or elements comprising a baseband processor.
[0042] In some embodiments transceiver **401** can comprise transceiver and/or transmitter and/or receiver mechanisms disclosed herein. In some embodiments sensing element **404** can comprise one or more sensing mechanisms as described herein. By way of example and not limitation these sensing mechanisms can include energy sensing, NTSC signal sensing, and/or ATSC signal sensing. In some embodiments a collective sensing element **407** can provide collective sensing mechanisms as described herein.
[0043] In some embodiments transmit power control **405** can support adaptive transmit power control mechanisms described herein. In some embodiments pre-distortion element **406** can provide digital pre-distortion mechanisms as described herein.
[0044] In some embodiments baseband processor **403** can support additional processing mechanisms as described herein. By way of example and not limitation these mechanisms can include filtering and/or reconstruction.

RF System Analysis

Input Signal Dynamic Range

[0045] The diagram **200** of FIG. **2** depicts an embodiment of a channel-based signal transmission scheme. Each of the channel signals in an embodiment can be considered to be independent. Hence, the total signal power over all channels considered (for example, TV Channels 14-69) can be computed as the sum of the individual signal powers of those channels.
[0046] Considering the wideband signal over all the channels in an embodiment comprising TV channels, a total signal bandwidth can be 336 MHz and an antenna thermal noise floor over the signal bandwidth can be calculated:

$$\begin{aligned} N_0^{dB} &= 10\log_{10}(kTB) \\ &= -174 + 10\log_{10}(336\times10^6) \\ &\approx -89\ \text{dBm} \end{aligned} \tag{1}$$

[0047] In some embodiments, a maximum measured signal power can be approximately −20 dBm.
[0048] For an individual TV channel in an embodiment, a thermal noise floor can be

$$n_0^{dB} = -174 + 10\log_{10}(6\times10^6) \approx 106\ \text{dBm} \tag{2}$$

[0049] In some embodiments, a maximum single-channel power can have a value of approximately −20 dBm. In an embodiment of a cognitive radio system that operates close to the noise floor, a receiver can see a channel power disparity of

$$-20-(-106+6) \approx 80\ \text{dB} \tag{3}$$

assuming a receiver noise figure of 6 dB.

Third-Order Intermodulation

[0050] In an ideal RF receive chain, all RF components can be perfectly linear and there is no distortion on the received signal after the signal has been processed by the RF receive chain. Real-world RF components—especially active RF components like amplifiers and mixers—can exhibit some degree of nonlinearity, resulting in signal distortion. Small-signal nonlinearity of a single RF component or cascaded RF components can be modeled by the following input-output relationship

$$y(t)=\alpha_0+\alpha_1 x(t)+\alpha_2 x^2(t)+\alpha_3 x^3(t)+ \tag{4}$$

where x(t) is the input signal and y(t) is the output signal and in some typical embodiments the nonlinearity can be dominated by the low-order nonlinear terms.

[0051] RF components typically operate on passband signals. For passband signals, even-order nonlinear terms can be discarded when appropriate filtering is performed on the RF chain. The small signal nonlinearity can then be approximated as:

$$y(t)\approx\alpha_1 x(t)+\alpha_3 x(t) \tag{5}$$

retaining only the lowest odd order distortion term.

[0052] When a passband signal with baseband equivalent representation $s_B(t)$ passes through an element with nonlinear transfer function (3), the baseband equivalent representation of the output signal can be expressed as

$$\underbrace{\alpha_1 s_B(t)}_{Signal}+\underbrace{\frac{3\alpha_3}{4}|s_B(t)|^2 s_B(t)}_{\text{3rd-order distortion}} \tag{6}$$

[0053] At the output, the ratio of the distortion power to the signal power, which is also the inverse of the dynamic range, can be expressed as:

$$\begin{aligned} P_{DR}^{-1} &= \frac{\left(\frac{3\alpha_3}{4}\right)^2 E[|s_B(t)|^6]}{\alpha_1^2 E[|s_B(t)|^2]} \\ &= \frac{\left(\frac{3\alpha_3}{4}\right)^2 E[|s_B(t)|^6]}{\alpha_1^2 E[|s_B(t)|^2]} \\ &= \frac{1}{\alpha_1^2}\left(\frac{3\alpha_3}{4}\right)^2 \{E[|s_B(t)|^2]\}^2\Gamma \end{aligned} \tag{7}$$

where

$$\Gamma = \frac{E[|s_B(t)|^6]}{\{E[|s_B(t)|^2]\}^3} \tag{8}$$

is a factor that depends essentially only on the signal structure of $s_B(t)$. For example, Γ is approximately 7.5 dB if $s_B(t)$ is white noise. Suppose $s_B(t)$ is a combined signal over all TV channels with power

$$P_{In}=E[|s_B(t)|^2] \tag{9}$$

[0054] The gain can be defined

$$g=\alpha_1^2 \tag{10}$$

and output signal power

$$P_{Signal}=gP_{In} \tag{11}$$

[0055] Using a two-tone IP3 relationship

$$\frac{1}{\alpha_1^2}\left(\frac{3\alpha_3}{4}\right)^2 = \frac{g^2}{P_{IP3}^2} \tag{12}$$

[0056] It can be appreciated that a third-order intercept point (IP3 or TOI) is the point at which a linear extrapolation (as a function of input power) of linear output power and third-order distortion power level meet.

[0057] Thus

$$P_{DR}^{-1} = \frac{g^2}{P_{IP3}^2}P_{In}^2\Gamma = \frac{P_{Signal}^2}{P_{IP3}^2}\Gamma \tag{13}$$

or in dB scale

$$P_{DR}^{dB} = 2P_{IP3}^{dB} - 2P_{Signal}^{dB} - \Gamma^{dB} \tag{14}$$

Since the output 3rd-order distortion power is

$$P_{IM3} = \left(\frac{3\alpha_3}{4}\right)^2 E[|s_B(t)|^6] \tag{15}$$

then, according to Equations (7) and (14)

$$\begin{aligned} P_{IM3}^{dB} &= P_{Signal}^{dB} - P_{DR}^{dB} \\ &= 3P_{Signal}^{dB} - 2P_{IP3}^{dB} + \Gamma^{dB} \end{aligned} \tag{16}$$

[0058] Note that the term Γ in Equation (16) accounts for added distortion that can result from a particular signal structure. When an input signal $s_B(t)$ is essentially a sinusoid (i.e. a single tone in frequency domain), $\Gamma^{dB}=0$.

Overview of RF Receiver Functions

[0059] The functions of a RF receiver system can comprise: a) Frequency translation and channel selection; and b) Signal amplification.

Direct RF Sampling

[0060] An RF signal can reside in a particular frequency band

$$[f_c-W, f_c+W]$$

where f_c is a carrier frequency and 2 W is a signal bandwidth. In order to retrieve information content from the signal, the signal can be digitized.

[0061] In theory, it is possible to directly sample the RF signal at a carrier frequency. Such an approach, however, can be prohibitively expensive in terms of hardware cost and power consumption. For example, if a carrier frequency is 600 MHz, direct Nyquist sampling of an associated RF signal can require a sampling frequency at least $2(f_c+W)$ or 1.2 GHz. In some embodiments an overall RF signal can contain both strong and weak signal contents, e.g. both TV signals and

cognitive radio signals. A high-resolution ADC can be advantageously specified for some such embodiments. By way of non-limiting example, for a power difference between the strong and weak signals of 70 dB, an ADC with a resolution of at least 12 bits can be specified in some typical embodiments. Such ADC requirements can present realization challenges, given that some embodiments of current commercial ADCs can run at about 1 GHz sampling frequency, with 8-bit resolution [National Semiconductor Corporation, "ADC081000 High Performance, Low Power 8-bit, 1 GSPS A/D Converter", DS200681, 2004], [Maxim Integrated Products, "MAX108 Data Sheet: ±5V, 1.5 Gsps, 8-Bit ADC with On-Chip 2.2 GHz Track/Hold Amplifier", 19-1492; Rev 1; 10/01]. Direct RF sampling embodiments may become a increasingly advantageous in the future, as ADC and related technologies evolve.

Frequency Translation and Channel Selection

[0062] The high cost of RF direct sampling can be a result of the sampling of unnecessary signal contents below f_c-W. Given an information bandwidth of 2 W, Nyquist sampling only requires a sampling frequency of 2 W in the circumstance that the signal center frequency can be shifted from the carrier frequency f_c to DC, i.e.

$$[f_c-W, f_c+W] \rightarrow [-W, W] \tag{17}$$

[0063] Such frequency translation can typically be achieved in an RF receiver through mixing. In addition to performing frequency translation, a receiver can also perform channel selection in order to acquire a signal in the desired 2 W-wide information band.

Signal Amplification

[0064] Another major function of an RF receiver can be signal amplification. Consider an 8-bit ADC receiving an input signal with peak-to-peak voltage of 600 mV [Nat'l Semi. Corp., DS200681, 2004, op. cit.]. An associated quantization step can be 2.34 mV. The quantization noise power assuming a 50-Ohm load can be expressed

$$N_q^{\mathrm{dB}} = 10\log_{10}\left[2\times\frac{(2.34\times10^{-3})^2}{12}\frac{10^3}{50}\right] \approx -47\ \mathrm{dBm} \tag{18}$$

where a factor of 2 results from considering the total quantization noise power of the in-phase (I) and quadrature (Q) ADCs in the system.

[0065] In some embodiments a received signal power level at the antenna can be small, e.g. close to the exemplary thermal noise level of −89 dBm in Equation (1). As illustrated in diagram **500** (FIG. **5**), significant amplification through multiple amplification stages along the RF chain can be provided in some embodiments to ensure that a signal has enough power to overcome a quantization noise floor when the signal reaches an ADC input. In some embodiments, a specification can be employed to ensure that quantization noise has a negligible impact on the system performance; require that at the ADC input, the total thermal noise (amplified thermal noise plus RF chain noise figure) is at least X^{dB} (e.g. 10 dB) above the quantization noise level. This specification can translate into a requirement on the total RF chain power gain g_{RF}:

$$g_{RF}^{dB} - 89\ \mathrm{dBm} + F_{RF}^{dB} \geqq -47\ \mathrm{dBm} + X^{dB} \tag{19}$$

where F_{RF} is the RF chain noise figure. Alternatively, this relationship can be expressed

$$g_{RF}^{dB} \geqq 42 - F_{RF}^{dB} + X^{dB} \tag{20}$$

[0066] As an example, consider a receiver with a noise figure of 6 dB and $X^{dB}=10$ dB. The total gain provided by the RF chain needs to be at least 46 dB according to the above equation. Accomplishing this gain can be a non-trivial task.

Receiver Architecture Choices Based on Channel Selection Considerations

[0067] Since each exemplary 6 MHz TV channel can carry dissimilar information content, in some embodiments channel selection can be employed to decode the information content of a particular channel, such as a TV channel. Channel selection can be performed at one or more of an RF stage, IF stage, analog baseband, digital baseband, and/or a combination of these stages.

RF Channel Selection:

[0068] In one design scenario, a channel selection filter can be disposed in the RF stage immediately following the antenna in order to select the desired channel. Several problems can attend this approach. First, a high quality channel selection filter can present challenges to realization at specified RF frequencies. A quality metric for a filter can be defined as approximately its 3-dB bandwidth divided by its center frequency. For a specified fixed channel width, a corresponding quality metric value increases with increasing frequency. Hence, challenges to realizing such a filter can increase with frequency. In some embodiments a receiver can be specified to select any one of 55 TV channels from an exemplary TV band. Thus in some embodiments, a tunable RF channel selection filter can be employed, thereby further exacerbating realization challenges. In some application embodiments, a capability of simultaneous decoding multiple (eg., TV) channels can be specified. In some such embodiments a complete RF chain after a RF channel selection filter could be replicated for each additional channel, and can thereby increase cost and/or complexity of a realizable embodiment.

Heterodyne Receiver:

[0069] Diagram **600** depicts a block diagram embodiment of a heterodyne receiver.

[0070] Channel selection in some embodiments of a conventional heterodyne receiver can be achieved through a combination of filtering stages along a RF (radio frequency) chain, which are herein described:

[0071] An RF filter **604**, also called a band selection filter. In some embodiments this can be an RF frequency filter connected directly to and/or coupled with an antenna **602**. An RF filter **604** can select a frequency band of interest, such as an entire exemplary TV band, and can reject signals outside the frequency band of interest, e.g. 900 MHz cellular signals.

[0072] An Image rejection (IR) filter **612**. In some embodiments this filter can be disposed prior to a RF mixer **614** in order to reject one or more image signals. In some embodiments an image signal can otherwise fold into a desired signal band after mixing [B. Razavi, *RF Microelectronics*. Pearson-Prentice Hall, 1998].

[0073] An IF filter **616**, also called a channel selection filter. In some embodiments this filter can be primarily responsible for channel selection. In some embodiments an IF filter **616**

can be realized as a standalone component, e.g. a surface acoustic wave (SAW) filter [C. Marshall and et al., "2.7v GSM transceiver ICs with on-chip filtering," *ISSCC Digest of Technical Papers,* pp. 148-149, February 1995].

[0074] One or more baseband filters **624 634**, also called anti-aliasing filters. A baseband filter can be disposed prior to an analog to digital converter (ADC) in order to reject alias signals that can result from sampling. Diagram **600** depicts baseband filter **624** employed in combination with ADC **628**, and baseband filter **634** employed in combination with ADC **638**, corresponding respectively to I and Q signal paths of a receiver embodiment.

[0075] In some embodiments, with the exception of a band selection (RF) filter **604**, each of the filters just described can provide a degree of channel selection. In some embodiments a channel selection (IF) filter **616** can be capable of providing the largest contribution to selectivity. In some embodiments a heterodyne receiver architecture can be relatively complex and/or costly if multiple channels are to be decoded simultaneously. In some embodiments, an RF chain comprising the elements after the IR filter can be replicated for each additional channel in order to support simultaneous decoding of multiple channels.

[0076] RF filter **604** can receive a signal from antenna **602**. RF filter **604** can provide a filtering function to a received signal. Low noise amplifier LNA **610** can be coupled with and receive a filtered signal from RF filter **601**.

[0077] LNA **610** can provide a gain function with low noise to a received signal. IR filter **612** can be coupled with and receive a gain-modified signal from LNA **610**. IR filter **612** can provide a filtering function to a received signal. Oscillator LO_1 **608** can provide a signal that can be a tone signal at a specified frequency. RF mixer **614** can be coupled with and receive a filtered signal from IR filter **612**. RF mixer **614** can be coupled with and receive a signal that can be a tone signal at a specified frequency from oscillator LO_1 **608**. RF mixer **614** can provide a mixing function, providing a signal responsive to a combination of a signal received from IR filter **612** and a signal received from oscillator LO_1 **608**. IF filter **616** can be coupled with and receive a signal from RF mixer **614**. IF filter **616** can provide a filtering function to a received signal. IF amp **618** can be coupled with and receive a filtered signal from IF filter **616**. IF amp **618** can provide a gain function to a received signal.

[0078] Oscillator LO_2 **609** can provide a signal that can be a tone signal at a specified frequency. Quad splitter **623** can provide a quadrature splitting function to a received signal, thereby providing an in-phase (I) and a quadrature (Q) signal. Quad splitter **623** can be coupled with and receive a signal from Oscillator LO_2 **609**. IF mixer **622** can be coupled with and receive a signal of a first specified phase from Quad splitter **623**. IF mixer **622** can be coupled with and receive a gain-modified signal from IF amp **618**. IF mixer **622** can provide a mixing function, providing a signal responsive to a signal received from Quad splitter **623** and responsive to a signal received from IF amp **618**. Similarly, IF mixer **632** can provide a mixing function, providing a signal responsive to a signal of a second specified phase received from Quad splitter **623** and responsive to a signal received from IF amp **618**. Each of the baseband filters **624 634** can provide a filtering function to a corresponding received signal. Baseband filter **624** can be coupled with and receive a signal from IF mixer **622**. Baseband filter **634** can be coupled with and receive a signal from IF mixer **632**. Each of the variable gain amplifiers (VGA) **626 636** can provide a variable gain to a corresponding received signal. VGA **626** can be coupled with and receive a filtered signal from baseband filter **624**. VGA **636** can be coupled with and receive a filtered signal from baseband filter **634**.

[0079] Each of the analog to digital converters (ADC) **628 628** can provide an analog to digital conversion function to a corresponding received analog signal. ADC **628** can be coupled with and receive a gain-modified signal from VGA **626**. ADC **638** can be coupled with and receive a gain-modified signal from VGA **636**. ADC **628** can provide a baseband digital output signal corresponding to the first specified phase (I). ADC **638** can provide a baseband digital output signal corresponding to the second specified phase (Q).

[0080] It can be appreciated that in alternative embodiments of a heterodyne receiver **600** and in other receiver and transmitter embodiments herein described, various gain elements can be omitted and/or their functions realized by any known and/or convenient method of providing signal gain.

Heterodyne Transceiver:

[0081] Diagram **700** depicts a block diagram embodiment of a heterodyne transceiver. An upper portion of diagram **700** corresponds directly to the heterodyne receiver **600** discussed herein. It can be appreciated that upon coupling antenna **702** to the receiver architecture through switch **706**, there can be essentially a one-to-one correspondence between elements of the receiver **600** and elements of the receiver portion of the transceiver diagram **700**.

[0082] The signal chain and function of the elements therein correspond directly and respectively between [Antenna **602**, RF filter **604**, LO_1 **608**, LO_2 **609**, LNA **610**, IR filter **612**, RF mixer **614**, IF filter **616**, IF amp **618**, IF mixer **622**, Quad splitter **623**, Baseband filter **624**, VGA **626**, ADC **628**, IF mixer **632**, Baseband filter **634**, VGA **636**, ADC **638**] and [Antenna **702**, RF filter **704**, LO_1 **708**, LO_2 **709**, LNA **710**, IR filter **712**, RF mixer **714**, IF filter **716**, IF amp **718**, IF mixer **722**, Quad splitter **723**, Baseband filter **724**, VGA **726**, ADC **728**, IF mixer **732**, Baseband filter **734**, VGA **736**, ADC **738**].

[0083] The receiver portion of diagram **700** further comprises a Splitter **720** that couples elements with each other: IF amp **718**, IF mixer **722**, and IF mixer **732**. Corresponding elements IF amp **618**, IF mixer **622**, and IF mixer **632** can be similarly coupled in the embodiment of diagram **600**.

[0084] In some embodiments the transmitter portion of diagram **700** can be advantageously realized using design analysis and/or frequencies and/or element specifications and/or particular elements in common with the receiver portion. In some embodiments elements RF filter **704**, LO_1 **708**, and LO_2 **709** can be used in common.

[0085] In some embodiments, elements of the transmitter [IR filter **712**, RF mixer **714**, IF filter **716**, IF amp **718**, Splitter **720**, IF mixer **722**, Quad splitter **723**, Baseband filter **724**, VGA **726**, IF mixer **732**, Baseband filter **734**, VGA **736**] can be substantially similar to the corresponding and respective elements of the receiver [IR filter **762**, RF mixer **764**, IF filter **766**, IF amp **768**, Splitter **770**, IF mixer **772**, Quad splitter **773**, Baseband filter **774**, VGA **776**, IF mixer **782**, Baseband filter **784**, VGA **786**].

[0086] Each of the digital to analog converters DAC **778 788** can provide a digital to analog conversion function to a corresponding received digital signal, thereby providing corresponding converted corresponding analog signals. Base-

band filters **774** **784** can each provide a filter function to a corresponding received signal. Baseband filter **774** can be coupled with and receive an analog signal from DAC **778**. Baseband filter **784** can be coupled with and receive an analog signal form DAC **788**.

[0087] Oscillator LO_2 **709** can provide a signal that can be a tone signal at a specified frequency. Quad splitter **773** can provide a quadrature splitting function to a received signal, thereby providing an in-phase (I) and a quadrature (Q) signal. Quad splitter **773** can be coupled with and receive a signal from Oscillator LO_2 **709**. IF mixer **772** can be coupled with and receive a signal of a first specified phase from Quad splitter **773**. IF mixer **772** can be coupled with and receive a filtered signal from baseband filter **774**. IF mixer **772** can provide a mixing function, providing a signal responsive to a signal received from Quad splitter **773** and responsive to a signal received from Baseband filter **774**. Similarly, IF mixer **782** can provide a mixing function, providing a signal responsive to a signal of a second specified phase received from Quad splitter **773** and responsive to a signal received from Baseband filter **784**.

[0088] Combiner **770** can provide a combining function, providing a signal responsive to the combination of two received signals. Combiner **770** can be coupled with and receive a signal corresponding to a first specified phase from IF mixer **772**. Combiner **770** can be coupled with and receive a signal corresponding to a second specified phase from IF mixer **782**. IF amp **778** can provide a gain function to a received signal. IF amp can be coupled with and receive a combined signal from Combiner **770**. IF filter can provide a filter function to a received signal. IF filter can be coupled with and receive a gain-modified signal from IF amp **778**.

[0089] LO_1 **708** can provide a signal that can be a tone signal at a specified frequency. RF mixer **764** can be coupled with and receive a filtered signal from IF filter **766**. RF mixer **764** can be coupled with and receive a signal that can be a tone signal at a specified frequency from LO_1 **708**. RF mixer **764** can provide a mixing function, providing a signal responsive to a combination of a signal received from IF filter **766** and a signal received from LO_1 **708**. IR filter **762** can provide a filter function to a received signal. IR filter **762** can be coupled with and receive a mixed signal from RF mixer **764**. PA **760** can provide a power amplification function to a received signal. PA **760** can be coupled with and receive a filtered signal from IR filter **762**. RF filter **704** can provide a filter function to a received signal. RF filter can be coupled with and receive a signal from PA **760** via Switch **706**. Switch **706** can selectably couple PA **760** with RF filter **704**. Antenna **702** can provide an antenna transmission function to a power amplified signal received from PA **760**.

Wideband Direct-Conversion Receiver:

[0090] From the above discussion, it can be appreciated that as long as the channel selection starts from a particular RF stage, in some embodiments the RF chain from that stage onward can be replicated for each additional channel. In some embodiments it can be advantageous to defer channel selection all the way until the digital baseband. Such an embodiment can comprise a receiver that is capable of simultaneously decoding all of the channels in one or more specified bands, such as all of the TV channels in depicted in the graph **200**. Two issues can be addressed in such a system.

[0091] First, there can be a need to have fast and high-resolution sampling, because an ADC in such an embodiment sees an entire band of interest, such as a TV band (Channels 14-69) with 336 MHz of bandwidth.

[0092] Second, because before channel selection, the overall signal consists of the signals from all the channels, some of which can be strong while some of which can be weak, RF component nonlinearities can cause signal intermodulations between one or more channels and thus degrade system performance for the weak channels. Linearity requirements on RF components constituting embodiments of such an architecture can thus be relatively stringent, especially on components disposed near to the ADC because such components can be specified to operate on relatively high power signals and/or amplified input signals.

[0093] Current technology trends of digital scaling along with advances in high-speed ADCs can favor such an approach. An RF system design for embodiments of such a wideband direct-conversion receiver is herein described; diagram **800** depicts an embodiment. Such an architecture may be considered wideband because the RF receiver can operate on an entire band of interest, such as an entire TV band of 336 MHz bandwidth. In some embodiments, a system comprises a direct-conversion architecture wherein an RF signal can be directly down-converted to a baseband.

[0094] RF filter **804** can receive a signal from antenna **802**. RF filter **804** can provide a filtering function to a received signal. Low noise amplifier LNA **806** can be coupled with and receive a filtered signal from RF filter **804**. LNA **806** can provide a gain function with low noise to a received signal.

[0095] Oscillator LO **810** can provide a signal that can be a tone signal at a specified frequency. Quad splitter **808** can provide a quadrature splitting function to a received signal, thereby providing an in-phase (I) and a quadrature (Q) signal. Quad splitter **808** can be coupled with and receive a signal from LO **810**. Mixer **820** can be coupled with and receive a signal of a first specified phase from Quad splitter **808**. Mixer **820** can be coupled with and receive a gain-modified signal from LNA **806** . Mixer **820** can provide a mixing function, providing a signal responsive to a signal received from Quad splitter **808** and responsive to a signal received from LNA **806**. Similarly, Mixer **830** can provide a mixing function, providing a signal responsive to a signal of a second specified phase received from Quad splitter **808** and responsive to a signal received from LNA **806**. Each of the Baseband filters **822** **832** can provide a filtering function to a corresponding received signal.

[0096] Baseband filter **822** can be coupled with and receive a signal from Mixer **820**. Baseband filter **830** can be coupled with and receive a signal from Mixer **830**. Each of the variable gain amplifiers (VGA) **824** **834** can provide a variable gain to a corresponding received signal. VGA **824** can be coupled with and receive a filtered signal from Baseband filter **822**. VGA **834** can be coupled with and receive a filtered signal from baseband filter **832**.

[0097] Each of the analog to digital converters (ADC) **826** **836** can provide an analog to digital conversion function to a corresponding received analog signal. ADC **826** can be coupled with and receive a gain-modified signal from VGA **824**. ADC **638** can be coupled with and receive a gain-modified signal from VGA **834**. ADC **826** can provide a baseband digital output signal corresponding to the first specified phase

(I). ADC **836** can provide a baseband digital output signal corresponding to the second specified phase (Q).

Receiver Chain Frequency Planning

System Frequency Planning:

[0098] Referring to the TV band diagram **200** in FIG. **2**, consider a wideband direct-conversion receiver over the frequency range from 470 MHz to 806 MHz that can span TV channels 14-69. Since Channel 37 (608-614 MHz) is not used, the center frequency of Channel 37 can be employed as a direct-conversion carrier frequency, i.e.

$$f_c = 611 \text{ MHz} \tag{21}$$

[0099] A Nyquist bandwidth can be specified of

$$2\text{ W} = 400 \text{ MHz} \tag{22}$$

covering the RF signal frequencies from 411 MHz to 811 MHz. A number of alternative ADCs with 400 MHz sampling frequency and above can be used in an embodiment [National Semiconductor Corporation, ADC081000, 2004 op. cit.], [Maxim Integrated Products, MAX108, 10/01, op. cit.], [Analog Devices, Inc. "AD12401 Data Sheet, Rev A.", D05649-0-4/06(A), May 2006].

Frequency-Domain Effect of Second-Order Nonlinearity:

[0100] Referring to a signal path of the receiver block diagram **800**: prior to the quadrature mixing stage comprising Mixer elements **820 830**, there can typically be a plurality of amplification stages, e.g. low noise amplifier (LNA) and/or amplification within the mixers. In some embodiments, device nonlinearities in such amplification stages can cause spectral contamination. In order to ensure that frequency planning is adequate in the presence of such spectral contamination, consider an RF signal

$$s_c(t) = r(t)\cos[2\pi f_c t + \theta(t)] \tag{23}$$

corresponding to a baseband signal

$$s_B(t) = r(t)e^{j\theta(t)} \tag{24}$$

which is spectrally limited to [−W,W]. Taking into account device nonlinearity, the signal after the amplification stages can be expressed as

$$y(t) \approx \alpha_0 + \alpha_1 r(t)\cos[2\pi f_c t + \theta(t)] + \alpha_2 r^2(t)\cos^2[2\pi f_c t + \theta(t)] + \alpha_3 r^3(t)\cos^3[2\pi f_c t + \theta(t)] \tag{25}$$

where under the small-signal condition, only the second-order and third-order nonlinearities are retained. Third-order nonlinearity is neglected since in-band third-order interference is inevitable. However, to insure against in-band second-order interference, consider the second-order nonlinearity term

$$\alpha_2 r^2(t)\cos^2[2\pi f_c t + \theta(t)] = \alpha_2 r^2(t)\frac{1}{4}\{e^{j[2\pi f_c t + \theta(t)]} + e^{-j[2\pi f_c t + \theta(t)]}\}^2 = \frac{\alpha_2}{4}\left\{\underbrace{[s_B(t)]^2 e^{j2\pi(2f_c)t}}_{Center=2f_c} + \underbrace{[s_B^*(t)]^2 e^{j2\pi(-2f_c)t}}_{Center=-2f_c} + ce2|s_B(t)|^2_{Center=DC}\right\} \tag{26}$$

[0101] Consider Fourier transform pairs

$$s_B(t)\cdot s_B(t) \leftrightarrows S_B(f) \otimes S_B(f)$$

$$s_B^*(t)\cdot s_B^*(t) \leftrightarrows S_B^*(-f) \otimes S_B^*(-f)$$

$$s_B(t)\cdot s_B^*(t) \leftrightarrows S_B(f) \otimes S_B^*(-f) \tag{27}$$

and since $S_B(f)$ is spectrally limited to [−W,W], all the above signal products (in the immediately preceding equations) can be spectrally limited to [−2 W,2 W]. The graph **900** of FIG. **9** illustrates the above nonlinear effect. It is clear from the illustration that as long as a carrier frequency f_c satisfies

$$f_c \geqq 3\text{ W} \tag{28}$$

a signal can be essentially free of second-order in-band interference. In some embodiments this condition can be satisfied by frequency planning, i.e.

$$611 \text{ MHz} = f_c > 3\text{ W} = 600 \text{ MHz} \tag{29}$$

Other Issues with Direct-Conversion Architecture:

[0102] Although some embodiments of a direct-conversion architecture do not suffer an image problem as can some embodiments of a heterodyne architecture, there can remain a number of challenges to a practical implementation [B. Razavi, op. cit.]. In some embodiments, LO self-mixing can create a DC offset. In some embodiments, analog baseband circuitry can add considerable flicker noise—also called 1/f noise, since noise power can be proportional to 1/f. In some embodiments I/Q mismatch can occur if the I and Q signal paths are not precisely balanced. Challenges of DC offset and flicker noise—which can prominent around DC—can be addressed in some embodiments of an improved receiver architecture by using an empty 6 MHz signal channel, such as Channel 37 of an exemplary TV band, at DC. In some embodiments, I/Q mismatch can be compensated through digital calibration techniques.

Receiver Chain Gain Planning

[0103] In light of frequency planning as discussed above, an ADC can be selected for an improved receiver embodiment. Consider using National Semiconductor's ADC 081000, an 8-bit 1 GHz ADC [Nat'l Semi. Corp., DS200681, 2004, op. cit.], as previously mentioned. A receiver chain amplification calculation can be as discussed herein regards Signal Amplification, and employed for each 6 MHz TV channel. Assuming ADC operation at a 800 MHz sampling frequency, a quantization noise per TV channel can be expressed

$$n_q^{dB} = N_q^{dB} - 10\log_{10}(800/6) \approx -68 \text{ dBm} \tag{30}$$

where N_q is quantization noise power as calculated in Equation (18). In order to scale noise contributions, RF chain gain g_{RF} can be specified such that thermal noise exceeds the quantization noise at the ADC. In other words,

$$n_0^{dB} + F_{RF}^{dB} + g_{RF}^{dB} \geqq n_q^{dB} + X^{dB} \tag{31}$$

Again a noise figure can be specified $F_{RF}^{dB} = 6$ dB and a margin $X^{dB} = 10$ dB so that

$$g_{RF}^{dB} \geqq n_q^{dB} + 4 - n_0^{dB} = 42 \text{ dB} \tag{32}$$

[0104] An ADC can be operating at twice a specified sampling rate of 400 MHz; this can account for the discrepancy between the result shown here and that in discussion regards Signal Amplification.

[0105] In some embodiments a receiver chain can provides 42 dB of amplification as just described. When operating with

a maximum received signal power of −20 dBm, an amplified signal at an ADC can have a power level of

$$P_{Signal}=22\text{ dBm} \tag{33}$$

Amplified thermal noise at the ADC can have a power level of −89+42+6=−41 dBm. In order to have third order intermodulation (IM3) power remain below thermal noise power, according to Equation (16), a required condition can be

$$\begin{aligned} &3P_{Signal}^{\text{dB}} - 2P_{IP3}^{\text{dB}} + \Gamma^{\text{dB}} = \\ &P_{IM3} < -41 \Rightarrow P_{IP3}^{\text{dB}} > \frac{1}{2}(3P_{Signal}^{\text{dB}} + \Gamma^{\text{dB}} + 41) \Rightarrow \\ &P_{IP3}^{\text{dB}} > \frac{1}{2}(3\times 22 + 0 + 41) \Rightarrow P_{IP3}^{\text{dB}} > 53.5\text{ dBm} \end{aligned} \tag{34}$$

where for simplicity, it can be assumed that $\Gamma^{dB}=0$. Such a high IP3 can be difficult to realize in an embodiment.

[0106] Another potentially complicating design consideration can be that a specified ADC has an input digitizing range of input (maximum) peak-to-peak 0.6V. A maximum input signal power for the I and Q ADCs can be computed as

$$10\log_{10}\left(2\times\frac{0.3^2}{50}\times 10^3\right) = 5.6\text{ dBm}, \tag{35}$$

far smaller than the amplified signal power of 22 dBm.

A Novel Double-ADC Receiver Architecture

[0107] Diagram **1100** depicts an embodiment in some detail comprising the double-ADC architecture of diagram **1000**, and that can address some issues discussed herein; particularly challenges to realization of an embodiment. Some notable blocks are represented in diagram **1000**. An Amplification Stage **1 1004** can comprise an LNA and/or optional additional amplifications. In one embodiment the total gain provided by this stage can be 15 dB (after 1-to-2 splitting) and a receiver chain noise figure up to this point can be 5 dB. Given an exemplary maximum receiver input signal power of −20 dBm, signal power at the output of this amplification stage can be −5 dBm.

[0108] Thermal noise power at the output of this amplification stage can be −89+15+5=−69 dBm. In order to maintain an IM3 power below the thermal noise floor, a specified IP3 of Amplification Stage **1** must be larger than −5+−5−(−69)/2=27 dBm. In some embodiments, a maximum component-wise IP3 in this amplification stage can be somewhat higher than 27 dBm in order to take into account losses through passive components, e.g. splitters and filters, in the stage.

[0109] A signal arriving at analog to digital converter ADC**1 1006** can be representative of an input signal received by antenna **1002**. A representative input signal can be expressed as

$$y(t) = \sum_{k\in\Omega} x_k(t)e^{j2\pi f_k t} + n(t) \tag{36}$$

where $x_k(t)$ and f_k are the baseband signal and frequency of a kth channel respectively. The signal after ADC**1 1006** sampling can be expressed as

$$\begin{aligned} y'(t) &= \sum_{k\in\Omega} x_k(t)e^{j2\pi f_k t} + n(t) + q(t) \\ &= \sum_{k\in\Omega} [x_k(t) + n_k(t) + q_k(t)]e^{j2\pi f_k t} \\ &\approx \sum_{k\in\Omega} [x_k(t) + q_k(t)]e^{j2\pi f_k t} \end{aligned} \tag{37}$$

where q(t) is quantization noise; $n_k(t)$ and $q_k(t)$ are baseband equivalent thermal noise and quantization noise on Channel k; and in the approximation, thermal noise can be ignored because thermal noise power per channel can be approximately −106+15+5=−86 dBm; this can be far smaller than quantization noise power per channel, i.e. −68 dBm. The maximum input signal power to ADC**1 1006**, i.e. EØ|y(t)|^2], can be approximately −20+15=−5 dBm, which can be smaller than a maximum allowable ADC input signal power of 5.6 dBm.

[0110] In a baseband, digital filtering can be performed (by Digital Filtering element **1008**) to select one or more specified channels. After filtering, a subset of the selected channels can be selected $\Lambda\subseteq\Omega$ whose SNRs exceed 25 dB. Element Digital Filtering **1008** can be adapted to provide this capability. A signal corresponding to the selected set of channels can be expressed as

$$y_\Lambda(t) = \sum_{k\in\Lambda} [x_k(t) + q_k(t)]e^{j2\pi f_k t} \tag{38}$$

[0111] A signal $y_\Lambda(t)$ can be shown as $y_H(t)$ in some figures herein; the "H" subscript indicating correspondence to relatively high power channels of an input signal. Two operations can be employed with this set of channels. First, this set of channels can be sent to a digital baseband processing unit **1020** for decoding, since they have adequate SNRs. Second, an analog waveform can be reconstructed corresponding to the signal $y_\Lambda(t)$ using a DAC **1010**. A reconstructed analog waveform can be expressed as

$$y_\Lambda(t) = \sum_{k\in\Lambda} [x_k(t) + q_k(t)]e^{j2\pi f_k t} + p(t) \tag{39}$$

where p(t) is quantization noise from the DAC **1010**.

[0112] Subtracting a reconstructed waveform $y_\Lambda(t)$ from an original signal y(t) can yield:

$$y(t) - y_\Lambda(t) = \sum_{k\in(\Omega-\Lambda)} x_k(t)e^{j2\pi f_k(t)} - \sum_{k\in\Lambda} q_k(t)e^{j2\pi f_k(t)} - p(t) + n(t) \tag{40}$$

and is depicted as a signal comprising $y_L(t)$ that can be provided by summing node **1012** in FIG. **10**, wherein $y_L(t)$ corresponds to relatively low power channels of an input signal.

[0113] Since the remaining channels belong to a set Ω-Λ, and these channels can have signal powers less than 25 dB above the an exemplary per channel quantization noise floor of −68 dBm, a maximum signal power per channel can be −68+25=−43 dBm. In an exemplary worst case, all of the

channels can have signal powers at −43 dBm and Ω-Λ can comprise an exemplary complete set of 55 TV channels. A worst-case power of the signal $y(t)-y_A(t)$ then can be:

$$-43+10\log_{10}(55)\approx-25\text{ dBm} \tag{41}$$

[0114] In order to provide a total RF chain amplification of 42 dB with the first-stage amplification already providing 15 dB gain, the second-stage amplification **1014** can be required to provide an additional 27 dB gain. In the above worst case example, a signal power at input of ADC**2 1016** (after second-stage amplification **1014**) can be 2 dBm. Amplified thermal noise power at input of ADC**2 1016** can be −89+42+6=−41 dBm. To maintain an IM3 below the thermal noise floor, an IP3 of

$$2+\frac{2-(-41)}{2}=23.5\text{ dBm}$$

for second amplification stage **1014** can be specified.

[0115] The summing node **1012** can provide a signal comprising specified relatively low-power bands and/or channels of a representative input signal but also comprising uncanceled residual signal attributed to specified relatively high-power bands and/or channels. Digital filtering **1018** can be adapted to substantially remove undesirable energy corresponding to specified bands and/or channels such as high-power channels corresponding to signal $y_H(t)$. Digital filtering **1018** can provide an advantageously filtered signal to digital baseband processing **1020**. In some embodiments digital baseband processing **1020** can further process and/or decode such an advantageously filtered signal and can provide one or more individual channel signals corresponding to $y_L(t)$.

[0116] In order to prevent significant noise figure degradation, quantization noise p(t) added by DAC **1010** can be kept small in comparison to thermal noise n(t) in Equation (40). An exemplary DAC can provide up to 16-bit resolution at 500 MHz with an output peak-to-peak voltage swing of 1V. Examples of such DACs include Analog Devices AD9726 [Analog Devices, Inc., "AD9726 Data Sheet, Rev A", D04540-0-11/05(A), November 2005] and Maxim MAX5888 [Maxim Integrated Products, "MAX5888 Data Sheet: 3.3V, 16-Bit, 500 Msps High Dynamic Performance DAC with Differential LVDS Inputs", 19-2726; Rev 3; 12/03]. A quantization noise power for a 15-bit DAC can be expressed

$$E[|p(t)|^2]=10\log_{10}\left[2\times\frac{(1/2^{15})^2}{12}\frac{10^3}{50}\right]\approx-85\text{ dBm}, \tag{42}$$

which is less than a specified thermal noise floor of −89+15+5=−69 dBm.

[0117] Diagram **1100** shows in some detail a RF block diagram of an example direct-conversion double-ADC receiver. Many suitable components for an exemplary embodiment are identified herein, by way of non-limiting example.

[0118] The system of diagram **1100** comprises individual processing elements well known in the art and/or described herein. Each of these elements is generally identified herein with a name and/or abbreviation that corresponds to its well known and/or herein described function. Analog filters comprise BandPass **1108**, LowPass**1 1124 1174**, and ReConstruction **1130 1180**. Digital filtering and/or other specified digital signal processing comprises Digital Filtering **1127 1177**. Gain modifying elements comprise low noise amplifiers LNA**1 1106** and LNA**2 1110**, automatic gain control AGC**1 1122 1172** and AGC**2 1134 1184**. Analog to digital converters comprise AD **1126 1176 1136 1186**. Digital to analog converters comprise DA **1128 1178**.

[0119] Splitters comprise elements **1112** and **1116**. Mixers comprise elements **1120** and **1170**. Summing nodes comprise elements **1132** and **1182**. Delay compensation elements comprise Delay Comp. **1125 1175**.

[0120] Delay elements comprise Phase Shift **1118**.

[0121] LNA**1 1106** can be selectably coupled with Antenna **1102** via switch **1104**. When so coupled, LNA**1 1106** can receive a signal from Antenna **1102**. BandPass **1108** can be coupled with and receive a signal from LNA**1 1106**. LNA**2** can be coupled with and receive a signal from BandPass **1108**.

[0122] Splitter **1112** can be coupled with and receive a signal from LNA**2 1110**. Mixer **1120** can be coupled with and receive a signal from Splitter **1112**. Mixer **1120** can be coupled with and receive a signal from Splitter **1116**.

[0123] Mixer **1170** can be coupled with and receive a signal from Splitter **1112**. Mixer **1170** can be coupled with and receive a signal from PhaseShift **1118**. PhaseShift **1118** can be coupled with and receive a signal from Splitter **1116**. Splitter **1116** can be coupled with and receive a signal from an oscillator LO **1114**.

[0124] AGC**1 1122** can be coupled with and receive a signal from Mixer **1120**.

[0125] LowPass**1 1124** can be coupled with and receive a signal from AGC**1 1122**.

[0126] Delay Comp. **1125** can be coupled with and receive a signal from LowPass**1 1124**.

[0127] Summing node **1132** can be coupled with and receive a signal from Delay Comp. **1125**.

[0128] AD **1126** can be coupled with and receive a signal from LowPass**1 1124**.

[0129] Digital Filtering **1127** can be coupled with and receive a signal from AD **1126**.

[0130] DA **1128** can be coupled with and receive a signal from Digital Filtering **1127**.

[0131] ReConstruction **1130** can be coupled with and receive a signal from DA **1128**.

[0132] Summing node **1132** can be coupled with and receive a signal from ReConstruction **1130**.

[0133] AGC**2 1134** can be coupled with and receive a signal from Summing node **1132**.

[0134] AD **1136** can be coupled with and receive a signal from AGC**2 1134**.

[0135] AD **1136** can provide a baseband in-phase component signal.

[0136] AGC**1 1172** can be coupled with and receive a signal from Mixer **1170**.

[0137] LowPass**1 1174** can be coupled with and receive a signal from AGC**1 1172**.

[0138] Delay Comp. **1175** can be coupled with and receive a signal from LowPass**1 1174**.

[0139] Summing node **1182** can be coupled with and receive a signal from Delay Comp. **1175**.

[0140] AD **1176** can be coupled with and receive a signal from LowPass**1 1174**.

[0141] Digital Filtering **1177** can be coupled with and receive a signal from AD **1176**.

[0142] DA **1178** can be coupled with and receive a signal from Digital Filtering **1177**.

[0143] ReConstruction **1180** can be coupled with and receive a signal from DA **1178**.

[0144] Summing node **1182** can be coupled with and receive a signal from ReConstruction **1180**.

[0145] AGC**2 1184** can be coupled with and receive a signal from Summing node **1182**.

[0146] AD **1186** can be coupled with and receive a signal from AGC**2 1184**.

[0147] AD **1186** can provide a baseband quadrature component signal.

[0148] Exemplary digital-analog conversion devices can be specified: National Semiconductor's ADC081000 [Nat'l Semi. Corp., DS200681, 2004, op. cit.], an 8-bit 1 GHz ADC, and Analog Devices' AD9726 [Analog Devices, Inc., D04540-0-11/05(A), November 2005, op. cit.], a 16-bit 600 MHz DAC. As shown in Diagram **1100**, a first amplification stage comprises LNAs, bandpass filters, splitters, mixers, variable gain amplifiers, and lowpass filters, with a total gain of 15 dB and a noise figure of approximately 5 dB. Exemplary system components and a cascaded gain analysis are shown in the following table.

[0149]]Note that because of losses due to the passive components, e.g. splitters and filters, in some embodiments one or more amplifiers can be needed in a first amplification stage. In some embodiments a second amplification stage can consist of variable gain amplifiers. An IP3 calculation for a second amplification stage can assume a maximum input signal power of −25 dBm, as discussed herein.

Name	Vendor: Part	NF (dB)	Output NF (dB)	Gain (dB)	Max. output power (dBm)	IP3 (dBm)	DR (dB)
LNA1	Mini-Circuits: HELA-10B	3.5	3.5	12	−8	47	110
Bandpass	TBD	3	3.6	−3	−11	∞	∞
LNA2	Mini-Circuits: HELA-10B	3.5	3.9	12	1	47	92
Splitter	Mini-Circuits: ZFSC-2-2	4	3.9	−4	−3	∞	∞
Mixer	Mini-Circuits: ZFY-2	8	4.1	−8	−11	30	82
AGC1	Linear Tech: LT5514	7	4.9	14	3	47	88
Lowpass1	TBD	8	4.9	−8	−5	∞	∞
AGC2	Linear Tech: LT5514	7	5.1	27	2	47	90

[0150] The above discussions and analysis show a wideband direct-conversion double-ADC receiver using exemplary hardware components can provide enabling system performance levels for embodiments of a TV-band cognitive radio system, and, can allow simultaneous decoding of essentially all of the TV channels in a designated spectrum.

[0151] A conventional single-channel heterodyne receiver can be considered as a reference and a cost-effective alternative to the embodiments above. A heterodyne receiver can use progressive filtering in an analog domain in order to improve channel selectivity. Although such a receiver may not have the capability of simultaneous decoding of multiple channels, neither does it require high-speed ADCs. It can also be instructive to compare the single-channel performance of the heterodyne receiver with that of the wideband receiver.

[0152] IP3 requirements for realizable embodiments of a double-ADC architecture can be relatively stringent. In some embodiments, the worst-case IM3 interference can be allowed to be higher than the thermal noise floor.

[0153] Remaining interference can then be removed in a digital domain through distortion compensation techniques.

A Reference Heterodyne Receiver Design

[0154] RF system design embodiments of a conventional single-channel heterodyne receiver can serve as a reference point and as an alternative to wideband direct-conversion receiver embodiments discussed herein.

Heterodyne Frequency Planning

[0155] Frequency planning for a heterodyne receiver can present further design challenges than that of a direct-conversion receiver. For some embodiments of a heterodyne receiver, two frequency translations can be required, i.e. from RF to IF and from IF to baseband (although frequency translation between IF and baseband can be achieved in some embodiments employing direct IF sampling and/or digital frequency synthesis). One of the key design issues of a heterodyne receiver embodiment can be specification of an intermediate frequency (IF).

IF Filtering:

[0156] As discussed herein regards Receiver Architecture Choices, a main purpose of an IF stage in a heterodyne receiver can be to provide channel selection filtering, because effective filtering can be more easily accomplished at a relatively low IF frequency than at a relatively high RF frequency. Availability of off-the-shelf IF filters can contribute to a practical selection and/or specification of an IF frequency.

[0157] A surface acoustic wave (SAW) filter can be a typical choice for IF channel selection. Some embodiments of exemplary commercially available SAW filters can have specified center frequencies of 40 MHz, 70 MHz, and 140 MHz [16,17].

Image Rejection:

[0158] Referring to Diagram **600** of FIG. **6**: Mixer **614** can be a second-order device, that is, a device that does not differentiate between positive and negative frequencies. Consequently, after mixing, a down-converted signal can contain both an intended signal and an image signal as illustrated in Diagram **1200** of FIG. **12**.

[0159] Mathematically, an intended signal can be represented as

$$R_s(t)\cos[2\pi f_c t+\phi_s(t)] \quad (43)$$

which can be band-limited to $[f_c-W, f_c+W]$; an image signal can be represented as

$$R_i(t)\cos[2\pi f_i t+\phi_i(t)] \quad (44)$$

and mixing can use a tone signal

$$\cos(2\pi f_{LO}t)$$

[0160] A mixing operation can be expressed as

$$\{R_s(t)\cos[2\pi f_c t+\phi_s(t)]+R_i(t)\cos[2\pi f_i t+\phi_i(t)]\}\times\cos(2\pi f_{LO}t)= \underbrace{\frac{1}{2}R_s(t)\cos[2\pi(f_c-f_{LO})t+\phi_s(t)]}_{1}+\underbrace{\frac{1}{2}R_s(t)\cos[2\pi(f_c+f_{LO})t+\phi_s(t)]}_{2}+\underbrace{\frac{1}{2}R_i(t)\cos[2\pi(f_i-f_{LO})t+\phi_i(t)]}_{3}+\underbrace{\frac{1}{2}R_i(t)\cos[2\pi(f_i+f_{LO})t+\phi_i(t)]}_{4} \quad (45)$$

[0161] A filtering operation $[f_c-f_{LO}-W, f_c-f_{LO}+W]$ can be applied to the signal after mixing, whereupon the second and fourth term in the above expression can essentially vanish. However, for an image signal at

$$f_i=2f_{LO}-f_c \quad (46)$$

the third term above can become

$$\frac{1}{2}R_i(t)\cos[2\pi(f_{LO}-f_c)t+\phi_i(t)]=\frac{1}{2}R_i(t)\cos[2\pi(f_c-f_{LO})t-\phi_i(t)] \quad (47)$$

In other words, this signal can be in the same band, i.e. $[f_c-f_{LO}-W, f_c-f_{LO}+W]$, as an intended signal after mixing (first term). One way to resolve the problem is to apply an image rejection (IR) filter **1202** before mixing as shown in the graph **1200** of FIG. **12** so that an image signal at $2f_{LO}-f_c$ can be rejected before a signal enters a mixer.

Frequency Planning:

[0162] For some embodiments, an intended signal can be in a specified band such as [470,806] MHz. An ideal image rejection filter can be a brick-wall filter around a specified band. Suppose such an ideal IR (image rejection) filter is used in an embodiment: essentially full pass in [470,806] MHz and essentially infinite rejection otherwise. f_c, f_{LO}, and f_{IF} can be the carrier, LO, and IF frequencies, respectively. To have image-free mixing in some embodiments, the following conditions must be essentially met

$$2f_{LO}-f_c<470 \text{ or } 2f_{LO}-f_c>806 \quad (48)$$

$$f_c-f_{LO}=+f_{IF} \text{ or } f_c-f_{LO}=-f_{IF} \quad (49)$$

Since $2f_{LO}-f_c$ is an image frequency, the first condition above can suggest that the image frequency must stay in a rejection band of an IR filter. The second condition can be expressed as $|f_c-f_{LO}|=f_{IF}$, where the absolute value is due to the properties of a realizable signal mixer.

[0163] Given IF frequency candidates of 40 MHz, 70 MHz, and 140 MHz, the three possible IF frequencies can be substituted in the above conditions and the systems solved for possible solutions. Solutions can be advantageously perceived graphically, as shown in graphs **1300**, **1400**, and **1500**.

[0164] Graph **1300** corresponds to a condition (f_{IF}=140 MHz). Line A **1302** corresponds to ($2f_{LO}-f_c$=470). Line B **1304** corresponds to ($2f_{LO}-f_c$=806). Line C **1306** corresponds to (f_c-f_{LO}=140). Line D **1308** corresponds to (f_c-f_{LO}=−140).

[0165] A portion of line C **1306** shown in a region below line A **1302** (corresponding to ($2f_{LO}-f_c$<470)) can be part of a solution, and, a portion of line D **1308** shown in a region above line B **1304** (corresponding to ($2f_{LO}-f_c$>806)) can also be part of a solution. By way of non-limiting example, f_c=500 MHz is shown to be in Solution Region_**1 1310** and with an f_{LO}=360 MHz, an image is thereby at 220 MHz and within a rejection region of the IR filter. Since each solution region can cover a part of the input signal frequency range (e.g. Solution Region_**1 1310** can cover 750 MHz and below and Solution Region_**2 1312** can cover 543 MHz and above), both regions can be necessary for an embodiment comprising an entire exemplary input frequency range, i.e. [470,806] MHz. Thus the constraints of Graph **1300** can lead to a practical realization for single-stage image-free IF mixing in some embodiments.

[0166] Graph **1400** corresponds to a condition (f_{IF}=70 MHz). Line A **1402** corresponds to ($2f_{LO}-f_c$=470). Line B **1404** corresponds to ($2f_{LO}-f_c$=806). Line C **1406** corresponds to (f_c-f_{LO}=70). Line D **1308** corresponds to (f_c-f_{LO}=−70).

[0167] Graph **1400** shows a Gap **1414** between solution regions **1410 1412**, corresponding to a region wherein image-free mixing can not occur in some embodiments. For the constraints corresponding to graph **1400**, some embodiments employing 70 MHz IF filters for single-stage image-free IF mixing can fail to provide a solution for an entire exemplary TV band [470,806] MHz.

[0168] A similar analysis can show that some embodiments employing 40 MHz IF filters under such constraints can fail to provide a solution covering an entire exemplary TV band [470,806] MHz.

[0169] The conditions for Graph **1300** and Graph **1400** correspond to an ideal brick-wall IR filter over the signal band. In practice, typical filter embodiments can have gradual edge roll-offs. Thus in some embodiments margins can be employed at IR filter edges in order to provide a specified level of image rejection. By way of non-limiting example, a 100-MHz margin can be added to each side of an IR filter in order to account for edge roll-offs. An image rejection region can then be

$$2f_{LO}-f_c<370 \text{ and } 2f_{LO}-f_c>906 \quad (50)$$

[0170] Graph **1500** shows a solution for the conditions discussed. Line A **1502** corresponds to ($2f_{LO}-f_c$=370). Line B **1504** corresponds to ($2f_{LO}-f_c$=906). Line C **1506** corresponds to (f_c-f_{LO}=140). Line D **1508** corresponds to (f_c-f_{LO}=−140).

[0171] An advantageous overlap between Solution Region_**1 1510** and Solution Region_**2 1512** can be relatively smaller than the overlap shown in Graph **1300**. By way of non-limiting example, 650 MHz can be a cutoff frequency. For exemplary TV channels 14 (center 473 MHz) to 43 (center 647 MHz), an LO frequency can be

$$f_{LO}=f_c-140 \quad (51)$$

and for exemplary TV channels 44 (center 653 MHz) to 69 (center 803 MHz), an LO frequency can be

$$f_{LO}=f_c+140 \quad (52)$$

Gain Planning

[0172] Graph **1600** of FIG. **16** depicts the response of an exemplary SAW filter [Vectron International, "Surface Acoustic Wave (SAW) Products" http://www.vectron.com/products/saw/saw.htm]. The filter has a specified passband of approximately 6 MHz. The specified rejection for two 6 MHz channels adjacent to the pass band can be specified as at least 15 dB (due to the finite roll-offs at filter edges as shown in the figure). Specified rejection for the channels not adjacent to the pass band can be at least 50 dB. The filter has a specified insertion loss of 22.5 dB.

[0173] A SAW filter channel rejection mask as shown in FIG. **17** can be assumed. A target channel k has 0 dB rejection. Rejection for adjacent channels k±1 is specified as 15 dB. Rejection for all other channels is specified as 40 dB. Some embodiments of SAW filters are able to essentially meet the specified requirements of such a rejection mask.

[0174] As discussed regards Receiver Chain Gain Planning, a per channel thermal noise floor n_0^{dB} of −106 dBm can be specified, a per channel quantization noise floor n_q^{dB} of −68 dBm can be specified, and a receiver chain noise figure $F^{thrmRF dB}$ of 6 dB can be specified. A SNR degradation due to the quantization noise can be required to be 0.46 dB, corresponding to an X^{dB} value of 10 dB. A total RF chain amplification requirement can be obtained from the following SNR equation

$$SNR_{Final}^{dB} = 10\log_{10}\frac{g_{RF}P_k}{g_{RF}n_0F_{RF}+n_q} = \min\{30\text{ dB}, P_k^{dB} - (n_0^{dB} + F_{RF}^{dB}) - 0.46\} \tag{53}$$

where SNR_{Final}^{dB} is SNR measured at the baseband input; g_{RF} is total RF chain gain; and P_k is input (received) signal power of a target channel. It can be appreciated that the SNR ceiling can be set to 30 dB in order to meet specified performance levels. Graph **1800** of FIG. **18** depicts a graphical solution to Equation (53). As shown in the figure, for high input power levels the gain required can be reduced as a result of a SNR ceiling at 30 dB.

[0175] A total input signal power can be expressed

$$P_k + (P_{k-1} + P_{k+1}) + \sum_{l\in\Omega'} P_l \tag{54}$$

where Ω' can be a whole channel set excluding channels k and k±1. Assuming a SAW filter rejection mask as shown in Diagram **1700**, after SAW filtering, a total signal power can be expressed:

$$P_k + 10^{-\frac{15}{10}}(P_{k-1} + P_{k+1}) + 10^{-\frac{40}{10}}\sum_{l\in\Omega'} P_l \tag{55}$$

and a total signal power at an ADC (after RF chain amplification) can be expressed:

$$g_{RF}\left[P_k + 10^{-\frac{15}{10}}(P_{k-1} + P_{k+1}) + 10^{-\frac{40}{10}}\sum_{l\in\Omega'} P_l\right] \tag{56}$$

[0176] A condition can be imposed that the signal powers of the two adjacent channels satisfy

$$10\log_{10}\frac{P_{k-1}+P_{k+1}}{P_k} < A^{dB} \tag{57}$$

where A^{dB} can be a maximum specified adjacent channel power differential, e.g. 40 dB. Without this condition, adjacent channel leakage could overwhelm a signal in a desired channel (e.g. referring to the DTV transmission mask in Diagram **2100**). Assuming a maximum total input signal power of −20 dBm, signal power at the ADC can have an upper bound P_{Bound} such that:

$$\begin{aligned} g_{RF}\left[P_k + 10^{-\frac{15}{10}}(P_{k-1}+P_{k+1}) + 10^{-\frac{40}{10}}\sum_{l\in\Omega'} P_l\right] &< \\ g_{RF}\left[P_k + 10^{-\frac{15}{10}}AP_k + 10^{-\frac{40}{10}}\sum_{l\in\Omega'} P_l\right] &< \\ g_{RF}\left[P_k + 10^{-\frac{15}{10}}10^{\frac{40}{10}}P_k + 10^{-\frac{40}{10}}10^{-\frac{20}{10}}\right] &= P_{Bound} \end{aligned} \tag{58}$$

where in the second inequality A^{dB} can be specified as 40 dB and a constraint that $\Sigma_{l\in\Omega}P_l$ is less than −20 dBm can be employed. This upper bound is plotted in Diagram **1800**.

[0177] According to Diagram **1800**, a maximum possible signal power at an ADC can be less than −3 dBm. A thermal noise power, shown as Final noise power in Diagram **1800**, at this point can be −58 dBm. An IP3 requirement for an amplifier in the signal chain just prior to an ADC can then be expressed

$$-3 + \frac{-3-(-58)}{2} = 24.5\,dBm \tag{59}$$

[0178] In some embodiments, a 140 MHz IF signal can be down-converted to a baseband using a conventional down-conversion approach as shown in Diagram **600**. Alternative embodiments can employ direct IF sampling with digital down-conversion. In some embodiments, ADCs with 400 MHz and/or greater sampling frequencies [8,9,12] can be used to perform direct IF sampling.

[0179] In some embodiments, an LNA and a mixer can provide enough gain to overcome a SAW filter insertion loss, which can have a typical value of 20 dB. Exemplary low-loss SAW filters (with 10 dB insertion loss) are available [Integrated Device Technology, Inc., "Saw Filter Products", http://www.idt.com/?id=3350]. Employing such SAW filters in some embodiments can contribute to relaxing a specified amplification requirement on an LNA and mixer. As shown in Diagram **1800**, an RF chain can be specified to provide an adjustable gain range of 60 dB, i.e. from −20 dB to +40 dB. In some embodiments an LNA and mixer can provide a switchable gain step of 20 dB. One or more amplifier(s) following a SAW filter can then provide an adjustable gain of between 0 and 40 dB. This gain can be combined with a 20 dB LNA-mixer gain step and can provide a specified 60 dB dynamic range. Automatic gain control (AGC) can be employed to ensure correct gain levels at an LNA and mixer and gain-

adjustable amplifier(s), under the condition of varying input signal powers, in order to achieve optimal system performance.

Example System:

[0180] Diagram **1900** depicts a block diagram embodiment of an example single-channel heterodyne receiver wherein exemplary cascaded SAW filters can be used to achieve a desired level of channel selectivity.

[0181] Many exemplary processing components are identified.

[0182] The system of diagram **1900** comprises individual processing elements well known in the art and/or described herein. Each of these elements is generally identified herein with a name and/or abbreviation that corresponds to its well known and/or herein described function. Analog filters comprise BandPass **1908** and LowPass **1926**. Exemplary SAW filters comprise IF Filter**1** **1920** and IF Filter**2** **1922**. Gain modifying elements comprise low noise amplifiers LNA**1** **1906** and LNA**2** **1910**, automatic gain control AGC**1** **1918** and AGC**2** **1924**. Analog to digital converters comprise AD **1928**. Mixers comprise Mixer **1916**. Attenuators comprise Attenuator **1912**.

[0183] LNA**1** **1906** can be selectably coupled with Antenna **1902** via switch **1904**. When so coupled, LNA**1** **1906** can receive a signal from Antenna **1902**. BandPass **1908** can be coupled with and receive a signal from LNA**1** **1906**. LNA**2** **1910** can be coupled with and receive a signal from BandPass **1908**. Attenuator **1912** can be coupled with and receive a signal from LNA**2** **1910**. Mixer **1916** can be coupled with and receive a signal from Attenuator **1912**. Mixer **1916** can be coupled with and receive a signal from Buffer **1914**.

[0184] Buffer **1914** can provide an LO signal, as from an oscillator.

[0185] AGC**1** **1918** can be coupled with and receive a signal from Mixer **1916**. IF Filter**1** **1920** can be coupled with and receive a signal from AGC**1** **1918**. IF Filter**2** **1922** can be coupled with and receive a signal from IF Filter**1** **1920**. AGC**2** **1924** can be coupled with and receive a signal from IF Filter**2** **1922**. LowPass **1926** can be coupled with and receive a signal from AGC**2** **1924**. AD **1928** can be coupled with and receive a signal from LowPass **1926**.

[0186] AD **1186** can provide a baseband component signal.

[0187] In some embodiments, an exemplary ADC, Analog Devices' AD12401 [Analog Devices, Inc. AD12401, May 2006, op. cit.], a 12-bit 400 MHz ADC, can be used for direct IF sampling. The following table shows a system gain analysis. An exemplary SAW filter can have adjacent channel rejection of 8 dB and "Max. output power" can be reduced accordingly at the output of each SAW filter. Thus for some exemplary embodiments, a resulting overall system noise figure can be computed to be about 5.2 dB.

Name	Vendor: Part	NF (db)	Output NF (dB)	Gain (dB)	Max. output power (dBm)	IP3 (dBm)	DR (dB)
LNA1	Mini-Circuits: HELA-10B	3.5	3.5	12	−8	47	110

-continued

Name	Vendor: Part	NF (db)	Output NF (dB)	Gain (dB)	Max. output power (dBm)	IP3 (dBm)	DR (dB)
Bandpass	TBD	3	3.6	−3	−11	∞	∞
LNA2	Mini-Circuits: HELA-10B	3.5	3.9	12	1	47	92
Attenuator	TBD	4	3.9	−4	−3	∞	∞
Mixer	Mini-Circuits: ZFY-2	8	4.1	−8	−11	30	82
AGC1	Linear Tech: LT5514	7	4.9	17	6	47	82
IF Filter 1	Sawtek: 854913	6	4.9	−6	−8	∞	∞
IF Filter 2	Sawtek: 854913	6	4.9	−6	−22	∞	∞
AGC2	Linear Tech: LT5514	7	5.2	31	9	47	76
Lowpass	TBD	3	5.2	−3	6	∞	∞

Transmitter Architecture

[0188] Diagram **2000** depicts an embodiment of a wideband direct-conversion transmitter comprising a similar structure as that of the wideband direct-conversion receiver of Diagram **800**. ADC elements **826** **836** and DAC elements **2026** **2036** have corresponding positions within the depicted signal processing chains, respectively. The position of LNA **806** corresponds to that of PA **2006**. Essentially the same frequency planning approaches as discussed regarding direct-conversion receiver embodiments can be employed regarding direct-conversion transmitter embodiments. In some embodiments, a mixing stage in diagram **2000** can perform an up-conversion function; the mixing stage can comprise Mixer **2020** and Mixer **2030**, and Quad splitter **2008**.

[0189] Each of the digital to analog converters DAC **2026** **2036** can provide a digital to analog conversion function to a corresponding received analog signal.

[0190] Each of the converters DAC **2026** **2036** can be provided with a baseband component signal (I and Q, respectively).

[0191] Each of the Baseband filters **2022** **2032** can provide a filtering function to a corresponding received signal.

[0192] Baseband filter **2022** can be coupled with and receive a signal from DAC **2026**. Baseband filter **2032** can be coupled with and receive a signal from DAC **2036**.

[0193] Oscillator LO **2010** can provide a signal that can be a tone signal at a specified frequency.

[0194] Quad splitter **2008** can provide a quadrature splitting function to a received signal, thereby providing an in-phase (I) and a quadrature (Q) signal.

[0195] Quad splitter **2008** can be coupled with and receive a signal from LO **2010**.

[0196] Mixer **2020** can be coupled with and receive a signal of a first specified phase from Quad splitter **2008**.

[0197] Mixer **2020** can be coupled with and receive a filtered signal from Baseband filter **2022**.

[0198] Mixer **2030** can be coupled with and receive a signal of a second specified phase from Quad splitter **2008**.

[0199] Mixer **2030** can be coupled with and receive a filtered signal from Baseband filter **2032**.

[0200] Mixer **2020** can provide a mixing function, providing a signal responsive to a signal received from Quad splitter **2008** and responsive to a signal received from Baseband filter **2022**. Similarly,

[0201] Mixer **2030** can provide a mixing function, providing a signal responsive to a signal of a second specified phase received from Quad splitter **2008** and responsive to a signal received from Baseband filter **2032**.

[0202] Tx Power Control **2007** can provide a transmission power control function to a received signal and/or received combination of signals. A transmission power control function can comprise a selectably adjustable gain and/or predistortion and/or any other known and/or convenient transmission power control techniques.

[0203] Tx Power Control **2007** can be coupled with and receive a combination of signals from Mixer **2020** and Mixer **2030**. In some embodiments, a combiner element can be employed to combine signals from Mixer **2020** and Mixer **2030**.

[0204] A power amplifier PA **2006** can provide a power amplification function to a received signal.

[0205] PA **2006** can be coupled with and receive a signal from Tx Power Control **2007**.

[0206] RF filter **2004** can provide a filtering function to a received signal.

[0207] RF filter **2004** can be coupled with and receive a power-amplified signal from PA **2006**.

[0208] Antenna **2002** can provide an antenna transmission function to a received signal.

[0209] Antenna **2002** can be coupled with and receive a filtered signal from RF filter **2004**.

[0210] Antenna **2002** can provide transmission of a signal responsive to a filtered signal received from RF filter **2004**.

[0211] A maximum transmission power can be limited to 1 W or 30 dBm according to the NPRM [FCC, May 2004, op. cit.]. Considering the same exemplary 16-bit DAC as previously discussed, a maximum signal power out of the DAC can be calculated

$$10\log_{10}\left(2\times\frac{0.5^2}{50}\times10^3\right)=10\,dBm \tag{60}$$

[0212] Alternative modulation schemes can have varying backoff requirements. For example, if OFDM is used, a backoff of 2.5 bits translating into a power loss of 15 dB can be required. A maximum signal power out of a DAC **2026 2036** can then be −5 dBm. A total transmitter RF chain amplification of 35 dB can then be needed before a signal reaches the antenna. A PA **2006** can typically provide 20 dB to 30 dB of gain. Additional amplification stages can then be needed between a PA **2006** and a DAC (**2026** and/or **2036**).

[0213] Transmitter power control (TPC) can be helpful in improving wireless system capacity. TPC can be achieved using a variable gain amplifier **2007** as shown in Diagram **2000**. Alternatively, by employing a DAC with an ample number of bits (16), transmission power control can also be achieved using the DAC. For example, the top 8 bits of a DAC output can be dedicated to TPC. This can provide a total of 8×6=48 dB TPC range. In some embodiments, the remaining 8 DAC bits can be used for OFDM modulation: 2.5 bits for backoff and 5.5 bits for OFDM signal representation.

[0214] The FCC may adopt the same DTV transmit mask as shown in Graph **200** for a TV-band cognitive radio. Given a modulation format, using the spectrum mask, linearity requirements of RF components can be derived.

[0215] Since a PA can provide a last amplification stage, transmit chain nonlinearity can be dominated by that of the PA. Digital pre-distortion can be used for PA linearization. Digital pre-distortion techniques can be considered in a baseband system design.

[0216] Diagram **2200** depicts a block diagram in some detail of an example embodiment of a wideband direct-conversion transmitter architecture essentially as depicted in Diagram **2000**. In some embodiments, an exemplary integrated wideband up-converter HMC497LP4 from Hittite Microwave can be used for signal up-conversion. In some embodiments, an exemplary Mini-Circuits ZHL-3010 amplifier can be used as a PA driver. In some embodiments, an Ophir 5303039A PA can have an output IP3 of 56 dBm and can provide an output power of 36 dBm with out-of-band emission level at −4 dBm. Notably, in some embodiments, every 1 dB reduction in transmission power can result in a 2 dB reduction in out-of-band emissions.

[0217] Transmission power control can be employed in some embodiments to reduce out-of-band emissions.

[0218] The system of diagram **2200** comprises individual processing elements well known in the art and/or described herein. Each of these elements is generally identified herein with a name and/or abbreviation that corresponds to its well known and/or herein described function. Analog filters comprise BandPass **2204** and LowPass **2222 2232**. Gain modifying elements comprise Gain **2223 2233**, PA **2206**, and VGA **2207**. Digital to analog converters comprise DAC **2226 2236**. An Upconverter **2209** can comprise splitter/combiners, mixers, and a delay element. In some embodiments an Upconverter **2209** can be adapted to combine received (I) and (Q) baseband component signals into a signal having a modulating or carrier signal at the frequency of a received LO signal; hence "upconversion". In some embodiments VGA **2207** can be adapted to provide transmission power control.

[0219] Gain **2223** can be coupled with and receive a signal from DAC **2226**. LowPass **2222** can be coupled with and receive a signal from Gain **2223**. Upconverter **2209** can be coupled with and receive a baseband component signal from LowPass **2222**. Gain **2233** can be coupled with and receive a signal from DAC **2236**. LowPass **2232** can be coupled with and receive a signal from Gain **2233**. Upconverter **2209** can receive an LO signal.

[0220] VGA **2207** can be coupled with and receive a modulated signal from Upconverter **2209**. PA **2206** can be coupled with and receive a signal from VGA **2207**. BandPass **2204** can be coupled with and receive a signal from PA **2206**. Antenna **2202** can be selectably coupled via Switch **2203** with BandPass **2204**. When so coupled, Antenna **2202** can receive a signal from BandPass **2204** When so coupled, Antenna **2202** can provide transmission of a signal responsive to a filtered signal received from BandPass **2204**.

Baseband System Analysis:

[0221] A baseband system design is described herein.

[0222] FFT/IFFT-based digital filtering and reconstruction for arbitrary channel rejection:

[0223] A double-ADC architecture for a wideband direct-conversion TV-band cognitive radio receiver is herein described. An enabling function for this architecture can be

channel rejection through digital filtering and reconstruction. Herein described is such a channel rejection method from a baseband perspective.

[0224] Channel filtering can be accomplished using a common digital filter, e.g. a raised-cosine filter. It can also be achieved using an FFT and IFFT pair in combination. The latter approach can be especially efficient in simultaneous filtering of multiple channels, as required in some embodiments.

[0225] Herein described are derivations of a continuous-time version of the operations of FFT/IFFT based filtering and reconstruction. Equivalent discrete-time version of the operations are subsequently described

Channel Rejection Analysis:

[0226] Referring to Equation (37), suppose a total signal is

$$y(t) = \sum_{k\in\Omega} y_k(t) = \sum_{k\in\Omega} [x_k(t) + q_k(t)]e^{j2\pi f_k t} \tag{61}$$

from which a designated set of channels are to be rejected

$$\sum_{l\in\Lambda} y_l(t) \tag{62}$$

An input signal can be truncated using a time-domain window w(t):

$$y_l(t)=w(t)y(t) \tag{63}$$

which can then be "FFT'd" in order to generate a frequency-domain signal representation

$$Y_1(f) = F[y_1(t)] = W(f) \otimes \sum_{k\in\Omega} Y_k(f) \tag{64}$$

[0227] To retrieve the signal on a particular channel $l \in \Lambda$, a frequency-domain rectangular window on $Y_1(f)$ can be applied:

$$Y_1(f)=\Pi_{2C}(f-f_l)Y_1(f) \tag{65}$$

where $\Pi_{2C}(f)$ is a rectangular window over the frequency range [−C,C] with

$$C=3\text{ MHz}+\Delta \tag{66}$$

and Δ being the excess filter bandwidth. For all the channels in Λ, then

$$Y'(f) = \sum_{l\in\Lambda} Y_l(f) = \left[\sum_{l\in\Lambda} \Pi_{2C}(f - f_l)\right]Y_1(f) \tag{67}$$

[0228] Note that for simplifying assumption that the channels in Λ are disjoint. In the case of contiguous channels, an overall rectangular window can be applied to the contiguous channels. The signal Y'(f) can then be transformed to time domain in order to generate y'(t) as a reconstructed version of the signals on the channels in Λ.

[0229] In order to evaluate how much rejection can be achieved, the signal y'(t) can be subtracted from $y_1(t)$:

$$\begin{aligned} y_1(t) - y'(t) &= w(t)y(t) - y'(t) \\ &= w(t)\left[\sum_{k\in(\Omega-\Lambda)} y_k(t)\right] + \left[w(t)\sum_{l\in\Lambda} y_l(t) - y'(t)\right] \end{aligned} \tag{68}$$

So the remaining signal power on the channels in Λ can be expressed:

$$\int_{-\infty}^{\infty} E\left[\left|w(t)\sum_{l\in\Lambda} y_l(t) - y'(t)\right|^2\right] dt \tag{69}$$

Since a similar amount of rejection can be applied to any individual channel $l \in \Lambda$, consider that Λ only contains one channel l as a simplifying assumption. Using Parseval's theorem

$$\int_{-\infty}^{\infty} E[|w(t)y_l(t) - y_l(t)|^2]\,dt = \int_{-\infty}^{\infty} E[|W(f)\otimes Y_l(f) - Y_l(f)|^2]\,df \tag{70}$$

Since the original signal power is

$$\int_{-\infty}^{\infty} E[|w(t)y_l(t)|^2]\,dt = \int_{-\infty}^{\infty} E[|W(f)\otimes Y_l(f)|^2]\,df \tag{71}$$

rejection can be expressed as:

$$R^{\text{dB}} = 10\log_{10}\frac{\int_{-\infty}^{\infty} E[|W(f)\otimes Y_l(f)|^2]\,df}{\int_{-\infty}^{\infty} E[|W(f)\otimes Y_l(f) - Y_l(f)|^2]\,df} \tag{72}$$

$Y_1(f)$ can be assumed to be band-limited white Gaussian noise—a justified assumption according to the central limit theorem, if the signal $x_l(t)$ corresponds to filtered random data samples at 6 MHz, e.g. the DTV signal. This can result in

$$E[Y_l(f_1)Y_l^*(f_2)] = \begin{cases} N_0\delta(f_1 - f_2) & f_1, f_2 \in [f_l - B, f_l + B] \\ 0 & \text{Otherwise} \end{cases} \tag{73}$$

where in some embodiments B=3 MHz. A spectral power of the original signal, i.e. $E[|W(f)\otimes Y_1(f)|^2]$, can be calculated as:

$$\begin{aligned} E[|W(f)\otimes Y_l(f)|^2] &= E\left[\begin{array}{l}\int_{-\infty}^{\infty} W(f-u)Y_l(u)du \\ \int_{-\infty}^{\infty} W^*(f-v)Y_l^*(v)dv\end{array}\right] \\ &= E\left[\begin{array}{l}\int_{f_l-B}^{f_l+B} W(f-u)Y_l(u)du \\ \int_{f_l-B}^{f_l+B} W^*(f-v)Y_l^*(v)dv\end{array}\right] \end{aligned} \tag{74}$$

-continued

$$= \int_{f_l-B}^{f_l+B}\int_{f_l-B}^{f_l+B} du\,dv\,W(f-u)$$

$$W^*(f-v)E[Y_l(u)Y_l^*(v)]$$

$$= \int_{f_l-B}^{f_l+B}\int_{f_l-B}^{f_l+B} du\,dv\,W(f-u)$$

$$W^*(f-v)N_0\delta(u-v)$$

$$= N_0\int_{-B}^{+B}|W(f-f_l-u)|^2 du$$

-continued

$$= \frac{\int_{-\infty}^{\infty}K(f)df}{\int_{-\infty}^{\infty}[1-\Pi_{2C}(f)]K(f)df}$$

or

$$R^{dB} = 10\log_{10}\left[\frac{\int_{-\infty}^{\infty}K(f)df}{\int_{-\infty}^{\infty}[1-\Pi_{2C}(f)]K(f)df}\right] \tag{79}$$

Assuming that the time-domain window is a raised-cosine window:

$$w(t) = \begin{cases} \frac{1}{2}+\frac{1}{2}\cos\left\{\frac{\pi}{\beta T_w}\left[t+\frac{1}{2}(1-\beta)T_w\right]\right\} & -\frac{1}{2}(1+\beta)T_w \le t \le -\frac{1}{2}(1-\beta)T_w \\ 1 & -\frac{1}{2}(1-\beta)T_w \le t \le \frac{1}{2}(1-\beta)T_w \\ \frac{1}{2}+\frac{1}{2}\cos\left\{\frac{\pi}{\beta T_w}\left[t-\frac{1}{2}(t-\beta)T_w\right]\right\} & \frac{1}{2}(1-\beta)T_w \le t \le \frac{1}{2}(1+\beta)T_w \\ 0 & \text{Otherwise} \end{cases} \tag{80}$$

[0230] Now considering the spectral power after rejection, i.e. $E[|W(f)\otimes Y_1(f)-Y_1(f)|^2]$. Inner terms can be expressed:

$$W(f)\otimes Y_l(f)-Y_l(f) = W(f)\otimes Y_l(f)-\Pi_{2C}(f-f_l) \tag{75}$$

$$\left[W(f)\otimes\sum_{k\in\Omega}Y_k(f)\right]$$

$$\approx W(f)\otimes Y_l(f)-\Pi_{2C}(f-f_l)[W(f)\otimes Y_l(f)]$$

$$= [1-\Pi_{2C}(f-f_l)]W(f)\otimes Y_l(f)$$

where an approximation can be taken because the signal $Y_1(f)$ on channel l inside the rectangular window $\Pi_{2C}(f-f_l)$ is far stronger (which is the reason it is being rejected) than the signals on the other channels whose power leakages into the channel are then negligible. From the above, it follows:

$$E[|W(f)\otimes Y_l(f)-Y_l(f)|^2] = [1-\Pi_{2C}(f-f_l)]^2E[|W(f)\otimes Y_l(f)|^2] \tag{76}$$

$$[1-\Pi_{2C}(f-f_l)]N_0$$

$$\int_{-B}^{+B}|W(f-f_l-u)|^2 du$$

Let

[0231]

$$K(f)=\int_{-B}^{+B}|W(f-u)|^2\,du \tag{77}$$

The rejection can then be expressed as:

$$R = \frac{\int_{-\infty}^{\infty}N_0K(f-f_l)df}{\int_{-\infty}^{\infty}[1-\Pi_{2C}(f-f_l)]N_0K(f-f_l)df} \tag{78}$$

with frequency-domain representation:

$$W(f) = \frac{\sin\pi fT_w}{\pi f}\frac{\cos(\pi\beta fT_w)}{1-4\beta^2f^2T_w^2} \tag{81}$$

[0232] In some embodiments a further assumption can be employed that an FFT of size N is employed on input signal samples at 400 MHz such that

$$T_w(1+\beta) = N\frac{1}{400} \Rightarrow T_w = \frac{N/400}{(1+\beta)} \tag{82}$$

where T_w is expressed in μs. Note that in some embodiments the subcarrier spacing (inverse of the FFT period) can be:

$$\frac{400}{N}\text{ MHz} = \frac{400\times10^3}{N}\text{ kHz} \tag{83}$$

Channel Rejection Performance Simulation:

[0233] Computer simulation can be employed to compute the rejection expression of Equation (79).

[0234] In some embodiments a 20-30 dB rejection can be sufficient for a double-ADC architecture as discussed herein. The following table shows three example configurations that can achieve 20 dB rejection

N	β	Δ (kHz)
512	0.4	500
1024	0.3	160
2048	0.2	30

Equivalent Discrete-Time Operations for Filtering and Reconstruction:

[0235] An embodiment utilizing equivalent discrete-time operations can be described.

[0236] A windowing function can be applied

$$y_l(n)=w(n)y(n) \tag{84}$$

where w(n) is given by Equation (80) with T_w given by Equation (82) and a sampling time t can be replaced by a sampling index

$$n = \frac{t}{T_s} \tag{85}$$

where

$$Y_1(k) = \frac{1}{\sqrt{N}} \sum_{n=-N/2}^{N/2-1} y_1(n) e^{-j2\pi \frac{k}{N} n} \tag{86}$$

is the sampling period.

[0237] A FFT can be performed on the resulting signal

$$T_s = \frac{1}{400}\ \mu s$$

[0238] A rejection mask $\Sigma_{i\epsilon\Lambda}\Pi_{2C}(f-f_i)$ can be applied. This operation can comprise the steps of: finding subcarriers whose indices are in the rejection mask; setting $Y'(k)=Y_1(k)$ for those subcarriers; and, nullifying Y'(k) for all other subcarriers.

[0239] An inverse Fourier transform can be applied

$$y'(n) = \frac{1}{\sqrt{N}} \sum_{k=-N/2}^{N/2-1} Y'(k) e^{j2\pi k \frac{n}{N}} \tag{87}$$

Signal samples, i.e. y'(n)s, inside the flat portion of the window w(t), i.e. $t\epsilon[-(1-\beta)T_w,(1-\beta)T_w]$, can be sent to a DAC in order to construct a rejection signal y'(t).

[0240] In theory, the multiplication of two signals is only equivalent in continuous-time and discrete-time domains if the output signal is band-limited. Since w(t) is essentially time-limited, it is essentially not frequency-limited. However, because in an embodiment w(t) can have a bandwidth that is significantly narrower than the sampling bandwidth, i.e. 400 MHz, w(t) can be usefully approximated as a delta function in frequency domain. Under these conditions the continuous- and discrete-time multiplications can be essentially equivalent.

[0241] A FFT is of finite size can sample the input signal spectrum at only certain frequencies. The rejection performance result derived here for the continuous spectrum can represent an averaged performance.

[0242] The operations just described above can construct a rejection signal for the flat portion of a window. A signal in the nonflat portion of the window can require additional compensation that can introduce additional error. Constructing a rejection signal for a non-flat portion of a window can require additional FFT resources. That is, supporting a streaming operation can require overlapping two FFT windows such that their flat portions can be connected together.

[0243] The graph **2300** of FIG. **23** shows simulated multi-carrier signal power spectrums at different IP3s (or different Ds). Nonlinearity can cause spectrum "shoulders" in adjacent bands. The decibel (dB) difference between the inband signal power and the shoulder can be roughly 2D, or the system dynamic range P_{DR}.

[0244] The graph **2300** illustrates simulated signal power spectra under varying device nonlinearities in a multi-carrier system with subcarrier spacing 100 kHz, β=0.16, number of guard band subcarriers **8** (and number of valid data subcarriers **52**). Individual curves **2302 2304 2306 2308** are shown for IP3-related distance D values of (respectively) 15 dB, 25 dB, 35 dB, and ∞.

[0245] In some embodiments with a fixed output power, a higher device IP3 can be required in order to reduce adjacent channel leakage. In some embodiments, an IP3 requirement can be reduced by applying a digital predistortion technique and/or process.

[0246] In the foregoing specification, the embodiments have been described with reference to specific elements thereof. It will, however, be evident that various modifications and changes may be made thereto without departing from the broader spirit and scope of the embodiments. For example, the reader is to understand that the specific ordering and combination of process actions shown in the process flow diagrams described herein is merely illustrative, and that using different or additional process actions, or a different combination or ordering of process actions can be used to enact the embodiments. For example, specific reference to NTSC and/or ATSC and/or DTV embodiments are provided by way of non-limiting examples. Systems and methods herein described can be applicable to any other known and/or convenient channel-based communication embodiments; these can comprise single and/or multiple carriers per channel. The specification and drawings are, accordingly, to be regarded in an illustrative rather than restrictive sense.

What is claimed is:

1. A system for radio-frequency communications comprising:

a transceiver; and,

a baseband processor comprising a sensing processor element,

a transmit power control element, wherein the transceiver is coupled with the baseband processor.

* * * * *