US009208488B2

(12) **United States Patent**
**Liberty**

(10) **Patent No.: US 9,208,488 B2**
(45) **Date of Patent: Dec. 8, 2015**

(54) **USING A MOBILE WALLET INFRASTRUCTURE TO SUPPORT MULTIPLE MOBILE WALLET PROVIDERS**

(71) Applicant: **MOZIDO, INC.**, Austin, TX (US)

(72) Inventor: **Michael A. Liberty**, Orlando, FL (US)

(73) Assignee: **MOZIDO, INC.**, Austin, TX (US)

( * ) Notice: Subject to any disclaimer, the term of this patent is extended or adjusted under 35 U.S.C. 154(b) by 0 days.

(21) Appl. No.: **13/680,824**

(22) Filed: **Nov. 19, 2012**

(65) **Prior Publication Data**

US 2013/0132219 A1 May 23, 2013

**Related U.S. Application Data**

(60) Provisional application No. 61/562,301, filed on Nov. 21, 2011.

(51) **Int. Cl.**

| | |
|---|---|
| ***G06Q 20/00*** | (2012.01) |
| ***G06G 1/12*** | (2006.01) |
| ***G06Q 20/36*** | (2012.01) |
| ***G06Q 20/20*** | (2012.01) |
| ***G06Q 20/06*** | (2012.01) |

(52) **U.S. Cl.**

CPC ..... ***G06Q 20/36*** (2013.01); ***G06Q 20/065*** (2013.01); ***G06Q 20/202*** (2013.01)

(58) **Field of Classification Search**

None

See application file for complete search history.

(56) **References Cited**

U.S. PATENT DOCUMENTS

| | | | |
|---|---|---|---|
| 5,717,374 | A | 2/1998 | Smith |
| 5,828,739 | A | 10/1998 | Nakanishi |
| 5,991,749 | A | 11/1999 | Morrill, Jr. |
| 6,021,397 | A | 2/2000 | Jones et al. |
| 6,175,823 | B1 | 1/2001 | Van Dusen |
| 6,185,545 | B1 | 2/2001 | Resnick et al. |

(Continued)

FOREIGN PATENT DOCUMENTS

| | | |
|---|---|---|
| AU | 2007312879 | 4/2008 |
| CA | 2666616 | 4/2008 |

(Continued)

OTHER PUBLICATIONS

International Search Report for PCT/US2012/066013 dated Jan. 29, 2013.

(Continued)

*Primary Examiner* — Paul Danneman

(74) *Attorney, Agent, or Firm* — Workman Nydegger

(57) **ABSTRACT**

Embodiments are directed to performing a transaction using a third party mobile wallet, performing a transaction using a third party point of sale (POS) system and to making a purchase from a third party mobile wallet provided by a third party mobile wallet provider. In one scenario, a cloud-based transaction platform is provided, which receives communication from an agent terminal over a communication channel connected to the cloud-based transaction platform. The agent communication indicates that a customer desires to perform a mobile wallet transaction using their third party mobile wallet. The cloud-based transaction platform sends the agent communication to a third party mobile wallet platform, receives communication from the third party mobile wallet platform confirming processing of the transaction, and sends communication to the agent terminal over a communication channel connected to the cloud-based transaction platform, where the communication indicates confirmation of the processing of the transaction.

**22 Claims, 9 Drawing Sheets**

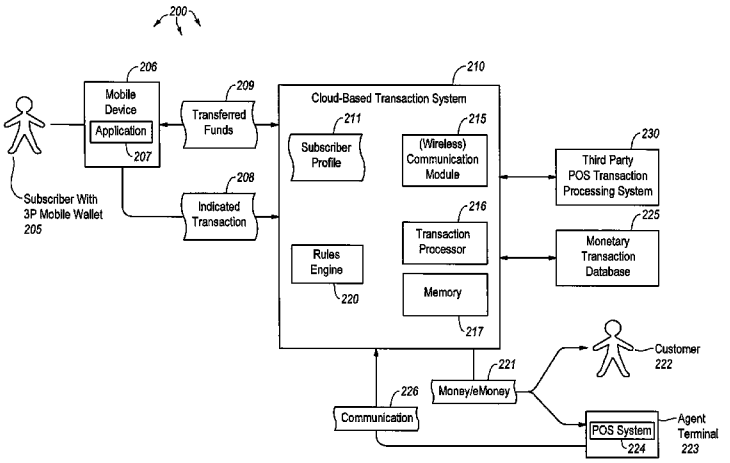

(56) **References Cited**

U.S. PATENT DOCUMENTS

| | | | |
|---|---|---|---|
| 6,250,557 | B1 | 6/2001 | Forslund |
| 6,415,156 | B1 | 7/2002 | Stadelmann |
| 6,622,015 | B1 | 9/2003 | Himmel |
| 6,697,839 | B2 | 2/2004 | Sini |
| 6,714,797 | B1 | 3/2004 | Rautila |
| 6,736,322 | B2 | 5/2004 | Gobburu |
| 6,819,219 | B1 | 11/2004 | Bolle |
| 6,840,448 | B2 | 1/2005 | Fukushima |
| 6,862,575 | B1 | 3/2005 | Antilla et al. |
| 6,873,974 | B1 | 3/2005 | Schutzer |
| 6,957,342 | B2 | 10/2005 | Vantanen |
| 7,016,532 | B2 | 3/2006 | Boncyk |
| 7,024,174 | B2 | 4/2006 | Nagy et al. |
| 7,054,430 | B2 | 5/2006 | Lynam |
| 7,069,001 | B2 | 6/2006 | Rupp et al. |
| 7,089,208 | B1 | 8/2006 | Levchin et al. |
| 7,099,850 | B1 | 8/2006 | Mann, II et al. |
| 7,100,821 | B2 | 9/2006 | Rasti |
| 7,107,247 | B2 | 9/2006 | Kinoshita et al. |
| 7,110,972 | B1 | 9/2006 | Handa et al. |
| 7,221,939 | B2 | 5/2007 | Ylitalo |
| 7,240,836 | B2 | 7/2007 | Vrotsos et al. |
| 7,248,855 | B2 | 7/2007 | Joyce et al. |
| 7,255,264 | B2 | 8/2007 | De Leon |
| 7,275,685 | B2 | 10/2007 | Gray et al. |
| 7,322,043 | B2 | 1/2008 | Letsinger |
| 7,325,132 | B2 | 1/2008 | Takayama |
| 7,334,720 | B2 | 2/2008 | Hulst et al. |
| 7,347,361 | B2 | 3/2008 | Lovett |
| 7,349,871 | B2 | 3/2008 | Labrou et al. |
| 7,353,382 | B2 | 4/2008 | Labrou et al. |
| 7,363,261 | B2 | 4/2008 | Whitehead, Jr. et al. |
| 7,403,652 | B2 | 7/2008 | Boncyk |
| 7,461,010 | B2 | 12/2008 | Kwan |
| 7,461,028 | B2 | 12/2008 | Wronski, Jr. |
| 7,477,780 | B2 | 1/2009 | Boncyk |
| 7,494,055 | B2 | 2/2009 | Fernandes et al. |
| 7,512,098 | B2 | 3/2009 | Jiang |
| 7,527,194 | B2 | 5/2009 | Truitt |
| 7,548,915 | B2 | 6/2009 | Ramer |
| 7,562,818 | B1 | 7/2009 | Bierbaum |
| 7,564,469 | B2 | 7/2009 | Cohen |
| 7,565,008 | B2 | 7/2009 | Boncyk |
| 7,606,560 | B2 | 10/2009 | Labrou |
| 7,657,489 | B2 | 2/2010 | Stambaugh |
| 7,677,973 | B2 | 3/2010 | Van Luchene |
| 7,680,324 | B2 | 3/2010 | Boncyk |
| 7,689,506 | B2 | 3/2010 | Fei et al. |
| 7,694,876 | B2 | 4/2010 | Barnes et al. |
| 7,699,218 | B2 | 4/2010 | Garcia et al. |
| 7,708,194 | B2 | 5/2010 | Vawter |
| 7,729,963 | B1 | 6/2010 | Lego et al. |
| 7,729,987 | B1 | 6/2010 | Wakim et al. |
| 7,748,618 | B2 | 7/2010 | Vawter |
| 7,774,076 | B2 | 8/2010 | Skowronek |
| 7,774,231 | B2 | 8/2010 | Pond et al. |
| 7,775,437 | B2 | 8/2010 | Cohen |
| 7,784,684 | B2 | 8/2010 | Labrou et al. |
| 7,801,826 | B2 | 9/2010 | Labrou et al. |
| 7,819,307 | B2 | 10/2010 | Lyons |
| 7,822,688 | B2 | 10/2010 | Labrou |
| 7,823,772 | B2 | 11/2010 | Vawter |
| 7,848,500 | B2 | 12/2010 | Lynam |
| 7,848,504 | B2 | 12/2010 | Lynam |
| 7,865,414 | B2 | 1/2011 | Fung et al. |
| 7,865,431 | B2 | 1/2011 | Takayama |
| 7,877,605 | B2 | 1/2011 | Labrou et al. |
| 7,881,529 | B2 | 2/2011 | Boncyk |
| 7,886,962 | B2 | 2/2011 | Vawter |
| 7,890,424 | B1 | 2/2011 | Wakim et al. |
| 7,899,243 | B2 | 3/2011 | Boncyk |
| 7,899,252 | B2 | 3/2011 | Boncyk |
| 7,937,302 | B1 | 5/2011 | Lego et al. |
| 7,937,305 | B1 | 5/2011 | Lego et al. |
| 7,942,317 | B2 | 5/2011 | Racz et al. |
| 7,958,052 | B2 | 6/2011 | Powell |
| 7,967,196 | B1 | 6/2011 | Bierbaum |
| 7,979,026 | B2 | 7/2011 | Hulvey |
| 7,988,060 | B2 | 8/2011 | Killian et al. |
| 8,016,185 | B2 | 9/2011 | Modi |
| 8,019,365 | B2 | 9/2011 | Fisher |
| 8,033,458 | B2 | 10/2011 | Hulst et al. |
| 8,041,338 | B2 | 10/2011 | Chen |
| 8,052,042 | B2 | 11/2011 | Kolinski-Schultz et al. |
| 8,060,012 | B2 | 11/2011 | Sklovsky |
| 8,061,598 | B2 | 11/2011 | Racz et al. |
| 8,073,783 | B2 | 12/2011 | Felsted et al. |
| 8,077,042 | B2 | 12/2011 | Peeters |
| 8,090,945 | B2 | 1/2012 | Singhal |
| 8,095,113 | B2 | 1/2012 | Kean |
| 8,116,734 | B2 | 2/2012 | Vawter |
| 8,116,773 | B2 | 2/2012 | Chitrapu |
| 8,118,221 | B2 | 2/2012 | Racz et al. |
| 8,121,945 | B2 | 2/2012 | Rackley |
| 8,130,242 | B2 | 3/2012 | Cohen |
| 8,145,568 | B2 | 3/2012 | Rackley |
| 8,160,959 | B2 | 4/2012 | Rackley |
| 8,170,485 | B2 | 5/2012 | Hulvey |
| 8,190,087 | B2 | 5/2012 | Fisher |
| 8,195,576 | B1 | 6/2012 | Grigg |
| 8,196,131 | B1 | 6/2012 | von Behren |
| 8,213,470 | B2 | 7/2012 | Gu et al. |
| 8,218,873 | B2 | 7/2012 | Boncyk |
| 8,229,354 | B2 | 7/2012 | Sklovsky |
| 8,239,325 | B2 | 8/2012 | Schwarz |
| 8,275,312 | B2 | 9/2012 | Fisher |
| 8,290,433 | B2 | 10/2012 | Fisher |
| 8,332,272 | B2 | 12/2012 | Fisher |
| 8,333,319 | B2 | 12/2012 | Roth |
| 8,336,772 | B2 | 12/2012 | Racz et al. |
| 8,352,323 | B2 | 1/2013 | Fisher |
| 8,355,670 | B2 | 1/2013 | White |
| 8,359,265 | B2 | 1/2013 | Van Rensburg |
| 8,360,329 | B2 | 1/2013 | Grigg |
| 8,374,916 | B2 | 2/2013 | White |
| 8,380,177 | B2 | 2/2013 | Laracey |
| 8,396,793 | B2 | 3/2013 | Hill |
| 8,487,771 | B2 | 7/2013 | Hsieh et al. |
| 8,577,803 | B2 | 11/2013 | Chatterjee et al. |
| 8,612,325 | B2 | 11/2013 | Laracey |
| 8,632,000 | B2 | 1/2014 | Laracey |
| 2001/0011248 | A1 | 8/2001 | Himmel |
| 2001/0037264 | A1 | 11/2001 | Husemann |
| 2001/0042785 | A1 | 11/2001 | Walker et al. |
| 2002/0042776 | A1 | 4/2002 | Woo et al. |
| 2002/0052754 | A1 | 5/2002 | Joyce et al. |
| 2002/0060246 | A1 | 5/2002 | Gobburu |
| 2002/0065774 | A1 | 5/2002 | Young et al. |
| 2002/0069123 | A1 | 6/2002 | Soderlind et al. |
| 2002/0131404 | A1 | 9/2002 | Mehta et al. |
| 2002/0141586 | A1 | 10/2002 | Margalit |
| 2002/0152177 | A1 | 10/2002 | Wolf |
| 2002/0161708 | A1 | 10/2002 | Offer |
| 2003/0001010 | A1 | 1/2003 | Schmidt et al. |
| 2003/0055735 | A1 | 3/2003 | Cameron |
| 2003/0071115 | A1 | 4/2003 | Horn et al. |
| 2003/0154165 | A1 | 8/2003 | Horn et al. |
| 2003/0195842 | A1 | 10/2003 | Reece |
| 2004/0117302 | A1 | 6/2004 | Weichert et al. |
| 2004/0181531 | A1 | 9/2004 | Becker |
| 2004/0205618 | A1 | 10/2004 | Sini |
| 2004/0235450 | A1 | 11/2004 | Rosenberg |
| 2004/0248554 | A1 | 12/2004 | Khan et al. |
| 2005/0070265 | A1 | 3/2005 | Korpinen |
| 2005/0080697 | A1 | 4/2005 | Foss, Jr. et al. |
| 2005/0187873 | A1 | 8/2005 | Labrou |
| 2005/0199709 | A1 | 9/2005 | Linlor |
| 2005/0222961 | A1 | 10/2005 | Staib |
| 2006/0116892 | A1 | 6/2006 | Grimes |
| 2006/0136901 | A1 | 6/2006 | Nichols |
| 2006/0165060 | A1 | 7/2006 | Dua |
| 2006/0179452 | A1 | 8/2006 | Amodeo et al. |
| 2006/0200427 | A1 | 9/2006 | Morrison et al. |
| 2006/0253335 | A1 | 11/2006 | Keena et al. |

(56) **References Cited**

U.S. PATENT DOCUMENTS

2006/0287004 A1 12/2006 Fuqua
2007/0033285 A1 2/2007 Shiigi
2007/0106564 A1 5/2007 Matotek et al.
2007/0123305 A1 5/2007 Chen
2007/0125838 A1 6/2007 Law et al.
2007/0125840 A1 6/2007 Law et al.
2007/0162471 A1 7/2007 Samuelsson
2007/0179885 A1 8/2007 Bird et al.
2007/0198432 A1 8/2007 Pitroda
2007/0203850 A1 8/2007 Singh et al.
2007/0241189 A1 10/2007 Slavin
2007/0244811 A1 10/2007 Tumminaro
2007/0255620 A1 11/2007 Tumminaro et al.
2007/0255652 A1 11/2007 Tumminaro et al.
2007/0255653 A1 11/2007 Tumminaro et al.
2007/0265984 A1 11/2007 Santhana
2008/0006685 A1 1/2008 Rackley
2008/0010191 A1 1/2008 Rackley
2008/0010196 A1 1/2008 Rackley
2008/0010204 A1 1/2008 Rackley
2008/0010215 A1 1/2008 Rackley
2008/0011825 A1 1/2008 Giordano et al.
2008/0017704 A1 1/2008 VanDeburg et al.
2008/0040265 A1 2/2008 Rackley
2008/0040285 A1 2/2008 Wankmueller
2008/0052192 A1 2/2008 Fisher
2008/0065490 A1 3/2008 Novick et al.
2008/0097851 A1 4/2008 Bemmel
2008/0126145 A1 5/2008 Rackley
2008/0126929 A1 5/2008 Bykov
2008/0143487 A1 6/2008 Hulvey
2008/0197190 A1 8/2008 Fujita
2008/0204358 A1 8/2008 Sato
2008/0208743 A1 8/2008 Arthur et al.
2008/0208744 A1 8/2008 Arthur et al.
2008/0208762 A1 8/2008 Arthur et al.
2008/0210751 A1 9/2008 Kim
2008/0249927 A1 10/2008 Rethorn
2008/0249928 A1 10/2008 Hill et al.
2008/0249930 A1 10/2008 Hill
2008/0249933 A1 10/2008 Rethorn
2008/0255947 A1 10/2008 Friedman
2008/0275779 A1 11/2008 Lakshminarayanan
2008/0281737 A1 11/2008 Fajardo
2009/0037326 A1 2/2009 Chitti
2009/0055322 A1 2/2009 Bykov
2009/0063312 A1 3/2009 Hurst
2009/0081989 A1 3/2009 Wuhrer
2009/0098854 A1 4/2009 Park
2009/0104888 A1 4/2009 Cox
2009/0106148 A1 4/2009 Prada
2009/0108015 A1 4/2009 Kreamer
2009/0119190 A1 5/2009 Realini
2009/0132362 A1 5/2009 Fisher
2009/0132392 A1 5/2009 Davis
2009/0138366 A1 5/2009 Bemmel et al.
2009/0144161 A1 6/2009 Fisher
2009/0156190 A1 6/2009 Fisher
2009/0157546 A1 6/2009 Garcia et al.
2009/0177578 A1 7/2009 Garcia et al.
2009/0177581 A1 7/2009 Garcia et al.
2009/0210308 A1 8/2009 Toomer
2009/0222353 A1 9/2009 Guest et al.
2009/0222358 A1 9/2009 Bednarek
2009/0234751 A1 9/2009 Chan et al.
2009/0248537 A1 10/2009 Sarkeshik
2009/0254440 A1 10/2009 Pharris
2009/0254479 A1 10/2009 Pharris
2009/0265272 A1 10/2009 Dill et al.
2009/0281904 A1 11/2009 Pharris
2009/0288012 A1 11/2009 Hertel
2009/0299844 A1 12/2009 Reilly
2009/0307132 A1 12/2009 Phillips
2010/0010964 A1 1/2010 Skowronek
2010/0023449 A1 1/2010 Skowronek
2010/0030651 A1 2/2010 Matotek et al.
2010/0044430 A1 2/2010 Song et al.
2010/0048226 A1 2/2010 Owen
2010/0049599 A1 2/2010 Owen
2010/0051685 A1 3/2010 Royyuru
2010/0057614 A1 3/2010 Rainey
2010/0057619 A1 3/2010 Weller et al.
2010/0057624 A1 3/2010 Hurt
2010/0063895 A1 3/2010 Dominguez et al.
2010/0088188 A1 4/2010 Kumar
2010/0125495 A1 5/2010 Smith
2010/0125510 A1 5/2010 Smith
2010/0151790 A1 6/2010 Hoeksel et al.
2010/0197326 A1 8/2010 Ngo
2010/0223110 A1 9/2010 Slavin
2010/0235283 A1 9/2010 Gerson
2010/0248710 A1 9/2010 Sklovsky
2010/0250356 A1 9/2010 Gillenson
2010/0250436 A1 9/2010 Loevenguth
2010/0260388 A1 10/2010 Garrett
2010/0333129 A1 12/2010 Alhadeff et al.
2011/0047016 A1 2/2011 Cook
2011/0057025 A1 3/2011 Denzer
2011/0087529 A1 4/2011 Angell
2011/0087610 A1 4/2011 Batada
2011/0105022 A1 5/2011 Vawter
2011/0113473 A1 5/2011 Corda
2011/0145049 A1 6/2011 Hertel
2011/0145149 A1 6/2011 Valdes
2011/0179113 A1 7/2011 Thomas
2011/0196788 A1 8/2011 Lu et al.
2011/0218911 A1 9/2011 Spodak
2011/0246284 A1 10/2011 Chaikin
2011/0250866 A1 10/2011 Fisher
2011/0251941 A1 10/2011 Dunwoody
2011/0258024 A1 10/2011 Prince
2011/0258115 A1 10/2011 Mulhim
2011/0276417 A1 11/2011 Campbell
2011/0295750 A1 12/2011 Rammal
2011/0302016 A1 12/2011 Haddad
2011/0302406 A1 12/2011 Machani
2011/0313924 A1 12/2011 Carell et al.
2011/0320243 A1 12/2011 Khan
2011/0320293 A1 12/2011 Khan
2011/0320294 A1 12/2011 Votaw
2011/0320345 A1 12/2011 Taveau
2012/0005076 A1 1/2012 Dessert
2012/0011058 A1 1/2012 Pitroda et al.
2012/0011063 A1 1/2012 Killian
2012/0028612 A1 2/2012 Hurst
2012/0029990 A1 2/2012 Fisher
2012/0047070 A1 2/2012 Pharris
2012/0074232 A1 3/2012 Spodak
2012/0078735 A1 3/2012 Bauer
2012/0079521 A1 3/2012 Garg et al.
2012/0084203 A1 4/2012 Mehew
2012/0095855 A1 4/2012 Sterling
2012/0095856 A1 4/2012 Sanjeev
2012/0122447 A1 5/2012 Craft
2012/0123841 A1 5/2012 Taveau
2012/0123868 A1 5/2012 Brudnicki
2012/0123880 A1 5/2012 Craft
2012/0123935 A1 5/2012 Brudnicki
2012/0123937 A1 5/2012 Spodak
2012/0143752 A1 6/2012 Wong
2012/0150669 A1 6/2012 Langley
2012/0158589 A1 6/2012 Katzin
2012/0171992 A1 7/2012 Cheong
2012/0172026 A1 7/2012 Kwon
2012/0172089 A1 7/2012 Bae
2012/0174189 A1 7/2012 Lim
2012/0191557 A1 7/2012 Fisher
2012/0191612 A1 7/2012 Spodak
2012/0196586 A1 8/2012 Grigg
2012/0197691 A1 8/2012 Grigg
2012/0197740 A1 8/2012 Grigg
2012/0197743 A1 8/2012 Grigg
2012/0197745 A1 8/2012 Fisher
2012/0197787 A1 8/2012 Grigg

(56) **References Cited**

U.S. PATENT DOCUMENTS

| | | | |
|---|---|---|---|
| 2012/0203610 | A1 | 8/2012 | Grigg et al. |
| 2012/0203632 | A1 | 8/2012 | Blum |
| 2012/0209688 | A1 | 8/2012 | Lamothe |
| 2012/0209749 | A1 | 8/2012 | Hammad |
| 2012/0215701 | A1 | 8/2012 | Mehta |
| 2012/0221421 | A1 | 8/2012 | Hammad |
| 2012/0221475 | A1 | 8/2012 | Grigg |
| 2012/0226610 | A1 | 9/2012 | Gill |
| 2012/0229647 | A1 | 9/2012 | Calman |
| 2012/0229657 | A1 | 9/2012 | Calman |
| 2012/0231424 | A1 | 9/2012 | Calman |
| 2012/0231425 | A1 | 9/2012 | Calman |
| 2012/0232937 | A1 | 9/2012 | Calman |
| 2012/0232977 | A1 | 9/2012 | Calman |
| 2012/0232983 | A1 | 9/2012 | Bertha |
| 2012/0245986 | A1 | 9/2012 | Regan et al. |
| 2012/0253852 | A1 | 10/2012 | Pourfallah |
| 2012/0259686 | A1 | 10/2012 | Yurrow |
| 2012/0259698 | A1 | 10/2012 | Yurrow |
| 2012/0259732 | A1 | 10/2012 | Sasankan |
| 2012/0265677 | A1 | 10/2012 | Rackley |
| 2012/0265685 | A1 | 10/2012 | Brudnicki |
| 2012/0271712 | A1 | 10/2012 | Katzin |
| 2012/0284131 | A1 | 11/2012 | Soffer |
| 2012/0286928 | A1 | 11/2012 | Mullen |
| 2012/0290376 | A1 | 11/2012 | Dryer |
| 2012/0290449 | A1 | 11/2012 | Mullen |
| 2012/0290478 | A1* | 11/2012 | Crofts ..... G06Q 20/322 705/44 |
| 2012/0293303 | A1 | 11/2012 | Khan |
| 2012/0296708 | A1 | 11/2012 | Bachmann |
| 2012/0296720 | A1 | 11/2012 | Pirillo |
| 2012/0296722 | A1 | 11/2012 | Gosavi |
| 2012/0296741 | A1 | 11/2012 | Dykes |
| 2012/0297204 | A1 | 11/2012 | Buer |
| 2012/0302204 | A1 | 11/2012 | Gupta |
| 2012/0303425 | A1 | 11/2012 | Katzin |
| 2012/0310720 | A1 | 12/2012 | Balsan |
| 2012/0310760 | A1 | 12/2012 | Phillips |
| 2012/0310824 | A1 | 12/2012 | Liberty |
| 2012/0310826 | A1 | 12/2012 | Chatterjee |
| 2012/0316950 | A1 | 12/2012 | LaPorte |
| 2012/0316951 | A1 | 12/2012 | Fisher |
| 2012/0316992 | A1 | 12/2012 | Oborne |
| 2012/0317019 | A1 | 12/2012 | Carnes |
| 2012/0323653 | A1 | 12/2012 | Fisher |
| 2012/0323664 | A1 | 12/2012 | Klems |
| 2012/0323670 | A1 | 12/2012 | Fisher |
| 2012/0323777 | A1 | 12/2012 | Liberty |
| 2012/0329394 | A1 | 12/2012 | Fisher |
| 2012/0330737 | A1 | 12/2012 | Liberty |
| 2012/0330792 | A1 | 12/2012 | Kashanian |
| 2013/0012125 | A1 | 1/2013 | Fisher |
| 2013/0012126 | A1 | 1/2013 | Fisher |
| 2013/0012131 | A1 | 1/2013 | Fisher |
| 2013/0013352 | A1 | 1/2013 | Fisher |
| 2013/0013353 | A1 | 1/2013 | Fisher |
| 2013/0013355 | A1 | 1/2013 | Fisher |
| 2013/0013432 | A1 | 1/2013 | Fisher |
| 2013/0013434 | A1 | 1/2013 | Fisher |
| 2013/0013490 | A1 | 1/2013 | Keller |
| 2013/0013498 | A1 | 1/2013 | Fisher |
| 2013/0013499 | A1 | 1/2013 | Kalgi |
| 2013/0013501 | A1 | 1/2013 | Rackley |
| 2013/0017784 | A1 | 1/2013 | Fisher |
| 2013/0018738 | A1 | 1/2013 | Faires |
| 2013/0018740 | A1 | 1/2013 | Fisher |
| 2013/0018742 | A1 | 1/2013 | Fisher |
| 2013/0018793 | A1 | 1/2013 | Wong |
| 2013/0023209 | A1 | 1/2013 | Fisher |
| 2013/0023294 | A1 | 1/2013 | Singh |
| 2013/0024220 | A1 | 1/2013 | Fisher |
| 2013/0024221 | A1 | 1/2013 | Fisher |
| 2013/0024223 | A1 | 1/2013 | Thomas |
| 2013/0024280 | A1 | 1/2013 | Fisher |
| 2013/0024364 | A1 | 1/2013 | Shrivastava et al. |
| 2013/0024371 | A1 | 1/2013 | Hariramani |
| 2013/0024372 | A1 | 1/2013 | Spodak |
| 2013/0024377 | A1 | 1/2013 | Stong |
| 2013/0029646 | A1 | 1/2013 | Chowdhury |
| 2013/0030828 | A1 | 1/2013 | Pourfallah |
| 2013/0030960 | A1 | 1/2013 | Kashanian |
| 2013/0030997 | A1 | 1/2013 | Spodak |
| 2013/0035035 | A1 | 2/2013 | Fisher |
| 2013/0035036 | A1 | 2/2013 | Fisher |
| 2013/0035037 | A1 | 2/2013 | Fisher |
| 2013/0035068 | A1 | 2/2013 | Fisher |
| 2013/0035069 | A1 | 2/2013 | Fisher |
| 2013/0035070 | A1 | 2/2013 | Fisher |
| 2013/0035071 | A1 | 2/2013 | Fisher |
| 2013/0035072 | A1 | 2/2013 | Fisher |
| 2013/0035087 | A1 | 2/2013 | Fisher |
| 2013/0035967 | A1 | 2/2013 | Fisher |
| 2013/0035968 | A1 | 2/2013 | Fisher |
| 2013/0035969 | A1 | 2/2013 | Fisher |
| 2013/0035970 | A1 | 2/2013 | Fisher |
| 2013/0040568 | A1 | 2/2013 | Fisher |
| 2013/0040569 | A1 | 2/2013 | Fisher |
| 2013/0041699 | A1 | 2/2013 | Fisher |
| 2013/0041700 | A1 | 2/2013 | Fisher |
| 2013/0041701 | A1 | 2/2013 | Roth |
| 2013/0041736 | A1 | 2/2013 | Coppinger |
| 2013/0041743 | A1 | 2/2013 | Coppinger |
| 2013/0041744 | A1 | 2/2013 | Coppinger |
| 2013/0041745 | A1 | 2/2013 | Coppinger |
| 2013/0041769 | A1 | 2/2013 | Fisher |
| 2013/0046608 | A1 | 2/2013 | Coppinger |
| 2013/0046634 | A1 | 2/2013 | Grigg |
| 2013/0046645 | A1 | 2/2013 | Grigg |
| 2013/0048723 | A1 | 2/2013 | King |
| 2013/0052952 | A1 | 2/2013 | Fisher |
| 2013/0054336 | A1 | 2/2013 | Graylin |
| 2013/0054337 | A1 | 2/2013 | Brendell |
| 2013/0054412 | A1 | 2/2013 | Brendell |
| 2013/0054441 | A1 | 2/2013 | Kamdar |
| 2013/0057392 | A1 | 3/2013 | Bullock |
| 2013/0060618 | A1 | 3/2013 | Barton |
| 2013/0073373 | A1 | 3/2013 | Fisher |
| 2013/0073458 | A1 | 3/2013 | Sherwin |
| 2013/0080228 | A1 | 3/2013 | Fisher |
| 2013/0080229 | A1 | 3/2013 | Fisher |
| 2013/0080230 | A1 | 3/2013 | Fisher |
| 2013/0080231 | A1 | 3/2013 | Fisher |
| 2013/0080232 | A1 | 3/2013 | Fisher |
| 2013/0080233 | A1 | 3/2013 | Fisher |
| 2013/0080240 | A1 | 3/2013 | Fisher |
| 2013/0080241 | A1 | 3/2013 | Fisher |
| 2013/0080329 | A1 | 3/2013 | Royyuru |
| 2013/0091012 | A1 | 4/2013 | Liberty |
| 2013/0238455 | A1 | 9/2013 | Laracey |
| 2013/0246141 | A1 | 9/2013 | Liberty |
| 2013/0246203 | A1 | 9/2013 | Laracey |
| 2013/0317928 | A1 | 11/2013 | Laracey |
| 2013/0332347 | A1 | 12/2013 | Liberty |
| 2014/0006048 | A1 | 1/2014 | Liberty |
| 2014/0201070 | A1 | 7/2014 | Liberty |

FOREIGN PATENT DOCUMENTS

| | | |
|---|---|---|
| CN | 101606400 | 12/2009 |
| CN | 102073958 | 5/2011 |
| DE | 10119808 | 9/2002 |
| EP | 1280115 | 1/2003 |
| EP | 2084921 | 4/2008 |
| JP | 2001297198 | 10/2001 |
| JP | 2001357164 | 12/2001 |
| JP | 2002-99716 | 4/2002 |
| KR | 10-2002-0065989 | 8/2002 |
| KR | 10-2003-0068603 | 8/2003 |
| KR | 10-2007-0092400 | 9/2007 |
| WO | 9834203 | 8/1998 |
| WO | 9913636 | 3/1999 |
| WO | 0171627 | 9/2001 |
| WO | 0197118 | 12/2001 |

(56) **References Cited**

FOREIGN PATENT DOCUMENTS

| | | |
|---|---|---|
| WO | 02071354 | 9/2002 |
| WO | 03012717 | 2/2003 |
| WO | 2004010393 | 1/2004 |
| WO | 2004023353 | 3/2004 |
| WO | 2004053640 | 6/2004 |
| WO | 2004088641 | 10/2004 |
| WO | 2005079254 | 9/2005 |
| WO | 2005086593 | 9/2005 |
| WO | 2007145500 | 12/2007 |
| WO | 2008008735 | 1/2008 |
| WO | 2012025824 | 3/2012 |
| WO | WO 2013009444 | 1/2013 |
| WO | WO 2013009446 | 1/2013 |
| WO | WO 2013025273 | 2/2013 |
| WO | WO 2013078176 | 5/2013 |
| WO | WO 2013166174 | 7/2013 |

OTHER PUBLICATIONS

Written Opinion for PCT/US2012/066013 dated Jan. 29, 2013.
Chen, Jiajun Jim et al. Short-range Wireless Technologies with Mobile Payments Systems. Proceedings of the 6th international conference on Electronic commerce [Online] 2004, pp. 649-656.
Labrou, Yannis et al. Wireless Wallet. Proceedings of the First Annual International Conference on Mobile and Ubiquitous Systems: Networking and Services [Online] 2004, pp. 1-10.
Motorola, Motorola M-Wallet Solution. [Online] 2006 http://www.motorola.com/networkoperators/pdfs/M-Wallet-Brochure.pdf (accessed Oct. 4, 2012).
Valcourt, E. et al., "Investigating Mobile Payment", Wireless and Mobile Computing, Networking and Communications, 2005. (WiMob'2005), IEEE International Conference on Aug. 22-24, 2005, vol. 4, pp. 29-36 vol. 4.
Gao, Jerry, et al., "P2P-Paid: A Peer-to-Peer Wireless Payment System", Proceedings of the 2005 Second IEEE International Workshop on Mobile Commerce and Services (WMCS'05) Jul. 2005, 10 pages.
Edwin, et al., "Technobiography", Oct. 2004, 29 pages.
U.S. Appl. No. 13/527,466, Dec. 4, 2013, Final Office Action.
U.S. Appl. No. 13/964,707, Feb. 24, 2014, Office Action.
International Search Report for PCT/US2012/040131 Dated Jan. 29, 2013.
Written Opinion for PCT/US2012/040131 dated Jan. 29, 2013.
U.S. Appl. No. 13/527,466, Apr. 15, 2013, Office Action.
U.S. Appl. No. 13/484,199, Jun. 7, 2013, Notice of Allowance.
U.S. Appl. No. 14/213,543, May 6, 2014, Office Action.
U.S. Appl. No. 14/341,605, filed Jul. 25, 2014, Liberty, Michael A.
European Search Report for EP12824344 dated Sep. 29, 2014.
Sykes, et al. "Securing Mobile Banking," Credit Union Management, Novemer 2010, vol. 33 No. 11; ISSN 0273-9267.
Clarke, Irvine III, "Emerging Value Propositions for M-commerce," *Journal of Business Strategies*, vol. 25, Issue 2, Fall 2008, p. 41-57; ISSN: 0887-2058.
Wei, et al., "Development of a Web-Based Mobile Airline Ticketing Model with Usability Features," 2005, Industrial Management + Data Systems; vol. 105 No. 9, ISSN: 0263-5577.
International Search Report and Written Opinion for PCT/US2012/43458 dated Aug. 17, 2012.
U.S. Appl. No. 13/528,720, Jun. 25, 2014, Office Action.
U.S. Appl. No. 13/964,707, Jul. 10, 2014, Office Action.
U.S. Appl. No. 13/527,466, Aug. 1, 2014, Office Action.
U.S. Appl. No. 13/528,720, Dec. 10, 2014, Final Office Action.
Liberty, Michael A. , International Search Report for PCT/US2012/043321 dated Sep. 6, 2012.
Liberty, Michael A., International Search Report for PCT/US2012/058849 dated Jan. 4, 2013.
Liberty, Michael A., Written Opinion for PCT/US2012/043321 dated Sep. 6, 2012.
Liberty, Michael A., Written Opinion for PCT/US2012/058849 dated Jan. 4, 2013.
International Search Report for PCT/US2013/039100 dated Aug. 23, 2013.
Written Opinion for PCT/US2013/039100 dated Aug. 23, 2013.
U.S. Appl. No. 14/012,822, Jan. 7, 2015, Final Office Action.
U.S. Appl. No. 14/012,822, Aug. 7, 2014, Office Action.
U.S. Appl. No. 13/964,707, Mar. 16, 2015, Final Office Action.
U.S. Appl. No. 14/213,543, Apr. 8, 2015, Office Action.
U.S. Appl. No. 13/874,192, Jul. 14, 2015, Office Action.
U.S. Appl. No. 13/527,466, Jul. 16, 2015, Office Action.
U.S. Appl. No. 13/528,720, Jul. 22, 2015, Office Action.

* cited by examiner

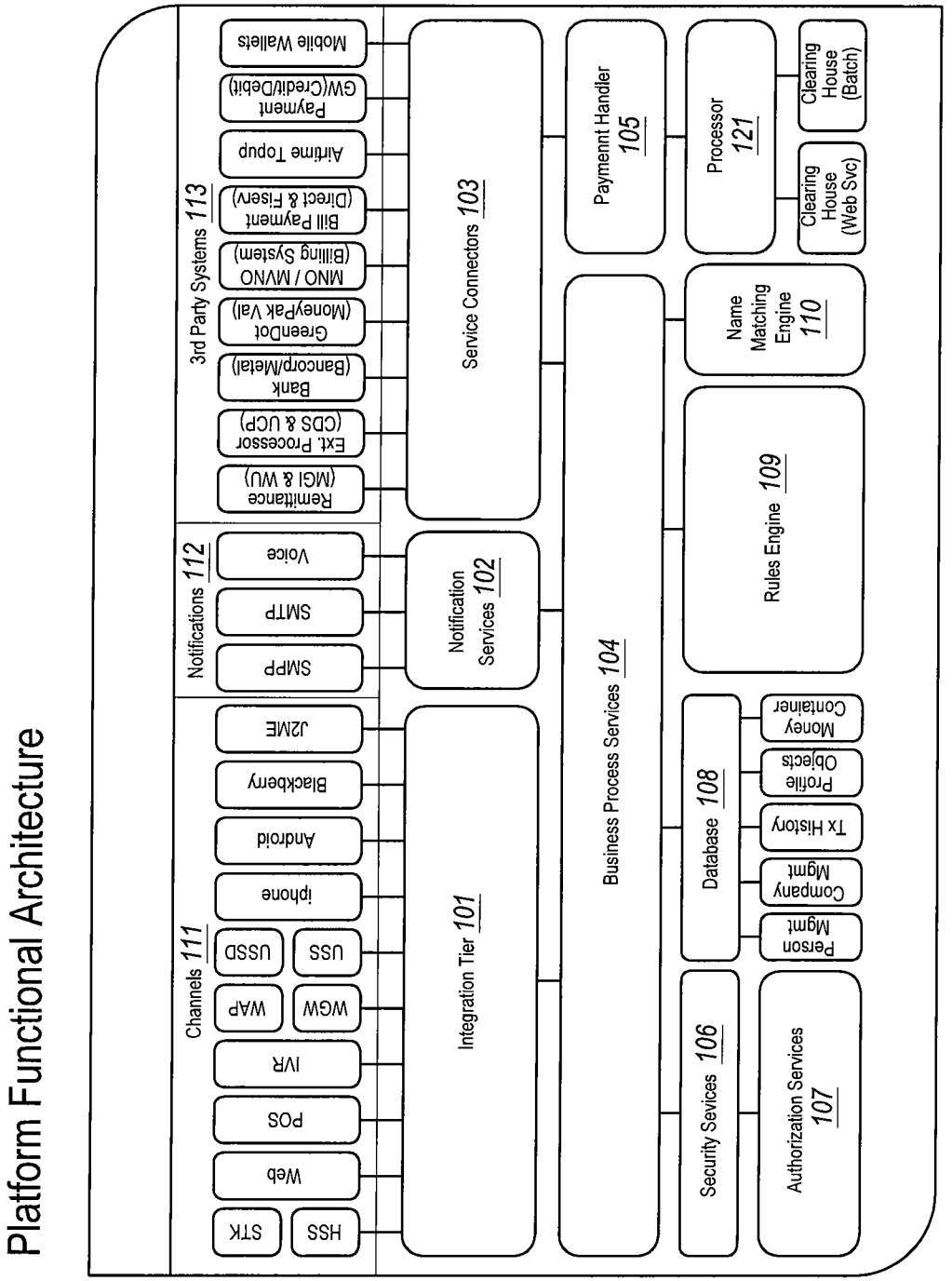
Platform Functional Architecture
Channels 111
STK
HSS
Web
POS
IVR
WAP
WGW
USSD
USS
iphone
Android
Blackberry
J2ME
Notifications 112
SMPP
SMTP
Voice
3rd Party Systems 113
Remittance (MGI & WU)
Ext. Processor (CDS & UCP)
Bank (Bancorp/Metal)
GreenDot (MoneyPak Val)
MNO / MVNO (Billing System)
Bill Payment (Direct & Fiserv)
Airtime Topup
Payment GW(Credit/Debit)
Mobile Wallets
Integration Tier 101
Notification Services 102
Service Connectors 103
Business Process Services 104
Paymennt Handler 105
Security Sevices 106
Authorization Services 107
Database 108
Person Mgmt
Company Mgmt
Tx History
Profile Objects
Money Container
Rules Engine 109
Name Matching Engine 110
Processor 121
Clearing House (Web Svc)
Clearing House (Batch)

FIG. 1

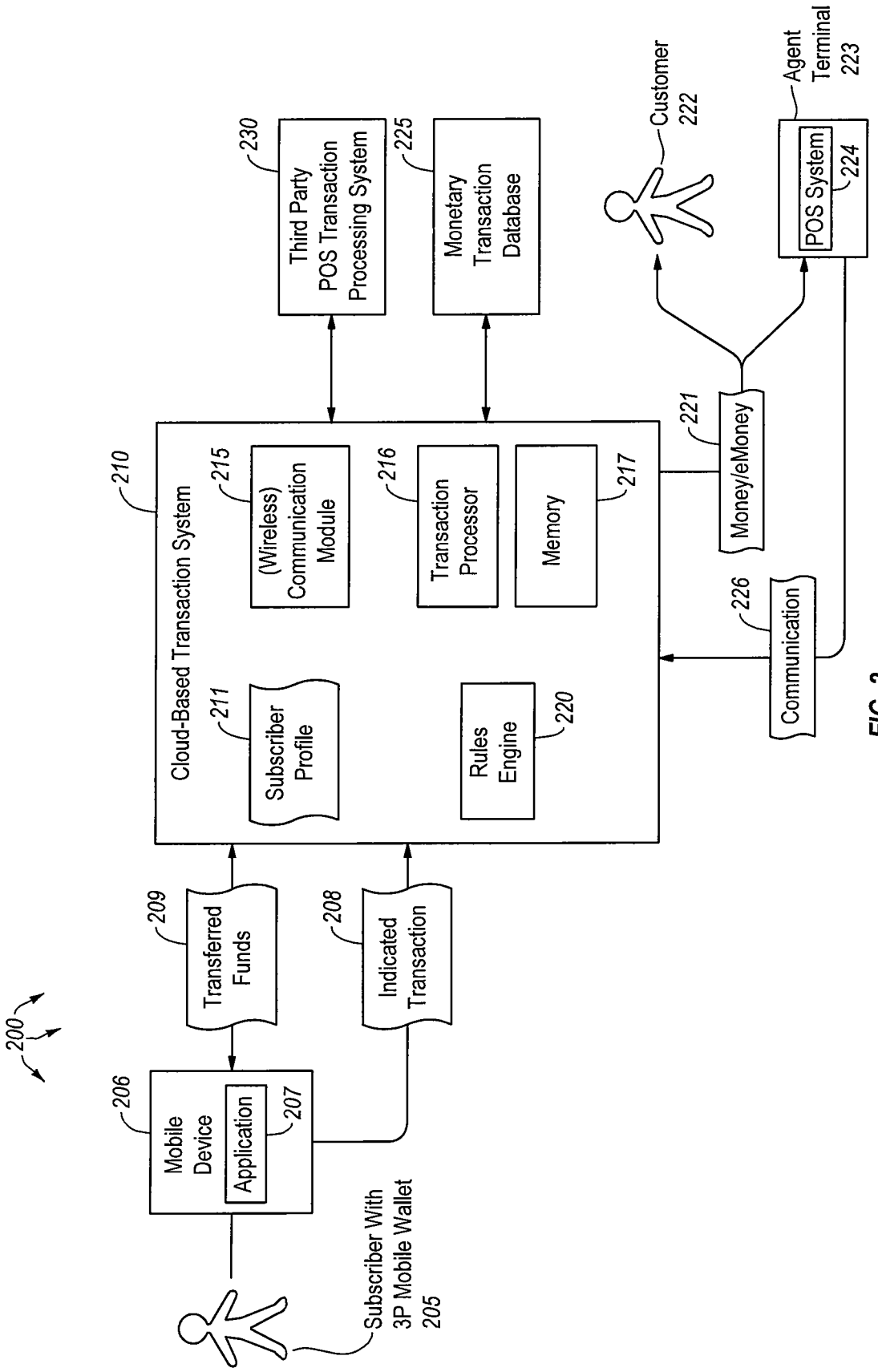
200
206
Mobile Device
Application
207
Subscriber With 3P Mobile Wallet 205
209
Transferred Funds
208
Indicated Transaction
210
Cloud-Based Transaction System
211
Subscriber Profile
215
(Wireless) Communication Module
216
Transaction Processor
217
Memory
220
Rules Engine
230
Third Party POS Transaction Processing System
225
Monetary Transaction Database
Customer 222
221
Money/eMoney
226
Communication
Agent Terminal 223
POS System
224

FIG. 2

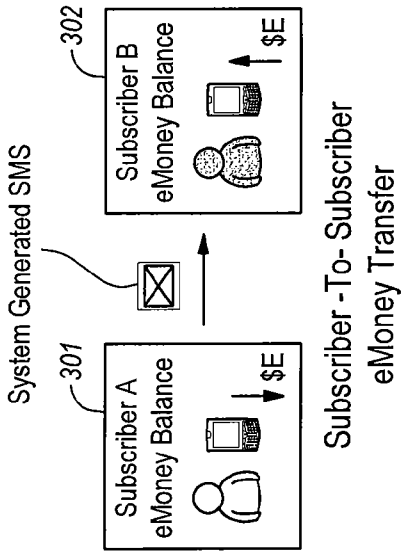
System Generated SMS
301
Subscriber A
eMoney Balance
$E
302
Subscriber B
eMoney Balance
$E
Subscriber -To- Subscriber
eMoney Transfer

FIG. 3A

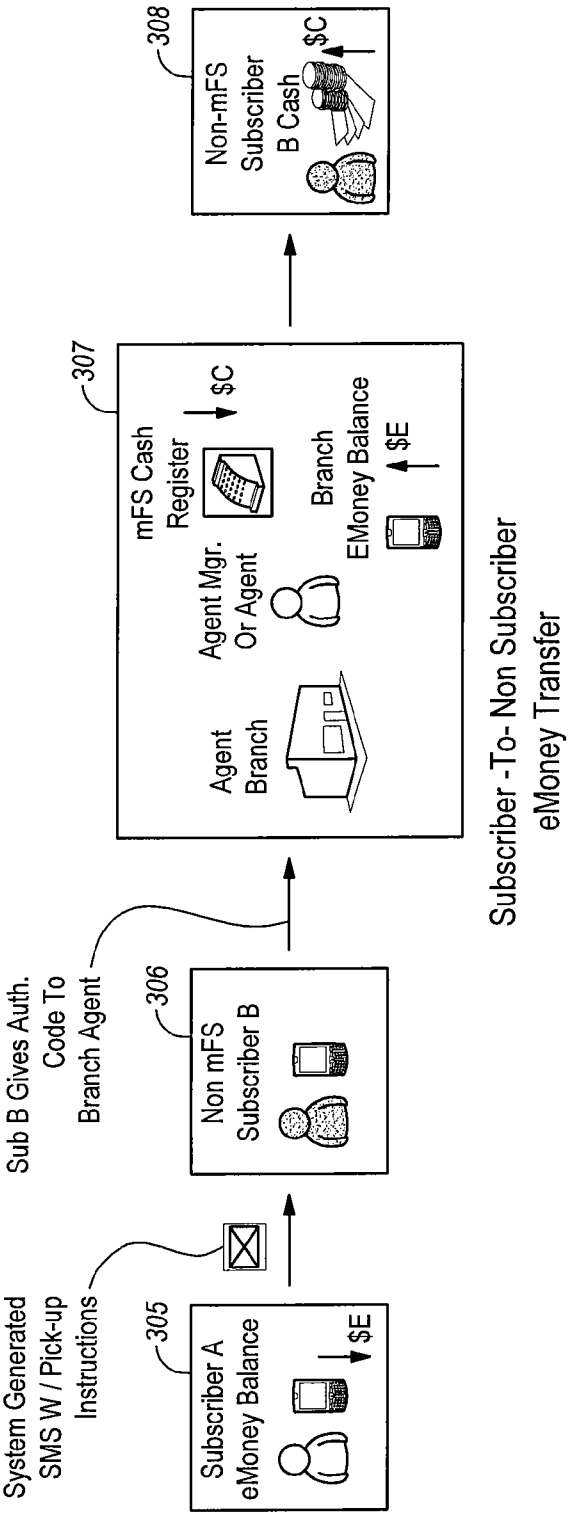
System Generated
SMS W / Pick-up
Instructions
305
Subscriber A
eMoney Balance
$E
Sub B Gives Auth.
Code To
Branch Agent
306
Non mFS
Subscriber B
307
mFS Cash
Register
$C
Agent Mgr.
Or Agent
Branch
EMoney Balance
$E
Agent
Branch
308
Non-mFS
Subscriber
B Cash
$C
Subscriber -To- Non Subscriber
eMoney Transfer

FIG. 3B

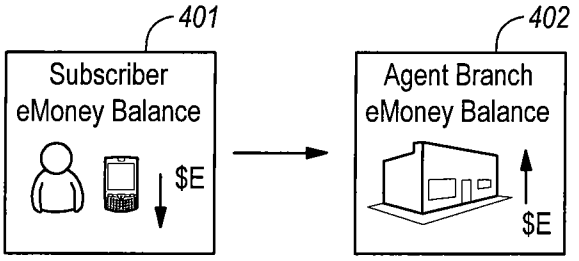


Subscriber Makes Retail Purchase

*FIG. 4*

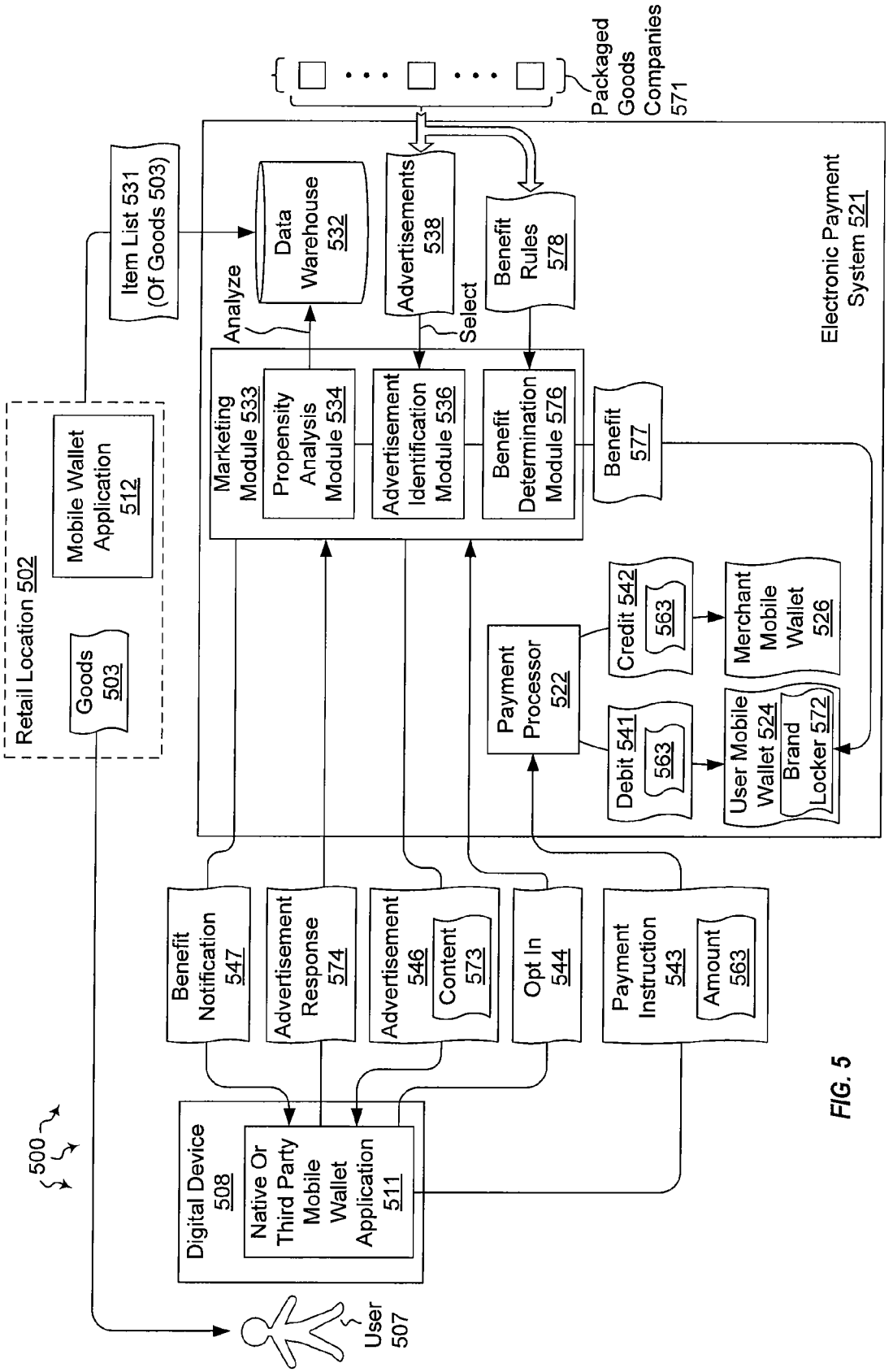
Packaged Goods Companies 571
Item List 531 (Of Goods 503)
Data Warehouse 532
Advertisements 538
Benefit Rules 578
Analyze
Select
Electronic Payment System 521
Retail Location 502
Mobile Wallet Application 512
Goods 503
Marketing Module 533
Propensity Analysis Module 534
Advertisement Identification Module 536
Benefit Determination Module 576
Benefit 577
Payment Processor 522
Credit 542
563
Merchant Mobile Wallet 526
Debit 541
563
User Mobile Wallet 524
Brand Locker 572
Benefit Notification 547
Advertisement Response 574
Advertisement 546
Content 573
Opt In 544
Payment Instruction 543
Amount 563
500
Digital Device 508
Native Or Third Party Mobile Wallet Application 511
User 507

FIG. 5

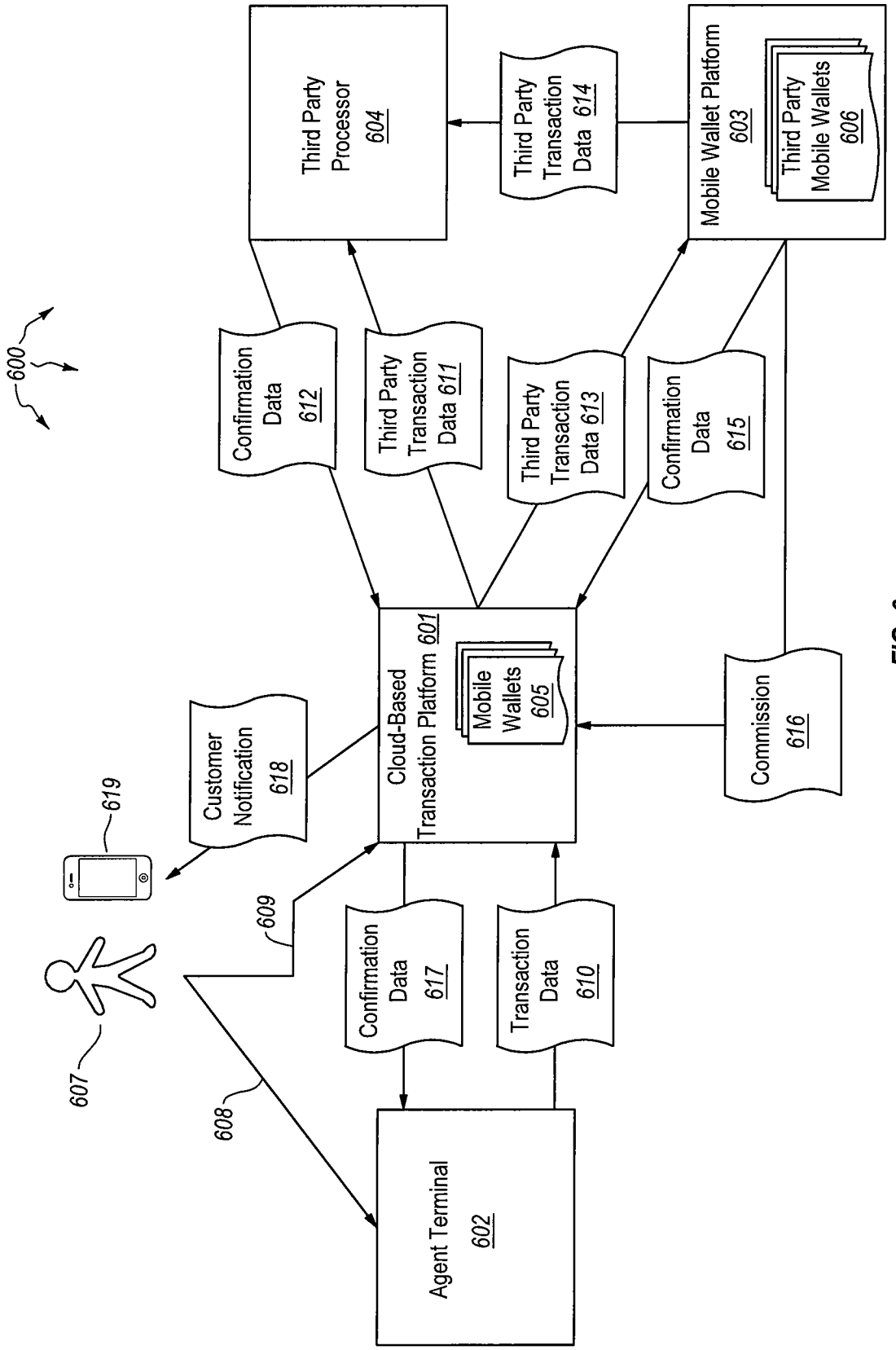
600
Third Party Processor 604
Third Party Transaction Data 614
Mobile Wallet Platform 603
Third Party Mobile Wallets 606
Confirmation Data 612
Third Party Transaction Data 611
Third Party Transaction Data 613
Confirmation Data 615
Cloud-Based Transaction Platform 601
Mobile Wallets 605
Commission 616
Customer Notification 618
619
609
607
608
Confirmation Data 617
Transaction Data 610
Agent Terminal 602

FIG. 6

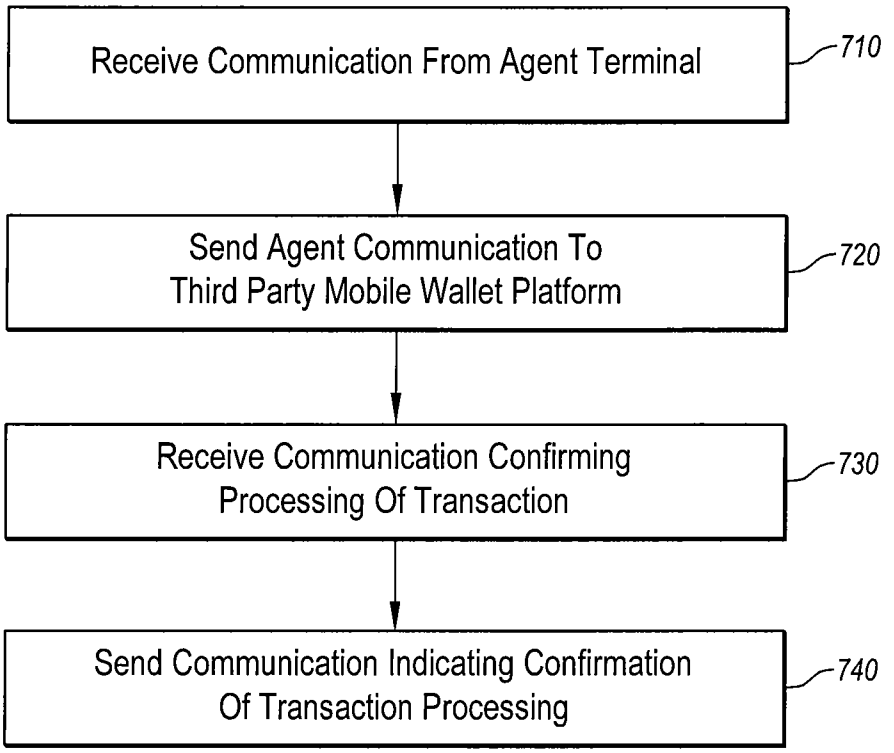
Receive Communication From Agent Terminal
710
Send Agent Communication To Third Party Mobile Wallet Platform
720
Receive Communication Confirming Processing Of Transaction
730
Send Communication Indicating Confirmation Of Transaction Processing
740

*FIG. 7*

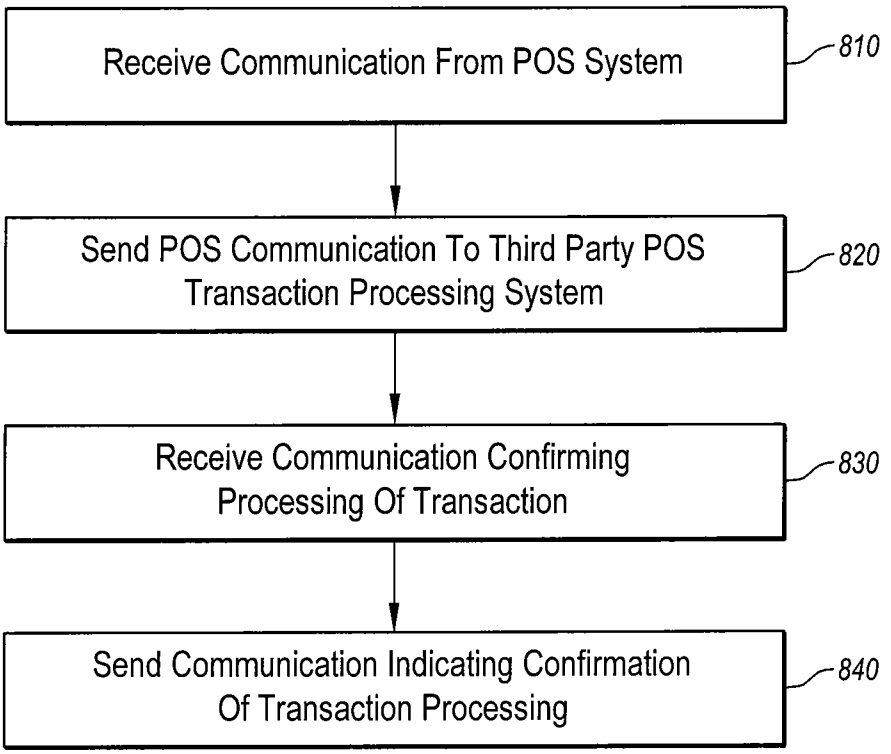
Receive Communication From POS System
810
Send POS Communication To Third Party POS Transaction Processing System
820
Receive Communication Confirming Processing Of Transaction
830
Send Communication Indicating Confirmation Of Transaction Processing
840

*FIG. 8*

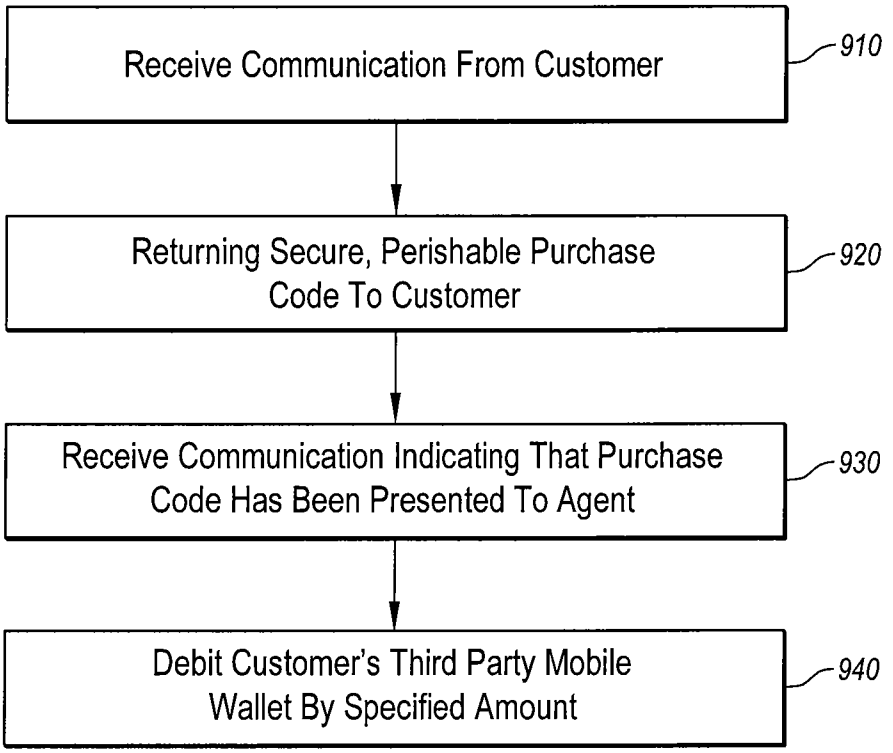
Receive Communication From Customer
910
Returning Secure, Perishable Purchase Code To Customer
920
Receive Communication Indicating That Purchase Code Has Been Presented To Agent
930
Debit Customer's Third Party Mobile Wallet By Specified Amount
940

*FIG. 9*

# USING A MOBILE WALLET INFRASTRUCTURE TO SUPPORT MULTIPLE MOBILE WALLET PROVIDERS

## CROSS-REFERENCE TO RELATED APPLICATIONS

This application claims priority to and the benefit of U.S. Provisional Application Ser. No. 61/562,301, entitled "Using a Mobile Wallet Infrastructure to Support Multiple Mobile Wallet Providers", filed on Nov. 21, 2011, which is herein incorporated by reference in its entirety.

## BACKGROUND

Mobile phones and other digital devices have become increasingly popular in recent years. Many mobile device users use their devices to perform countless different daily tasks. For instance, mobile devices allow users to check email, send and receive instant messages, check calendar items, take notes, set up reminders, browse the internet, play games or perform any number of different things using specialized applications or "apps". These applications allow mobile devices to communicate with other computer systems and perform a wide variety of network-connected tasks previously not possible with a mobile device.

## BRIEF SUMMARY

Embodiments described herein extend to methods, systems, and computer program products for a cloud-based transaction platform. Embodiments include an infrastructure that can be used with third party mobile wallets provided by third party mobile wallet providers. Users with native or third party mobile wallets can use the cloud-based transaction platform to enroll a customer for a third party mobile wallet, add a stored value account (either hosted by the cloud-based transaction platform or a third party), add a bank/credit union account to a third party mobile wallet, add a debit/credit card account to a third party mobile wallet, deposit funds in a third party mobile wallet, withdraw funds from a third party mobile wallet, pay bills from a third party mobile wallet, top up a prepaid mobile account through a third party mobile wallet, transfer funds through a third party mobile wallet, and make in store purchases from a third party mobile wallet.

Embodiments described herein are directed to performing a transaction using a third party mobile wallet, performing a transaction using a third party point of sale (POS) system and to making a purchase from a third party mobile wallet provided by a third party mobile wallet provider. In one embodiment, a cloud-based transaction platform is provided, which receives communication from an agent terminal over a communication channel connected to the cloud-based transaction platform. The agent communication indicates that a customer desires to perform a mobile wallet transaction using their third party mobile wallet. The cloud-based transaction platform sends the agent communication to a third party mobile wallet platform, receives communication from the third party mobile wallet platform confirming processing of the transaction, and sends communication to the agent terminal over a communication channel connected to the cloud-based transaction platform, where the communication indicates confirmation of the processing of the transaction.

In another embodiment, a cloud-based transaction platform performs a transaction using a third party point of sale (POS) system. The cloud-based transaction platform receives communication from a specified POS system implemented at



an agent terminal over a communication channel connected to the cloud-based transaction platform. The POS communication indicates that a customer has initiated a mobile wallet transaction using their third party mobile wallet. The cloud-based transaction platform sends the POS communication to a corresponding third party POS transaction processing system that has been established to process POS transactions from the specified POS system, receives communication from the third party POS transaction processing system confirming processing of the transaction, and sends communication to the specified POS system implemented at the agent terminal over a communication channel connected to the cloud-based transaction platform, where the communication indicates confirmation of the processing of the transaction.

In yet another embodiment, a cloud-based transaction platform is provided which allows users to make purchases from a third party mobile wallet provided by a third party mobile wallet provider. The cloud-based transaction platform receives communication from a customer over a communication channel connected to the cloud-based transaction platform. The customer communication indicates that a customer desires to purchase an item for a specified amount of funds using a specified payment method indicated by the customer's third party mobile wallet. The cloud-based transaction platform returns a secure, perishable purchase code to the customer over at least one the communication channels connected to the cloud-based transaction platform and receives communication from an agent terminal over a communication channel connected to the cloud-based transaction platform. The agent terminal communication indicates that the purchase code has been presented to an agent. The cloud-based transaction platform then debits the customer's third party mobile wallet by the specified amount of funds to complete the purchase.

This Summary is provided to introduce a selection of concepts in a simplified form that are further described below in the Detailed Description. This Summary is not intended to identify key features or essential features of the claimed subject matter, nor is it intended to be used as an aid in determining the scope of the claimed subject matter.

Additional features and advantages will be set forth in the description which follows, and in part will be apparent to one of ordinary skill in the art from the description, or may be learned by the practice of the teachings herein. Features and advantages of embodiments described herein may be realized and obtained by means of the instruments and combinations particularly pointed out in the appended claims. Features of the embodiments described herein will become more fully apparent from the following description and appended claims.

## BRIEF DESCRIPTION OF THE DRAWINGS

To further clarify the above and other features of the embodiments described herein, a more particular description will be rendered by reference to the appended drawings. It is appreciated that these drawings depict only examples of the embodiments described herein and are therefore not to be considered limiting of its scope. The embodiments will be described and explained with additional specificity and detail through the use of the accompanying drawings in which:

FIG. **1** illustrates a monetary transaction system architecture in which embodiments described herein may operate.

FIG. **2** illustrates an example embodiment of a cloud-based transaction platform.

FIGS. **3**A and **3**B illustrate example data flows for performing subscriber-to-subscriber and subscriber-to-non-subscriber eMoney transfers via a mobile wallet, respectively.

FIG. **4** illustrates an example data flow for making a retail purchase using a mobile wallet.

FIG. **5** illustrates an example embodiment of a monetary transaction system architecture.

FIG. **6** illustrates an alternate example embodiment of a cloud-based transaction platform.

FIG. **7** illustrates an example embodiment data flow for performing a transaction using a third party mobile wallet.

FIG. **8** illustrates an example embodiment data flow for performing a transaction using a third party point of sale (POS) system.

FIG. **9** illustrates an example embodiment data flow for making a purchase from a third party mobile wallet provided by a third party mobile wallet provider.

## DETAILED DESCRIPTION

Embodiments described herein extend to methods, systems, and computer program products for a cloud-based transaction platform. Embodiments include an infrastructure that can be used with third party mobile wallets provided by third party mobile wallet providers. Users with native or third party mobile wallets can use the cloud-based transaction platform to enroll a customer for a third party mobile wallet, add a stored value account (either hosted by the cloud-based transaction platform or a third party), add a bank/credit union account to a third party mobile wallet, add a debit/credit card account to a third party mobile wallet, deposit funds in a third party mobile wallet, withdraw funds from a third party mobile wallet, pay bills from a third party mobile wallet, top up a prepaid mobile account through a third party mobile wallet, transfer funds through a third party mobile wallet, and make in store purchases from a third party mobile wallet.

Embodiments described herein are directed to performing a transaction using a third party mobile wallet, performing a transaction using a third party point of sale (POS) system and to making a purchase from a third party mobile wallet provided by a third party mobile wallet provider. In one embodiment, a cloud-based transaction platform is provided, which receives communication from an agent terminal over a communication channel connected to the cloud-based transaction platform. The agent communication indicates that a customer desires to perform a mobile wallet transaction using their third party mobile wallet. The cloud-based transaction platform sends the agent communication to a third party mobile wallet platform, receives communication from the third party mobile wallet platform confirming processing of the transaction, and sends communication to the agent terminal over a communication channel connected to the cloud-based transaction platform, where the communication indicates confirmation of the processing of the transaction.

In another embodiment, a cloud-based transaction platform performs a transaction using a third party point of sale (POS) system. The cloud-based transaction platform receives communication from a specified POS system implemented at an agent terminal over a communication channel connected to the cloud-based transaction platform. The POS communication indicates that a customer has initiated a mobile wallet transaction using their third party mobile wallet. The cloud-based transaction platform sends the POS communication to a corresponding third party POS transaction processing system that has been established to process POS transactions from the specified POS system, receives communication from the third party POS transaction processing system confirming processing of the transaction, and sends communication to the specified POS system implemented at the agent terminal over a communication channel connected to the cloud-based transaction platform, where the communication indicates confirmation of the processing of the transaction.

In yet another embodiment, a cloud-based transaction platform is provided which allows users to make purchases from a third party mobile wallet provided by a third party mobile wallet provider. The cloud-based transaction platform receives communication from a customer over a communication channel connected to the cloud-based transaction platform. The customer communication indicates that a customer desires to purchase an item for a specified amount of funds using a specified payment method indicated by the customer's third party mobile wallet. The cloud-based transaction platform returns a secure, perishable purchase code to the customer over at least one the communication channels connected to the cloud-based transaction platform and receives communication from an agent terminal over a communication channel connected to the cloud-based transaction platform. The agent terminal communication indicates that the purchase code has been presented to an agent. The cloud-based transaction platform then debits the customer's third party mobile wallet by the specified amount of funds to complete the purchase. Such purchases may be for items that are provided by the cloud-based transaction platform, either directly or via a third-party provider. These items may include music, movies, games and other downloadable content, physical items that can be shipped to the user and other items such as health care services.

Embodiments described herein may comprise or utilize a special purpose or general-purpose computer including computer hardware, such as, for example, one or more processors and system memory, as discussed in greater detail below. Embodiments described herein also include physical and other computer-readable media for carrying or storing computer-executable instructions and/or data structures. Such computer-readable media can be any available media that can be accessed by a general purpose or special purpose computer system. Computer-readable media that store computer-executable instructions in the form of data are computer storage media. Computer-readable media that carry computer-executable instructions are transmission media. Thus, by way of example, and not limitation, embodiments described herein can comprise at least two distinctly different kinds of computer-readable media: computer storage media and transmission media.

Computer storage media includes RAM, ROM, EEPROM, CD-ROM, solid state drives (SSDs) that are based on RAM, Flash memory, phase-change memory (PCM), or other types of memory, or other optical disk storage, magnetic disk storage or other magnetic storage devices, or any other medium which can be used to store desired program code means in the form of computer-executable instructions, data or data structures and which can be accessed by a general purpose or special purpose computer.

A "network" is defined as one or more data links and/or data switches that enable the transport of electronic data between computer systems and/or modules and/or other electronic devices. When information is transferred or provided over a network (either hardwired, wireless, or a combination of hardwired or wireless) to a computer, the computer properly views the connection as a transmission medium. Transmission media can include a network which can be used to carry data or desired program code means in the form of computer-executable instructions or in the form of data structures and which can be accessed by a general purpose or

special purpose computer. Combinations of the above should also be included within the scope of computer-readable media.

Further, upon reaching various computer system components, program code means in the form of computer-executable instructions or data structures can be transferred automatically from transmission media to computer storage media (or vice versa). For example, computer-executable instructions or data structures received over a network or data link can be buffered in RAM within a network interface module (e.g., a network interface card or "NIC"), and then eventually transferred to computer system RAM and/or to less volatile computer storage media at a computer system. Thus, it should be understood that computer storage media can be included in computer system components that also (or even primarily) utilize transmission media.

Computer-executable (or computer-interpretable) instructions comprise, for example, instructions which cause a general purpose computer, special purpose computer, or special purpose processing device to perform a certain function or group of functions. The computer executable instructions may be, for example, binaries, intermediate format instructions such as assembly language, or even source code. Although the subject matter has been described in language specific to structural features and/or methodological acts, it is to be understood that the subject matter defined in the appended claims is not necessarily limited to the described features or acts described above. Rather, the described features and acts are disclosed as example forms of implementing the claims.

Those skilled in the art will appreciate that various embodiments may be practiced in network computing environments with many types of computer system configurations, including personal computers, desktop computers, laptop computers, message processors, hand-held devices, multi-processor systems, microprocessor-based or programmable consumer electronics, network PCs, minicomputers, mainframe computers, mobile telephones, PDAs, tablets, pagers, routers, switches, and the like. Embodiments described herein may also be practiced in distributed system environments where local and remote computer systems that are linked (either by hardwired data links, wireless data links, or by a combination of hardwired and wireless data links) through a network, each perform tasks (e.g. cloud computing, cloud services and the like). In a distributed system environment, program modules may be located in both local and remote memory storage devices.

In this description and the following claims, "cloud computing" is defined as a model for enabling on-demand network access to a shared pool of configurable computing resources (e.g., networks, servers, storage, applications, and services). The definition of "cloud computing" is not limited to any of the other numerous advantages that can be obtained from such a model when properly deployed.

For instance, cloud computing is currently employed in the marketplace so as to offer ubiquitous and convenient on-demand access to the shared pool of configurable computing resources. Furthermore, the shared pool of configurable computing resources can be rapidly provisioned via virtualization and released with low management effort or service provider interaction, and then scaled accordingly.

A cloud computing model can be composed of various characteristics such as on-demand self-service, broad network access, resource pooling, rapid elasticity, measured service, and so forth. A cloud computing model may also come in the form of various service models such as, for example, Software as a Service ("SaaS"), Platform as a Service ("PaaS"), and Infrastructure as a Service ("IaaS"). The cloud computing model may also be deployed using different deployment models such as private cloud, community cloud, public cloud, hybrid cloud, and so forth. In this description and in the claims, a "cloud computing environment" is an environment in which cloud computing is employed.

Additionally or alternatively, the functionally described herein can be performed, at least in part, by one or more hardware logic components. For example, and without limitation, illustrative types of hardware logic components that can be used include Field-programmable Gate Arrays (FPGAs), Program-specific Integrated Circuits (ASICs), Program-specific Standard Products (ASSPs), System-on-a-chip systems (SOCs), Complex Programmable Logic Devices (CPLDs), and other types of programmable hardware.

Still further, system architectures described herein can include a plurality of independent components that each contribute to the functionality of the system as a whole. This modularity allows for increased flexibility when approaching issues of platform scalability and, to this end, provides a variety of advantages. System complexity and growth can be managed more easily through the use of smaller-scale parts with limited functional scope. Platform fault tolerance is enhanced through the use of these loosely coupled modules. Individual components can be grown incrementally as business needs dictate. Modular development also translates to decreased time to market for new functionality. New functionality can be added or subtracted without impacting the core system.

Various terminology will be used herein to describe the cloud-based transaction platform (also referred to as a "monetary transaction system", "mobile wallet platform", "mobile wallet program", "mobile wallet transaction system", "mobile financial services (mFS) platform" or "electronic payment system"). The term "agent" is used to refer to an individual with mFS transaction system tools and training to support specific mFS functions. These mFS functions include subscriber registration and activation, and the deposit and withdrawal of funds from the mFS transaction system. Agents are representatives of the mFS transaction system or "program". Agents can be employees or contractors of the program provider, or other companies and organizations that partner with the program provider to provide these services themselves. Agents may be found in every facet of a typical economy, and may include large retailers, mobile network operators (MNO) airtime sales agents, gas stations, kiosks, or other places of business.

The cloud-based transaction platform includes an infrastructure that allows native mobile wallet application and third party mobile wallet applications to interact both with the transaction system and with each other. This allows the user of a native or a third party mobile wallet to make purchases, transfer money or perform any of the other transactions described herein. The cloud-based transaction platform may include a mobile wallet application and a web interface or some other type of functionality that allows the user to interact with the cloud-based transaction platform using their mobile device. The native and third party mobile wallet applications may include a subscriber identity module (SIM) application, an Unstructured Supplementary Service Data (USSD) application, a smartphone application, a web application, a mobile web application, a Wireless Application Protocol (WAP) application, a Java 2 Platform, Micro Edition (J2ME) application, a tablet application or any other type of application or interface that provides tools for the agent to register, activate, and offer other services to the mFS subscriber.

As used herein, a mobile wallet application is a mobile wallet application installed on a SIM card or elsewhere on a mobile device. The mobile wallet application may either be native (i.e. provided by the provider of the cloud-based transaction platform) or third party (i.e. provided by a provider other than the provider of the cloud-based transaction platform).

A USSD application is an application that implements USSD for various functionality including prepaid callback service, location-based content services, menu-based information services and other mobile wallet platform services. A web application is one that implements or uses the internet to provide mobile wallet platform functionality. A mobile web application is similar to a web application, but is tailored for mobile devices. A WAP application is one that uses the wireless application protocol to communicate with the mobile wallet platform to provide the platform's functionality. A J2ME application is an application developed in Java and is designed to provide mobile wallet functionality on a variety of different hardware. A tablet application is an application specifically designed for a touchscreen-based tablet that provides mobile wallet platform functionality for tablet devices. Any of these applications (or any combination thereof) may be provided on the user's mobile device. This functionality can also be made available on a retail point of sale (POS) system or web site. Indeed, the cloud-based transaction platform allows different POS systems to interact with each other and conduct transactions between themselves.

The term "agent administrator" refers to an individual with mFS program tools and training to administrate the allocation of funds to agent branches (e.g. retail locations). As agents perform mFS transactions with subscribers, such as depositing and withdrawing money, the agents are adding and removing money from their own accounts. Any of the applications referred to above may be configured to provide tools used by the agent administrator to view the agent company balance, view the agent branch balances, and transfer funds into and out of agent branch mobile wallets. This functionality can also be made available on a website for easier access.

In some embodiments, the mFS platform application may utilize triple data encryption standard (3DES) encryption (or some other type of encryption), encrypted message signing, and password security on some or all of its communications with the mFS transaction system in order to ensure that the transactions are properly secured and authenticated.

The term "agent branch" refers to any location where an agent provides support for subscriber services of the mFS platform. Funds are allocated by the agent administrator from the agent company's main account to each agent branch to fund the subscriber mFS functions such as depositing or withdrawing cash, in-store purchases, bill payments, prepaid airtime top-ups and money transfers. In some cases, multiple agents may work in a single branch. However, at least in some cases, monetary funds are allocated to from the agent company's main account on a per branch basis.

The term "agent branch account balance" refers to the amount of money residing in a particular agent branch account at a given time. Funds can be deposited into the branch account by the agent administrator, or the funds can come from participating in subscriber mFS transactions such as depositing or withdrawing cash from the subscriber's mobile wallet accounts, or making retail purchases with the mobile wallet.

In some embodiments, in countries with more developed economies, it may be beneficial to use program-issued prepaid debit cards, pre-paid access accounts, stored value accounts or gift cards to conduct business along with the added convenience of card processing networks such as Cirrus, STAR, or Visa for POS and automated teller machine (ATM) functionality. Agents, particularly those in retail outlets and kiosks, can still support subscribers with deposits, withdrawals, and other transfers, but in this case bank external card processors manage the mobile wallet and branch account balances and provide the real-time transfer of funds.

The term "agent branch ledger" refers to a written (or electronic) ledger maintained by the mFS platform. Agent branch transactions are performed on the agent's and subscriber's mobile phones where an electronic record of the transaction is generated and stored on the mFS platform. These electronic transactions are then reconciled with agent branch ledgers to ensure the security and integrity of the transaction. Agent branch ledgers are printed or electronic transaction logs that are distributed to the agent branch locations in hard copy form to serve as a backup record to the electronic transactions.

The term "agent company" refers to a business that registers to participate in the mFS program as a partner of the mFS program provider or owner. The agent company has one or more agent branches which conduct mFS business with mFS program subscribers. In some cases, the agent company may be referred to as a distributor or retailer.

The term "agent company account balance" refers to the sum of the funds deposited at a "partner bank" (defined below) by the agent company to fund the agent company's daily transactions. The funds in the agent company account are then distributed to agent branches by the agent company's agent administrator to conduct everyday business such as accepting cash deposits and cash withdrawals from mFS subscribers. This balance is sometimes referred to as the "agent company float".

An "agent manager" is a supervisor of company agents for a given company. The agent manager has the training and tools to create, delete or modify agent accounts for a company, as well as monitor the transactions performed by agents. The agent manager may have a special application or an increased level of rights to access applications features not available to other users. The special application is a program installed on the agent manager's terminal. This application provides the agent manager the ability to securely perform agent manager functions such as registering and activating new agent accounts. The mFS agent manager application may be installed on any terminal or device. It communicates with the mFS platform using binary and/or text SMS messages. A wireless service provider or MNO provides the GSM SMS network infrastructure on which the mFS platform operates.

As subscribers, agents, and other mFS program participants conduct business in the mFS program, value is transferred from one account to the next as payment for services rendered or goods purchased. This value can be in the form of real currency or the electronic representation referred to herein as eMoney. Among other situations, eMoney is used in mFS implementations where the real-time processing of financial transactions including card processing is not practical. The mFS platform utilizes an internal transaction processor for managing the real-time balance of mobile wallet and agent accounts as value (eMoney) is transferred from one mobile wallet to another in payment for services.

The term "mFS program master account" refers to a bank account maintained by the mFS program partner bank to provide funds and float for the operation of the mFS platform. Depending on the type of mFS implementation, the master account can include sub-accounts for each of the agent branches and subscriber mobile wallets, giving the bank visibility into all transactions on a per-user basis. The mFS

platform can also manage the balance of sub-accounts and interact with the bank's master account when funds need to be deposited or withdrawn from the account.

The term mobile network operator (MNO) refers to a provider of mobile phone service including basic voice, SMS, unstructured supplementary service data (USSD) and data service, and may also be referred to as a "wireless service provider".

The term "mobile wallet" or "mobile wallet account" refers to a stored value account or prepaid access account (PPA) that allows the owner (or "subscriber") to pay for goods and services on the mFS platform from his or her mobile wallet account. When the mFS eMoney transaction processor is used, the mobile wallet balance is maintained by the mFS platform and value is exchanged within the mFS program as eMoney. When the mFS platform is integrated to an external card processor, the mobile wallet utilizes funds from the subscriber's prepaid debit card and bank account to exchange value on the mFS platform.

The term "partner bank" refers to the primary bank participating in the mFS program. The partner bank is responsible for holding the mFS program master accounts that hold the funds for all mFS services and transactions. A "PIN" refers to a numeric password that may be required to perform a transaction via the mobile wallet application.

The term "subscriber" refers to a participant of the mFS mobile wallet platform. The subscriber maintains a mobile wallet balance and performs transactions using the mFS application. An "unbanked subscriber" is a subscriber that does not have (or does not have access to) a bank account or credit union account. The application or "mobile wallet application" provides mobile wallet functionality to the (unbanked) subscriber. The mobile wallet application is installed on a mobile device in the device's memory, on a SIM card (such as a GSM SIM card) or is otherwise accessible to the mobile device. The mobile wallet application provides the subscriber the ability to securely perform subscriber functions such as making retail purchases, paying bills, or transferring money to other mFS subscribers and non-subscribers. The mobile wallet application communicates with the mFS platform using binary and text SMS messages, among other forms of wireless communication. A wireless service provider or MNO provides the GSM network infrastructure on which the mFS platform operates.

FIG. **1** illustrates an example system architecture for a cloud-based transaction platform. Integration tier **101** is configured to manage mobile wallet sessions and maintain integrity of financial transactions. Integration tier **101** can also include a communication (e.g., Web services) API and/or other communication mechanisms to accept messages from channels **111**. Other mechanisms include, but are not limited to: International Standards Organization ("ISO") 8583 for Point of Sale ("POS") and Automated Teller Machines ("ATM") devices and Advanced Message Queuing Protocol ("AMQP") for queue based interfaces. Each of channels **111** can be integrated to one or more mechanisms for sending messages to integration tier **101**. Notification services **102** is configured to send various notifications through different notification channels **112**, such as, for example, Short Message Peer-to-Peer ("SSMP") for Short Messaging Service ("SMS") and Simple Mail Transfer Protocol ("SMTP") for emails. Notification services **102** can be configured through a web services API.

Service connectors **103** are a set of connectors configure to connect to 3rd party systems **113**. Each connector can be a separate module intended to integrate an external service to the system architecture. Business process services **104** are configured to implement business workflows, including executing financial transactions, auditing financial transactions, invoking third-party services, handling errors, and logging platform objects. Payment handler **105** is configured to wrap APIs of different payment processors, such as, for example, banking accounts, credit/debit cards or processor **121**. Payment handler **105** exposes a common API to facilitate interactions with many different kinds of payment processors.

Security services **106** are configured to perform subscriber authentication. Authorization services **107** are configured to perform client authorization, such as, for example, using a database-based Access Control List ("ACL") table.

Database **108** is configured to manage customer accounts (e.g., storing customer accounts and properties), manage company accounts (e.g., storing company accounts and properties), manage transaction histories (e.g., storing financial transaction details), store customer profiles, storing dictionaries used by the mobile wallet platform, such as, for example, countries, currencies, etc., and managing money containers. Rules engine **109** is configured to gather financial transaction statistics and uses the statistics to provide transaction properties, such as, for example, fees and bonuses. Rules engine **109** is also configured to enforce business constraints, such as, for example, transactions and platform license constraints.

Name matching engine **110** is configured to match different objects according to specified configuration rules. Matching engine **110** can be used to find similarities between names, addresses, etc. Transaction processor **121** is configured to manage financial accounts and transactions. The transaction processor **121** can be used to hold, load, withdraw and deposit funds to mobile wallet accounts. Transaction processor **121** can also be used as a common interface to a third party processor system. When used as a common interface, financial operations may be delegated to the external processor. A Clearing House subsystem of transaction processor **121** can be used to exchange the financial information with a bank.

Components of a mobile wallet platform can be connected to one another over (or be part of) a system bus and/or a network. Networks can include a Local Area Network ("LAN"), a Wide Area Network ("WAN"), and even the Internet. Accordingly, components of the mobile wallet platform can be "in the cloud". As such, mobile wallet platform components as well as any other connected computer systems and their components, can create message related data and exchange message related data (e.g., Internet Protocol ("IP") datagrams and other higher layer protocols that utilize IP datagrams, such as, Transmission Control Protocol ("TCP"), Hypertext Transfer Protocol ("HTTP"), Simple Mail Transfer Protocol ("SMTP"), etc.) over the system bus and/or network.

The components depicted in FIG. **1** can interoperate to provide a number of financial and other services including but not limited to enrolling a customer for a mobile wallet, adding a stored value account (either hosted by a mobile wallet platform or a third party), adding a bank or credit union account to a third party mobile wallet, adding a debit or credit card account to a third party mobile wallet, depositing funds in a third party mobile wallet, withdrawing funds from a third party mobile wallet, paying bills from a third party mobile wallet, topping up a prepaid mobile account through a third party mobile wallet, transferring funds through a third party mobile wallet (nationally or internationally), making in-store purchases using a third party mobile wallet, selecting health care providers and paying for health care services, paying for music, games, movies or other downloadable provided by a

third party provider and made available over the cloud-based transaction system, and various other tasks as described herein below.

FIG. **2** depicts a monetary transaction architecture **200** similar to that described in FIG. **1**. The monetary transaction architecture **200** may provide a more simplified system structure in which each of the above services may be provided. The system includes a subscriber **205**. The subscriber may have access to a bank account, or may be an unbanked subscriber. The subscriber has a profile **211** with the cloud-based transaction system **210**. The profile includes the subscriber's know your customer (KYC) information, as well as any associated bank accounts, credit union accounts, bill pay accounts or other accounts. The subscriber has (or has access to) a mobile device **206** such as a phone or tablet. The mobile device runs the native or third party mobile wallet application **207**.

The subscriber can indicate, using the mobile wallet application **207**, which transaction or other action he or she would like to perform. The indicated transaction **208** is sent to the mobile wallet platform **210** to be carried out by the platform. The transaction processor **216** (which may be similar to or the same as transaction processor **121** of FIG. **1**) performs the transaction(s) specified by the (unbanked) subscriber **205**. The transaction processor may implement various other components to perform the transaction including memory **217**, (wireless) communication module **215**, rules engine **220** and/or a transaction database **225**.

Performing the specified transactions may include communicating with the monetary transaction database **225** to determine whether the transaction is permissible based on data indicated in the unbanked subscriber's profile (for instance, whether the subscriber has enough eMoney **221** in his or her stored value account, or has enough money in his or her bank account). Rules engine **220** may also be consulted to determine whether the subscriber has exceeded a specified number of allowed transactions. Then, if funds are available, and the transaction is otherwise permissible, the monetary transaction system can transfer money or eMoney **221** to or from an entity such as a user or agent (e.g. customer **222**) to or from an establishment such as an agent terminal (i.e. a retail store or agent company) **223**.

In some cases, the cloud-based transaction system **210** provides a web interface that allows subscribers of third party mobile wallet applications to perform the same functions provided for native subscribers. For instance, mobile wallet application **207** may provide a web interface that allows a user to enroll for a native or third party mobile wallet. The web interface (or the mobile wallet application itself) receives a subscriber-initiated transaction over one of a plurality of communication channels (**111** from FIG. **1**) connected to the cloud-based transaction system **210**. The web interface or mobile wallet application may prompt for and receive enrollment information (e.g. KYC information) for the (unbanked) subscriber **205** over at least one of the plurality of communication channels (e.g. web, point-of-sale (POS), interactive voice response (IVR, etc.). The web interface or mobile wallet application may then send activation instructions over the same or a different channel to activate the (unbanked) subscriber **205** and create a subscriber account for the (unbanked) subscriber.

Once the subscriber has an account, the cloud-based transaction system generates (or allows the third party provider to generate) a corresponding mobile wallet for the unbanked subscriber (available via the web interface and/or the mobile wallet application). The system then presents the (unbanked) subscriber's account data associated with the mobile wallet and/or a notification indicating that enrollment was successful to the subscriber. Accordingly, the mobile wallet application or the web interface may be used to provide user enrollment functionality. It should also be understood that either the mobile wallet application or the web interface may be used to provide substantially all of the third party or native mobile wallet functionality described herein.

It should also be noted that the mobile device **206** may be any type of plan-based phone or tablet, or prepaid phone or tablet. Many subscribers, such as unbanked subscribers, may primarily use prepaid phones. The mobile wallet application **207** may be installed on both plan-based phones and prepaid phones. The mobile wallet application may be installed on the device's SIM card, or on the device's main memory. Accordingly, the monetary transaction system **200** may be accessed and used via substantially any type of plan-based or prepaid mobile device.

The components depicted in FIG. **1** can interoperate to provide a number of financial and other services including but not limited to enrolling a customer for a third party mobile wallet, adding a stored value account (either hosted by an electronic payment system or a third party), adding a bank/credit union account to a third party mobile wallet, adding a debit/credit card account to a third party mobile wallet, depositing funds in a third party mobile wallet, withdrawing funds from a third party mobile wallet, paying bills from a third party mobile wallet, topping up a prepaid mobile account through a third party mobile wallet, transferring funds through a third party mobile wallet, making in store purchases from a third party mobile wallet, or transferring money or eMoney from one business account to another business account (i.e. from one business's mobile vault to another business's mobile vault, as will be shown in FIG. **4**).

FIG. **3**A depicts a subscriber-to-subscriber eMoney transfer. In a merchant and distributor scenario, either or both of the merchant and the distributor (including any delivery personnel) may be subscribers. To perform such a transfer, subscriber A (**301**) enters some type of identification information identifying subscriber B (e.g. subscriber B's phone number) and an amount of money he or she wishes to transfer. The transaction processor **216** of the monetary transaction system **210** determines if there are sufficient funds to complete the transfer. If sufficient funds are available, the monetary transaction system **210** decrements subscriber A's account and credits subscriber B's account (**302**). The system then sends some kind of notification (e.g. SMS) to subscriber B indicating that a certain amount of money was transferred to their account. Subscriber A may also receive a notification that the transfer was successful. Accordingly, eMoney may be transferred between two cloud-based platform subscribers, one or both of which may be unbanked. The cloud-based transaction system **210** processes the subscribers' requests, updates the subscribers' eMoney balances, logs the transactions, and sends transaction information to a specified bank when needed.

FIG. **3**B illustrates a subscriber-to-non-subscriber eMoney transfer. Accordingly, as mentioned above, either or both of the merchant and the distributor may be non-subscribers. In graphic **305**, subscriber A wishes to send eMoney to another individual that is not a subscriber to the cloud-based transaction platform. The transaction is initiated in the same fashion as the subscriber-to-subscriber transfer scenario. However, since non-subscriber B does not have a mobile wallet account, the cloud-based transaction system **210** cannot credit them with eMoney. Instead, the cloud-based transaction system **210** sends a notification (e.g. via SMS) to non-subscriber B with instructions for how to pick-up the transferred money, along with an authorization code (**306**). The cloud-based

transaction system **210** puts a hold on subscriber A's account for the amount transferred. Subscriber B then has a specified number of days to pick up the cash before the hold expires and the amount is credited back to subscriber A's eMoney account by the monetary transaction system **210**.

When non-subscriber B goes to pick up the money at an agent branch, the agent branch's manager or agent verifies the authorization code via an agent manager or agent mobile wallet application (that, in turn, accesses the cloud-based transaction platform). Once the transfer has been validated, the agent gives the cash to non-subscriber B. The agent branch's mFS account is credited with the transfer amount (**307**) and the user leaves with the cash in hand (**308**). The cloud-based transaction platform processes the transfer request, updates subscriber A's eMoney balance, logs the transaction, and sends transaction details to a platform-specified bank.

FIG. **4** illustrates a mobile wallet subscriber making a retail purchase. Mobile wallet subscribers can make retail purchases at agent branches directly from their mobile device. Agent branches, as explained above, are retail stores or other entities that have registered with the cloud-based transaction platform and are able to accept native and third party mobile wallet payments. Accordingly, a subscriber can select the items they wish to purchase, and indicate (via the mobile wallet application) to the agent branch that they wish to pay for the items. The mobile wallet application then communicates with the agent branch and the monetary transaction system to indicate the price of the transaction. The monetary transaction system **210** then debits the subscriber's eMoney account (**401**) and credits the agent branch's eMoney account (**402**). The agent branch (and/or the agent manager or agent) receives confirmation that subscriber paid for the purchase. The subscriber may also receive a summary of the retail purchase and may be asked to confirm the purchase by entering a PIN. The monetary transaction system processes the purchase request, updates the agent branch and subscriber's eMoney balances, logs the transaction, and sends transaction details to a cloud-based transaction platform-specified bank.

In one embodiment, the cloud-based transaction system **210** is implemented to make a purchase from a mobile wallet. The communications module **215** of the monetary transaction system **210** receives a communication from a subscriber over a communication channel **111**. The subscriber communication indicates that an unbanked subscriber **205** desires to purchase an item for a specified amount of funds using a specified payment method from the unbanked subscriber's native or third party mobile wallet.

The monetary transaction system **210** then returns a secure, perishable purchase code to the unbanked subscriber over at least one of the channels connected to the monetary transaction system and receives a subsequent agent branch communication over a channel indicating that the purchase code has been presented to an agent (branch). The monetary transaction system **210** validates the status of the specified payment method, determines if the specified payment method can accommodate a purchase for the specified amount, performs a limit check and/or a velocity check on the selected payment method, debits the specified payment method by the specified amount of funds, returns a notification to the agent branch authorizing the purchase and sends a receipt to the unbanked subscriber over a communication channel. The cloud-based transaction system **210** may thus be used in this manner to make a retail purchase using a native or third party mobile wallet.

FIG. **5** depicts a physical environment and corresponding computer system architecture **500** for allowing a user to participate in various services using a native or third party mobile wallet (e.g. **511**). Some of these services include allowing the user **507** to access disruptively priced or free financial services or items in exchange for participation in opt-in advertising. The environment **500**, like the scenarios described in FIGS. **3**A, **3**B and **4**, involves the use of a native or third party mobile wallet application **511**. The mobile wallet application **511** can be used to provide disruptively priced or free financial services or items in exchange for participation in opt-in advertising. The mobile wallet application may be run on any type of digital device including a mobile phone, tablet, laptop or other digital device. Embodiments include providing digital data (e.g., coupons or vouchers) for obtaining disruptively priced or free items (e.g., consumer goods or groceries) to such digital devices.

In some embodiments, a user has an account with a mobile payment system. The cloud-based transaction system (e.g. **210** of FIG. **2** or electronic payment system **521** of FIG. **5**) can provide the user **507** with a variety of functionality including purchasing items (see FIG. **4**), depositing funds, withdrawing funds, transferring funds (see FIGS. **3**A and **3**B), and others all from a third party wallet. Accordingly, the user can use a digital device to interact with the electronic payment system **521** to pay for goods and/or services.

In exchange for some type of financial benefit, the user opts in to receive advertisements. The financial benefits may include coupons, vouchers, promotions, Buy One Get One ("BOGO") offers or any other type of benefit (such as a reduced cost or free financial service or good) from the electronic payment system. The benefit may be targeted to the user based on the user's age, location or other demographic information, or based on the user's past purchases. At least in some embodiments, when the user agrees to participate in opt-in advertising, the electronic payment system **521** is permitted to store (e.g., by capturing purchase orders), track, and analyze items that the user purchases through their account with the electronic payment system. The electronic payment system stores and maintains lists of the users' purchased items in a data warehouse. The electronic payment system may also store information about the user (anonymous or otherwise) including age, income level, an indication of whether kids are in the family, or other information that may be useful in targeting ads or benefits to the user.

The electronic payment system analyzes **534** the users purchasing habits to identify advertisements and/or promotions that may be of interest to the user. The advertisements and/or promotions can be for items the user has purchased **503**. The advertisements and/or promotions can also be for items related to items the user has purchase. For example, if user has purchased a particular brand of razor, advertisements for the brand's shaving cream can be identified. Advertisements for related items can also be used for cross-promotion.

From time to time, at specified intervals, or based on location (e.g., having a coupon for a merchant this is with a specified proximity) the electronic payment system sends identified advertisements and/or promotions to the user's digital device. When specified advertising thresholds are satisfied (e.g., a specified number and/or type of advertisements and/or promotions are presented), the electronic payment system confers a financial benefit on the user's account. For example, the electronic payment system can provide the user's account with a low cost (e.g., reduced fee) or free financial service, such as, for example, one reduced cost bill pay or one free bill pay. Alternately, the electronic payment system can provide the user's account with a coupon or voucher for an item (e.g., an item a user has pre-selected or an item the user has purchased in the past).

In some embodiments, a client application for the electronic payment system runs on the user's digital device (e.g. mobile wallet application **511**). The user interacts with the electronic payment system through the client application. From a screen of the client application, the user can agree to accept opt in advertising. Accordingly, embodiments of the invention essentially permit a user to self-monetize themselves through their digital device.

As further depicted in FIG. **5**, computer architecture **500** includes digital device **508**, retail location **502**, and electronic payment system **521**. Digital device **508** further includes mobile wallet application **511**. Retail location **502** further includes its own mobile wallet application **512**. Electronic payment system **521** includes marketing module **533**, data warehouse **532**, advertisements **538**, payment processor **522**, user mobile wallet **524** (user **507**'s mobile wallet), and merchant mobile wallet **526** (retail location **502**'s mobile wallet).

Generally, each company in packaged goods companies **571** (or retailers that sell the packaged goods or other goods or services) can send advertisement data to electronic payment system **521**. Advertisements **538** represent the collection of advertisement data sent from packaged goods companies **571**. Each company in packaged goods companies **571** can also submit benefit rules to electronic payment system **521**. Benefit rules **578** represent the collection of benefit rules sent from packaged goods companies **571**. Benefit rules **578** define when a benefit, such as, for example, a free financial service, a coupon, a promotion, etc, is to be granted to a user of electronic payment system **521**. For example, in response to completing a questionnaire linked to a product advertisement, a user can be given a coupon for the product or for a related product.

In general, user **507** can use native or third party mobile wallet application **511** to pay for goods purchased at retail location **502** (as shown in FIG. **4**). For example, user **507** can use mobile wallet application **511** to purchase goods **503**. To pay for goods **503**, mobile wallet application **511** can send payment instruction **543** in amount **563** to electronic payment system **521**. Payment processor **522** can receive payment instruction **543**. In response, payment processor **522** can debit **541** user mobile wallet **524** by amount **563**. Payment processor **522** can also credit **542** merchant mobile wallet **526** by amount **563**.

User **507** can use mobile wallet application **511** to participate in opt-in advertising. For example, user **507** can use mobile wallet application **511** to send opt-in **544** to electronic payment system **521**. Advertising module **536** can receive opt-in **544** and record that mobile wallet application **511** has opted in for advertising. As such, when user **507** makes a purchase using mobile wallet application **511**, a list of purchased items is sent to electronic payment system **521**. For example, upon purchasing goods **503**, item list **531** is sent to electronic payment system **521** and stored in data warehouse **532**.

Propensity analysis module **534** can analyze user **507**'s purchases, including item list **531**. From the analysis, propensity analysis module **534** can identify items or categories of items user **507** may be interested in. The items can be items user **507** has purchased in the past (e.g., an item in goods **503**) or items related to items user **507** has purchases in the past. Propensity analysis module **534** can indicate identified items or categories of items to advertisement identification module **536**. These identified items or categories are items that the user is likely interested in and, as such, may have a propensity toward buying these items. The propensity analysis module may use past purchases, personal preferences, lifestyle or demographic information or other data in the propensity analysis.

Advertisement identification module **536** can then select advertisements from advertisements **538** that correspond to the identified items or categories of items. For example, advertisement identification module **536** can select advertisement **546** for presentation at mobile wallet application **511**. Advertisement **546** can be an advertisement for a product made by a company in packaged goods companies **571**. Additionally or alternatively, the advertisement **546** may be created by the merchant and may advertise products or services sold by that merchant.

Advertising module **533** can send selected advertisements to mobile wallet application **511**. For example, advertising module **533** can send advertisement **546** (e.g., related to an item in goods **503**) to mobile wallet application **511**. In general, advertisements can include interactive content. For example, advertisement **546** includes content **573**. Content **573** can be a video, a link to a company website (e.g., for a company in packaged goods companies **571**), a call to action (such as a questionnaire), or some other content user **507** can interact with through digital device **508**. User **507** can interact with content **573**, for example, responding to questions in content **573**. Advertisement response **574** can indicate how user **507** has interacted with content **573**. In one embodiment, a call to action may be to post an update on Facebook® or some other website such as a retail establishment ranking website. If the user makes such a post or performs some other call to action, the user may be rewarded with a benefit. That benefit may be related to the product about which the user posted on the various websites.

Based on advertisement response **574**, benefit determination module **576** can determine if a benefit is to be conferred upon user **507**. Benefit determination module **576** can refer to benefit rules **578** when making a determination whether or not to confer a benefit. Thus, when user **507** interacts with advertisement **546** in a specified way (e.g., completes a survey, watches a video, etc.), benefit rules **578** can indicate that a company benefit (e.g., benefit **577**) is to be conferred upon user **507**. For example, benefit determination module **576** can confer benefit **577** on user **507**. When user **507** receives an advertisement for a razor, for instance, and answers a questionnaire on how often they shave, a razor manufacture can give user **507** a coupon for reduced cost or free razor blades.

When a benefit is to be conferred on a user, the benefit can be stored in the user's brand locker. For example, benefit determination module **576** can store benefit **577** in brand locker **572** (part of user mobile wallet **524**). Benefit **577** can be a coupon, a reduced cost or free financial service, a voucher, a promotion, a free bill pay, etc.

Benefit determination module **576** can also track aggregate statistics, such as, for example, specified number and/or type of advertisements received, for advertisements presented at native or third party mobile wallet application **511**. Benefits can also be conferred upon users based on the aggregate statistics. For example, benefit determination module **576** can confer a benefit upon user **507** in response to twenty advertisements being presented at mobile wallet application **511**. Thus, conferred benefits can be company-specified benefits or can be electronic payment system-specified benefits. Electronic payment system **521** can notify a user when a benefit is conferred. For example, electronic payment system **521** can send benefit notification **547** to mobile wallet application **511** to indicate benefit **577** being stored in brand locker **572**.

When user **507** makes subsequent purchases through user mobile wallet **524**, electronic payment system **521** can auto-

matically check brand locker **572** for benefits related to any purchases items. If benefits for an item are identified, user **507** can be notified through mobile wallet application **511**. In some cases, if benefits are identified, those benefits can be applied automatically when the user purchases that item or service. Thus, if the benefit is a coupon or a buy one get one free offer, that benefit may be applied automatically when the user uses his or her mobile wallet application **511** to purchase that item. Accordingly, embodiments of the invention permit user **507** to self monetize digital device **508** through agreeing to participate in opt-in advertising.

Although not depicted, various other modules from the architecture of FIG. **1** or **2** can also be included electronic payment system **521**. The modules expressly depicted in FIG. **5** can interoperate with these other modules as appropriate to facilitate desired functionality.

FIGS. **7-9** will now be described in conjunction with the computer architecture **600** illustrated in FIG. **6**. FIG. **6** depicts a mobile wallet platform **601** that may have an architecture as shown in FIG. **1**. As further depicted in FIG. **6**, mobile wallet platform **601** communicates with an agent terminal **602** or a customer **607** to process transactions using a native or third party mobile wallet **605**. Mobile wallet platform **601** may also communicate with a third party processor **604** to process transactions using a mobile wallet or third party mobile wallet. Mobile wallet platform **601** may also communicate with a third party mobile wallet platform **603** to process transactions using a mobile wallet owned or managed by a third party mobile wallet provider.

Mobile wallet platform **601** may also process the mobile wallet transaction or third party mobile wallet transaction internally, without the use of third party processors or third party mobile wallet platforms. In particular, mobile wallet platform **601** may process transactions using third party mobile wallets in the same or similar manner that transactions are processed as shown in FIGS. **2-5**. Accordingly, the physical environment and corresponding computer system architecture **600** shown in FIG. **6** allows a cloud-based transaction platform **601** to support multiple third party mobile wallet providers.

Mobile wallet platform **601** communicates with agent terminal **602**, third party mobile wallet platform **603**, third party processor **604**, and customer's mobile phone **619** through a variety of communication channels. For example, the communication between mobile wallet platform **601** and any one of these entities may be through communication channels **111**, notification channels **112**, or third party systems **113**, as shown in FIG. **1**. Communication between mobile wallet platform **601** and any one of these entities may also be through processor **121** shown in FIG. **1**.

With respect to the entire description of FIG. **6**, and as explained above, the term "mobile wallet" encompasses not only mobile wallets owned or managed by the mobile wallet platform, but also third party mobile wallets owned by third party mobile wallet providers or managed by third party mobile wallet platforms. In contrast, the term "third party mobile wallet" refers only to third party mobile wallets owned by third party mobile wallet providers or managed by third party mobile wallet platforms. Accordingly, cloud-based transaction platform **601** may manage and process transactions using mobile wallets **605**, which may be mobile wallets owned by cloud-based transaction platform **601** or mobile wallets owned by a third party mobile wallet provider.

As shown in FIG. **6**, customer **607** initiates a mobile wallet transaction **608** at agent terminal **602**. Agent terminal **602** may be part of an agent network consisting of one or more agent terminals that communicate with cloud-based transaction platform **601**. Examples of agent terminals are stores and other commercial establishments. Alternatively, customer **607** may initiate a mobile wallet transaction **609** by communicating with cloud-based transaction platform **601** through a channel selected by the customer.

Mobile wallet transactions **608** and **609** may be one or more of any type of transaction that can be performed using a mobile wallet, including but not limited to, a deposit, withdrawal, transfer, purchase, bill payment, topping up of a prepaid mobile account, or any other transaction described herein. Customer **607** may initiate transactions **608** and **609** in a variety of ways. For example, customer **607** can initiate a deposit into a mobile wallet, a withdrawal from a mobile wallet, a bill payment from a mobile wallet, topping up of a prepaid mobile account using a mobile wallet, a transfer from a mobile wallet, a remittance transaction, a selection of health care provider or payment of health services, a purchase of music, movies, games or other downloadable content, or other purchases using a mobile wallet.

After customer **607** initiates transaction **609** through agent terminal **602**, agent terminal **602** then communicates with cloud-based transaction platform **601** by sending transaction data **610** to cloud-based transaction platform **601**. Once cloud-based transaction platform **601** has received the transaction either through transaction data **610** from agent terminal **602** or from transaction **609** initiated by customer **607**, cloud-based transaction platform **601** may then process the transaction in a variety of ways.

For example, cloud-based transaction platform **601** may process the transaction by communicating with third party processor **604** by sending third party transaction data **611**, which may include some or all of the information in transaction data **610**. Third party processor can then perform the requested transactional processing and respond by sending confirmation data **612** to cloud-based transaction platform **601**. Confirmation data **612** can indicate whether the requested mobile wallet transaction was processed successfully or unsuccessfully.

In another example, cloud-based transaction platform **601** may process the transaction by communicating with third party mobile wallet platform **603** by sending third party transaction data **613**, which may include some or all of the information in transaction data **610**. Third party mobile wallet platform **603** may have any architecture which is suitable for processing mobile wallet transactions. Third party mobile wallet platform **603** may have an architecture that is the same or similar to the architecture shown in FIG. **1**.

Alternatively, third party mobile wallet platform **603** may have a different architecture. In addition, any aspects of cloud-based transaction platform **601** or functionality provided by that platform may also be present in third party mobile wallet platform **603**. After receiving third party transaction data **613**, third party mobile wallet platform **603** may process the transaction itself or forward the transaction to third party processor **604** by sending third party transaction data **614**.

Once processing of the transaction is complete, third party mobile wallet platform **603** may respond to cloud-based transaction platform **601** by sending confirmation data **615**. Confirmation data **615** can indicate whether the requested mobile wallet transaction was processed successfully or unsuccessfully. In addition, following the processing performed by third party mobile wallet platform **603** after receiving third party transaction data **613**, the third party mobile wallet platform **603** may provide a commission or transaction fee **616** to cloud-based transaction platform **601**.

In a further example, mobile wallet platform **601** may process the transaction internally within cloud-based transaction platform **601**. Specifically, cloud-based transaction platform **601** may process a transaction using a third party mobile wallet entirely within cloud-based transaction platform **601**.

Once processing of the transaction is complete, cloud-based transaction platform **601** may communicate with agent terminal **602** by sending confirmation data **617** indicating information such as whether the transaction was successful or not. Also following processing of the transaction, mobile wallet platform may send customer notification **618** through an appropriate channel such as to the customer's mobile phone **619**. For example, customer notification **618** may be sent using the notification services **102** and notification channels **112** (e.g. SMPP, SMTP, voice) of FIG. **1**.

With reference now to FIGS. **2**, **6** and **7**, the cloud-based transaction system **210** receives communication **226** from an agent terminal **223** over a communication channel connected to the cloud-based transaction platform **210**/**601** (act **710**). The agent communication indicates that a customer **222**/**205** desires to perform a mobile wallet transaction using their third party mobile wallet **207**. The cloud-based transaction system **210** sends the agent communication to a third party mobile wallet platform **603** (act **720**). The cloud-based transaction system **210** then receives communication **611** from the third party mobile wallet platform confirming processing of the transaction **612** (act **730**) and sends communication **617** to the agent terminal **602** over communication channels **111** connected to the cloud-based transaction platform indicating confirmation of the processing of the transaction (act **740**).

As mentioned above, multiple different types of transactions may be performed using the infrastructure provided by the cloud-based transaction system. The transactions may be a performed not only by a first customer that uses a first mobile wallet provider, but also by a second, different customer using a second, different third party mobile wallet provider. The third party mobile wallet platform may use a third party processor to perform (at least parts of) the transaction. The customer may be notified of confirmation of the processing of the transaction using the third party mobile wallet over various communication channels connected to the cloud-based transaction platform. In some cases, each third party mobile wallet provider has their own point of sale (POS) processing system **230**. The third party mobile wallet providers' POS processing systems may communicate with each other using the cloud-based transaction platform to process the transaction.

One of the transactions made possible by the cloud-based transaction platform **601** is depositing funds into a third party mobile wallet owned by an entity different than the customer. The cloud-based transaction system may receive a communication **226** from the agent terminal **223** over a communication channel connected to the cloud-based transaction platform. The agent communication indicates that the customer desires to deposit a specified amount of funds into their third party mobile wallet **605**. The cloud-based transaction system may then credit the third party mobile wallet with the specified amount of funds.

Another transaction provided by the cloud-based transaction platform **601** is withdrawing funds from a third party mobile wallet owned by an entity different than the customer. The cloud-based transaction platform receives communication **208** from the customer **205** indicating that the customer desires to withdraw a specified amount of funds from the third party mobile wallet. The cloud-based transaction platform **601** returns a secure, perishable withdrawal code to the customer over at least one of the communication channels connected to the cloud-based transaction platform. It also receives communication from the agent terminal **223** indicating that the withdrawal code has been presented to an agent and debits the third party mobile wallet by the specified amount of funds.

Another transaction provided by the cloud-based transaction platform **601** is transferring money from a third party mobile wallet within the cloud-based transaction platform to a recipient at a second third party mobile wallet provided by a second mobile wallet provider. In this transaction, the platform **601** receives a customer communication **208** indicating that a customer **205** desires to transfer a specified amount of funds to a specified recipient using a specified payment method from the third party mobile wallet **606**. The cloud-based transaction platform debits the third party mobile wallet by the specified amount of funds and transfers the specified amount of funds from the cloud-based transaction platform to the second different third party mobile wallet platform for delivery to the specified recipient. The specified amount of funds is then transferred to the second third party mobile wallet platform.

Yet another transaction provided by the cloud-based transaction platform **601** is making a purchase from a third party mobile wallet managed by a third party mobile wallet platform. In this transaction, the cloud-based transaction platform receives communication **208** from the customer **205** indicating that the customer desires to purchase an item for a specified amount of funds using a specified payment method from the customer's third party mobile wallet **606**. The cloud-based transaction platform returns a secure, perishable purchase code to the customer, receives communication **226** from the agent terminal **223** indicating that the purchase code has been presented to an agent, and debits the customer's third party mobile wallet by the specified amount of funds.

In another embodiment, as shown in FIG. **8**, a cloud-based transaction system performs or facilitates a transaction using a third party point of sale (POS) system. The cloud-based transaction system receives communication **226** from a specified POS system **224** implemented at an agent terminal **223** over a communication channels **111** connected to the cloud-based transaction platform **210** (act **810**). The POS communication indicates that a customer **205** has initiated a mobile wallet transaction using their third party mobile wallet **207**. The cloud-based transaction system sends the POS communication to a corresponding third party POS transaction processing system **230** that has been established to process POS transactions from the specified POS system (act **820**). The cloud-based transaction system then receives communication from the third party POS transaction processing system **230** confirming processing of the transaction (act **830**) and sends communication to the specified POS system **224** implemented at the agent terminal **223** indicating confirmation of the processing of the transaction (act **840**).

In some cases, transaction fees or commissions **616** may be paid by the third party mobile wallet platform to the cloud-based transaction platform for facilitating the transaction. One of the transactions allowed by the cloud-based transaction system is depositing funds into a third party mobile wallet provided by a third party mobile wallet provider. In this transaction, the cloud-based transaction platform **210** receives communication **226** from a specified POS system **224** implemented at the agent terminal **223** over a communication channels **111** connected to the cloud-based transaction platform. The POS communication indicates that the customer **205**/**222** desires to deposit a specified amount of funds into the third party mobile wallet **606** provided by the third

party mobile wallet provider. The cloud-based transaction system validates the status of the third party mobile wallet provided by the third party mobile wallet provider, determines if the specified POS system implemented at the agent terminal is authorized to deposit money, performs a limit check or a velocity check on the third party mobile wallet provided by the third party mobile wallet provider, credits the third party mobile wallet provided by the third party mobile wallet provider with the specified amount of funds, returns a notification to the specified POS system implemented at the agent terminal confirming the deposit and notifies the customer that the specified amount of funds were deposited in the third party mobile wallet provided by the third party mobile wallet provider over a communication channel connected to the cloud-based transaction platform **210**.

Another transaction provided by the cloud-based transaction platform **210** is withdrawing funds from a third party mobile wallet provided by a third party mobile wallet provider. The cloud-based transaction platform **210** receives communication **208** from a customer **205** indicating that the customer desires to withdraw a specified amount of funds from the third party mobile wallet **606** provided by the third party mobile wallet provider. The cloud-based transaction platform **210** validates the status of the third party mobile wallet provided by the third party mobile wallet provider, determines if the balance of the third party mobile wallet provided by the third party mobile wallet provider is sufficient to accommodate the requested withdrawal for the specified amount of funds, performs a limit check and/or a velocity check on the third party mobile wallet, returns a secure, perishable withdrawal code to the customer over a communication channel **111** connected to the cloud-based transaction platform, receives subsequent POS communication **226** indicating that the withdrawal code has been presented to an agent (e.g. at agent terminal **223**), debits the third party mobile wallet provided by the third party mobile wallet provider by the specified amount of funds, returns a notification to the POS system at the agent terminal confirming the withdrawal and notifies the customer **205** (e.g. in confirmation **617**) that the specified amount of funds were withdrawn from the third party mobile wallet.

In yet another transaction provided by the cloud-based transaction platform, money is transferred using a third party mobile wallet provided by a third party mobile wallet provider. The cloud-based transaction platform **210** receives customer communication **208** indicating that the customer **205** desires to transfer a specified amount of funds to a specified recipient having a third party mobile wallet **606**, where the transfer uses a specified payment method from the customer's third party mobile wallet at the cloud-based transaction platform **210**. The cloud-based transaction platform validates the status of the specified payment method, performs a limit check and/or a velocity check on the specified payment method, performs a check on the specified recipient having a third party mobile wallet to comply with the office of foreign assets control, debits the customer's mobile wallet at the cloud-based transaction platform by the specified amount of funds, transfers the specified amount of funds to third party mobile wallet provider for delivery to the third party mobile wallet of the specified recipient over a communication channel connected between the cloud-based transaction platform and the third party mobile wallet provider, and notifies the customer that the specified amount of funds was transferred to the specified recipient.

In another transaction provided by the cloud-based transaction platform **210**, a purchase is made from a third party mobile wallet provided by a third party mobile wallet provider. In this transaction, the cloud-based transaction system receives communication **208** from the customer **205** indicating that the customer desires to purchase an item for a specified amount of funds using a specified payment method from the customer's third party mobile wallet **606**. The cloud-based transaction system returns a secure, perishable purchase code to the customer, receives subsequent agent terminal communication indicating that the purchase code has been presented to an agent, validates the status of the specified payment method, determines if the specified payment method can accommodate a purchase for the specified amount, performs a limit check and/or a velocity check on the specified payment method, debits the customer's third party mobile wallet by the specified amount of funds by sending communication to the third party mobile wallet provider, returns a notification to the POS system at the agent terminal authorizing the purchase and sends a receipt to the customer over at least one of the plurality of communication channels connected to the cloud-based transaction platform.

FIG. **9** describes a further embodiment in which a cloud-based transaction platform facilitates making a purchase from a third party mobile wallet provided by a third party mobile wallet provider. The cloud-based transaction system **210** receives communication **208** from a customer **205** over a communication channel connected to the cloud-based transaction platform (act **910**). The customer communication indicating that a customer desires to purchase an item for a specified amount of funds using a specified payment method indicated by the customer's third party mobile wallet **606**. The cloud-based transaction system returns a secure, perishable purchase code to the customer (act **920**) and receives communication from an agent terminal **223** over at least one of the communication channels connected to the cloud-based transaction platform indicating that the purchase code has been presented to an agent (act **930**). The cloud-based transaction system **210** then debits the customer's third party mobile wallet **606** by the specified amount of funds (act **940**).

Substantially any item may be purchased using this transaction technique including items provided directly by the cloud-based transaction system, or items provided by third party retailers through the cloud-based transaction system. These items may include health care services, physical, shippable items, music, games, movies or any other digital or downloadable content.

Embodiments of the invention can adhere to Know Your Customer (KYC) rules in the United States by performing Customer Identification Program (CIP) checks as required by the Bank Secrecy Act and U.S. PATRIOT Act. A minimum amount of information can be gathered about a customer, such as, for example, First Name, Last Name, Date of Birth, Government ID Type, Government ID Number, Address. The CIP processes are designed to validate customer identity against government blacklists and assist in the prevention of money laundering and terrorist financing. A combination of non-documentary and documentary verification can be used to ensure beyond a reasonable doubt the identity of the customer.

Non-Documentary Verification can occur through the presentment of the information that was collected from the user to an external third party, such as, for example, Lexis Nexis. Documentary Verification can occur if non-documentary verification fails, then the user is asked to present an unexpired government ID. Various differ forms of identification including Driver's license, Passport, Alien identification (e.g., green card or work visa), and Mexican Consular identification card, can be accepted.

Embodiments of the invention can perform Anti-Money Laundering (AML) and Combating the Financing of Terrorism (CFT) checks. AML and CFT checks can be performed using transaction monitoring methods to flag names and suspicious transactions for further investigation. The mobile wallet platform can perform AML and CFT checks on all electronic financial transactions to ensure that electronic funds are not being used for money laundering or terrorism. Transaction limits can be placed on user accounts. The transaction limits are fully configurable for each particular use case, channel and payment method that allows maximum flexibility to restrict higher risk use cases. Velocity checks can also be performed. Velocity Checks ensure that subscribers are not abusing the mobile wallet platform within the allowable limits.

The present invention may be embodied in other specific forms without departing from its spirit or essential characteristics. The described embodiments are to be considered in all respects only as illustrative and not restrictive. The scope of the invention is, therefore, indicated by the appended claims rather than by the foregoing description. All changes which come within the meaning and range of equivalency of the claims are to be embraced within their scope.

What is claimed:

**1**. A computing system for facilitating management of a mobile wallet, including:

one or more processors;

system memory;

an integration tier configured to manage mobile wallet sessions with a mobile device and including web services communication mechanisms for interfacing with a mobile wallet application installed on a hardware SIM card as well as with a plurality of different device types over a plurality of different communication channels, the integration tier being configured to receive binary and text messages from the mobile device;

a notification services engine configured to interface with the integration tier and to send Short Message Peer-to-Peer (SSMP) messages, Short Messaging Service (SMS) messages and Simple Mail Transfer Protocol (SMTP) messages over the different communication channels to different devices, including the mobile device, to interface with the mobile wallet application installed on the hardware SIM card;

service connectors that are each configured to connect the computing system to a different third party system, each of the service connectors being configured as a separate module for integrating a corresponding external service to the computing system;

a payment handler that exposes a common API for interacting with different payment processors;

a security services engine that performs subscriber authentication utilizing a database-based Access Control List (ACL);

a rules engine configured to enforce constraints on financial transactions performed with the mobile wallet application, the mobile wallet application being associated with a mobile wallet account; and

one or more computer-readable storage media having stored thereon computer-executable instructions that are executable by the one or more processors to cause the computing system to perform a transaction for a customer using the mobile wallet which is owned by another entity than the customer, comprising the following:

the computing system receiving communication from an agent terminal over one of a plurality of communication channels connected to the cloud-based transaction platform, the agent communication indicating that a customer desires to perform a transaction comprising a mobile wallet transaction using a third party mobile wallet, the mobile wallet transaction comprising at least one of a mobile wallet transfer in which funds are transferred from the mobile wallet of the customer to a third party mobile wallet, a mobile wallet withdrawal in which funds are withdrawn from the third party mobile wallet and provided to the customer, or a mobile wallet deposit in which funds are deposited into the third party mobile wallet;

the computing system sending the agent communication to the third party mobile wallet platform;

the computing system determining whether the mobile wallet transaction comprises the mobile wallet withdrawal and when the mobile wallet transaction is determined to comprise the mobile wallet withdrawal, generating and providing a perishable withdrawal code to the consumer, which is presented to the agent terminal to facilitate processing of the mobile wallet withdrawal;

the computing system receiving communication from the third party mobile wallet platform confirming processing of the transaction, the transaction comprising at least one of the mobile wallet transfer, the mobile wallet withdrawal or the mobile wallet deposit; and

the computing system sending communication to the agent terminal over one of a plurality of communication channels connected to the cloud-based transaction platform, the communication indicating confirmation of the processing of the transaction.

**2**. The computing system of claim **1**, wherein a new transaction is performed by the computing system for a second, different customer using a second, different third party mobile wallet.

**3**. The computing system of claim **1**, wherein the transaction further comprises the customer of confirmation of the processing of the transaction using the third party mobile wallet over at least one of the plurality of communication channels connected to the cloud-based transaction platform.

**4**. The computing system of claim **1**, wherein the third party mobile wallet is provided by a third party mobile wallet provider.

**5**. The computing system of claim **4**, wherein each third party mobile wallet provider has their own point of sale (POS) processing system.

**6**. The computing system of claim **5**, wherein the third party mobile wallet providers' POS processing systems communicate with each other using the cloud-based transaction platform to process the transaction.

**7**. computing system of claim **1**, wherein the transaction comprises the mobile wallet deposit for depositing funds into the third party mobile wallet which is owned by the entity different than the customer, including:

receiving communication from the agent terminal over one of the plurality of communication channels connected to the cloud-based transaction platform, the agent communication indicating that the customer desires to deposit a specified amount of funds into the third party mobile wallet; and

crediting the third party mobile wallet with the specified amount of funds.

**8**. The computing system of claim **1**, wherein the transaction comprises the mobile wallet withdrawal for withdrawing funds from the third party mobile wallet owned which is owned by the entity different than the customer, including:

receiving communication from the customer over one of the plurality of communication channels connected to the cloud-based transaction platform, the customer communication indicating that the customer desires to withdraw a specified amount of funds from the third party mobile wallet;

providing the perishable withdrawal code to the customer over at least one of the plurality of communication channels connected to the cloud-based transaction platform;

receiving communication from the agent terminal over at least one of the plurality of communication channels connected to the cloud-based transaction platform, the agent terminal communication indicating that the perishable withdrawal code has been presented to an agent; and

debiting the third party mobile wallet by the specified amount of funds.

**9**. The computing system of claim **1**, wherein the transaction comprises the mobile wallet transfer for transferring money from a mobile wallet account of the customer provided by a first mobile wallet provider to a third party mobile wallet of a recipient provided by a second mobile wallet provider, the method comprising:

receiving customer communication over one of the plurality of communication channels connected to the cloud-based transaction platform, the customer communication indicating that the customer desires to transfer a specified amount of funds to the recipient using a specified payment method from the mobile wallet account of the customer;

debiting the mobile wallet account by the specified amount of funds; and

transferring the specified amount of funds from the cloud-based transaction platform to the second third party mobile wallet platform for delivery to the specified recipient, the specified amount of funds being transferred over at least one of the plurality of channels connected to the third party mobile wallet platform.

**10**. The computing system of claim **1**, wherein the claimed method also includes performing a new transaction comprising a mobile wallet purchase at an agent terminal using a third party mobile wallet managed by a third party mobile wallet platform, including:

receiving communication from the customer over one of the plurality of channels connected to the cloud-based transaction platform, the customer communication indicating that the customer desires to purchase an item for a specified amount of funds using a specified payment method from a third party mobile wallet;

returning a secure, perishable purchase code to the customer over at least one of the plurality of channels connected to the cloud-based transaction platform;

receiving communication from the agent terminal over at least one of the plurality of channels connected to the cloud-based transaction platform, the agent terminal communication indicating that the purchase code has been presented to an agent;

debiting the third party mobile wallet by the specified amount of funds; and

crediting an agent account by the specified amount of funds.

**11**. At a computer system including at least one processor and a memory, a computer-implemented a method for performing a transaction for a customer using a third party mobile wallet owned by another entity than the customer, the method comprising the following:

the computing system receiving communication from an agent terminal over one of a plurality of communication channels connected to the cloud-based transaction platform, the agent communication indicating that a customer desires to perform a transaction comprising a mobile wallet transaction using a third party mobile wallet, the mobile wallet transaction comprising at least one of a mobile wallet transfer in which funds are transferred from the mobile wallet of the customer to a third party mobile wallet, a mobile wallet withdrawal in which funds are withdrawn from the third party mobile wallet and provided to the customer, or a mobile wallet deposit in which funds are deposited into the third party mobile wallet;

the computing system sending the agent communication to the third party mobile wallet platform;

the computing system receiving communication from the third party mobile wallet platform confirming processing of the transaction, the transaction comprising at least one of the mobile wallet transfer, the mobile wallet withdrawal or the mobile wallet deposit;

the computing system determining whether the mobile wallet transaction comprises the mobile wallet withdrawal and when the mobile wallet transaction is determined to comprise the mobile wallet withdrawal, generating and providing a perishable withdrawal code to the consumer, which is presented to the agent terminal to facilitate processing of the mobile wallet withdrawal; and

the computing system sending communication to the agent terminal over one of a plurality of communication channels connected to the cloud-based transaction platform, the communication indicating confirmation of the processing of the transaction, wherein the computing system includes:

one or more processors;

system memory;

an integration tier configured to manage mobile wallet sessions with a mobile device on which a mobile wallet application is installed and including web services communication mechanisms for interfacing with the mobile wallet application which is installed on a hardware SIM card as well as with a plurality of different device types over a plurality of different communication channels, the integration tier being configured to receive binary and text messages from the mobile device;

a notification services engine configured to interface with the integration tier and to send Short Message Peer-to-Peer (SSMP) messages, Short Messaging Service (SMS) messages and Simple Mail Transfer Protocol (SMTP) messages over the different communication channels to different devices, including the mobile device, to interface with the mobile wallet application installed on the hardware SIM card;

service connectors that are each configured to connect the computing system to a different third party system, each of the service connectors being configured as a separate module for integrating a corresponding external service to the computing system;

a payment handler that exposes a common API for interacting with different payment processors;

a security services engine that performs subscriber authentication utilizing a database-based Access Control List (ACL); and

a rules engine configured to enforce constraints on financial transactions performed with the mobile wallet application.

12. The computer-implemented method of claim 11, wherein a new transaction is performed by the computing system for a second, different customer using a second, different third party mobile wallet.

13. The computer-implemented method of claim 11, wherein the third party mobile wallet platform comprises a third party processor.

14. The computer-implemented method of claim 11, further comprising notifying the customer of confirmation of the processing of the transaction using the third party mobile wallet over at least one of the plurality of communication channels connected to the cloud-based transaction platform.

15. The computer-implemented method of claim 11, wherein the third party mobile wallet is provided by a third party mobile wallet provider.

16. The computer-implemented method of claim 15, wherein each third party mobile wallet provider has their own point of sale (POS) processing system.

17. The computer-implemented method of claim 16, wherein the third party mobile wallet providers' POS processing systems communicate with each other using the cloud-based transaction platform to process the transaction.

18. The computer-implemented method of claim 11, wherein the transaction comprises the mobile wallet deposit for depositing funds into the third party mobile wallet which is owned by the entity different than the customer, including:

receiving communication from the agent terminal over one of the plurality of communication channels connected to the cloud-based transaction platform, the agent communication indicating that the customer desires to deposit a specified amount of funds into the third party mobile wallet; and

crediting the third party mobile wallet with the specified amount of funds.

19. The computer-implemented method of claim 11, wherein the transaction comprises the mobile wallet withdrawal for withdrawing funds from the third party mobile wallet owned which is owned by the entity different than the customer, including:

receiving communication from the customer over one of the plurality of communication channels connected to the cloud-based transaction platform, the customer communication indicating that the customer desires to withdraw a specified amount of funds from the third party mobile wallet;

returning providing the perishable withdrawal code to the customer over at least one of the plurality of communication channels connected to the cloud-based transaction platform;

receiving communication from the agent terminal over at least one of the plurality of communication channels connected to the cloud-based transaction platform, the agent terminal communication indicating that the perishable withdrawal code has been presented to an agent;

debiting the third party mobile wallet by the specified amount of funds; and

crediting the agents account by the specified amount of funds.

20. The computer-implemented method of claim 11, wherein the transaction comprises the mobile wallet transfer for transferring money from a mobile wallet account of the customer provided by a first mobile wallet provider to a third party mobile wallet of a recipient provided by a second mobile wallet provider, the method comprising:

receiving customer communication over one of the plurality of communication channels connected to the cloud-based transaction platform, the customer communication indicating that the customer desires to transfer a specified amount of funds to the recipient using a specified payment method from the mobile wallet account of the customer;

debiting the mobile wallet account by the specified amount of funds; and

transferring the specified amount of funds from the cloud-based transaction platform to the second third party mobile wallet platform for delivery to the specified recipient, the specified amount of funds being transferred over at least one of the plurality of channels connected to the third party mobile wallet platform.

21. The computer-implemented method of claim 11, wherein the claimed method also includes performing a new transaction comprising a mobile wallet purchase at an agent terminal using a third party mobile wallet managed by a third party mobile wallet platform, including:

receiving communication from the customer over one of the plurality of channels connected to the cloud-based transaction platform, the customer communication indicating that the customer desires to purchase an item for a specified amount of funds using a specified payment method from a third party mobile wallet;

returning a secure, perishable purchase code to the customer over at least one of the plurality of channels connected to the cloud-based transaction platform;

receiving communication from the agent terminal over at least one of the plurality of channels connected to the cloud-based transaction platform, the agent terminal communication indicating that the purchase code has been presented to an agent;

debiting the third party mobile wallet by the specified amount of funds; and

crediting an agent account by the specified amount of funds.

22. One or more computer-readable hardware storage devices having stored thereon computer-executable instructions that are executable by the one or more processors of a computing system to cause the computing system to perform a transaction for a customer using a third party mobile wallet owned by another entity than the customer, comprising the following:

the computing system receiving communication from an agent terminal over one of a plurality of communication channels connected to the cloud-based transaction platform, the agent communication indicating that a customer desires to perform a transaction comprising a mobile wallet transaction using a third party mobile wallet, the mobile wallet transaction comprising at least one of a mobile wallet transfer in which funds are transferred from the mobile wallet of the customer to a third party mobile wallet, a mobile wallet withdrawal in which funds are withdrawn from the third party mobile wallet and provided to the customer, or a mobile wallet deposit in which funds are deposited into the third party mobile wallet;

the computing system sending the agent communication to the third party mobile wallet platform;

the computing system receiving communication from the third party mobile wallet platform confirming processing of the transaction, the transaction comprising at least one of the mobile wallet transfer, the mobile wallet withdrawal or the mobile wallet deposit;

the computing system determining whether the mobile wallet transaction comprises the mobile wallet withdrawal and when the mobile wallet transaction is determined to comprise the mobile wallet withdrawal, gen-

erating and providing a perishable withdrawal code to the consumer, which is presented to the agent terminal to facilitate processing of the mobile wallet withdrawal; and

the computing system sending communication to the agent terminal over one of a plurality of communication channels connected to the cloud-based transaction platform, the communication indicating confirmation of the processing of the transaction, wherein the computing system includes:

one or more processors;

system memory;

an integration tier configured to manage mobile wallet sessions with a mobile device on which a mobile wallet application is installed and including web services communication mechanisms for interfacing with the mobile wallet application which is installed on a hardware SIM card as well as with a plurality of different device types over a plurality of different communication channels, the integration tier being configured to receive binary and text messages from the mobile device;

a notification services engine configured to interface with the integration tier and to send Short Message Peer-to-Peer (SSMP) messages, Short Messaging Service (SMS) messages and Simple Mail Transfer Protocol (SMTP) messages over the different communication channels to different devices, including the mobile device, to interface with the mobile wallet application installed on the hardware SIM card;

service connectors that are each configured to connect the computing system to a different third party system, each of the service connectors being configured as a separate module for integrating a corresponding external service to the computing system;

a payment handler that exposes a common API for interacting with different payment processors;

a security services engine that performs subscriber authentication utilizing a database-based Access Control List (ACL); and

a rules engine configured to enforce constraints on financial transactions performed with the mobile wallet application.

* * * * *