Patent
Attorney Docket No. 0079124-000162

IN THE UNITED STATES PATENT AND TRADEMARK OFFICE

REQUEST FOR FILING CONTINUATION / DIVISIONAL APPLICATION UNDER 37 C.F.R. § 1.53(b)

Commissioner for Patents
P.O. Box 1450
Alexandria, VA 22313-1450

Customer Number **21839**

Commissioner:

This is a request for filing a ☒ continuation ☐ divisional application under 37 C.F.R. § 1.53(b) of the following pending application, Application No. 15/117,078, filed August 5, 2016, entitled DETECTING TOOTH SHADE

by the following named inventor(s):

Bo ESBECH; Rune FISKER; Lars HENRIKSEN; and Tais CLAUSEN

☒ Applicant(s) requests that the published application include the following assignment information: 3SHAPE A/S, Copenhagen K, DENMARK.

1. ☐ Enclosed is a revised prior application. No new matter has been added to the revised application.

2. ☒ The filing fee has been calculated as follows ☐ and in accordance with the enclosed Preliminary Amendment:

					FEES
Basic Patent Application Filing Fee (1011)					**$300.00**
Search Fee (1111)					**$660.00**
Examination Fee (1311)					**$760.00**
	No. of Claims		**Extra Claims**	**Rate**	
Total Claims	18	Minus 20=	0	x $ 100.00 (1202)	
Independent Claims	1	Minus 3=	0	x $ 460.00 (1201)	
If multiple dependent claims are presented, add $820.00 (1203)					
App. Size Fee (app + dwgs. exceeding 100 sheets) - $400.00 / each add'l. 50 sheets (1081)					
Late Declaration Fee $160.00 (1051)					
TOTAL APPLICATION FEE DUE					**$1,720.00**

3. ☒ Charge $1,720.00 to credit card. Filing fee being paid concurrent with electronic filing of application.

4. ☒ The Director is hereby authorized to charge any appropriate fees under 37 C.F.R. §§ 1.16, 1.17 and 1.21 that may be required by this paper, and to credit any overpayment, to Deposit Account No. 02-4800.

Buchanan Ingersoll & Rooney PC
Attorneys & Government Relations Professionals

(05/14)

5. Applicant(s) claims priority under 35 U.S.C. §§ 119 and/or 120 of the following application(s):

Country	Appl. No.	Filing Date MM-DD-YYYY
DK	PA 2014 70066	02-07-2014

☒ The certified copy / DAS Code of the priority application:

☒ was filed in prior Application No. 15/117,078, filed on August 5, 2016, and acknowledged by the Examiner on August 11, 2017, in Paper No. 20170805.

6. ☒ New drawings are enclosed.

7. ☒ An Information Disclosure Statement is enclosed.

8. ☒ A General Authorization of Payment of Fees and Petitions for Extensions of Time is enclosed.

9. ☒ An Application Data Sheet is enclosed.

10. ☒ Power of Attorney by Applicant.

11. ☒ Statement Under 37 CFR 3.73(c).

Please address all correspondence concerning this application to:

Buchanan Ingersoll & Rooney PC
Customer Number **2 1 8 3 9**

Respectfully submitted,

BUCHANAN INGERSOLL & ROONEY PC

Date: **5 February 2018**

By /Travis D. Boone/
Travis D. Boone
Registration No. 52635

Address of signator:

Buchanan Ingersoll & Rooney PC
P.O. Box 1404
Alexandria, VA 22313-1404
703 836 6620

☐ inventor(s)
☐ assignee of complete interest
☒ attorney or agent of record
☐ filed under 37 C.F.R.§ 1.34(a)

IN THE UNITED STATES PATENT AND TRADEMARK OFFICE

In re Patent Application of	)	
	)	
Bo ESBECH	)	Group Art Unit: Unassigned
	)	
Application No.: Unassigned	)	Confirmation No.:
	)	
Filed: On Even Date Herewith	)	
	)	
For: DETECTING TOOTH SHADE	)	
	)	
	)	
	)	

GENERAL AUTHORIZATION FOR PETITIONS FOR EXTENSIONS OF TIME AND PAYMENT OF FEES

Commissioner for Patents
P.O. Box 1450
Alexandria, VA 22313-1450

Commissioner:

In accordance with 37 C.F.R. § 1.136(a)(3), the U.S. Patent and Trademark Office is hereby provided with a general authorization to treat any concurrent or future reply requiring a petition for an extension of time for its timely submission as containing a request therefor for the appropriate length of time.

The Commissioner is hereby authorized to charge any appropriate fees that may be required by this paper, or any other submissions in this application, and to credit any overpayment, to Deposit Account No. 02-4800.

Respectfully submitted,

BUCHANAN INGERSOLL & ROONEY PC

Date: 5 February 2018

By: /Travis D. Boone/
Travis D. Boone
Registration No. 52635

Customer Number 21839
703.836.6620

Doc Code: PA..
Document Description: Power of Attorney

PTO/AIA/82B (07-13)
Approved for use through 11/30/2014. OMB 0651-0031
U.S. Patent and Trademark Office; U.S. DEPARTMENT OF COMMERCE
Under the Paperwork Reduction Act of 1995, no persons are required to respond to a collection of information unless it displays a valid OMB control number

POWER OF ATTORNEY BY APPLICANT

I hereby revoke all previous powers of attorney given in the application identified in either the attached transmittal letter or the boxes below.

Application Number	Filing Date

(Note: The boxes above may be left blank if information is provided on form PTO/AIA/82A.)

☑ I hereby appoint the Patent Practitioner(s) associated with the following Customer Number as my/our attorney(s) or agent(s), and to transact all business in the United States Patent and Trademark Office connected therewith for the application referenced in the attached transmittal letter (form PTO/AIA/82A) or identified above: 21839

OR

☐ I hereby appoint Practitioner(s) named in the attached list (form PTO/AIA/82C) as my/our attorney(s) or agent(s), and to transact all business in the United States Patent and Trademark Office connected therewith for the patent application referenced in the attached transmittal letter (form PTO/AIA/82A) or identified above. (Note: Complete form PTO/AIA/82C.)

Please recognize or change the correspondence address for the application identified in the attached transmittal letter or the boxes above to:

☐ The address associated with the above-mentioned Customer Number

OR

☑ The address associated with Customer Number: 21839

OR

Firm or Individual Name					
Address					
City		State		Zip	
Country					
Telephone		Email			

I am the Applicant (if the Applicant is a juristic entity, list the Applicant name in the box):

3Shape A/S

☐ Inventor or Joint Inventor (title not required below)

☐ Legal Representative of a Deceased or Legally Incapacitated Inventor (title not required below)

☑ Assignee or Person to Whom the Inventor is Under an Obligation to Assign (provide signer's title if applicant is a juristic entity)

☐ Person Who Otherwise Shows Sufficient Proprietary Interest (e.g., a petition under 37 CFR 1.46(b)(2) was granted in the application or is concurrently being filed with this document) (provide signer's title if applicant is a juristic entity)

SIGNATURE of Applicant for Patent

The undersigned (whose title is supplied below) is authorized to act on behalf of the applicant (e.g., where the applicant is a juristic entity).

Signature		Date (Optional)	11 MAY 2012
Name	HETTE CARLSTEDT		
Title	GENERAL COUNSEL		

NOTE: Signature - This form must be signed by the applicant in accordance with 37 CFR 1.33. See 37 CFR 1.4 for signature requirements and certifications. If more than one applicant, use multiple forms.

☐ Total of forms are submitted.

This collection of information is required by 37 CFR 1.131, 1.32, and 1.33. The information is required to obtain or retain a benefit by the public which is to file (and by the USPTO to process) an application. Confidentiality is governed by 35 U.S.C. 122 and 37 CFR 1.11 and 1.14. This collection is estimated to take 3 minutes to complete, including gathering, preparing, and submitting the completed application form to the USPTO. Time will vary depending upon the individual case. Any comments on the amount of time you require to complete this form and/or suggestions for reducing this burden, should be sent to the Chief Information Officer, U.S. Patent and Trademark Office, U.S. Department of Commerce, P.O. Box 1450, Alexandria, VA 22313-1450. DO NOT SEND FEES OR COMPLETED FORMS TO THIS ADDRESS. **SEND TO: Commissioner for Patents, P.O. Box 1450, Alexandria, VA 22313-1450.**

If you need assistance in completing the form, call 1-800-PTO-9199 and select option 2.

Attorney Docket No. 0079124-000162

STATEMENT UNDER 37 C.F.R. 3.73(c)

Applicant/Patent Owner: 3SHAPE A/S

Application No./Patent No.: Unassigned Filed/Issue Date: On Even Date Herewith

Titled: DETECTING TOOTH SHADE

3SHAPE A/S (Name of Assignee), a corporation (Type of Assignee, e.g., corporation, partnership, university, government agency, etc.)

states that, for the patent application/patent identified above, it is (choose **one** of options 1, 2, 3 or 4 below):

1. ☒ The assignee of the entire right, title, and interest.
2. ☐ An assignee of less than the entire right, title and interest (check applicable box):
   - ☐ The extent (by percentage) of its ownership interest is _____ %). Additional Statement(s) by the owners holding the balance of the interest must be submitted to account for 100% of the ownership interest.
   - ☐ There are unspecified percentages of ownership. The other parties, including inventors, who together own the entire right, title and interest are:

   Additional Statement(s) by the owners holding the balance of the interest must be submitted to account for 100% of the ownership interest.
3. ☐ The assignee of an undivided interest in the entirety (a complete assignment from one of the joint inventors was made). The other parties, including inventors, who together own the entire right, title, and interest are:

   Additional Statement(s) by the owner(s) holding the balance of the interest must be submitted to account for the entire right, title, and interest.
4. ☐ The recipient, via a court proceeding or the like (*e.g.*, bankruptcy, probate), of an undivided interest in the entirety (a complete transfer of ownership interest was made). The certified document(s) showing the transfer is attached.

The interest identified in option 1, 2 or 3 above (not option 4) is evidenced by either (choose **one** of options A or B below):

A. ☒ An assignment from the inventor(s) of the application/patent identified above. The assignment was recorded in the United States Patent and Trademark Office at Reel 041967, Frame 0309, or for which a copy thereof is attached.

B. ☐ A chain of title from the inventor(s), of the patent application/patent identified above, to the current assignee as follows:

1. From: _____ To: _____
   The document was recorded in the United States Patent and Trademark Office at Reel _____, Frame _____, or for which a copy thereof is attached.
2. From: _____ To: _____
   The document was recorded in the United States Patent and Trademark Office at Reel _____, Frame _____, or for which a copy thereof is attached.
3. From: _____ To: _____
   The document was recorded in the United States Patent and Trademark Office at Reel _____, Frame _____, or for which a copy thereof is attached.

4. From: _____ To: _____
The document was recorded in the United States Patent and Trademark Office at
Reel _____, Frame _____, or for which a copy thereof is attached.

5. From: _____ To: _____
The document was recorded in the United States Patent and Trademark Office at
Reel _____, Frame _____, or for which a copy thereof is attached.

6. From: _____ To: _____
The document was recorded in the United States Patent and Trademark Office at
Reel _____, Frame _____, or for which a copy thereof is attached.

☐ Additional documents in the chain of the title are listed on a supplemental sheet(s).

☒ As required by 37 C.F.R. 3.73(c)(1)(i), the documentary evidence of the chain of title from the original owner to the assignee was, or concurrently is being, submitted for recordation pursuant to 37 C.F.R. 3.11.

[NOTE: A separate copy (*i.e.,* a true copy of the original assignment document(s)) must be submitted to Assignment Division in accordance with 37 CFR Part 3, to record the assignment in the records of the USPTO. See MPEP 302.08]

The undersigned (whose title is supplied below) is authorized to act on behalf of the assignee.

/Travis D. Boone/	5 February 2018
Signature	Date
Travis D. Boone	52635
Printed or Typed Name	Title or Registration Number

Attorney Docket No. 0079124-000129

COMBINED DECLARATION AND ASSIGNMENT
(JOINT)

As one of the below named inventors, I hereby declare that this Declaration is directed to:

(1) ☒ PCT international application number PCT/EP2015/052537, filed on February 6, 2015, entitled DETECTING TOOTH SHADE; or

(2) ☐ the attached application entitled _____.

DECLARATION

As one of the below named inventors, I further declare that:

The above-identified application was made or authorized to be made by me.

I believe that I am an original joint inventor of a claimed invention in the application.

I have reviewed and understand the contents of the above-identified application, including the claims.

I acknowledge the duty to disclose to the U.S. Patent and Trademark Office all information known to me to be material to patentability as defined in Title 37, Code of Federal Regulations, § 1.56.

I hereby acknowledge that any willful false statement made in this declaration is punishable under 18 U.S.C. 1001 by fine or imprisonment of not more than five (5) years, or both.

ASSIGNMENT

THIS ASSIGNMENT, by the undersigned inventors (hereinafter referred to as "the Assignors"), respectively, witnesseth:

WHEREAS, the Assignors have invented certain new and useful improvements set forth in the application for Letters Patent of the United States identified above;

WHEREAS, 3Shape A/S, a corporation duly organized under and pursuant to the laws of DENMARK and having a principal place of business at Holmens Kanal 7, DK-1060 Copenhagen K, DENMARK (hereinafter referred to as "the Assignee"), is desirous of acquiring the entire right, title, and interest in and to said inventions, the right to file applications on said inventions and the entire right, title and interest in and to any applications, including provisional applications for Letters Patent of the United States or other countries claiming priority to said application, and in and to any Letters Patent or Patents, United States or foreign, to be obtained therefor and thereon.

NOW, THEREFORE, for good and sufficient consideration, the receipt of which is hereby acknowledged, the Assignors have sold, assigned, transferred, and set over, and by these presents does sell, assign, transfer, and set over, unto the Assignee, its successors, legal representatives, and assigns the entire right, title, and interest in and to the above-mentioned inventions, the right to file applications on said inventions and the entire right, title and interest in and to any applications for Letters Patent of the United States or other countries claiming priority to said applications, and any and all Letters Patent or Patents of the United States of America and all foreign countries that may be granted therefor and thereon, and in and to any and all applications claiming priority to said applications, divisions, continuations, and continuations-in-part of said applications, and reissues and extensions of said Letters Patent or Patents, and all rights under the International

Convention for the Protection of Industrial Property, the same to be held and enjoyed by the Assignee, for its own use and behoof and the use and behoof of its successors, legal representatives, and assigns, to the full end of the term or terms for which Letters Patent or Patents may be granted as fully and entirely as the same would have been held and enjoyed by the Assignors had this sale and assignment not been made:

AND for the same consideration, the Assignors hereby covenant and agree to and with the Assignee, its successors, legal representatives, and assigns, that, at the time of execution and delivery of these presents, the Assignors are the sole and lawful owners of the entire right, title, and interest in and to the inventions set forth in said applications and said applications, including provisional applications, above-mentioned, and that the same are unencumbered, and that the Assignors have good and full right and lawful authority to sell and convey the same in the manner herein set forth;

AND for the same consideration, the Assignors hereby covenant and agree to and with the Assignee, its successors, legal representatives, and assigns that the Assignors will, whenever counsel of the Assignee, or the counsel of its successors, legal representatives, and assigns, shall advise that any proceeding in connection with said inventions or said applications for Letters Patent or Patents, or any proceeding in connection with Letters Patent or Patents for said inventions in any country, including interference proceedings, is lawful and desirable, or that any application claiming priority to said application, division, continuation, or continuation-in-part of any applications for Letters Patent or Patents, or any reissue or extension of any Letters Patent or Patents to be obtained thereon, is lawful and desirable, sign all papers and documents, take all lawful oaths, and do all acts necessary or required to be done for the procurement, maintenance, enforcement, and defense of Letters Patent or Patents for said inventions, without charge to the Assignee, its successors, legal representatives, and assigns, but at the cost and expense of the Assignee, its successors, legal representatives, and assigns;

AND the Assignors hereby request the Commissioner of Patents to issue any and all said Letters Patent of the United States to the Assignee as the Assignee of said inventions, the Letters Patent to be issued for the sole use and behoof of the Assignee, its successors, legal representatives, and assigns.

Date	Name	Signature
30/3-2017	BO ESBECH	Bo Esbech
31/3 2017	RUNE FISKER	
30/3 2017	LARS HENRIKSEN	
31/3 2017	TAIS CLAUSEN	

PTO/AIA/14 (11-15)
Approved for use through 04/30/2017. OMB 0651-0032
U.S. Patent and Trademark Office; U.S. DEPARTMENT OF COMMERCE
Under the Paperwork Reduction Act of 1995, no persons are required to respond to a collection of information unless it contains a valid OMB control number.

Application Data Sheet 37 CFR 1.76	Attorney Docket Number	0079124-000162
	Application Number	
Title of Invention	DETECTING TOOTH SHADE	

The application data sheet is part of the provisional or nonprovisional application for which it is being submitted. The following form contains the bibliographic data arranged in a format specified by the United States Patent and Trademark Office as outlined in 37 CFR 1.76.
This document may be completed electronically and submitted to the Office in electronic format using the Electronic Filing System (EFS) or the document may be printed and included in a paper filed application.

Secrecy Order 37 CFR 5.2:

☐ Portions or all of the application associated with this Application Data Sheet may fall under a Secrecy Order pursuant to 37 CFR 5.2 (Paper filers only. Applications that fall under Secrecy Order may not be filed electronically.)

Inventor Information:

Inventor 1 Remove

Legal Name

Prefix	Given Name	Middle Name	Family Name	Suffix
	Bo		ESBECH	

Residence Information (Select One) US Residency ● Non US Residency Active US Military Service

City	Gentofte	Country of Residence i	DK

Mailing Address of Inventor:

Address 1	Dalvej 25		
Address 2			
City	Gentofte	State/Province	
Postal Code	DK-2820	Country i	DK

Inventor 2 Remove

Legal Name

Prefix	Given Name	Middle Name	Family Name	Suffix
	Rune		FISKER	

Residence Information (Select One) US Residency ◉ Non US Residency Active US Military Service

City	Virum	Country of Residence i	DK

Mailing Address of Inventor:

Address 1	Kaplevej 87		
Address 2			
City	Virum	State/Province	
Postal Code	DK-2830	Country i	DK

Inventor 3 Remove

Legal Name

Under the Paperwork Reduction Act of 1995, no persons are required to respond to a collection of information unless it contains a valid OMB control number.

Application Data Sheet 37 CFR 1.76	Attorney Docket Number	0079124-000162
	Application Number	
Title of Invention	DETECTING TOOTH SHADE	

Prefix	Given Name	Middle Name	Family Name	Suffix
	Lars		HENRIKSEN	

Residence Information (Select One) US Residency ◉ Non US Residency Active US Military Service

City	Bagsværd	Country of Residence i	DK

Mailing Address of Inventor:

Address 1	Mosedybet 10		
Address 2			
City	Bagsværd	State/Province	
Postal Code	DK-2880	Country i	DK

Inventor 4 Remove

Legal Name

Prefix	Given Name	Middle Name	Family Name	Suffix
	Tais		CLAUSEN	

Residence Information (Select One) US Residency ◉ Non US Residency Active US Military Service

City	Klagshamn	Country of Residence i	SE

Mailing Address of Inventor:

Address 1	Signe Löfdahls Väg 12		
Address 2			
City	Klagshamn	State/Province	
Postal Code	S-21851	Country i	SE

All Inventors Must Be Listed - Additional Inventor Information blocks may be generated within this form by selecting the **Add** button. Add

Correspondence Information:

Enter either Customer Number or complete the Correspondence Information section below.
For further information see 37 CFR 1.33(a).

☐ **An Address is being provided for the correspondence Information of this application.**

Customer Number	21839		
Email Address		Add Email	Remove Email

PTO/AIA/14 (11-15)
Approved for use through 04/30/2017. OMB 0651-0032
U.S. Patent and Trademark Office; U.S. DEPARTMENT OF COMMERCE
Under the Paperwork Reduction Act of 1995, no persons are required to respond to a collection of information unless it contains a valid OMB control number.

Application Data Sheet 37 CFR 1.76	Attorney Docket Number	0079124-000162
	Application Number	
Title of Invention	DETECTING TOOTH SHADE	

Application Information:

Title of the Invention	DETECTING TOOTH SHADE		
Attorney Docket Number	0079124-000162	**Small Entity Status Claimed**	☐
Application Type	Nonprovisional		
Subject Matter	Utility		
Total Number of Drawing Sheets (if any)	9	**Suggested Figure for Publication (if any)**	

Filing By Reference:

Only complete this section when filing an application by reference under 35 U.S.C. 111(c) and 37 CFR 1.57(a). Do not complete this section if application papers including a specification and any drawings are being filed. Any domestic benefit or foreign priority information must be provided in the appropriate section(s) below (i.e., "Domestic Benefit/National Stage Information" and "Foreign Priority Information").

For the purposes of a filing date under 37 CFR 1.53(b), the description and any drawings of the present application are replaced by this reference to the previously filed application, subject to conditions and requirements of 37 CFR 1.57(a).

Application number of the previously filed application	Filing date (YYYY-MM-DD)	Intellectual Property Authority or Country

Publication Information:

☐ Request Early Publication (Fee required at time of Request 37 CFR 1.219)

☐ **Request Not to Publish.** I hereby request that the attached application not be published under 35 U.S.C. 122(b) and certify that the invention disclosed in the attached application **has not and will not** be the subject of an application filed in another country, or under a multilateral international agreement, that requires publication at eighteen months after filing.

Representative Information:

Representative information should be provided for all practitioners having a power of attorney in the application. Providing this information in the Application Data Sheet does not constitute a power of attorney in the application (see 37 CFR 1.32).
Either enter Customer Number or complete the Representative Name section below. If both sections are completed the customer Number will be used for the Representative Information during processing.

Please Select One:	● Customer Number	US Patent Practitioner	○ Limited Recognition (37 CFR 11.9)
Customer Number	21839		

Under the Paperwork Reduction Act of 1995, no persons are required to respond to a collection of information unless it contains a valid OMB control number.

Application Data Sheet 37 CFR 1.76	Attorney Docket Number	0079124-000162
	Application Number	
Title of Invention	DETECTING TOOTH SHADE	

Domestic Benefit/National Stage Information:

This section allows for the applicant to either claim benefit under 35 U.S.C. 119(e), 120, 121, 365(c), or 386(c) or indicate National Stage entry from a PCT application. Providing benefit claim information in the Application Data Sheet constitutes the specific reference required by 35 U.S.C. 119(e) or 120, and 37 CFR 1.78.
When referring to the current application, please leave the "Application Number" field blank.

Prior Application Status	Pending		Remove
Application Number	Continuity Type	Prior Application Number	Filing or 371(c) Date (YYYY-MM-DD)
	Continuation of	15117078	2016-08-05
Prior Application Status	Expired		Remove
Application Number	Continuity Type	Prior Application Number	Filing or 371(c) Date (YYYY-MM-DD)
15117078	a 371 of international	PCT/EP2015/052537	2015-02-06

Additional Domestic Benefit/National Stage Data may be generated within this form by selecting the **Add** button. Add

Foreign Priority Information:

This section allows for the applicant to claim priority to a foreign application. Providing this information in the application data sheet constitutes the claim for priority as required by 35 U.S.C. 119(b) and 37 CFR 1.55. When priority is claimed to a foreign application that is eligible for retrieval under the priority document exchange program (PDX)[i] the information will be used by the Office to automatically attempt retrieval pursuant to 37 CFR 1.55(i)(1) and (2). Under the PDX program, applicant bears the ultimate responsibility for ensuring that a copy of the foreign application is received by the Office from the participating foreign intellectual property office, or a certified copy of the foreign priority application is filed, within the time period specified in 37 CFR 1.55(g)(1).

Remove

Application Number	Country[i]	Filing Date (YYYY-MM-DD)	Access Code[i] (if applicable)
PA 2014 70066	DK	2014-02-07	

Additional Foreign Priority Data may be generated within this form by selecting the **Add** button. Add

Statement under 37 CFR 1.55 or 1.78 for AIA (First Inventor to File) Transition Applications

☐ This application (1) claims priority to or the benefit of an application filed before March 16, 2013 and (2) also contains, or contained at any time, a claim to a claimed invention that has an effective filing date on or after March 16, 2013.
NOTE: By providing this statement under 37 CFR 1.55 or 1.78, this application, with a filing date on or after March 16, 2013, will be examined under the first inventor to file provisions of the AIA.

Application Data Sheet 37 CFR 1.76	Attorney Docket Number	0079124-000162
	Application Number	
Title of Invention	DETECTING TOOTH SHADE	

Authorization or Opt-Out of Authorization to Permit Access:

When this Application Data Sheet is properly signed and filed with the application, applicant has provided written authority to permit a participating foreign intellectual property (IP) office access to the instant application-as-filed (see paragraph A in subsection 1 below) and the European Patent Office (EPO) access to any search results from the instant application (see paragraph B in subsection 1 below).

Should applicant choose not to provide an authorization identified in subsection 1 below, applicant **must opt-out** of the authorization by checking the corresponding box A or B or both in subsection 2 below.

NOTE: This section of the Application Data Sheet is **ONLY** reviewed and processed with the **INITIAL** filing of an application. After the initial filing of an application, an Application Data Sheet cannot be used to provide or rescind authorization for access by a foreign IP office(s). Instead, Form PTO/SB/39 or PTO/SB/69 must be used as appropriate.

1. Authorization to Permit Access by a Foreign Intellectual Property Office(s)

A. Priority Document Exchange (PDX) - Unless box A in subsection 2 (opt-out of authorization) is checked, the undersigned hereby **grants the USPTO authority** to provide the European Patent Office (EPO), the Japan Patent Office (JPO), the Korean Intellectual Property Office (KIPO), the State Intellectual Property Office of the People's Republic of China (SIPO), the World Intellectual Property Organization (WIPO), and any other foreign intellectual property office participating with the USPTO in a bilateral or multilateral priority document exchange agreement in which a foreign application claiming priority to the instant patent application is filed, access to: (1) the instant patent application-as-filed and its related bibliographic data, (2) any foreign or domestic application to which priority or benefit is claimed by the instant application and its related bibliographic data, and (3) the date of filing of this Authorization. See 37 CFR 1.14(h)(1).

B. Search Results from U.S. Application to EPO - Unless box B in subsection 2 (opt-out of authorization) is checked, the undersigned hereby **grants the USPTO authority** to provide the EPO access to the bibliographic data and search results from the instant patent application when a European patent application claiming priority to the instant patent application is filed. See 37 CFR 1.14(h)(2).

The applicant is reminded that the EPO's Rule 141(1) EPC (European Patent Convention) requires applicants to submit a copy of search results from the instant application without delay in a European patent application that claims priority to the instant application.

2. Opt-Out of Authorizations to Permit Access by a Foreign Intellectual Property Office(s)

☐ A. Applicant **DOES NOT** authorize the USPTO to permit a participating foreign IP office access to the instant application-as-filed. If this box is checked, the USPTO will not be providing a participating foreign IP office with any documents and information identified in subsection 1A above.

☐ B. Applicant **DOES NOT** authorize the USPTO to transmit to the EPO any search results from the instant patent application. If this box is checked, the USPTO will not be providing the EPO with search results from the instant application.

NOTE: Once the application has published or is otherwise publicly available, the USPTO may provide access to the application in accordance with 37 CFR 1.14.

Under the Paperwork Reduction Act of 1995, no persons are required to respond to a collection of information unless it contains a valid OMB control number.

Application Data Sheet 37 CFR 1.76	Attorney Docket Number	0079124-000162
	Application Number	
Title of Invention	DETECTING TOOTH SHADE	

Applicant Information:

Providing assignment information in this section does not substitute for compliance with any requirement of part 3 of Title 37 of CFR to have an assignment recorded by the Office.

Applicant 1 Remove

If the applicant is the inventor (or the remaining joint inventor or inventors under 37 CFR 1.45), this section should not be completed. The information to be provided in this section is the name and address of the legal representative who is the applicant under 37 CFR 1.43; or the name and address of the assignee, person to whom the inventor is under an obligation to assign the invention, or person who otherwise shows sufficient proprietary interest in the matter who is the applicant under 37 CFR 1.46. If the applicant is an applicant under 37 CFR 1.46 (assignee, person to whom the inventor is obligated to assign, or person who otherwise shows sufficient proprietary interest) together with one or more joint inventors, then the joint inventor or inventors who are also the applicant should be identified in this section. Clear

● Assignee	Legal Representative under 35 U.S.C. 117	Joint Inventor
Person to whom the inventor is obligated to assign.	Person who shows sufficient proprietary interest	

If applicant is the legal representative, indicate the authority to file the patent application, the inventor is:

Name of the Deceased or Legally Incapacitated Inventor:

If the Applicant is an Organization check here. ☒

Organization Name	3SHAPE A/S		
Mailing Address Information For Applicant:			
Address 1	Holmens Kanal 7		
Address 2			
City	Copenhagen K	**State/Province**	
Country	DK	Postal Code	DK-1060
Phone Number		Fax Number	
Email Address			

Additional Applicant Data may be generated within this form by selecting the Add button. Add

Assignee Information including Non-Applicant Assignee Information:

Providing assignment information in this section does not substitute for compliance with any requirement of part 3 of Title 37 of CFR to have an assignment recorded by the Office.

Under the Paperwork Reduction Act of 1995, no persons are required to respond to a collection of information unless it contains a valid OMB control number.

Application Data Sheet 37 CFR 1.76	Attorney Docket Number	0079124-000162
	Application Number	
Title of Invention	DETECTING TOOTH SHADE	

Assignee 1

Complete this section if assignee information, including non-applicant assignee information, is desired to be included on the patent application publication. An assignee-applicant identified in the "Applicant Information" section will appear on the patent application publication as an applicant. For an assignee-applicant, complete this section only if identification as an assignee is also desired on the patent application publication.

Remove

If the Assignee or Non-Applicant Assignee is an Organization check here. ☒

Organization Name	3SHAPE A/S

Mailing Address Information For Assignee including Non-Applicant Assignee:

Address 1	Holmens Kanal 7		
Address 2			
City	Copenhagen K	**State/Province**	
Country i	DK	Postal Code	DK-1060
Phone Number		Fax Number	
Email Address			

Additional Assignee or Non-Applicant Assignee Data may be generated within this form by selecting the Add button. Add

Signature:

Remove

NOTE: This Application Data Sheet must be signed in accordance with 37 CFR 1.33(b). **However, if this Application Data Sheet is submitted with the INITIAL filing of the application and either box A or B is not checked in subsection 2 of the "Authorization or Opt-Out of Authorization to Permit Access" section, then this form must also be signed in accordance with 37 CFR 1.14(c).**

This Application Data Sheet **must** be signed by a patent practitioner if one or more of the applicants is a **juristic entity** (e.g., corporation or association). If the applicant is two or more joint inventors, this form must be signed by a patent practitioner, **all** joint inventors who are the applicant, or one or more joint inventor-applicants who have been given power of attorney (e.g., see USPTO Form PTO/AIA/81) on behalf of **all** joint inventor-applicants.

See 37 CFR 1.4(d) for the manner of making signatures and certifications.

Signature	/Travis D. Boone/			Date (YYYY-MM-DD)	2018-02-05
First Name	Travis D.	Last Name	Boone	Registration Number	52635

Additional Signature may be generated within this form by selecting the Add button. Add

Application Data Sheet 37 CFR 1.76	Attorney Docket Number	0079124-000162
	Application Number	
Title of Invention	DETECTING TOOTH SHADE	

This collection of information is required by 37 CFR 1.76. The information is required to obtain or retain a benefit by the public which is to file (and by the USPTO to process) an application. Confidentiality is governed by 35 U.S.C. 122 and 37 CFR 1.14. This collection is estimated to take 23 minutes to complete, including gathering, preparing, and submitting the completed application data sheet form to the USPTO. Time will vary depending upon the individual case. Any comments on the amount of time you require to complete this form and/or suggestions for reducing this burden, should be sent to the Chief Information Officer, U.S. Patent and Trademark Office, U.S. Department of Commerce, P.O. Box 1450, Alexandria, VA 22313-1450. DO NOT SEND FEES OR COMPLETED FORMS TO THIS ADDRESS. **SEND TO: Commissioner for Patents, P.O. Box 1450, Alexandria, VA 22313-1450.**

Privacy Act Statement

The Privacy Act of 1974 (P.L. 93-579) requires that you be given certain information in connection with your submission of the attached form related to a patent application or patent. Accordingly, pursuant to the requirements of the Act, please be advised that: (1) the general authority for the collection of this information is 35 U.S.C. 2(b)(2); (2) furnishing of the information solicited is voluntary; and (3) the principal purpose for which the information is used by the U.S. Patent and Trademark Office is to process and/or examine your submission related to a patent application or patent. If you do not furnish the requested information, the U.S. Patent and Trademark Office may not be able to process and/or examine your submission, which may result in termination of proceedings or abandonment of the application or expiration of the patent.

The information provided by you in this form will be subject to the following routine uses:

1 The information on this form will be treated confidentially to the extent allowed under the Freedom of Information Act (5 U.S.C. 552) and the Privacy Act (5 U.S.C. 552a). Records from this system of records may be disclosed to the Department of Justice to determine whether the Freedom of Information Act requires disclosure of these records.

2. A record from this system of records may be disclosed, as a routine use, in the course of presenting evidence to a court, magistrate, or administrative tribunal, including disclosures to opposing counsel in the course of settlement negotiations.

3 A record in this system of records may be disclosed, as a routine use, to a Member of Congress submitting a request involving an individual, to whom the record pertains, when the individual has requested assistance from the Member with respect to the subject matter of the record.

4. A record in this system of records may be disclosed, as a routine use, to a contractor of the Agency having need for the information in order to perform a contract. Recipients of information shall be required to comply with the requirements of the Privacy Act of 1974, as amended, pursuant to 5 U.S.C. 552a(m).

5. A record related to an International Application filed under the Patent Cooperation Treaty in this system of records may be disclosed, as a routine use, to the International Bureau of the World Intellectual Property Organization, pursuant to the Patent CooperationTreaty.

6. A record in this system of records may be disclosed, as a routine use, to another federal agency for purposes of National Security review (35 U.S.C. 181) and for review pursuant to the Atomic Energy Act (42 U.S.C. 218(c)).

7. A record from this system of records may be disclosed, as a routine use, to the Administrator, General Services, or his/her designee, during an inspection of records conducted by GSA as part of that agency's responsibility to recommend improvements in records management practices and programs, under authority of 44 U.S.C. 2904 and 2906. Such disclosure shall be made in accordance with the GSA regulations governing inspection of records for this purpose, and any other relevant (i.e., GSA or Commerce) directive. Such disclosure shall not be used to make determinations about individuals.

8. A record from this system of records may be disclosed, as a routine use, to the public after either publication of the application pursuant to 35 U.S.C. 122(b) or issuance of a patent pursuant to 35 U.S.C. 151. Further, a record may be disclosed, subject to the limitations of 37 CFR 1.14, as a routine use, to the public if the record was filed in an application which became abandoned or in which the proceedings were terminated and which application is referenced by either a published application, an application open to public inspections or an issued patent.

9. A record from this system of records may be disclosed, as a routine use, to a Federal, State, or local law enforcement agency, if the USPTO becomes aware of a violation or potential violation of law or regulation.

DETECTING TOOTH SHADE

Cross Reference to Related Applications

The present application is a continuation of U.S. Application No. 15/117,078, filed on August 5, 2016, which is a U.S. national stage of International Application No. PCT/EP2015/052537, filed on February 6, 2015, which claims the benefit of Danish Application No. PA 2014-70066, filed on February 7, 2014. The entire contents of each of U.S. Application No. 15/117,078, International Application No. PCT/EP2015/052537, and Danish Application No. PA 2014-700665 are hereby incorporated herein by reference in their entirety.

Technical Field

This invention generally relates to methods and a user interfaces for determining the shade of a patient's tooth or teeth and for utilizing the determined tooth shades for designing and manufacturing dental restorations.

When designing and manufacturing a dental restoration for a patient, such as a crown or a bridge restoration, it is advantageous that both the shape and shade of the manufactured restoration is adapted to the patient's natural teeth surrounding the restoration. If the shade of the restoration differs significantly from the surrounding natural teeth, e.g. is significantly darker or brighter than these, the restoration appear artificial and deteriorate the aesthetic impression of the patient's smile.

The tooth color can be represented in many different color spaces, such as the L*C*h* color space representing color in terms of Lightness, Chroma and Hue, or in the L*a*b* color space as described e.g. by Hassel et al. (Hassel 2012) and Dozic et al. (Dozic 2007).

The L*a*b* color space has the advantage that it is designed to approximate human vision with the L* component closely matches human perception of lightness.

In order to aid dental technicians in their manual work of manufacturing a restoration which appears natural, the tooth colors are often expressed in terms of reference tooth shade values of a tooth shade system (often referred to as a tooth shade guide). Each reference tooth shade value in a tooth shade guide represents a predetermined and known tooth color value and often correspond to the color of commercially available ceramics for the production of dental restorations. This is e.g. the case for the VITA 3D-Master or the VITA Classic shade guides provided by VITA Zahnfabrik, Germany.

In the VITA 3D-Master system, tooth shades are expressed in codes referring to the L*C*h* color space, where each code is constructed according to (Lightness, hue, Chroma). One example of a tooth shade value is 3R1.5 where “3” refers to the lightness, “R” to the hue and “1.5” to the Chroma of the tooth. This allows the dentist to describe the shade of the patient’s tooth in terms that a dental technician immediately understands, such that the technician will know from which ceramics he should manufacture the restoration to provide that it has the correct shade.

When manually determining which reference tooth shade value best matches the color of a patient’s tooth, the dentist holds different pre-manufactured teeth of the shade guide at the tooth for comparison. Often a picture is taken with the pre-manufactured structures arranged at the teeth. The technician who produces the prosthetic then uses the picture in evaluating which ceramic must be used for the different parts of the restoration based on the picture. This process is both time consuming and inaccurate.

Summary

Disclosed is a method for determining shade of a patient's tooth, wherein the method comprises:

- obtaining a digital 3D representation of the tooth, where the digital 3D representation comprises shape data and texture data for the tooth; and
- determining a tooth shade value for at least one point on the tooth based on the texture data of the corresponding point of the digital 3D representation and on known texture values of one or more reference tooth shade values.

Disclosed is a user interface for determining and displaying shade of a patient's tooth, wherein the user interface is configured for:

- obtaining a digital 3D representation of the tooth, said digital 3D representation comprising shape data and texture data for the tooth;
- displaying at least the shape data of the digital 3D representation such that the shape of the tooth is visualized in the user interface;
- determining a tooth shade value for at least one point on the tooth based on the texture data of the corresponding point of the digital 3D representation and on known texture values of one or more reference tooth shade values; and
- displaying the determined tooth shade value.

The texture data of the digital 3D representation expresses the texture of the tooth. The texture data can be a texture profile expressing the variation in the texture over the tooth. The shape data of the digital 3D representation expresses the shape of the tooth.

In some embodiments, the texture information comprises at least one of tooth color or surface roughness.

When the texture information comprises tooth color information, the texture data expressing a texture profile of the tooth may be color data expressing a color profile of the tooth, and the tooth shade value for a point on the tooth may be derived by comparing the color data of the corresponding point of the digital 3D representation with known color values of one or more reference tooth shade values.

Determining both the tooth shade value from a digital 3D representation comprising both shape data expressing the shape of the tooth and texture data expressing a texture profile of the tooth provides the advantage that shade and geometry information are directly linked. This e.g. advantageous e.g. in CAD/CAM dentistry where dental restorations are designed using Computer Aided Design (CAD) tools and subsequently manufactured from the design using Computer Aided Design (CAM) tools. The material used for the manufacture of the dental restoration can then be selected based on the determined tooth shade value.

In many cases, the dental restoration is manufactured with a shade profile where the shade differs from the incisal edge towards cervical end of the restoration. The disclosed invention allows the operator to determine tooth shade values for several points on the tooth such that a shade profile can be determined for the dental restoration. Multi-shaded milling blocks exits which mimics standard tooth shade profiles. Having the shape data and the tooth shade values linked via the digital 3D representation provides that the correct portion of the multi-shaded milling block can be milled out. The remaining portion of the multi-shaded milling block forming the dental restoration will then have a shape and shade profile which closely resembles that of a natural tooth.

In some embodiments, obtaining the digital 3D representation of the tooth comprises recording a series of sub-scans of the tooth, where at least one of said sub-scans comprises both texture information and geometry information for said tooth, and generating the digital 3D representation of the tooth from the recorded series of sub-scans.

When a plurality of the sub-scans comprise texture information, the texture data for the digital 3D representation can be derived by combining the texture information of the several sub-scans.

The recorded sub-scans comprise at least data of the tooth for which the shade is determined, but potentially also of the neighboring teeth such that for example the shape and location of the neighboring teeth can be taken into account when designing a dental restoration for the tooth. Texture information and texture data for the neighboring teeth can also be used to determine the shade value for the tooth, e.g. by interpolation of the shades determined for the neighbor teeth.

In some embodiments, the method comprises creating a shade profile for the tooth from shade values determined for one or more of points on the tooth.

The shade profile of natural teeth often has a brighter shade at the incisal edge of the tooth and gradually changes into a darker shade towards the cervical end of the tooth, i.e. the end at the patient's gingiva.

When the tooth shade value is determined for one point only the tooth shade profile may be generated based on knowledge of the normal tooth shade profile for that particular type of tooth and patient. This knowledge may relate to how the shade profile normally changes over the tooth, the age and gender of the patients, etc.

Often the profile will be based on tooth shades determined in several points on the tooth to provide the most reliable tooth shade profile.

In some embodiments the user interface is configured for creating a shade profile for the tooth from tooth shade values determined for one or more points on the tooth.

In some embodiments, the tooth shade profile can be created by interpolation of tooth shade values determined for points distributed over the tooth surface with some distance between the points. The tooth shade value for some parts of the tooth surface are then not derived directly from sub-scan texture information relating to these parts but from the determined tooth shade values for other parts/points on the tooth surface. A tooth shade profile for the entire labial/buccal surface of the tooth can thus be created from a selection of points on the surface providing a fast and often sufficiently accurate procedure for creating the tooth shade profile. The interpolation of the tooth shade values can be realized by an interpolation in each of the coordinates of the color space used to describe the tooth color.

In some embodiments, the tooth shade profile comprises a one or more tooth shade regions on the tooth surface where an average tooth shade is derived for each region from tooth shade values determined for a number of points within the region.
The tooth shade region can be defined by a structure encircling a portion of the tooth surface in the digital 3D representation, where either the operator or a computer implemented algorithm decides where each geometric structure is located on the digital 3D representation. Different shapes (e.g. circles, squares, or rectangles) and sizes (e.g. corresponding to a few millimeters) of the geometric structure can be used. The number of points within the geometrical structure can be increased to provide a more accurate measure of the shade or reduced to provide a faster calculation.

The average tooth shade value for a region can e.g. be derived as a weighted average where the tooth shade value for points in the center of the structure is assigned a higher weight than tooth shade value of points closer to the boundary.

The tooth surface can also be divided into a coronal, a middle and a cervical region. Some natural teeth has a shade profile which can be expressed by such a division and many dentists and dental technicians are familiar with such a division

In some embodiments, tooth shade values are determined for a plurality of teeth, i.e. on parts of the digital 3D representation corresponding to two or more teeth, and a tooth shade value and/or a tooth shade profile for each of these teeth is created from the determined tooth shade values.

In some embodiments, the texture data at least partly are derived by combining the texture information from corresponding parts of a number of the sub-scans.

The digital 3D representation can be generated through registration of sub-scans into a common coordinate system by matching overlapping sections of sub-scans, i.e. the sections of the sub-scans which relate to the same region of the tooth. When two or more sub-scans also comprise texture information relating to the same region of the tooth, deriving the texture data for this region in the digital 3D representation can comprise combining the corresponding texture information, i.e. the texture information in the sub-scans corresponding to the same sections of the tooth.

Deriving the texture data based on texture information from two or more sub-scan can provide a more accurate measurement of the texture data. The texture information of one sub-scan for a particular region of the tooth may be unreliable e.g. due to the angle between the surface in this region and the scanner when this particular sub-scan was recorded. The combination of texture information from several sub-scans can provide a more reliable color.

In some embodiments, combining the texture information from the sub-scans comprises interpolating the texture information, i.e. texture information from parts of the sub-scans

corresponding to a point on the tooth are interpolated to determine the texture data for that point.

Such an interpolation can provide that the determined texture data is more accurate e.g. in cases where the texture information for a point on the tooth is not linearly varying over the sub-scans such that a simple averaging will not provide the best result.

In some embodiments, combining the texture information from the sub-scans comprises calculating an average value of the texture information, i.e. texture data for a point on the digital 3D representation are determined by averaging the texture information of the sub-scans corresponding to that point on the tooth.

In some embodiments, the calculated average value is a weighted average of the texture information.

This approach has the advantage that the derived texture data of the digital 3D representation are not as sensitive to errors in the texture information of a single sub-scan.

Such errors can be caused by several factors. One factor is the angle between the optical path of the probe light at the tooth surface and the tooth surface itself. When utilizing e.g. the focus scanning technique, the texture data for a point on the tooth is preferably derived from a number of sub-scans where at least some of the sub-scans are recorded at different orientations of the scanner relative to the teeth. The sections of the sub-scans relating to this point are hence acquired at different angles relative to the tooth surface in this point.

A portion of a sub-scan recorded from a surface perpendicular to the optical path of the probe light at the tooth may be dominated by specular reflected light which does not describe the texture of the tooth but rather the spectral distribution of the probe light. A

portion of a sub-scan recorded from a tooth surface almost parallel to the optical path is often quite weak and hence often provide an erroneous detection of the texture at that point.

In some embodiments, the texture information from parts of a sub-scan relating to a tooth surface which is substantially perpendicular or parallel to the optical path are assigned a low weight in the weighted averaging of the texture information to determine the texture data for the point.

The orientation of the scanner relative to the tooth when a sub-scan is acquired can be determined from the shape of the sub-scan. Parts of the sub-scan relating to tooth surfaces which are substantially parallel or perpendicular to the optical path can thus immediately be detected in the sub-scan such that the texture information of the corresponding parts are assigned at low weight when determining the texture data for this point from a series of sub-scans.

A specular reflection from the tooth often has an intensity which is significantly higher than that of e.g. diffuse light from surfaces which have an oblique angle relative to the optical path. In some cases the specular reflection will saturate the pixels of the image sensor used for the recording of the sub-scans.

In some embodiments, the method comprises detecting saturated pixels in the recorded sub-scans and assigning a low weight to the texture information of the saturated pixels when combining the texture information from the sub-scans, i.e. when calculating the weighted average of the texture information.

Specular reflection from a tooth surface may also be detected from a comparison between the spectrum of the light received from the tooth and that of the probe light. If these spectra a very similar it indicates that the tooth has a perfectly white surface which is not

natural. Such texture information may thus be assigned a low weight in a weighted average of texture information.

In some embodiments determining the tooth shade value for the point comprises selecting the reference tooth shade value with known texture value closest to the texture data of the point.

When the texture data comprises color data, selecting the tooth shade value of the point can comprise calculating the color difference between the determined color data in the point and the color data of the reference tooth shade values. This difference can e.g. be calculated as a Euclidian distance in the used color space. As an example, Dozic et al. (Dozic 2007) describes that the Euclidian distance ΔE between two points (L_1^*, a_1^*, b_1^*) and (L_2^*, a_2^*, b_2^*) in the L*a*b* color space is given by:

$$\Delta E = \sqrt[2]{(L_1^* - L_2^*)^2 + (a_1^* - a_2^*)^2 + (b_1^* - b_2^*)^2}$$

Selecting the tooth shade value can then comprise determining for which of the reference tooth shades the color difference, i.e. the Euclidian distance, is the smallest.

In some embodiments determining the tooth shade value for the point comprises an interpolation of the two or more reference tooth shade values having known texture values close to the texture data of the point.

This interpolation provides that the tooth shade can be represented with a more detailed solution than what is provided by the tooth shade standard used to describe the tooth shade. For instance when using a Lightness-Hue-Chroma code a tooth shade value of 1.5M2.5 can be determined for the tooth by interpolation of Lightness values of 1 and 2, and Chroma values of 2 and 3.

The tooth shade value can be displayed in a user interface e.g. together with the digital 3D representation of the tooth. If the digital 3D representation also contains parts relating to

other teeth the tooth shade value for the tooth is preferably displayed at the tooth, such as at the point of the for which the tooth shade value has been determined.

The tooth shade value can also be represented as a color mapped onto the digital 3D representation.

When a dental restoration is designed based on the determined tooth shade value this can provide a visualization of how the restoration will appear together with neighboring teeth also contained in the digital 3D representation obtained by scanning the teeth.

In some embodiments, the method comprises deriving a certainty score expressing the certainty of the determined tooth shade value.

Deriving a certainty score for the determined tooth shade value provides the advantage that a measure of how accurate the determined value is can be displayed to the operator, preferably when the patient is still at the clinic such that further scanning can be performed if this is required to provide a more precise tooth shade value.

In some embodiments, the method comprises generating a visual representation of the certainty score and displaying this visual representation in a user interface.

In some embodiments, the method comprises generating a certainty score profile at least for a portion of the tooth, where the certainty scope profile represents the certainty scores for tooth shade values determined for a number of points on the tooth, such as for the values in a tooth shade profile for the tooth. The certainty score profile can be mapped onto the digital 3D representation of the tooth and visualized in a user interface. When the tooth shade profile also is mapped onto the tooth digital 3D representation the operator may be allowed to toggle between having the tooth shade profile and having the certainty scope profiled visualized on the digital 3D representation.

In some embodiments the visual representation of the certainty score is displayed together with or is mapped onto the digital 3D representation of the tooth.

In some embodiments, the method comprises comparing the derived certainty score with a range of acceptable certainty score values. This is done to verify that the certainty score is acceptable, i.e. that the determined tooth shade value is sufficiently reliable.

One boundary of the range can be defined by a threshold value. When a high certainty scope indicates that the determined shade value most likely is correct, the threshold value may define the lower boundary of the range and vice versa.

A visual representation of the certainty score or of the result of the comparison of the certainty score with the range can be generated and displayed in a user interface. Preferably, this visual representation is displayed together with the determined tooth shade value.

In some embodiments, the method comprises deciding based on the certainty score whether the determined tooth shade value or tooth shade profile is acceptable. This may be based on the comparison of the derived certainty score and the range of acceptable certainty score values, e.g. where it is decided that the determined tooth shade value is acceptable if the certainty score is within the range of acceptable values.

In some embodiments, the certainty measure relates to how uniform the sub-scan texture information is at the point.

If large variations are found in the texture information in the vicinity of the parts corresponding to the point for a substantial fraction of the sub-scans, the texture data

derived therefrom may be unreliable and the tooth shade value derived for this point is accordingly not very reliable.

In some embodiments, the certainty measure relates to how close the texture data is to the known texture value of the determined tooth shade value. In particular, the certainty measure may relate to how close one parameter of the color data of the digital 3D representation is to the corresponding parameter of the known color for the determined tooth shade value. For example, the certainty measure may relate to the difference in the lightness parameter between point of the digital 3D representation and the determined tooth shade value.

The Euclidian distance between the color data to the selected reference tooth shade value can also be used in determining the certainty measure. If the Euclidian distance is above a threshold value the uncertainty is then evaluated to be too large. The color data can here both relate to color data of the point or the average color data for a region surrounding the point.

In some embodiments, the certainty measure relates to the amount of texture information used to derive the texture data at the point.

When the texture data for the point is derived from a limited amount of texture information the texture data, and accordingly the tooth shade value derived therefrom, may be less reliable than the tooth shade values derived from large amounts of texture information.

In some embodiments, the visual representation of the certainty score comprises a binary code, such as red for certainty scores outside a range of acceptable certainty score values, and green for certainty scores within the range, a bar structure with a color gradient, a

numerical value, and/or a comparison between the texture data and the known texture value of the determined tooth shade value.

In some embodiments, the visual representation of the certainty score comprises a certainty score indicator.

The certainty score indicator may comprise a bar structure with a color gradient going from a first color representing a low certainty score to a second color representing a high certainty score. The first color may be red and the second color green. The color gradient of the bar structure may be configured to have an intermediate color, e.g. yellow representing the threshold value for the certainty score. The certainty score indicator may comprise marker which is arranged relative to the color gradient of the bar structure such that it indicated the certainty score.

In some embodiments, the visual representation of the certainty score comprises a numerical value, such as a numerical value in an interval extending from a lower limit indicating a low certainly, i.e. a relatively uncertain tooth shade value, to a higher limit indicating a high certainty, i.e. a relatively certain tooth shade value.

In some embodiments, the one or more reference tooth shade values relate to shade values for natural teeth with intact surface and/or to shade values for teeth prepared for a dental restoration.

The reference tooth shade values used for determining the tooth shade can be selected based on the tooth. Intact and healthy teeth normally have tooth shades in one range of tooth shade values where a tooth prepared for a dental restoration has a tooth shade in another range, which may overlap with the range for healthy teeth. It may thus be advantageous that the operator enters whether the tooth is intact or prepared for a

restoration and the appropriate color space is used in the comparison with the texture data.

If the color data in the point on the digital 3D representation of the tooth has a poor match to all the reference tooth shade values of the selected tooth shade system/guide the point may e.g. be on the gingiva of the patient or relate to silver filling.

In some embodiments, the method comprises comparing the texture data with known texture values for soft oral tissue, such as gum tissue and gingiva.

This may e.g. be relevant when the certainty scores are outside said range of acceptable certainty score values for all tooth shade values of a tooth shade system, i.e. if there is a poor match between the texture data and the known texture for all the tooth shades of the reference set.

In a user interface for implementing the method, it may be suggested to the operator that the point perhaps is not on a tooth surface but on the gums or gingiva of the patient. This suggestion may be provided both when the texture data has been found to give a good match with known texture values of gum/gingiva and/or when the texture data has a poor match with the known texture values of the reference tooth shade values in the tooth shade system or systems.

In some embodiments, the method comprises determining an alternative tooth shade value for the point when said certainty score is outside said range of acceptable certainty score values.

In some embodiments, the method comprises displaying the alternative tooth shade value in the user interface optionally together with the digital 3D representation of the patient's set of teeth and/or the initially determined tooth shade value

The digital 3D representation of the tooth is generated at least partly from the geometry information of the sub-scans. In some embodiments, the texture information of the sub-scans is also taken into account when generating the digital 3D representation of the tooth.

Sub-scans comprising texture information and geometry information may be recorded for more than said tooth, such that the generated digital 3D representation may comprise shade data expressing the shape and texture data expressing the texture profile of several of the patient's teeth.

Disclosed is a method for determining shade of a patient's tooth, wherein the method comprises:

- recording a series of sub-scans of the patient's set of teeth, where a plurality of said sub-scans comprises both texture information and geometry information for said tooth;
- generating a digital 3D representation of the tooth from said sub-scans, wherein the digital 3D representation comprises shape data expressing the shape of the tooth and texture data expressing a texture profile of the tooth; and
- determining a tooth shade value for a point on the tooth by comparing the texture data of the corresponding point of the digital 3D representation with a known texture value of one or more reference tooth shade values.

Disclosed is a user interface for determining and displaying shade of a patient's tooth, wherein the user interface is configured for:

- obtaining a digital 3D representation of the tooth, said digital 3D representation comprising shape data expressing the shape of the tooth and texture data expressing a texture profile of the tooth;
- displaying at least the shape data of the digital 3D representation such that the shape of the tooth is visualized in the user interface;

- determining a tooth shade value for a point on the tooth by comparing the texture data of the corresponding point of the digital 3D representation with a known texture value of one or more reference tooth shade values; and
- displaying the determined tooth shade value.

In some embodiments, the user interface is configured for deriving a certainty score expressing the certainty of the determined tooth shade value for said point.

In some embodiments, the user interface comprises a virtual tool which when activated on a point of the digital 3D representation of the tooth provides that

- the determined tooth shade value for the point; and/or
- a visual representation of a certainty score for the determined tooth shade value; and/or
- a visual representation of a comparison of the derived certainty score with a range of acceptable certainty score values

is visualized in the user interface.

The user interface can then provide the operator with an opportunity to decide based on the visualized certainty score and/or the visual representations whether the determined tooth shade value or tooth shade profile is acceptable.

In some embodiments, the visual representation of the comparison of the derived certainty score with the range of acceptable certainty score values comprises a binary code, such as red for certainty scores outside a range of acceptable certainty score values, and green for certainty scores within the range. Other means for this visualization are described above.

The visualized certainty score and/or the representation(s) of the certainty score or comparison of the certainty score with the range of acceptable certainty score values may

be displayed at the digital 3D representation in the user interface or in a shade value region of the user interface.

In some embodiments, the user interface is configured for determining an alternative shade value for the point and for displaying the alternative shade value when the certainty scores outside a range of acceptable certainty score values.

Disclosed is a method for designing a dental restoration for a patient, wherein the method comprises:

- obtaining a digital 3D representation of at least one tooth, said digital 3D representation comprising shape data expressing the shape of the tooth and texture data expressing a texture profile of the tooth;
- determining a tooth shade value for a point on the tooth by comparing the texture data of the corresponding point of the digital 3D representation with a known texture value of one or more reference tooth shade values; and
- creating a digital restoration design for one or more of the patient's teeth; and
- selecting a restoration shade of the digital restoration design based on said tooth shade value.

The digital restoration design can e.g. be for the manufacture of dental prosthetic restoration for the patient, such as a crown or a bridge restoration, where the digital restoration design expresses a desired shape and shade profile of the dental restoration. Such digital restoration designs can be in the form of a CAD model of the dental restoration.

In some embodiments, the method comprises suggesting a dental material for manufacturing the dental restoration from the digital restoration design based on the determined restoration shade.

In cases where the dental restoration is designed and manufactured for an existing tooth which has an acceptable shade, the tooth shade value or tooth shade profile can be determined for the existing tooth and the shade of the digital restoration design based on the tooth shade value or tooth shade profile of the existing tooth.

This may e.g. be advantageous for the crown portions of a bridge restoration in the case where the tooth which is intended to accept the crown portion of the bridge is a healthy tooth.

In some cases the dental restoration is designed and manufactured for a tooth which either is damaged or has an undesired shade profile, such as for a broken or dead tooth. In such cases it can be advantageous to determine the tooth shade value or tooth shade profile for one or more of the neighboring teeth and selecting the restoration shade of the digital restoration design from e.g. an interpolation of the tooth shade values/profiles of the neighboring teeth.

Disclosed is a method for designing a dental restoration for a first tooth, wherein the method comprises:

- obtaining a digital 3D representation of the patient's set of teeth, said digital 3D representation comprising shape data and texture data expressing the shape and texture profile, respectively, of at least one second tooth;
- designing a digital restoration design for the first tooth;
- deriving a desired texture profile of the digital restoration design from the texture data of the at least one second tooth; and
- determining a restoration shade value or restoration shade profile of the digital restoration design by comparing the desired texture profile with texture values for one or more reference tooth shade values.

In some embodiments, the desired texture profile is derived by interpolation or averaging of the texture data of the digital 3D representation of the neighbor teeth.

In some embodiments, one or more of the sub-scans comprise texture information for the patient's soft tissue, and optionally geometry information for said soft tissue. The generated digital 3D representation may then comprise shape data expressing the shape of the soft tissue and texture data expressing a texture profile of the soft tissue.

From this information, an aesthetical pleasing denture can be designed where the color of the soft tissue part of the denture is selected based on the texture profile of the corresponding part of the digital 3D representation.

Knowledge of the texture of the soft tissue, such as of the color of the soft tissue, can also be used for diagnostics. When the texture data of a point on the digital 3D representation corresponding to soft tissue does not provide a sufficiently good match with a known range of texture values for soft tissue, a warning may be prompted in a user interface to alert the operator that the soft tissue is suspicious.

Disclosed is a system for determining shade of a patient's tooth, wherein the system comprises:

- a scanner capable of recording a digital 3D representation of the tooth, where the digital 3D representation comprises shape data and texture data for the tooth; and
- a data processing system comprising a computer-readable medium having stored thereon the program code means for causing the data processing system to determine a tooth shade value for at least one point on the tooth based on the texture data of the corresponding point of the digital 3D representation and on known texture values of one or more reference tooth shade values using the method according to any of the embodiments.

In some embodiments, the sub-scans are recorded using an intra-oral scanner, such as the 3Shape TRIOS intra-oral scanner.

The intra-oral scanner may be configured for utilizing focus scanning, where the sub-scans of the scanned teeth are reconstructed from in-focus images acquired at different focus depths. The focus scanning technique can be performed by generating a probe light and transmitting this probe light towards the set of teeth such that at least a part of the set of teeth is illuminated. Light returning from the set of teeth is transmitted towards a camera and imaged onto an image sensor in the camera by means of an optical system, where the image sensor/camera comprises an array of sensor elements. The position of the focus plane on/relative to the set of teeth is varied by means of focusing optics while images are obtained from/by means of said array of sensor elements. Based on the images, the in-focus position(s) of each of a plurality of the sensor elements or each of a plurality of groups of the sensor elements may be determined for a sequence of focus plane positions.

The in-focus position can e.g. be calculated by determining the maximum of a correlation measure for each of a plurality of the sensor elements or each of a plurality of groups of the sensor elements for a range of focus planes as described in WO2010145669. From the in-focus positions, sub-scans of the set of teeth can be derived with geometry information relating to the shape of the scanned surface. When e.g. the image sensor is a color sensor and the light source provides a multispectral signal a plurality of the sub-scans can include both geometry information and texture information, such as color information, for said tooth.

A digital 3D representation of the set of teeth can then be generated from the recorded sub-scans by e.g. the use of an Iterative Closest Point (ICP) algorithm. Iterative Closest Point (ICP) is an algorithm employed to minimize the difference between two clouds of points. ICP can be used to reconstruct 2D or 3D surfaces from different scans or sub-scans. The algorithm is conceptually simple and is commonly used in real-time. It iteratively

revises the transformation, i.e. translation and rotation, needed to minimize the distance between the points of two raw scans or sub-scans. The inputs are: points from two raw scans or sub-scans, initial estimation of the transformation, criteria for stopping the iteration. The output is: refined transformation. Essentially the algorithm steps are:

1. Associate points by the nearest neighbor criteria.
2. Estimate transformation parameters using a mean square cost function.
3. Transform the points using the estimated parameters.
4. Iterate, i.e. re-associate the points and so on.

The generated digital 3D representation formed by such a procedure comprises shape data expressing the shape of the tooth. The texture information of the sub-scans can be used in various ways to provide that the generated digital 3D representation also comprises texture data expressing a texture profile of the tooth. For a number of the sub-scans, the part of the sub-scan relating to the same point on the tooth can be identified, e.g. during the ICP procedure. The corresponding texture information of these parts of the sub-scans can then be combined to provide the texture data for that point.

Furthermore, the invention relates to a computer program product comprising program code means for causing a data processing system to perform the method according to any of the embodiments, when said program code means are executed on the data processing system, and a computer program product, comprising a computer-readable medium having stored there on the program code means.

The present invention relates to different aspects including the method and user interface described above and in the following, and corresponding methods and user interface, each yielding one or more of the described advantage, and each having one or more embodiments corresponding to the embodiments described above and/or disclosed in the appended claims.

Brief Description of the Drawings

The above and/or additional objects, features and advantages of the present invention, will be further elucidated by the following illustrative and non-limiting detailed description of embodiments of the present invention, with reference to the appended drawings, wherein:

Figure 1 shows an example of a flow chart for an embodiment.

Figures 2 to 4 show parts of screen shots of user interfaces.

Figure 5 shows steps of a method for designing a dental restoration.

Figure 6 shows a schematic of a system for determining tooth shade values

Figures 7A-7D and 8A-8B show schematics of intra-oral scanning.

Figures 9A-9B illustrates one way of determining tooth shade values from texture data.

Detailed Description

In the following description, reference is made to the accompanying figures, which show by way of illustration how the invention may be practiced.

Figure 1 shows an example of a flow chart 100 for an embodiment of the method for determining shade of a patient's tooth.

In step 102 a series of sub-scans of the patient's set of teeth is recorded, where a plurality of said sub-scans comprises both texture information and shape information for the tooth.

In step 103 a digital 3D representation of the tooth is generated from said sub-scans, where the digital 3D representation comprises texture data expressing a texture profile of the tooth. The digital 3D representation further comprises shape data expressing the shape of the tooth such that the shape of the tooth can be visualized in a user interface.

In step 104 a tooth shade value for a point on the tooth is determined based on the texture data. This is done at least in part by comparing the texture data of the corresponding point of the digital 3D representation with a known texture value of one or more reference tooth shade values. The reference tooth shade values may be provided in the form of a library file and comprise tooth shade values and corresponding texture values based on e.g. the VITA 3D-Master and/or the VITA Classic tooth shade systems.

Figures 2 to 4 show parts of screen shots from user interfaces in which derived tooth shade values and visual representation of the corresponding certainty scores for a number of tooth regions are displayed at the digital 3D representations of the patient's set of teeth.

The point or points on the tooth for which the tooth shade value(s) is/are determined can be selected by an operator. This can be the case e.g. when the digital 3D representation of the tooth is visualized in a user interface and the operator uses a pointing tool, such as a computer mouse, to indicate where on the digital 3D representation of the tooth, he wishes to determine the tooth shade value. The point or points can also be selected by a computer implemented algorithm based on predetermined positions on the digital 3D representation of the tooth, such as a point arranged at a certain distance to the incisal edge of the tooth.

The screen shot 210 seen in Fig. 2 shows three regions 212, 213, 214 on the digital 3D representation of the patient's set of teeth. Two of these 212, 213, are selected at the part of the digital 3D representation corresponding to the tooth 211 while the third 214 is selected on the soft tissue part 215 of the digital 3D representation. Average tooth shade

value for a region can be calculated by averaging over tooth shade values derived for a number of points within the region or by calculating an average texture value for the region and determining the average tooth shade value therefrom. The average tooth shade values are displayed in tooth value sections 217, 218, 219 linked to the regions in the user interface. In the tooth value sections 217, 218 relating to the regions 212, 213 two tooth shade values are displayed where the upper shade value is derived using known texture values corresponding to the reference tooth shade values of the VITA 3D-Master tooth shade system and the lower tooth shade values relates to the VITA Classic tooth shade system. It is also seen that for the region 213 closest to the gingiva, the tooth shade is determined to be 2L1.5 in the VITA 3D-Master system and B1 in the VITA Classic system. In Fig. 2 the certainty scores for the derived tooth shade values are visualized as a certainty score indicator displayed next to the tooth shade values. In Fig. 2 the visualization of the certainty score indicator is in the form of a checkmark which indicates that the certainty score is sufficiently good to provide that the derived tooth shade values can be relied upon. The color of the checkmark may provide further information to the certainty score, such as in cases where a green checkmark indicates a more certain tooth shade value than a yellow checkmark. The third region 214 is located at the patient's soft tissue. An anatomical correct tooth shade value can hence not be calculated from the texture data of that part of the digital 3D representation of the patient's teeth and the corresponding certainty scope is accordingly very low. The visualization of the certainty score in the tooth value section 219 is hence a cross indicating that the derived shade value was rejected. Further no shade value is indicated in the tooth value section 219.

The screen shot 310 seen in Fig. 3 shows two regions 312, 314 on the digital 3D representation of the patient's set of teeth. One of these regions 312 is selected at the part of the digital 3D representation corresponding to the tooth 311 while the second region 314 is selected on the soft tissue part 315 of the digital 3D representation. Average tooth shade value for a region can be calculated as described above in relation to Fig. 2. Shade value sections 317, 319 are also displayed for the regions 312, 314. Two tooth shade values

321 are derived for the region 312 and displayed in the corresponding tooth value section 317, where the upper value is derived using known texture values corresponding to the reference tooth shade values of the VITA 3D-Master tooth shade system (derived tooth shade value is 1.5M1) and the lower value using the VITA Classic tooth shade system (derived tooth shade value is B1). In Fig. 3 the certainty score is visualized in the form of a certainty score indicator 322 comprising a vertical bar with a color gradient going from red representing a poor certainty score to green representing a good certainty score. The certainty score indicator has a marker indicating the certainty score on the bar. It is seen that the tooth shade value 1.5M1 of the VITA 3D-Master system is more certain than the tooth shade value B1 of the VITA Classic system for this region. The tooth shade value of 1.5M1 is found by interpolation of the reference tooth shades 1M1 and 2M2.

The second region 314 is located at the patient's soft tissue. An anatomical correct tooth shade value can hence not be calculated from the texture data of that part of the digital 3D representation of the patient's teeth and the corresponding certainty scope is accordingly very low as seen in the vertical bars of tooth value section 319.

Fig. 4 shows a screen shot 410 where determined tooth shade values are derived for a total of 15 regions on the digital 3D representation of the tooth 411. The tooth shade values are all derived based on the known texture values of the reference tooth shade values of the VITA 3D-Master tooth shade system. The certainty scores are visualized in the form of a certainty score indicator comprising a vertical bar with a color gradient going from red representing a poor certainty score to green representing a good certainty score. As can be seen in the tooth value sections 417, 418 of the user interface there are large variations in the certainty scores. For example, the certainty score for the region 412 is almost at maximum while the certainty score of the region 413 is much close to a threshold for acceptable certainty score values. When tooth shade values are determined for a number of points on the tooth, the points may be arranged in a grid over the part of the digital 3D representation of the tooth.

Fig. 5 shows steps of a method for designing a dental restoration.

In step 531 a digital restoration design is created e.g. based on the shape data of a digital 3D representation of the patient's set of teeth and/or on template digital restoration design loaded from a library. Template digital restoration designs may e.g. be used when the tooth is broken.

In step 532 the tooth shade values of different points or regions of the teeth are derived from the texture data of the digital 3D representation of the patient's set of teeth. From the derived tooth shade values or from tooth shade profiles created based on the derived tooth shade values a desired shade profile for the dental restoration can be determined. This can be based on e.g. feature extraction where shade values are extracted from the other teeth by e.g. identifying shade zones on these teeth and copying these zones to the dental restoration. It can also be based on established shade rules for teeth, e.g. a rule describing a relation between the tooth shades values or profiles of the canines and the anterior teeth.

In step 533 the desired tooth shade value(s) for the dental restoration is merged into the digital restoration design.

When the dental restoration is to be drilled from a multicolored milling block it is important that the dental restoration is milled from the correct parts of the milling block. In step 534 a CAD model of the milling block is provided, where the CAD model comprises information of the shade profile of the milling block material. The optimal position of the digital restoration design relative to the CAD model of the milling block is then determined in 535, where different criteria can be apply to provide the best fit between the desired shade profile and what actually can be obtained as dictated by the shade profile of the milling block.

In step 536 the dental restoration is manufactured from the milling block by removing milling block material until the dental restoration is shaped according to the digital restoration design.

Fig. 6 shows a schematic of a system for determining tooth shade values. The system 640 comprises a computer device 642 comprising a computer readable medium 643 and a processor 644. The system further comprises a visual display unit 647, a computer keyboard 645 and a computer mouse 646 for entering data and activating virtual buttons in a user interface visualized on the visual display unit 647. The visual display unit can be a computer screen. The computer device 642 is capable of receiving a digital 3D representation of the patient's set of teeth from a scanning device 641, such as the TRIOS intra-oral color scanner manufactured by 3shape A/S, or capable of receiving scan data from such a scanning device and forming a digital 3D representation of the patient's set of teeth based on such scan data. The obtained digital 3D representation can be stored in the computer readable medium 643 and provided to the processor 644. The processor is configured for implementing the method according to any of the embodiments. This may involve presenting one or more options to the operator, such as where to derive the tooth shade value and whether to accept a derived tooth shade value. The options can be presented in the user interface visualized on the visual display unit 647.

Many scanning devices have Bayer color filters with Red, Green and Blue filters and hence record color information in the RGB color space. For instance a focus scanner can record series of 2D color images for the generation of sub-scans, where the color information is provided in the RGB color space. The processor 644 then comprises algorithms for transforming the recorded color data into e.g. the L*a*b or L*C*h color spaces.

The system may further comprise a unit 648 for transmitting a digital restoration design and a CAD model of a milling block to e.g. a computer aided manufacturing (CAM) device

649 for manufacturing a shaded dental restoration or to another computer system e.g. located at a milling center where the dental restoration is manufactured. The unit for transmitting the digital restoration design can be a wired or a wireless connection.

The scanning of the patient's set of teeth using the scanning device 641 can be performed at a dentist while deriving the tooth shade values can be performed at a dental laboratory. In such cases the digital 3D representation of the patient's set of teeth can be provided via an internet connection between the dentist and the dental laboratory.

Figures 7A-7D and 8A-8B show schematics of intra-oral scanning.

Different scanner configurations can be used to acquire sub-scans comprising both shape and texture information. In some scanner designs the scanner is mounted on axes with encoders which provides that the sub-scans acquired from different orientations can be combined using position and orientation readings from the encoders. When the scanner operates by the focus-scanning technique the individual sub-scans of the tooth are derived from a sequence of 2D images obtained while scanning a focus plane over a portion of the tooth. The focus scanning technique is described in detail in WO2010145669. The shape information of the sub-scans for an object, such as a tooth, can be combined by algorithms for stitching and registration as widely known in the literature. Texture data relating to the tooth color can be obtained using a scanner having a multi-chromatic light source, e.g. a white light source and a color image sensor. Color information from multiple sub-scans can be interpolated and averaged by methods such as texture weaving, or by simply averaging corresponding color components of the sub-scans corresponding to the same point/location on the surface. Texture weaving is described by e.g. Callieri M, Cignoni P, Scopigno R. "Reconstructing textured meshes from multiple range rgb maps". VMV 2002, Erlangen, Nov 20-22, 2002.

In Fig. 7A the scanner 741 (here represented by a cross-sectional view of the scanner tip) is held in one position relative to the teeth 711, 760 (also represented by a cross-sectional view) while recording a sequence of 2D images for one sub-scan. The illustrated teeth can e.g. be the anterior teeth in the lower jaw. The size of the Field of View (here represented by the full line 761 on the teeth) of the scanner is determined by the light source, the optical components and the image sensor of the scanner. In the illustrated example, the Field of View 761 covers part of the surface of the tooth 711 and part of the surface of the neighbor tooth 760. The generated digital 3D representation can thus also contain data for the neighbor teeth. This is often advantageous, e.g. when the generated digital 3D representation is used for creating a digital restoration design for the manufacture of a dental restoration for the tooth. In the Figure, the scanner is arranged such that the acquired sub-scan comprises shape and color information for the incisal edge 762 of the teeth. The probe light rays 763 from the scanner corresponding to the perimeter of the Field of View are also shown in the Figure. These probe light rays 763 define the optical path 764 of the scanner probe light at the tooth 711.

A digital 3D representation of the tooth can be generated by combining sub-scans acquired from different orientations relative to the teeth, e.g. by sub-scan registration. Sub-scans acquired from three such different orientations are illustrated in Figs. 7B, 7C and 7D, where only the optical path 763 of the scanner probe light is used to represent the relative scanner/tooth orientation in Figs. 7C and 7D. The sub-scans (here represented by the full line 765 on the teeth) covers different but overlapping sections of the tooth surface such that the sub-scans can be combined by registration into a common coordinate system using e.g. an Iterative Closest Point (ICP) algorithm as described above. A segment of each of the sub-scans corresponds to the point P on the tooth surface. When the sub-scans are registered to generate a digital 3D representation of the tooth, a correlation between these segments is established and the texture information of these sub-scan segments can be combined to determine the texture data for point P on the generated digital 3D representation of the tooth.

One way of doing this is to calculate the average value for each of the parameters used to describe the texture. For example, when the L*a*b* color system is used to describe the color information provided in each sub-scan, the color data of the digital 3D representation can be derived by averaging over each of the L^*, a^*, and b^* parameters of the sub-scans. For example, the L^* parameter of the color data for a given point P is then given by $L^*(P) = \frac{1}{N}\sum_i^N L_i^*(P)$ where N is the number of sub-scans used in deriving the texture data and $L_i^*(P)$ is the L^* parameter of the *i'th* sub-scan for the segment relating to P. Equivalent expressions are true for the a^* and b^* parameters for point P. The color parameters for each point on the digital 3D representation of the tooth can be determined for sections of or the entire surface of the tooth, such that the generated digital 3D representation comprises both shape and texture information about the tooth. The spatial resolution of the color data does not necessarily have to be identical to the resolution of the shape data of the digital 3D representation. The point P can be described e.g. in Cartesian, cylindrical or polar coordinates.

When the color data is derived for a point on the tooth, the tooth shade value for that point can be determined by comparing the derived color data with the known color data of the reference tooth shade values of a tooth shade guide such as the VITA 3D-Master.

Fig. 8A-8B illustrates some potentially problematic tooth surface areas for particular arrangements of the scanner 841 relative to the tooth 811.

Fig. 8A shows two points P_i and P_{ii} on the tooth 811 where the tooth surface is either substantially perpendicular or parallel to the optical path, such that the texture information recorded at P_i and P_{ii} may be unreliable. This is because the tooth surface at P_i is perpendicular to the optical path 864i at point P_i which introduces the risk of having specular reflections of the probe light. The optical path 864ii at point P_{ii} is parallel to the tooth surface at P_{ii} such that the signal recorded from this part of the tooth surface in this

sub-scan is relatively weak. This may cause that the color information in this section of the sub-scan are unreliable.

In order to obtain more precise color data the averaging of the color information described above in relation to Fig. 7 can be a weighted averaging where the color information of unreliable sub-scans segments are assigned a lower weight than others.

In Fig. 8B is indicated three different optical paths 864i, 864ii and 864iii at which sub-scans are acquired. When combining the color information for point P the color information of the segments of the sub-scans recorded with optical paths 864i and 864ii should be given a lower weight that the color information of the segment of the sub-scan recorded with the optical path 864iii.

This can be expressed by a modification of the equation given above. For a weighted averaging of the color information, the L^* parameter of the color data for a given point P is given by $L^*(P) = \sum_i^N \{\alpha_i(P) \cdot L_i^*(P)\} / \sum_i^N \alpha_i$ where $\alpha_i(P)$ is the weight factor for the color information of the *i'th* sub-scan in the segment at P. When a given sub-scan (e.g. the *j'th* sub-scan) is recorded at an angle relative to the tooth surface which causes the optical path to be e.g. perpendicular to the tooth surface at P, the corresponding weight factor $\alpha_i(P)$ is given a lower value than the color data of sub-scans acquired with an oblique angle between the optical path and the tooth surface.

Equivalent equations are true for the a^* and b^* parameters of the color data for point P.

Fig. 9A=9B illustrates how a tooth shade value for a point P on a tooth can be determined based on reference tooth shade values.

For a given point P on the digital 3D representation, the color data (L_P^*, a_P^*, b_P^*) has been determined, e.g. by combining the color information of a series of sub-scans used for

generating the digital 3D representation. If the color information originally is recorded using the RGB color space it is transformed into the L*a*b* color space using algorithms known to the skilled person.

In the example illustrated by Fig. 9A, the color data of the digital 3D representation and the known color values of the reference tooth shades are expressed in the L*a*b* color space, and the reference tooth shades are those from the VITA classical shade guide.

The reference shade values of the Vita classical shade guide are: B1, A1, B2, D2, A2, C1, C2, D4, A3, D3, B3, A3.5, B4, C3, A4, and C4. The color data of these reference shades can be provided by scanning the corresponding pre-manufactured teeth of the shade guide. These color data are then also initially obtained in the RGB color space and can be converted to the L*a*b color space using the same algorithms applied to the color information/data for the point P.

The tooth shade value for the point is determined as the reference tooth shade value which has the smallest Euclidian distance to the point in the L*a*b color space. The Euclidian distance ΔE_{P-Ri} from the color (L_P^*, a_P^*, b_P^*) to the known colors of the reference tooth shade values are calculated using the expression:

$$\Delta E_{P-Ri} = \sqrt[2]{(L_P^* - L_{Ri}^*)^2 + (a_P^* - a_{Ri}^*)^2 + (b_P^* - b_{Ri}^*)^2}$$

where *Ri* refers to the *i*'th reference tooth shade.

In Fig. 9A only the known colors $(L_{R1}^*, a_{R1}^*, b_{R1}^*)$ and $(L_{R2}^*, a_{R2}^*, b_{R2}^*)$ for the two closest reference values R1 and R2, respectively, are illustrated for simplicity. It can be seen that the Euclidian distance in the color space from P to R2 is the smallest, and the tooth shade in point P is hence selected as that of R2.

The certainty score for the tooth shade value determined for point P depends on how close the color data of the point P is to the known color value of the selected reference tooth

shade value. This can be quantified by the Euclidian distance and since point P is not particularly close to R2 in Fig. 9A the determined tooth shade has a poor certainty value.

An alternative approach to using the Euclidian distance is to determine individual parameters of the tooth shade value one at a time. This approach can be used e.g. when the reference tooth shades values are those of the Vita 3D-master system.

The reference tooth shade values of the Vita 3D-master shade guide are expressed in codes consisting of the three parameters Lightness-hue-Chroma, where Lightness is given in values between 1 and 5, the Chroma in values between 1 and 3, and the hue as one of "L", "M", or "R". A shade code in the Vita 3D-master can e.g. be 2M1, where the Lightness parameter equals 2, the Chroma 1 and the hue "M".

The known color data of the VITA 3D-master shade guide reference shades can be provided by scanning the pre-manufactured teeth of the shade guide. These color data are then also initially obtained in the RGB color space and can be converted to the L*a*b color space using the same algorithms applied to the color information/data for the point P. The known color data of each reference shade guide (having a code expressed in terms of Lightness, hue and Chroma) is then provided in terms of the L*a*b color space.

Since the lightness L has the largest impact on the human perception of the tooth color, the value of the Lightness-parameter L_P^* in the point is determined first. The value of L_P^* is compared with the values of the L^* parameters for the reference tooth shades. If L_P^* is close to the L^*-value for the i'th reference tooth shade value, L_{Ri}^* the L^* parameter for point P may be set equal to L_{Ri}^*.

In some cases the Lightness parameter is not close to any of the references but instead is located almost in the middle between two L^*-values. For example when L_P^* in the point is between the values of L_{Ri}^* = 2 and L_{Ri+1}^* = 3 with almost equal distance to each of these as

illustrated in Fig. 9B. Since the L*a*b color space is a linear space, the individual parameters of the shade values can be interpolated such that the Lightness for point P, L_P^*, can be set to 2.5.

The same procedure is performed for first the Chroma parameter and finally for the hue such that the three parameter of the tooth shade value are determined.

Although some embodiments have been described and shown in detail, the invention is not restricted to them, but may also be embodied in other ways within the scope of the subject matter defined in the following claims. In particular, it is to be understood that other embodiments may be utilized and structural and functional modifications may be made without departing from the scope of the present invention.

In device claims enumerating several means, several of these means can be embodied by one and the same item of hardware. The mere fact that certain measures are recited in mutually different dependent claims or described in different embodiments does not indicate that a combination of these measures cannot be used to advantage.

A claim may refer to any of the preceding claims, and “any” is understood to mean “any one or more” of the preceding claims.

It should be emphasized that the term "comprises/comprising" when used in this specification is taken to specify the presence of stated features, integers, steps or components but does not preclude the presence or addition of one or more other features, integers, steps, components or groups thereof.

The features of the method described above and in the following may be implemented in software and carried out on a data processing system or other processing means caused by the execution of computer-executable instructions. The instructions may be program code

means loaded in a memory, such as a RAM, from a storage medium or from another computer via a computer network. Alternatively, the described features may be implemented by hardwired circuitry instead of software or in combination with software.

References

Hassel 2012: Hassel et al. "Determination of VITA Classical shades with the 3D-Master shade guide" Acta Odontol Scand. 2013;71(3-4): 721-6.

Dozic 2007: Dozic et al. "Performance of five commercially available tooth color-measuring devices", J Prosthodont. 2007; 16(2):93-100.

Embodiments

1. A method for determining shade of a patient's tooth, wherein the method comprises:
   - obtaining a digital 3D representation of the tooth, where the digital 3D representation comprises shape data and texture data for the tooth; and
   - determining a tooth shade value for at least one point on the tooth based on the texture data of the corresponding point of the digital 3D representation and on known texture values of one or more reference tooth shade values.

2. The method according to embodiment 1, wherein determining the tooth shade value for the point comprises selecting the reference tooth shade value with the known texture value closest to the texture data of the point.

3. The method according to embodiment 1 or 2, wherein determining the tooth shade value for the point comprises an interpolation of the two or more reference tooth shade values having known texture values close to the texture data of the point.

4. The method according to any one of the preceding embodiments, wherein the method comprises deriving a certainty score expressing the certainty of the determined tooth shade value.

5. The method according to embodiment 4, wherein the method comprises generating a visual representation of the certainty score and displaying this visual representation in a user interface.

6. The method according to embodiment 5, wherein the visual representation of the certainty score is displayed together with or is mapped onto the digital 3D representation of the tooth.

7. The method according to any one of embodiments 4 to 6, wherein the method comprises comparing the derived certainty score with a range of acceptable certainty score values.

8. The method according to any one of embodiments 4 to 7, wherein the certainty measure relates to how uniform the sub-scan texture information is at the point, and/or to how close the texture data is to the known texture value of the determined tooth shade value, and/or to the amount of texture information used to derive the texture data at the point.

9. The method according to any one of embodiments 4 to 8, wherein the visual representation of the certainty score comprises a binary code, a bar structure with a color gradient, a numerical value, and/or a comparison between the texture data and the known texture value of the determined tooth shade value.

10. The method according to any one of the preceding embodiments, wherein the one or more reference tooth shade values relate to shade values for natural teeth with intact surface and/or to shade values for teeth prepared for a dental restoration.

11. The method according to any one of the preceding embodiments, wherein the method comprises comparing the texture data with known texture values for soft oral tissue, such as gum tissue and gingiva.

12. The method according to any of the previous embodiments, wherein the texture information comprises at least one of tooth color or surface roughness.

13. The method according to any one of the preceding embodiments, wherein the method comprises creating a shade profile for the tooth from shade values determined one or more points on the tooth.

14. The method according to embodiment 13, wherein the tooth shade profile comprises a one or more tooth shade regions on the tooth surface where an average tooth shade is derived for each region from tooth shade values determined for a number of points within the region

15. The method according to any of the previous embodiments, wherein obtaining the digital 3D representation of the tooth comprises recording a series of sub-scans of the tooth, where at least one of said sub-scans comprises both texture information and geometry information for said tooth, and generating the digital 3D representation of the tooth from the recorded series of sub-scans.

16. The method according to embodiment 15, wherein the texture data at least partly are derived by combining the texture information from corresponding parts of a number of the sub-scans.

17. The method according to embodiment 16, wherein combining the texture information from the sub-scans comprises interpolating the texture information and/or calculating an average value of the texture information.

18. The method according to embodiment 17, wherein the calculated average value is a weighted average of the texture information.

19. A user interface for determining and displaying shade of a patient's tooth, wherein the user interface is configured for:
    - obtaining a digital 3D representation of the tooth, said digital 3D representation comprising shape data and texture data for the tooth;
    - displaying at least the shape data of the digital 3D representation such that the shape of the tooth is visualized in the user interface;
    - determining a tooth shade value for at least one point on the tooth based on the texture data of the corresponding point of the digital 3D representation and on known texture values of one or more reference tooth shade values; and

displaying the determined tooth shade value.

Claims:

1. A method for determining shade of a patient's tooth, wherein the method comprises:
   - obtaining a digital 3D representation of the tooth, where the digital 3D representation comprises shape data and texture data for the tooth; and
   - determining a tooth shade value for at least one point on the tooth based on the texture data of the corresponding point of the digital 3D representation and on known texture values of one or more reference tooth shade values.

2. The method according to claim 1, wherein determining the tooth shade value for the point comprises selecting the reference tooth shade value with the known texture value closest to the texture data of the point.

3. The method according to claim 1, wherein determining the tooth shade value for the point comprises an interpolation of the two or more reference tooth shade values having known texture values close to the texture data of the point.

4. The method according to claim 1, wherein the method comprises deriving a certainty score expressing the certainty of the determined tooth shade value.

5. The method according to claim 4, wherein the method comprises generating a visual representation of the certainty score and displaying this visual representation in a user interface.

6. The method according to claim 5, wherein the visual representation of the certainty score is displayed together with or is mapped onto the digital 3D representation of the tooth.

7. The method according to claim 4, wherein the method comprises comparing the derived certainty score with a range of acceptable certainty score values.

8. The method according to claim 4, wherein the certainty measure relates to how uniform the sub-scan texture information is at the point, and/or to how close the texture data is to the known texture value of the determined tooth shade value, and/or to the amount of texture information used to derive the texture data at the point.

9. The method according to claim 4, wherein the visual representation of the certainty score comprises a binary code, a bar structure with a color gradient, a numerical value, and/or a comparison between the texture data and the known texture value of the determined tooth shade value.

10. The method according to claim 1, wherein the one or more reference tooth shade values relate to shade values for natural teeth with intact surface and/or to shade values for teeth prepared for a dental restoration.

11. The method according to claim 1s, wherein the method comprises comparing the texture data with known texture values for soft oral tissue, such as gum tissue and gingiva.

12. The method according to claim 1, wherein the texture information comprises at least one of tooth color or surface roughness.

13. The method according to claim 1, wherein the method comprises creating a shade profile for the tooth from shade values determined one or more points on the tooth.

14. The method according to claim 13, wherein the tooth shade profile comprises a one or more tooth shade regions on the tooth surface where an average tooth shade is derived

for each region from tooth shade values determined for a number of points within the region

15. The method according to claim 1, wherein obtaining the digital 3D representation of the tooth comprises recording a series of sub-scans of the tooth, where at least one of said sub-scans comprises both texture information and geometry information for said tooth, and generating the digital 3D representation of the tooth from the recorded series of sub-scans.

16. The method according to claim 15, wherein the texture data at least partly are derived by combining the texture information from corresponding parts of a number of the sub-scans.

17. The method according to claim 16, wherein combining the texture information from the sub-scans comprises interpolating the texture information and/or calculating an average value of the texture information.

18. The method according to claim 17, wherein the calculated average value is a weighted average of the texture information.

Abstract

Disclosed in a method, a user interface and a system for use in determining shade of a patient's tooth, wherein a digital 3D representation including shape data and texture data for the tooth is obtained. A tooth shade value for at least one point on the tooth is determined based on the texture data of the corresponding point of the digital 3D representation and on known texture values of one or more reference tooth shade values.

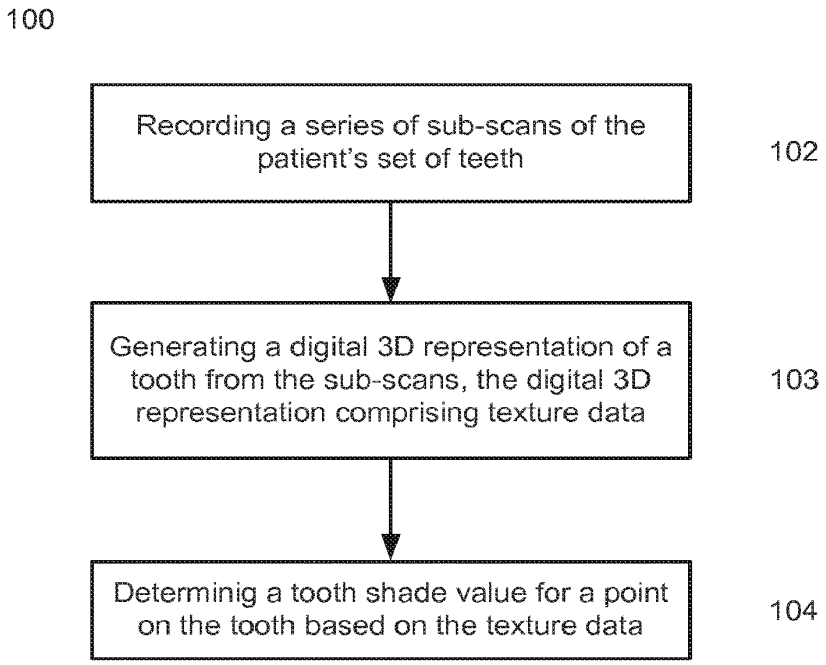
100
Recording a series of sub-scans of the patient's set of teeth
102
Generating a digital 3D representation of a tooth from the sub-scans, the digital 3D representation comprising texture data
103
Determinig a tooth shade value for a point on the tooth based on the texture data
104

Fig. 1

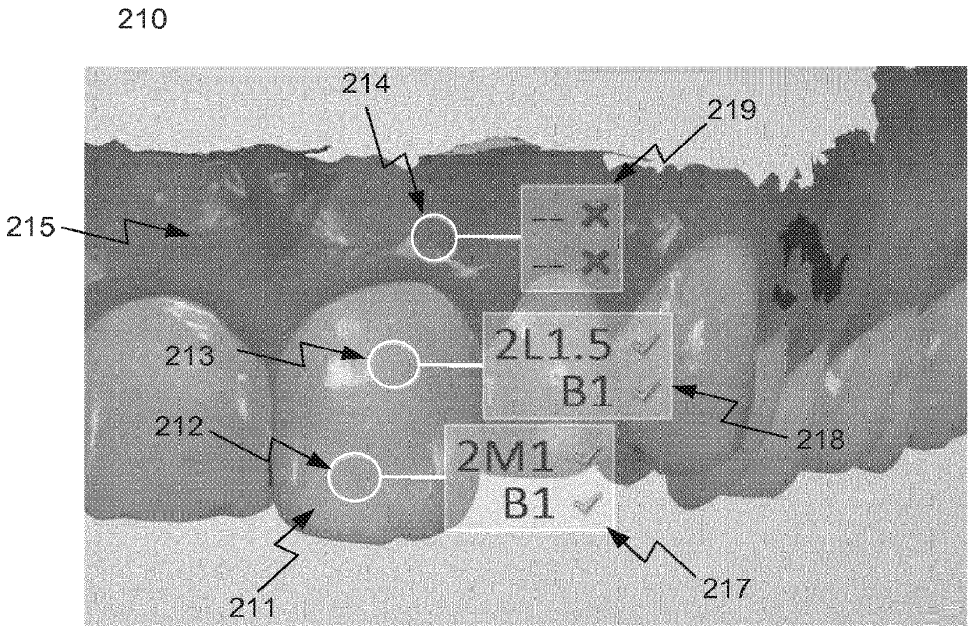
210
214
219
215
213
2L1.5
B1
218
212
2M1
B1
211
217

Fig. 2

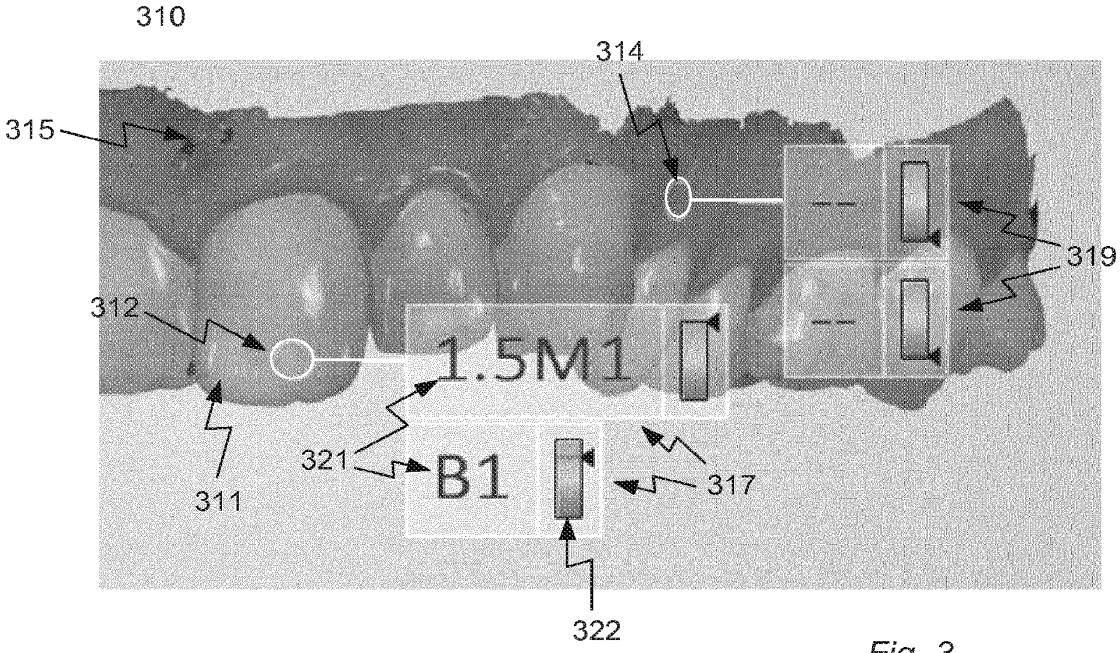
310
314
315
319
312
1.5M1
321
B1
317
311
322

Fig. 3

410

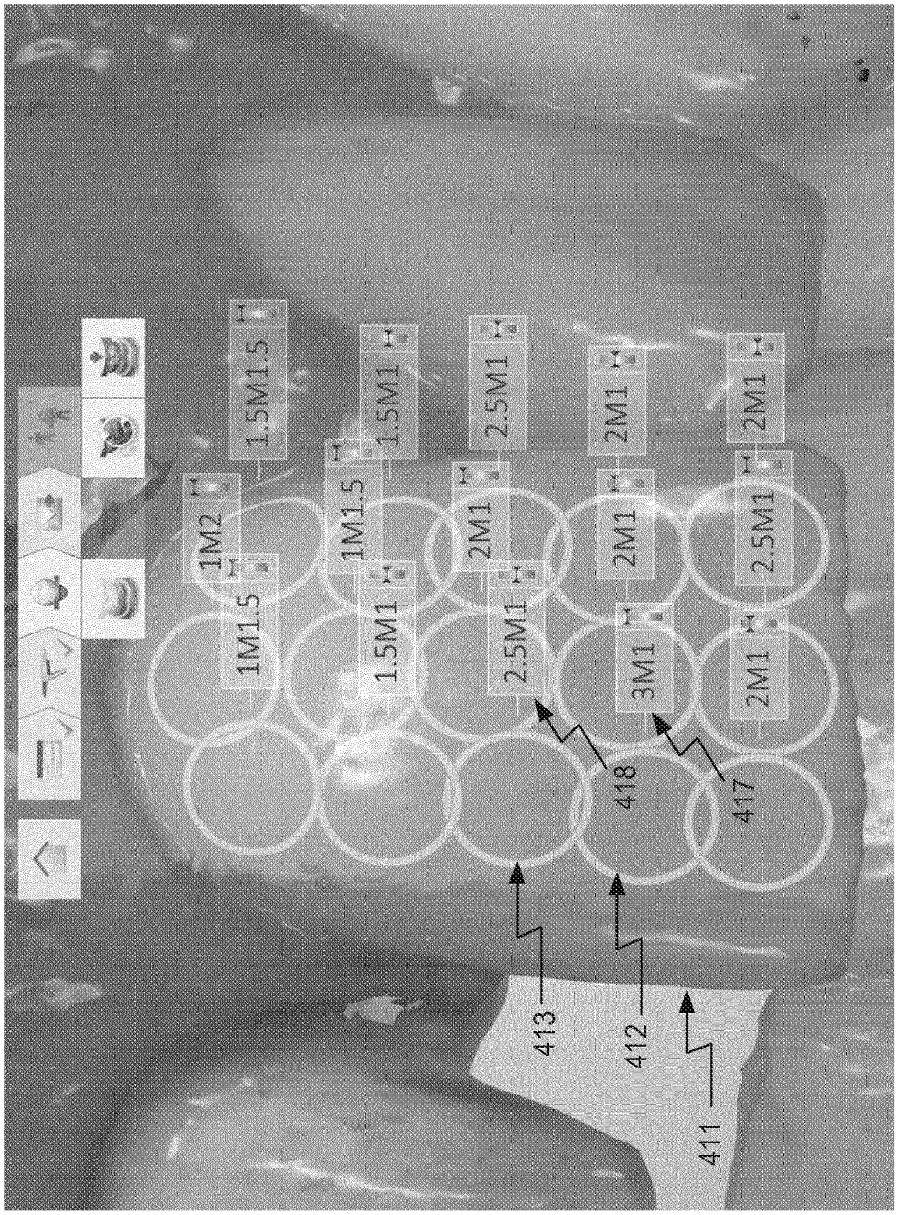
1M1.5
1M2
1.5M1.5
1.5M1
1M1.5
1.5M1
2M1
2.5M1
2.5M1
2M1
2M1
3M1
2M1
2.5M1
2M1
413
412
411
418
417

Fig. 4

Fig. 5

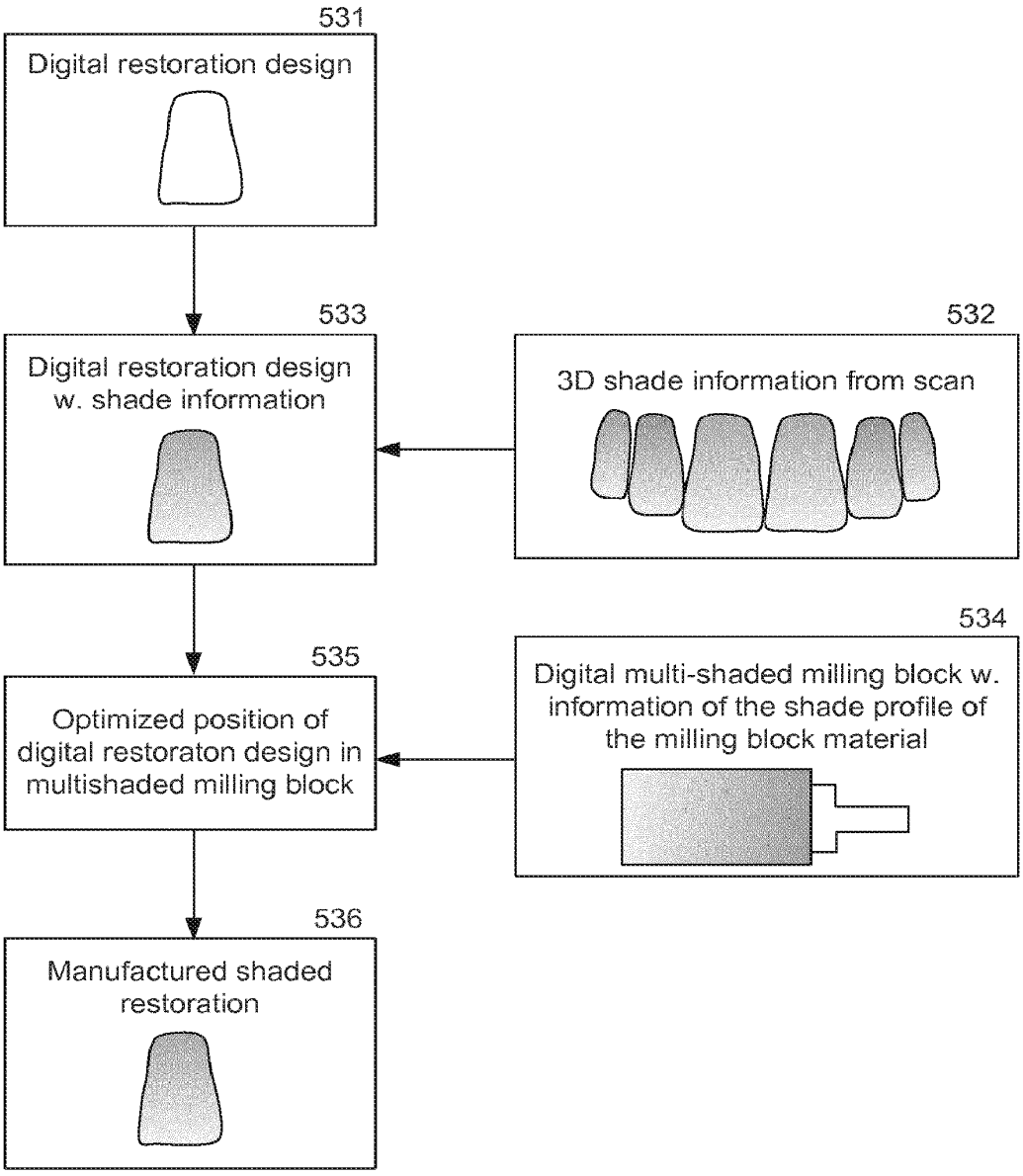
531
Digital restoration design
533
Digital restoration design w. shade information
532
3D shade information from scan
534
Digital multi-shaded milling block w. information of the shade profile of the milling block material
535
Optimized position of digital restoraton design in multishaded milling block
536
Manufactured shaded restoration

Fig. 6

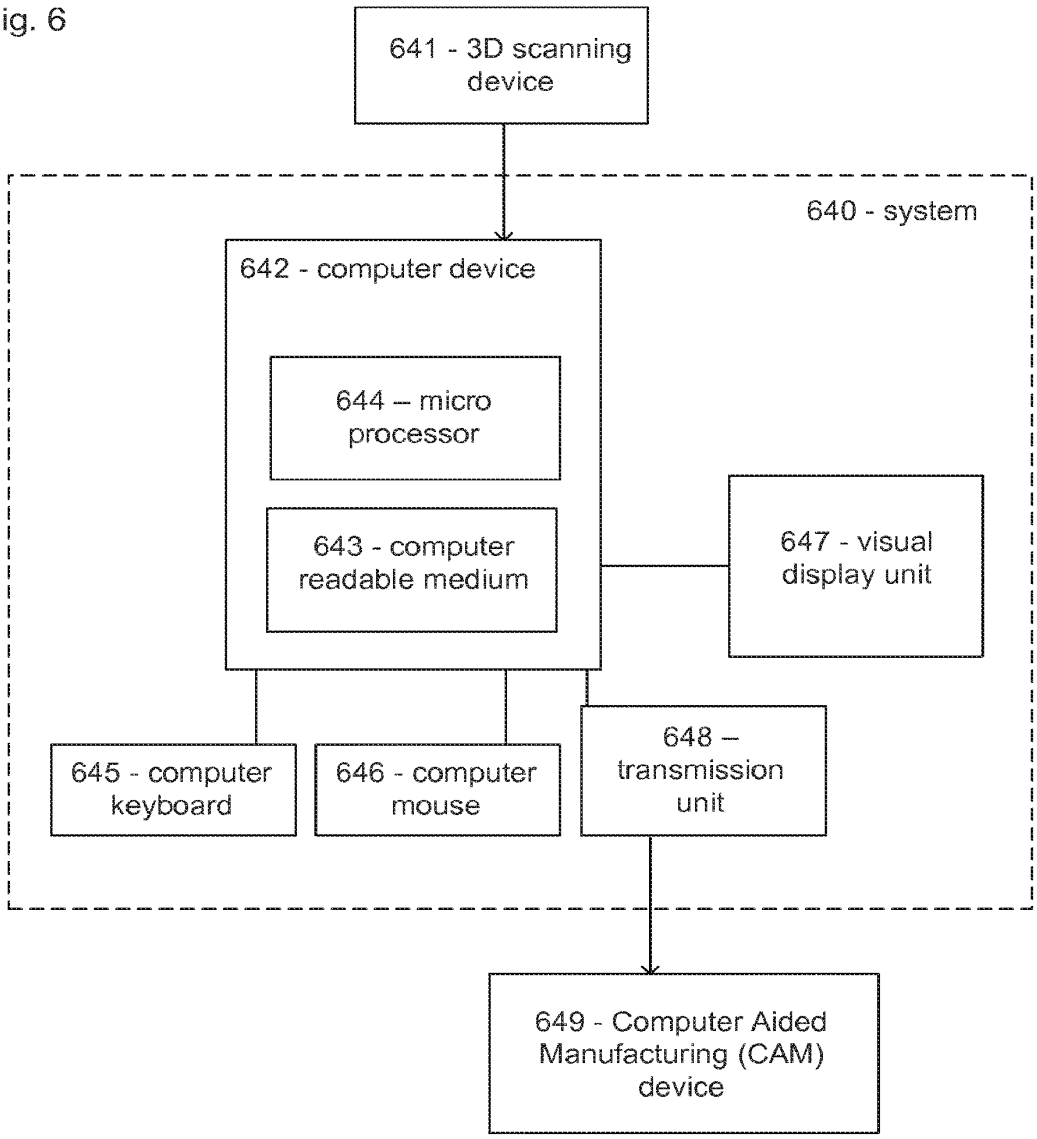
641 - 3D scanning device
640 - system
642 - computer device
644 – micro processor
643 - computer readable medium
647 - visual display unit
645 - computer keyboard
646 - computer mouse
648 – transmission unit
649 - Computer Aided Manufacturing (CAM) device

Fig. 7A

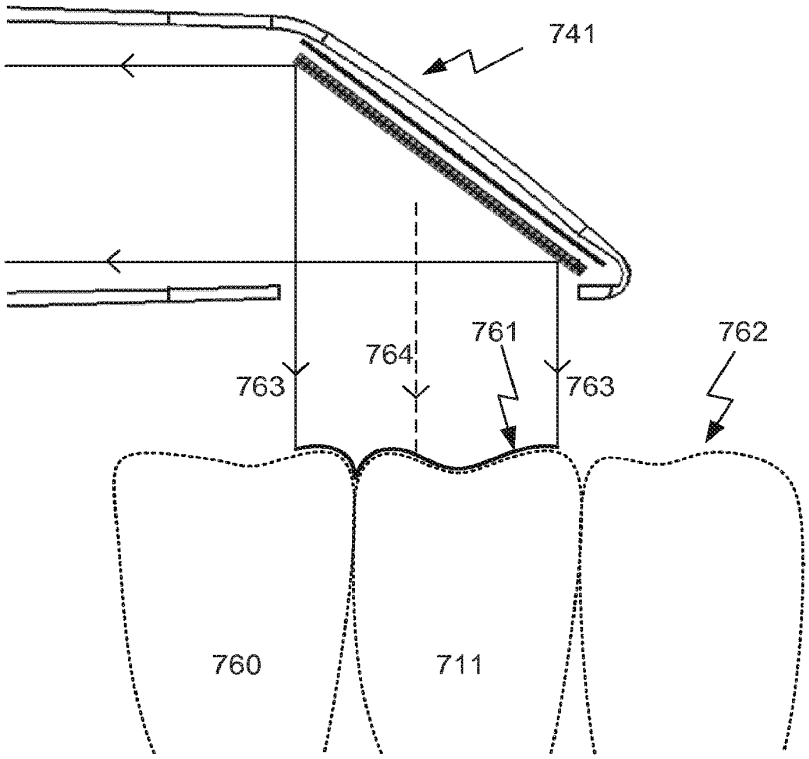

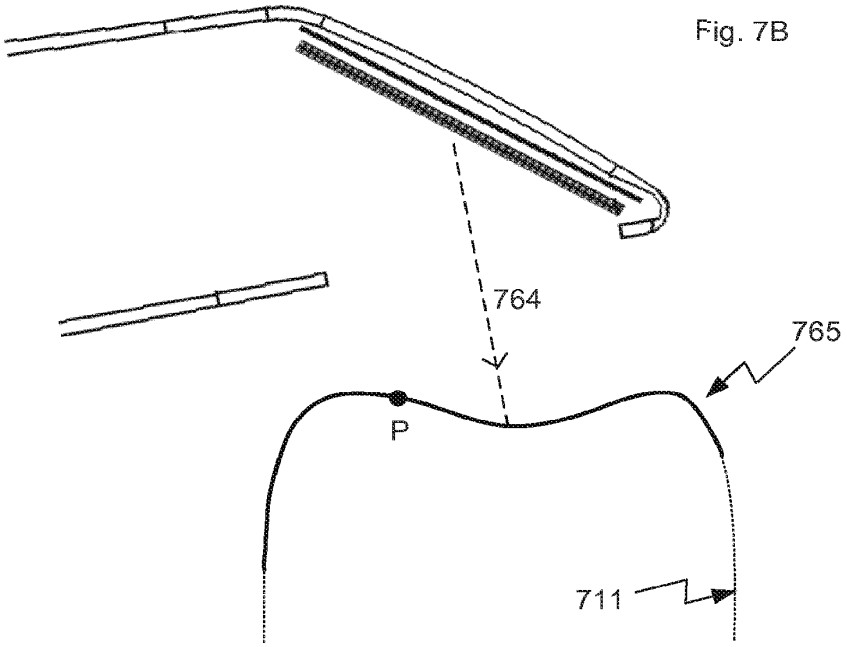

Fig. 7B

Fig. 7C

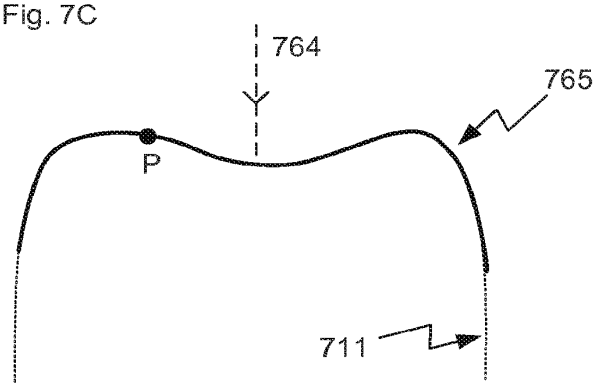

Fig. 7D

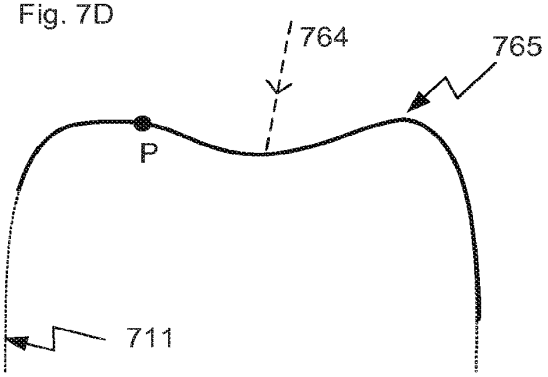

Fig. 8A

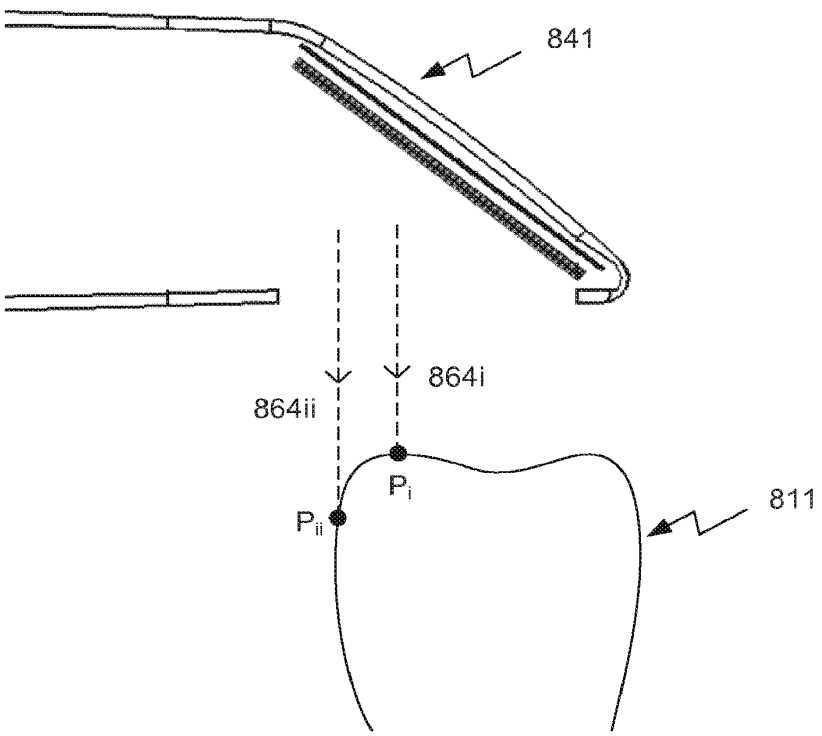

Fig. 8B

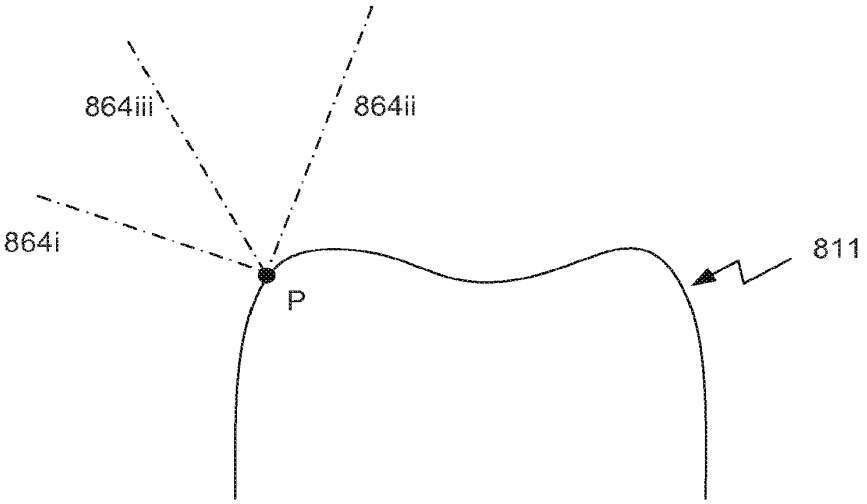

Fig. 9A

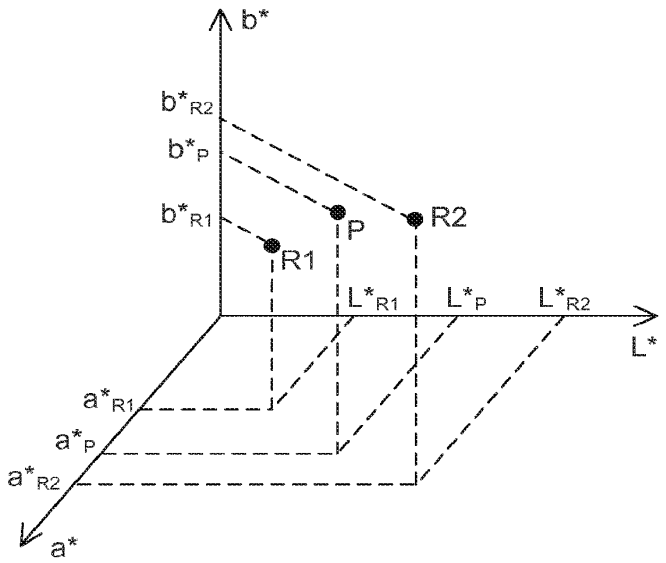

Fig. 9B

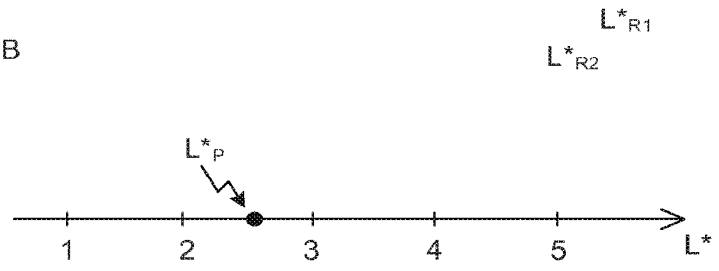

Attorney Docket No. 0079124-000162

IN THE UNITED STATES PATENT AND TRADEMARK OFFICE

In re Patent Application of	)	
	)	
Bo ESBECH	)	Group Art Unit: Unassigned
	)	
Application No.: Unassigned	)	Confirmation No.:
	)	
Filed: On Even Date Herewith	)	
	)	
For: DETECTING TOOTH SHADE	)	
	)	

FIRST INFORMATION DISCLOSURE STATEMENT

Commissioner for Patents
P.O. Box 1450
Alexandria, VA 22313-1450

Commissioner:

In accordance with the duty of disclosure as set forth in 37 C.F.R. § 1.56, the accompanying information is being submitted in accordance with 37 C.F.R. §§ 1.97 and 1.98.

All of the documents cited on the accompanying citation form were previously made of record in prior application Serial No. 15/117,078 filed on August 6, 2016, upon which Applicants rely for the benefits provided in 35 U.S.C. § 120. In accordance with 37 C.F.R. § 1.98, a copy of each of the listed documents, except those documents which were previously made of record in the prior application, is enclosed.

To assist the Examiner, the documents are listed on the attached citation form. It is respectfully requested that an Examiner initialed copy of this form be returned to the undersigned.

Respectfully submitted,

BUCHANAN INGERSOLL & ROONEY PC

Date: 5 February 2018

By: /Travis D. Boone/
Travis D. Boone
Registration No. 52635

Customer Number 21839
703 836 6620

Buchanan Ingersoll & Rooney PC
Attorneys & Government Relations Professionals

Substitute for PTO/SB/08a&b (07-09)
Approved for use through 07/31/2012. OMB 0651-0031
U.S. Patent and Trademark Office; U.S. DEPARTMENT OF COMMERCE
Under the Paperwork Reduction Act of 1995, no persons are required to respond to a collection of information unless it contains a valid OMB control number.

Substitute for form 1449/PTO				Complete if Known	
INFORMATION DISCLOSURE STATEMENT BY APPLICANT				*Application Number*	Unassigned
				Filing Date	On Even Date Herewith
				First Named Inventor	Bo ESBECH
(Use as many sheets as necessary)				*Art Unit*	Unassigned
				Examiner Name	Unassigned
Sheet	1	of	1	*Attorney Docket Number*	0079124-000162

U.S. PATENT DOCUMENTS

Examiner Initials'	Cite No.[1]	Document Number Number-Kind Code[2] *(if known)*	Publication Date MM-DD-YYYY	Name of Patentee or Applicant of Cited Document	Pages, Columns, Lines, Where Relevant Passages or Relevant Figures Appear
		US-2001/0030748 A1	10-18-2001	Jung et al.	
		US-2006/0127852 A1	06-15-2006	Wen	
		US-2007/0212667 A1	09-13-2007	Jung et al.	
		US-2009/0133260 A1	05-28-2009	Durbin et al.	
		US-2009/0233253 A1	09-17-2009	Mrazek	
		US-2011/0125304 A1	05-26-2011	Schneider et al. (corr. to EP 2325771 below)	
		US-2016/0067018 A1	03-10-2016	Korten et al. (corr. to EP 2799032 below)	
		US-2003/0156283 A1	08-21-2003	Jung et al. (corr. to WO 2003/073457 below)	
		US-2015/0054922 A1	02-26-2015	Fisker et al. (corr. to WO 2010/145669 below)	
		US-2013/0218530 A1	08-22-2013	Deichmann et al. (corr. to WO 2012/000511 below)	
		US-2013/0218531 A1	08-22-2013	Deichmann et al. (corr. to WO 2012/007003 below)	
		US-2014/0377718 A1	12-25-2014	Korten et al. (corr. to WO 2013/122662 below)	
		US-2016/0022389 A1	01-28-2016	Esbech et al. (corr. to WO 2014/125037 below)	
		US-8,570,530 B2	10-29-2013	Liang	
		US-8,532,355 B2	09-10-2013	Quadling et al.	
		US-8,144,954 B2	03-27-2012	Quadling et al.	
		US-8,121,718 B2	02-21-2012	Rubbert et al.	
		US-6,334,773 B1	01-01-2002	Ahlen et al.	
		US-6,081,739 A	06-27-2000	Lemchen	

FOREIGN PATENT DOCUMENTS

Examiner Initials'	Cite No.[1]	Foreign Patent Document Country Code[3] Number[4] Kind Code[5] *(if known)*	Publication Date MM-DD-YYYY	Name of Patentee or Applicant of Cited Document	Pages, Columns, Lines, Where Relevant Passages or Relevant Figures Appear	T[6]
		EP 2 325 771 A2	05-25-2011	SIRONA DENTAL SYSTEMS GMBH		
		EP 2 799 032 A1	11-05-2014	3M INNOVATIVE PROPERTIES CO		
		WO 2003/073457 A2	09-04-2003	LJ LAB LLC		
		WO 2006/065955 A2	06-22-2006	ORTHOCLEAR HOLDING INC		
		WO 2010/145669 A1	12-23-2010	3SHAPE AS		
		WO 2012/000511 A1	01-05-2012	3SHAPE AS		
		WO 2012/007003 A1	01-19-2012	3SHAPE AS		
		WO 2013/122662 A1	08-22-2013	3M INNOVATIVE PROPERTIES CO		
		WO 2014/125037 A1	08-21-2014	3SHAPE AS		

NON PATENT LITERATURE DOCUMENTS

Examiner Initials*	Cite No.[1]	Include name of the author (in CAPITAL LETTERS), title of the article (when appropriate), title of the item (book, magazine, journal, serial, symposium, catalog, etc.), date, page(s), volume-issue number(s), publisher, city and/or country where published.	T[2]
		International Search Report (PCT/ISA/210) mailed on May 11, 2015, by the European Patent Office as the International Searching Authority for International Application No. PCT/EP2015/052537.	
		Written Opinion (PCT/ISA/237) mailed on May 11, 2015, by the European Patent Office as the International Searching Authority for International Application No. PCT/EP2015/052537.	

Examiner Signature		Date Considered	

*EXAMINER: Initial if reference considered, whether or not citation is in conformance with MPEP 609. Draw line through citation if not in conformance and not considered. Include copy of this form with next communication to applicant. [1] Applicant's unique citation designation number (optional). [2] See Kinds Codes of USPTO Patent Documents at www.uspto.gov or MPEP 901.04. [3] Enter Office that issued the document, by the two-letter code (WIPO Standard ST.3). [4] For Japanese patent documents, the indication of the year of the reign of the Emperor must precede the serial number of the patent document. [5] Kind of document by the appropriate symbols as indicated on the document under WIPO Standard ST.16 if possible. [6] Applicant is to place a check mark here if English language Translation is attached.

Electronic Patent Application Fee Transmittal

Application Number:	
Filing Date:	
Title of Invention:	DETECTING TOOTH SHADE
First Named Inventor/Applicant Name:	Bo ESBECH
Filer:	Travis Dean Boone/Beverly Caraway
Attorney Docket Number:	0079124-000162

Filed as Large Entity

Filing Fees for Utility under 35 USC 111(a)

Description	Fee Code	Quantity	Amount	Sub-Total in USD($)
Basic Filing:				
UTILITY APPLICATION FILING	1011	1	300	300
UTILITY SEARCH FEE	1111	1	660	660
UTILITY EXAMINATION FEE	1311	1	760	760
Pages:				
Claims:				
Miscellaneous-Filing:				
Petition:				
Patent-Appeals-and-Interference:				

Description	Fee Code	Quantity	Amount	Sub-Total in USD($)
Post-Allowance-and-Post-Issuance:				
Extension-of-Time:				
Miscellaneous:				
		Total in USD ($)		**1720**

Electronic Acknowledgement Receipt	
EFS ID:	31704332
Application Number:	15888764
International Application Number:	
Confirmation Number:	3964
Title of Invention:	DETECTING TOOTH SHADE
First Named Inventor/Applicant Name:	Bo ESBECH
Customer Number:	21839
Filer:	Travis Dean Boone/Beverly Caraway
Filer Authorized By:	Travis Dean Boone
Attorney Docket Number:	0079124-000162
Receipt Date:	05-FEB-2018
Filing Date:	
Time Stamp:	16:54:17
Application Type:	Utility under 35 USC 111(a)

Payment information:

Submitted with Payment	yes
Payment Type	CARD
Payment was successfully received in RAM	$1720
RAM confirmation Number	020618INTEFSW16545900
Deposit Account	
Authorized User	
The Director of the USPTO is hereby authorized to charge indicated fees and credit any overpayment as follows:	

File Listing:

Document Number	Document Description	File Name	File Size(Bytes)/ Message Digest	Multi Part /.zip	Pages (if appl.)
1	Transmittal of New Application	TL.pdf	93519 960c74646810c964c00a4a2d76a387051161cb8b	no	2
Warnings:					
Information:					
2	Authorization for Extension of Time all replies	GA.pdf	86565 801b59076ef3c6cdb6ca7bc66414af4fd6a94723	no	1
Warnings:					
Information:					
3	Power of Attorney	POA.pdf	262344 55c16b9fa981e2b9daa0d8666089b31a1596cdbf	no	1
Warnings:					
Information:					
4	Assignee showing of ownership per 37 CFR 3.73	373C.pdf	810497 86f947d9a643c08fabb6ab83f0e1181a4c41ca03	no	4
Warnings:					
Information:					
5	Application Data Sheet	ADS.pdf	1823170 d914e789bb22d66ac2236fb12ac2d4c2f6764bf7	no	9
Warnings:					
Information:					
6		SPEC.pdf	329095 76bfbc3ee9a358c0b9bcea90ede1cdc2bdac3dcb	yes	43
	Multipart Description/PDF files in .zip description				
	Document Description		**Start**	**End**	

	Specification		1	39	
	Claims		40	42	
	Abstract		43	43	
Warnings:					
Information:					
7	Drawings-only black and white line drawings	DRAW.pdf	2112919 ded14e4baeb4d1e5a1282e3e66cee2b05103a348	no	9
Warnings:					
Information:					
8	Information Disclosure Statement (IDS) Form (SB08)	IDS_SB08.pdf	180918 c2500fa2e4f885766becdcaf9975ce787a484bf3	no	2
Warnings:					
Information:					
This is not an USPTO supplied IDS fillable form					
9	Fee Worksheet (SB06)	fee-info.pdf	34707 d322b0095584c144e3fb4166e53f223bd5f0224c	no	2
Warnings:					
Information:					
		Total Files Size (in bytes):	5733734		

This Acknowledgement Receipt evidences receipt on the noted date by the USPTO of the indicated documents, characterized by the applicant, and including page counts, where applicable. It serves as evidence of receipt similar to a Post Card, as described in MPEP 503.

New Applications Under 35 U.S.C. 111
If a new application is being filed and the application includes the necessary components for a filing date (see 37 CFR 1.53(b)-(d) and MPEP 506), a Filing Receipt (37 CFR 1.54) will be issued in due course and the date shown on this Acknowledgement Receipt will establish the filing date of the application.
National Stage of an International Application under 35 U.S.C. 371
If a timely submission to enter the national stage of an international application is compliant with the conditions of 35 U.S.C. 371 and other applicable requirements a Form PCT/DO/EO/903 indicating acceptance of the application as a national stage submission under 35 U.S.C. 371 will be issued in addition to the Filing Receipt, in due course.
New International Application Filed with the USPTO as a Receiving Office
If a new international application is being filed and the international application includes the necessary components for an international filing date (see PCT Article 11 and MPEP 1810), a Notification of the International Application Number and of the International Filing Date (Form PCT/RO/105) will be issued in due course, subject to prescriptions concerning national security, and the date shown on this Acknowledgement Receipt will establish the international filing date of the application.

PATENT ASSIGNMENT COVER SHEET

Electronic Version v1.1
Stylesheet Version v1.2

EPAS ID: PAT4810090

SUBMISSION TYPE:	NEW ASSIGNMENT
NATURE OF CONVEYANCE:	ASSIGNMENT

CONVEYING PARTY DATA

Name	Execution Date
BO ESBECH	03/30/2017
RUNE FISKER	03/30/2017
LARS HENRIKSEN	03/30/2017
TAIS CLAUSEN	03/31/2017

RECEIVING PARTY DATA

Name:	3SHAPE A/S
Street Address:	HOLMENS KANAL 7
City:	COPENHAGEN K
State/Country:	DENMARK
Postal Code:	DK-1060

PROPERTY NUMBERS Total: 1

Property Type	Number
Application Number:	15888764

CORRESPONDENCE DATA

Fax Number: (703)836-7419

Correspondence will be sent to the e-mail address first; if that is unsuccessful, it will be sent using a fax number, if provided; if that is unsuccessful, it will be sent via US Mail.

Phone: 7038366620
Email: beverly.caraway@bipc.com
Correspondent Name: BUCHANAN INGERSOLL & ROONEY P.C.
Address Line 1: P.O. BOX 1404
Address Line 4: ALEXANDRIA, VIRGINIA 22313-1404

ATTORNEY DOCKET NUMBER:	0079124-000162
NAME OF SUBMITTER:	BEVERLY A. CARAWAY
SIGNATURE:	/Beverly A. Caraway/
DATE SIGNED:	02/05/2018
	This document serves as an Oath/Declaration (37 CFR 1.63).

Total Attachments: 2
source=DEC_ASG#page1.tif

source=DEC_ASG#page2.tif

Attorney Docket No. 0079124-000129

COMBINED DECLARATION AND ASSIGNMENT
(JOINT)

As one of the below named inventors, I hereby declare that this Declaration is directed to:

(1) ☒ PCT international application number PCT/EP2015/052537, filed on February 6, 2015, entitled DETECTING TOOTH SHADE; or

(2) ☐ the attached application entitled _____.

DECLARATION

As one of the below named inventors, I further declare that:

The above-identified application was made or authorized to be made by me.

I believe that I am an original joint inventor of a claimed invention in the application.

I have reviewed and understand the contents of the above-identified application, including the claims.

I acknowledge the duty to disclose to the U.S. Patent and Trademark Office all information known to me to be material to patentability as defined in Title 37, Code of Federal Regulations, § 1.56.

I hereby acknowledge that any willful false statement made in this declaration is punishable under 18 U.S.C. 1001 by fine or imprisonment of not more than five (5) years, or both.

ASSIGNMENT

THIS ASSIGNMENT, by the undersigned inventors (hereinafter referred to as "the Assignors"), respectively, witnesseth:

WHEREAS, the Assignors have invented certain new and useful improvements set forth in the application for Letters Patent of the United States identified above;

WHEREAS, 3Shape A/S, a corporation duly organized under and pursuant to the laws of DENMARK and having a principal place of business at Holmens Kanal 7, DK-1060 Copenhagen K, DENMARK (hereinafter referred to as "the Assignee"), is desirous of acquiring the entire right, title, and interest in and to said inventions, the right to file applications on said inventions and the entire right, title and interest in and to any applications, including provisional applications for Letters Patent of the United States or other countries claiming priority to said application, and in and to any Letters Patent or Patents, United States or foreign, to be obtained therefor and thereon.

NOW, THEREFORE, for good and sufficient consideration, the receipt of which is hereby acknowledged, the Assignors have sold, assigned, transferred, and set over, and by these presents does sell, assign, transfer, and set over, unto the Assignee, its successors, legal representatives, and assigns the entire right, title, and interest in and to the above-mentioned inventions, the right to file applications on said inventions and the entire right, title and interest in and to any applications for Letters Patent of the United States or other countries claiming priority to said applications, and any and all Letters Patent or Patents of the United States of America and all foreign countries that may be granted therefor and thereon, and in and to any and all applications claiming priority to said applications, divisions, continuations, and continuations-in-part of said applications, and reissues and extensions of said Letters Patent or Patents, and all rights under the International

Convention for the Protection of Industrial Property, the same to be held and enjoyed by the Assignee, for its own use and behoof and the use and behoof of its successors, legal representatives, and assigns, to the full end of the term or terms for which Letters Patent or Patents may be granted as fully and entirely as the same would have been held and enjoyed by the Assignors had this sale and assignment not been made;

AND for the same consideration, the Assignors hereby covenant and agree to and with the Assignee, its successors, legal representatives, and assigns, that, at the time of execution and delivery of these presents, the Assignors are the sole and lawful owners of the entire right, title, and interest in and to the inventions set forth in said applications and said applications, including provisional applications, above-mentioned, and that the same are unencumbered, and that the Assignors have good and full right and lawful authority to sell and convey the same in the manner herein set forth;

AND for the same consideration, the Assignors hereby covenant and agree to and with the Assignee, its successors, legal representatives, and assigns that the Assignors will, whenever counsel of the Assignee, or the counsel of its successors, legal representatives, and assigns, shall advise that any proceeding in connection with said inventions or said applications for Letters Patent or Patents, or any proceeding in connection with Letters Patent or Patents for said inventions in any country, including interference proceedings, is lawful and desirable, or that any application claiming priority to said application, division, continuation, or continuation-in-part of any applications for Letters Patent or Patents, or any reissue or extension of any Letters Patent or Patents to be obtained thereon, is lawful and desirable, sign all papers and documents, take all lawful oaths, and do all acts necessary or required to be done for the procurement, maintenance, enforcement, and defense of Letters Patent or Patents for said inventions, without charge to the Assignee, its successors, legal representatives, and assigns, but at the cost and expense of the Assignee, its successors, legal representatives, and assigns;

AND the Assignors hereby request the Commissioner of Patents to issue any and all said Letters Patent of the United States to the Assignee as the Assignee of said inventions, the Letters Patent to be issued for the sole use and behoof of the Assignee, its successors, legal representatives, and assigns.

Date	Name	Signature
30/3-2017	BO ESBECH	Bo Esbech
31/3 2017	RUNE FISKER	
30/3 2017	LARS HENRIKSEN	
31/3 2017	TAIS CLAUSEN	

UNITED STATES PATENT AND TRADEMARK OFFICE

UNITED STATES DEPARTMENT OF COMMERCE
United States Patent and Trademark Office
Address: COMMISSIONER FOR PATENTS
P.O. Box 1450
Alexandria, Virginia 22313-1450
www.uspto.gov

APPLICATION NUMBER	FILING or 371(c) DATE	GRP ART UNIT	FIL FEE REC'D	ATTY.DOCKET.NO	TOT CLAIMS	IND CLAIMS
15/888,764	02/05/2018	2877	1720	0079124-000162	18	1

CONFIRMATION NO. 3964

FILING RECEIPT

21839
BUCHANAN, INGERSOLL & ROONEY PC
POST OFFICE BOX 1404
ALEXANDRIA, VA 22313-1404

OC000000097721932

Date Mailed: 03/02/2018

Receipt is acknowledged of this non-provisional patent application. The application will be taken up for examination in due course. Applicant will be notified as to the results of the examination. Any correspondence concerning the application must include the following identification information: the U.S. APPLICATION NUMBER, FILING DATE, NAME OF APPLICANT, and TITLE OF INVENTION. Fees transmitted by check or draft are subject to collection. Please verify the accuracy of the data presented on this receipt. **If an error is noted on this Filing Receipt, please submit a written request for a Filing Receipt Correction. Please provide a copy of this Filing Receipt with the changes noted thereon. If you received a "Notice to File Missing Parts" for this application, please submit any corrections to this Filing Receipt with your reply to the Notice. When the USPTO processes the reply to the Notice, the USPTO will generate another Filing Receipt incorporating the requested corrections**

Inventor(s)

Bo ESBECH, Gentofte, DENMARK;
Rune FISKER, Virum, DENMARK;
Lars HENRIKSEN, Bagsværd, DENMARK;
Tais CLAUSEN, Klagshamn, SWEDEN;

Applicant(s)

3SHAPE A/S, Copenhagen K, DENMARK;

Assignment For Published Patent Application

3SHAPE A/S, Copenhagen K, DENMARK

Power of Attorney: The patent practitioners associated with Customer Number 21839

Domestic Priority data as claimed by applicant

This application is a CON of 15/117,078 08/05/2016
which is a 371 of PCT/EP2015/052537 02/06/2015

Foreign Applications (You may be eligible to benefit from the **Patent Prosecution Highway** program at the USPTO. Please see http://www.uspto.gov for more information.)
DENMARK PA 2014 70066 02/07/2014 No Access Code Provided

Permission to Access Application via Priority Document Exchange: Yes

Permission to Access Search Results: Yes

Applicant may provide or rescind an authorization for access using Form PTO/SB/39 or Form PTO/SB/69 as appropriate.

If Required, Foreign Filing License Granted: 02/28/2018

The country code and number of your priority application, to be used for filing abroad under the Paris Convention, is **US 15/888,764**

Projected Publication Date: 06/07/2018

Non-Publication Request: No

Early Publication Request: No
Title

DETECTING TOOTH SHADE

Preliminary Class

356

Statement under 37 CFR 1.55 or 1.78 for AIA (First Inventor to File) Transition Applications: No

PROTECTING YOUR INVENTION OUTSIDE THE UNITED STATES

Since the rights granted by a U.S. patent extend only throughout the territory of the United States and have no effect in a foreign country, an inventor who wishes patent protection in another country must apply for a patent in a specific country or in regional patent offices. Applicants may wish to consider the filing of an international application under the Patent Cooperation Treaty (PCT). An international (PCT) application generally has the same effect as a regular national patent application in each PCT-member country. The PCT process **simplifies** the filing of patent applications on the same invention in member countries, but **does not result** in a grant of "an international patent" and does not eliminate the need of applicants to file additional documents and fees in countries where patent protection is desired.

Almost every country has its own patent law, and a person desiring a patent in a particular country must make an application for patent in that country in accordance with its particular laws. Since the laws of many countries differ in various respects from the patent law of the United States, applicants are advised to seek guidance from specific foreign countries to ensure that patent rights are not lost prematurely.

Applicants also are advised that in the case of inventions made in the United States, the Director of the USPTO must issue a license before applicants can apply for a patent in a foreign country. The filing of a U.S. patent application serves as a request for a foreign filing license. The application's filing receipt contains further information and guidance as to the status of applicant's license for foreign filing.

Applicants may wish to consult the USPTO booklet, "General Information Concerning Patents" (specifically, the section entitled "Treaties and Foreign Patents") for more information on timeframes and deadlines for filing foreign patent applications. The guide is available either by contacting the USPTO Contact Center at 800-786-9199, or it can be viewed on the USPTO website at http://www.uspto.gov/web/offices/pac/doc/general/index.html.

For information on preventing theft of your intellectual property (patents, trademarks and copyrights), you may wish to consult the U.S. Government website, http://www.stopfakes.gov. Part of a Department of Commerce initiative, this website includes self-help "toolkits" giving innovators guidance on how to protect intellectual property in specific countries such as China, Korea and Mexico. For questions regarding patent enforcement issues, applicants may call the U.S. Government hotline at 1-866-999-HALT (1-866-999-4258).

LICENSE FOR FOREIGN FILING UNDER

Title 35, United States Code, Section 184

Title 37, Code of Federal Regulations, 5.11 & 5.15

GRANTED

The applicant has been granted a license under 35 U.S.C. 184, if the phrase "IF REQUIRED, FOREIGN FILING LICENSE GRANTED" followed by a date appears on this form. Such licenses are issued in all applications where the conditions for issuance of a license have been met, regardless of whether or not a license may be required as set forth in 37 CFR 5.15. The scope and limitations of this license are set forth in 37 CFR 5.15(a) unless an earlier license has been issued under 37 CFR 5.15(b). The license is subject to revocation upon written notification. The date indicated is the effective date of the license, unless an earlier license of similar scope has been granted under 37 CFR 5.13 or 5.14.

This license is to be retained by the licensee and may be used at any time on or after the effective date thereof unless it is revoked. This license is automatically transferred to any related applications(s) filed under 37 CFR 1.53(d). This license is not retroactive.

The grant of a license does not in any way lessen the responsibility of a licensee for the security of the subject matter as imposed by any Government contract or the provisions of existing laws relating to espionage and the national security or the export of technical data. Licensees should apprise themselves of current regulations especially with respect to certain countries, of other agencies, particularly the Office of Defense Trade Controls, Department of State (with respect to Arms, Munitions and Implements of War (22 CFR 121-128)); the Bureau of Industry and Security, Department of Commerce (15 CFR parts 730-774); the Office of Foreign AssetsControl, Department of Treasury (31 CFR Parts 500+) and the Department of Energy.

NOT GRANTED

No license under 35 U.S.C. 184 has been granted at this time, if the phrase "IF REQUIRED, FOREIGN FILING LICENSE GRANTED" DOES NOT appear on this form. Applicant may still petition for a license under 37 CFR 5.12, if a license is desired before the expiration of 6 months from the filing date of the application. If 6 months has lapsed from the filing date of this application and the licensee has not received any indication of a secrecy order under 35 U.S.C. 181, the licensee may foreign file the application pursuant to 37 CFR 5.15(b).

SelectUSA

The United States represents the largest, most dynamic marketplace in the world and is an unparalleled location for business investment, innovation, and commercialization of new technologies. The U.S. offers tremendous resources and advantages for those who invest and manufacture goods here. Through SelectUSA, our nation works to promote and facilitate business investment. SelectUSA provides information assistance to the international investor community; serves as an ombudsman for existing and potential investors; advocates on behalf of U.S. cities, states, and regions competing for global investment; and counsels U.S. economic development organizations on investment attraction best practices. To learn more about why the United States is the best country in the world to develop technology, manufacture products, deliver services, and grow your business, visit http://www.SelectUSA.gov or call +1-202-482-6800.

PATENT APPLICATION FEE DETERMINATION RECORD Substitute for Form PTO-875	Application or Docket Number 15/888,764

APPLICATION AS FILED - PART I

FOR	(Column 1) NUMBER FILED	(Column 2) NUMBER EXTRA	SMALL ENTITY RATE($)	SMALL ENTITY FEE($)	OR	OTHER THAN SMALL ENTITY RATE($)	OTHER THAN SMALL ENTITY FEE($)
BASIC FEE (37 CFR 1.16(a), (b), or (c))	N/A	N/A	N/A			N/A	300
SEARCH FEE (37 CFR 1.16(k), (i), or (m))	N/A	N/A	N/A			N/A	660
EXAMINATION FEE (37 CFR 1.16(o), (p), or (q))	N/A	N/A	N/A			N/A	760
TOTAL CLAIMS (37 CFR 1.16(i))	18 minus 20 =	*			OR	x 100 =	0.00
INDEPENDENT CLAIMS (37 CFR 1.16(h))	1 minus 3 =	*				x 460 =	0.00
APPLICATION SIZE FEE (37 CFR 1.16(s))	If the specification and drawings exceed 100 sheets of paper, the application size fee due is $310 ($155 for small entity) for each additional 50 sheets or fraction thereof. See 35 U.S.C. 41(a)(1)(G) and 37 CFR 1.16(s).						0.00
MULTIPLE DEPENDENT CLAIM PRESENT (37 CFR 1.16(j))							0.00
* If the difference in column 1 is less than zero, enter "0" in column 2.			TOTAL			TOTAL	1720

APPLICATION AS AMENDED - PART II

		(Column 1) CLAIMS REMAINING AFTER AMENDMENT		(Column 2) HIGHEST NUMBER PREVIOUSLY PAID FOR	(Column 3) PRESENT EXTRA	SMALL ENTITY RATE($)	SMALL ENTITY ADDITIONAL FEE($)	OR	OTHER THAN SMALL ENTITY RATE($)	OTHER THAN SMALL ENTITY ADDITIONAL FEE($)
AMENDMENT A	Total (37 CFR 1.16(i))	*	Minus	**	=	x =		OR	x =	
AMENDMENT A	Independent (37 CFR 1.16(h))	*	Minus	***	=	x =		OR	x =	
AMENDMENT A	Application Size Fee (37 CFR 1.16(s))									
AMENDMENT A	FIRST PRESENTATION OF MULTIPLE DEPENDENT CLAIM (37 CFR 1.16(j))							OR		
						TOTAL ADD'L FEE		OR	TOTAL ADD'L FEE	

		(Column 1) CLAIMS REMAINING AFTER AMENDMENT		(Column 2) HIGHEST NUMBER PREVIOUSLY PAID FOR	(Column 3) PRESENT EXTRA	RATE($)	ADDITIONAL FEE($)		RATE($)	ADDITIONAL FEE($)
AMENDMENT B	Total (37 CFR 1.16(i))	*	Minus	**	=	x =		OR	x =	
AMENDMENT B	Independent (37 CFR 1.16(h))	*	Minus	***	=	x =		OR	x =	
AMENDMENT B	Application Size Fee (37 CFR 1.16(s))									
AMENDMENT B	FIRST PRESENTATION OF MULTIPLE DEPENDENT CLAIM (37 CFR 1.16(j))							OR		
						TOTAL ADD'L FEE		OR	TOTAL ADD'L FEE	

* If the entry in column 1 is less than the entry in column 2, write "0" in column 3.
** If the "Highest Number Previously Paid For" IN THIS SPACE is less than 20, enter "20".
*** If the "Highest Number Previously Paid For" IN THIS SPACE is less than 3, enter "3".
The "Highest Number Previously Paid For" (Total or Independent) is the highest found in the appropriate box in column 1.

UNITED STATES PATENT AND TRADEMARK OFFICE

UNITED STATES DEPARTMENT OF COMMERCE
United States Patent and Trademark Office
Address: COMMISSIONER FOR PATENTS
P.O. Box 1450
Alexandria, Virginia 22313-1450
www.uspto.gov

APPLICATION NUMBER	FILING OR 371(C) DATE	FIRST NAMED APPLICANT	ATTY. DOCKET NO./TITLE
15/888,764	02/05/2018	Bo ESBECH	0079124-000162

CONFIRMATION NO. 3964

21839
BUCHANAN, INGERSOLL & ROONEY PC
POST OFFICE BOX 1404
ALEXANDRIA, VA 22313-1404

PUBLICATION NOTICE

OC000000100099224

Title:DETECTING TOOTH SHADE

Publication No.US-2018-0153664-A1
Publication Date:06/07/2018

NOTICE OF PUBLICATION OF APPLICATION

The above-identified application will be electronically published as a patent application publication pursuant to 37 CFR 1.211, et seq. The patent application publication number and publication date are set forth above.

The publication may be accessed through the USPTO's publically available Searchable Databases via the Internet at www.uspto.gov. The direct link to access the publication is currently http://www.uspto.gov/patft/.

The publication process established by the Office does not provide for mailing a copy of the publication to applicant. A copy of the publication may be obtained from the Office upon payment of the appropriate fee set forth in 37 CFR 1.19(a)(1). Orders for copies of patent application publications are handled by the USPTO's Public Records Division. The Public Records Division can be reached by telephone at (571) 272-3150 or (800) 972-6382, by facsimile at (571) 273-3250, by mail addressed to the United States Patent and Trademark Office, Public Records Division, Alexandria, VA 22313-1450 or via the Internet.

In addition, information on the status of the application, including the mailing date of Office actions and the dates of receipt of correspondence filed in the Office, may also be accessed via the Internet through the Patent Electronic Business Center at www.uspto.gov using the public side of the Patent Application Information and Retrieval (PAIR) system. The direct link to access this status information is currently https://portal.uspto.gov/pair/PublicPair. Prior to publication, such status information is confidential and may only be obtained by applicant using the private side of PAIR.

Further assistance in electronically accessing the publication, or about PAIR, is available by calling the Patent Electronic Business Center at 1-866-217-9197.

Office of Data Managment, Application Assistance Unit (571) 272-4000, or (571) 272-4200, or 1-888-786-0101

PTO/SB/08a (01-10)
Approved for use through 07/31/2012. OMB 0651-0031
U.S. Patent and Trademark Office; U.S. DEPARTMENT OF COMMERCE
Under the Paperwork Reduction Act of 1995, no persons are required to respond to a collection of information unless it contains a valid OMB control number.

INFORMATION DISCLOSURE STATEMENT BY APPLICANT

(Not for submission under 37 CFR 1.99)

Application Number	15888764
Filing Date	2018-02-05
First Named Inventor	Bo ESBECH
Art Unit	2669
Examiner Name	KASSA, YOSEF
Attorney Docket Number	0079124-000162

U.S.PATENTS Remove

Examiner Initial*	Cite No	Patent Number	Kind Code[1]	Issue Date	Name of Patentee or Applicant of cited Document	Pages,Columns,Lines where Relevant Passages or Relevant Figures Appear
	1	8144954	B2	2012-03-27	Quadling et al.	
	2	7027642	B2	2006-04-11	Rubbert et al.	
	3	7296996	B2	2007-11-20	Sachdeva et al.	
	4	7355721	B2	2008-04-08	Quadling et al.	

If you wish to add additional U.S. Patent citation information please click the Add button. Add

U.S.PATENT APPLICATION PUBLICATIONS Remove

Examiner Initial*	Cite No	Publication Number	Kind Code[1]	Publication Date	Name of Patentee or Applicant of cited Document	Pages,Columns,Lines where Relevant Passages or Relevant Figures Appear
	1					

If you wish to add additional U.S. Published Application citation information please click the Add button. Add

FOREIGN PATENT DOCUMENTS Remove

Examiner Initial*	Cite No	Foreign Document Number[3]	Country Code[2] i	Kind Code[4]	Publication Date	Name of Patentee or Applicant of cited Document	Pages,Columns,Lines where Relevant Passages or Relevant Figures Appear	T[5]

INFORMATION DISCLOSURE STATEMENT BY APPLICANT (Not for submission under 37 CFR 1.99)	Application Number	15888764
	Filing Date	2018-02-05
	First Named Inventor	Bo ESBECH
	Art Unit	2669
	Examiner Name	KASSA, YOSEF
	Attorney Docket Number	0079124-000162

	1						

If you wish to add additional Foreign Patent Document citation information please click the Add button Add

NON-PATENT LITERATURE DOCUMENTS Remove

Examiner Initials*	Cite No	Include name of the author (in CAPITAL LETTERS), title of the article (when appropriate), title of the item (book, magazine, journal, serial, symposium, catalog, etc), date, pages(s), volume-issue number(s), publisher, city and/or country where published.	T[5]
	1	IEEE Xplore Search Results (4 pages), accessed March 2, 2018; this document was made of record by the Examiner on March 13, 2018, in the parent application (U.S. App. No. 15/117,078)	

If you wish to add additional non-patent literature document citation information please click the Add button Add

EXAMINER SIGNATURE

Examiner Signature		Date Considered	

*EXAMINER: Initial if reference considered, whether or not citation is in conformance with MPEP 609. Draw line through a citation if not in conformance and not considered. Include copy of this form with next communication to applicant.

[1] See Kind Codes of USPTO Patent Documents at www.USPTO.GOV or MPEP 901.04. [2] Enter office that issued the document, by the two-letter code (WIPO Standard ST.3). [3] For Japanese patent documents, the indication of the year of the reign of the Emperor must precede the serial number of the patent document. [4] Kind of document by the appropriate symbols as indicated on the document under WIPO Standard ST.16 if possible. [5] Applicant is to place a check mark here if English language translation is attached.

INFORMATION DISCLOSURE STATEMENT BY APPLICANT (Not for submission under 37 CFR 1.99)		
	Application Number	15888764
	Filing Date	2018-02-05
	First Named Inventor	Bo ESBECH
	Art Unit	2669
	Examiner Name	KASSA, YOSEF
	Attorney Docket Number	0079124-000162

CERTIFICATION STATEMENT

Please see 37 CFR 1.97 and 1.98 to make the appropriate selection(s):

That each item of information contained in the information disclosure statement was first cited in any communication from a foreign patent office in a counterpart foreign application not more than three months prior to the filing of the information disclosure statement. See 37 CFR 1.97(e)(1).

OR

☐ That no item of information contained in the information disclosure statement was cited in a communication from a foreign patent office in a counterpart foreign application, and, to the knowledge of the person signing the certification after making reasonable inquiry, no item of information contained in the information disclosure statement was known to any individual designated in 37 CFR 1.56(c) more than three months prior to the filing of the information disclosure statement. See 37 CFR 1.97(e)(2).

See attached certification statement.

The fee set forth in 37 CFR 1.17 (p) has been submitted herewith.

☒ A certification statement is not submitted herewith.

SIGNATURE

A signature of the applicant or representative is required in accordance with CFR 1.33, 10.18. Please see CFR 1.4(d) for the form of the signature.

Signature	/Travis D. Boone/	Date (YYYY-MM-DD)	2018-07-12
Name/Print	Travis D. Boone	Registration Number	52,635

This collection of information is required by 37 CFR 1.97 and 1.98. The information is required to obtain or retain a benefit by the public which is to file (and by the USPTO to process) an application. Confidentiality is governed by 35 U.S.C. 122 and 37 CFR 1.14. This collection is estimated to take 1 hour to complete, including gathering, preparing and submitting the completed application form to the USPTO. Time will vary depending upon the individual case. Any comments on the amount of time you require to complete this form and/or suggestions for reducing this burden, should be sent to the Chief Information Officer, U.S. Patent and Trademark Office, U.S. Department of Commerce, P.O. Box 1450, Alexandria, VA 22313-1450. DO NOT SEND FEES OR COMPLETED FORMS TO THIS ADDRESS. **SEND TO: Commissioner for Patents, P.O. Box 1450, Alexandria, VA 22313-1450.**

Privacy Act Statement

The Privacy Act of 1974 (P.L. 93-579) requires that you be given certain information in connection with your submission of the attached form related to a patent application or patent. Accordingly, pursuant to the requirements of the Act, please be advised that: (1) the general authority for the collection of this information is 35 U.S.C. 2(b)(2); (2) furnishing of the information solicited is voluntary; and (3) the principal purpose for which the information is used by the U.S. Patent and Trademark Office is to process and/or examine your submission related to a patent application or patent. If you do not furnish the requested information, the U.S. Patent and Trademark Office may not be able to process and/or examine your submission, which may result in termination of proceedings or abandonment of the application or expiration of the patent.

The information provided by you in this form will be subject to the following routine uses:

1. The information on this form will be treated confidentially to the extent allowed under the Freedom of Information Act (5 U.S.C. 552) and the Privacy Act (5 U.S.C. 552a). Records from this system of records may be disclosed to the Department of Justice to determine whether the Freedom of Information Act requires disclosure of these record s.

2. A record from this system of records may be disclosed, as a routine use, in the course of presenting evidence to a court, magistrate, or administrative tribunal, including disclosures to opposing counsel in the course of settlement negotiations.

3. A record in this system of records may be disclosed, as a routine use, to a Member of Congress submitting a request involving an individual, to whom the record pertains, when the individual has requested assistance from the Member with respect to the subject matter of the record.

4. A record in this system of records may be disclosed, as a routine use, to a contractor of the Agency having need for the information in order to perform a contract. Recipients of information shall be required to comply with the requirements of the Privacy Act of 1974, as amended, pursuant to 5 U.S.C. 552a(m).

5. A record related to an International Application filed under the Patent Cooperation Treaty in this system of records may be disclosed, as a routine use, to the International Bureau of the World Intellectual Property Organization, pursuant to the Patent Cooperation Treaty.

6. A record in this system of records may be disclosed, as a routine use, to another federal agency for purposes of National Security review (35 U.S.C. 181) and for review pursuant to the Atomic Energy Act (42 U.S.C. 218(c)).

7. A record from this system of records may be disclosed, as a routine use, to the Administrator, General Services, or his/her designee, during an inspection of records conducted by GSA as part of that agency's responsibility to recommend improvements in records management practices and programs, under authority of 44 U.S.C. 2904 and 2906. Such disclosure shall be made in accordance with the GSA regulations governing inspection of records for this purpose, and any other relevant (i.e., GSA or Commerce) directive. Such disclosure shall not be used to make determinations about individuals.

8. A record from this system of records may be disclosed, as a routine use, to the public after either publication of the application pursuant to 35 U.S.C. 122(b) or issuance of a patent pursuant to 35 U.S.C. 151. Further, a record may be disclosed, subject to the limitations of 37 CFR 1.14, as a routine use, to the public if the record was filed in an application which became abandoned or in which the proceedings were terminated and which application is referenced by either a published application, an application open to public inspections or an issued patent.

9. A record from this system of records may be disclosed, as a routine use, to a Federal, State, or local law enforcement agency, if the USPTO becomes aware of a violation or potential violation of law or regulation.

Electronic Acknowledgement Receipt

EFS ID:	33160188
Application Number:	15888764
International Application Number:	
Confirmation Number:	3964
Title of Invention:	DETECTING TOOTH SHADE
First Named Inventor/Applicant Name:	Bo ESBECH
Customer Number:	21839
Filer:	Travis Dean Boone/Snjezana Gvozderac
Filer Authorized By:	Travis Dean Boone
Attorney Docket Number:	0079124-000162
Receipt Date:	12-JUL-2018
Filing Date:	05-FEB-2018
Time Stamp:	13:50:26
Application Type:	Utility under 35 USC 111(a)

Payment information:

Submitted with Payment	no

File Listing:

Document Number	Document Description	File Name	File Size(Bytes)/ Message Digest	Multi Part /.zip	Pages (if appl.)
1	Transmittal Letter	IDS_Transmittal.pdf	109692 74a64a504418d5c8c047d291b9c385a57d6c9e5c	no	1

Warnings:

Information:					
2	Information Disclosure Statement (IDS) Form (SB08)	PTO_SB08.pdf	612260 2d7845e38363f60f7704657b840c987ff1f4cd1d	no	4
Warnings:					
Information:					
3	Non Patent Literature	NPL1_Ref_from_Examiner.pdf	387248 2cc33c2a8190733cd04872be6554403b5f38720f	no	4
Warnings:					
Information:					
			Total Files Size (in bytes):	1109200	

This Acknowledgement Receipt evidences receipt on the noted date by the USPTO of the indicated documents, characterized by the applicant, and including page counts, where applicable. It serves as evidence of receipt similar to a Post Card, as described in MPEP 503.

New Applications Under 35 U.S.C. 111
If a new application is being filed and the application includes the necessary components for a filing date (see 37 CFR 1.53(b)-(d) and MPEP 506), a Filing Receipt (37 CFR 1.54) will be issued in due course and the date shown on this Acknowledgement Receipt will establish the filing date of the application.
National Stage of an International Application under 35 U.S.C. 371
If a timely submission to enter the national stage of an international application is compliant with the conditions of 35 U.S.C. 371 and other applicable requirements a Form PCT/DO/EO/903 indicating acceptance of the application as a national stage submission under 35 U.S.C. 371 will be issued in addition to the Filing Receipt, in due course.
New International Application Filed with the USPTO as a Receiving Office
If a new international application is being filed and the international application includes the necessary components for an international filing date (see PCT Article 11 and MPEP 1810), a Notification of the International Application Number and of the International Filing Date (Form PCT/RO/105) will be issued in due course, subject to prescriptions concerning national security, and the date shown on this Acknowledgement Receipt will establish the international filing date of the application.

IN THE UNITED STATES PATENT AND TRADEMARK OFFICE

In re Patent Application of	)	
Bo ESBECH	)	Group Art Unit: 2669
Application No.: 15/888,764	)	Examiner: Yosef KASSA
Filed: February 5, 2018	)	Confirmation No.: 3964
For: DETECTING TOOTH SHADE	)	

SECOND INFORMATION DISCLOSURE STATEMENT TRANSMITTAL LETTER

Commissioner for Patents
P.O. Box 1450
Alexandria, VA 22313-1450

Commissioner:

In accordance with the duty of disclosure as set forth in 37 C.F.R. § 1.56, the accompanying information is being submitted in accordance with 37 C.F.R. §§ 1.97 and 1.98.

The Examiner's attention is directed to copending application number 15/117,078 filed on August 5, 2016 (parent to the present application). The documents of record in the copending application are listed on the attached form PTO-1449. Since the copending application is available in the Patent Application Information Retrieval (PAIR) system, a copy of the copending application is not required to be submitted. By citation to the copending application, confidentiality is not waived and the Office is requested to maintain the confidentiality of the copending application under 35 U.S.C. § 122.

To assist the Examiner, the documents are listed on the attached citation form. It is respectfully requested that an Examiner initialed copy of this form be returned to the undersigned.

Respectfully submitted,

BUCHANAN INGERSOLL AND ROONEY PC

Date: July 12, 2018

By: /Travis D. Boone/
Travis D. Boone
Registration No. 52,635

Customer No. 21839
703 836 6620
Buchanan Ingersoll & Rooney PC
Attorneys & Government Relations Professionals

UNITED STATES PATENT AND TRADEMARK OFFICE

UNITED STATES DEPARTMENT OF COMMERCE
United States Patent and Trademark Office
Address: COMMISSIONER FOR PATENTS
P.O. Box 1450
Alexandria, Virginia 22313-1450
www.uspto.gov

APPLICATION NO.	FILING DATE	FIRST NAMED INVENTOR	ATTORNEY DOCKET NO.	CONFIRMATION NO.
15/888,764	02/05/2018	Bo ESBECH	0079124-000162	3964

21839 7590 09/20/2019
BUCHANAN, INGERSOLL & ROONEY PC
POST OFFICE BOX 1404
ALEXANDRIA, VA 22313-1404

EXAMINER
KASSA, YOSEF

ART UNIT	PAPER NUMBER
2663	

NOTIFICATION DATE	DELIVERY MODE
09/20/2019	ELECTRONIC

Please find below and/or attached an Office communication concerning this application or proceeding.

The time period for reply, if any, is set in the attached communication.

Notice of the Office communication was sent electronically on above-indicated "Notification Date" to the following e-mail address(es):

ADIPDOC1@BIPC.com

PTOL-90A (Rev. 04/07)

Office Action Summary	Application No. 15/888,764	Applicant(s) ESBECH et al.	
	Examiner YOSEF KASSA	Art Unit 2663	AIA (FITF) Status Yes

-- The MAILING DATE of this communication appears on the cover sheet with the correspondence address --

Period for Reply

A SHORTENED STATUTORY PERIOD FOR REPLY IS SET TO EXPIRE 3 MONTHS FROM THE MAILING DATE OF THIS COMMUNICATION.

- Extensions of time may be available under the provisions of 37 CFR 1.136(a). In no event, however, may a reply be timely filed after SIX (6) MONTHS from the mailing date of this communication.
- If NO period for reply is specified above, the maximum statutory period will apply and will expire SIX (6) MONTHS from the mailing date of this communication.
- Failure to reply within the set or extended period for reply will, by statute, cause the application to become ABANDONED (35 U.S.C. § 133). Any reply received by the Office later than three months after the mailing date of this communication, even if timely filed, may reduce any earned patent term adjustment. See 37 CFR 1.704(b).

Status

1)☑ Responsive to communication(s) filed on 02/05/2018.

☐ A declaration(s)/affidavit(s) under **37 CFR 1.130(b)** was/were filed on _____.

2a)☐ This action is **FINAL.** 2b) ☑ This action is non-final.

3)☐ An election was made by the applicant in response to a restriction requirement set forth during the interview on _____; the restriction requirement and election have been incorporated into this action.

4)☐ Since this application is in condition for allowance except for formal matters, prosecution as to the merits is closed in accordance with the practice under *Ex parte Quayle*, 1935 C.D. 11, 453 O.G. 213.

Disposition of Claims*

5) ☑ Claim(s) 1-18 is/are pending in the application.

5a) Of the above claim(s) _____ is/are withdrawn from consideration.

6) ☐ Claim(s) _____ is/are allowed.

7) ☑ Claim(s) 1-3 and 10-13 is/are rejected.

8) ☑ Claim(s) 4-9 and 14-18 is/are objected to.

9) ☐ Claim(s) _____ are subject to restriction and/or election requirement

* If any claims have been determined allowable, you may be eligible to benefit from the **Patent Prosecution Highway** program at a participating intellectual property office for the corresponding application. For more information, please see http://www.uspto.gov/patents/init_events/pph/index.jsp or send an inquiry to **PPHfeedback@uspto.gov.**

Application Papers

10)☐ The specification is objected to by the Examiner.

11)☑ The drawing(s) filed on 02/05/2018 is/are: a)☑ accepted or b)☐ objected to by the Examiner.

Applicant may not request that any objection to the drawing(s) be held in abeyance. See 37 CFR 1.85(a).

Replacement drawing sheet(s) including the correction is required if the drawing(s) is objected to. See 37 CFR 1.121(d).

Priority under 35 U.S.C. § 119

12)☑ Acknowledgment is made of a claim for foreign priority under 35 U.S.C. § 119(a)-(d) or (f).

Certified copies:

a)☑ All b)☐ Some** c)☐ None of the:

1.☑ Certified copies of the priority documents have been received.

2.☐ Certified copies of the priority documents have been received in Application No. _____.

3.☐ Copies of the certified copies of the priority documents have been received in this National Stage application from the International Bureau (PCT Rule 17.2(a)).

** See the attached detailed Office action for a list of the certified copies not received.

Attachment(s)

1) ☑ Notice of References Cited (PTO-892)

2) ☑ Information Disclosure Statement(s) (PTO/SB/08a and/or PTO/SB/08b) Paper No(s)/Mail Date 02/05/2018; 07/12/2018.

3) ☐ Interview Summary (PTO-413) Paper No(s)/Mail Date _____.

4) ☐ Other: _____.

Notice of Pre-AIA or AIA Status

The present application, filed on or after March 16, 2013, is being examined under the first inventor to file provisions of the AIA.

Information Disclosure Statement

1. The information disclosure statement (IDS) submitted on 02/05/2018 and 07/12/2018 are made of a record. The submission is in compliance with the provisions of 37 CFR 1.97. Accordingly, the information disclosure statement is being considered by the examiner.

Double Patenting

2. The nonstatutory double patenting rejection is based on a judicially created doctrine grounded in public policy (a policy reflected in the statute) so as to prevent the unjustified or improper timewise extension of the "right to exclude" granted by a patent and to prevent possible harassment by multiple assignees. A nonstatutory obviousness-type double patenting rejection is appropriate where the conflicting claims are not identical, but at least one examined application claim is not patentably distinct from the reference claim(s) because the examined application claim is either anticipated by, or would have been obvious over, the reference claim(s). See, e.g., *In re Berg*, 140 F.3d 1428, 46 USPQ2d 1226 (Fed. Cir. 1998); *In re Goodman*, 11 F.3d 1046, 29 USPQ2d 2010 (Fed. Cir. 1993); *In re Longi*, 759 F.2d 887, 225 USPQ 645 (Fed. Cir. 1985); *In re Van Ornum*, 686 F.2d 937, 214 USPQ 761 (CCPA 1982); *In re Vogel*, 422 F.2d 438, 164 USPQ 619 (CCPA 1970); and *In re Thorington*, 418 F.2d 528, 163 USPQ 644 (CCPA 1969).

A timely filed terminal disclaimer in compliance with 37 CFR 1.321(c) or 1.321(d) may be used to overcome an actual or provisional rejection based on a non-statutory double patenting

ground provided the conflicting application or patent either is shown to be commonly owned with this application, or claims an invention made as a result of activities undertaken within the scope of a joint research agreement.

Effective January 1, 1994, a registered attorney or agent of record may sign a terminal disclaimer. A terminal disclaimer signed by the assignee must fully comply with 37 CFR 3.73(b).

Claims 1-18 are rejected on the ground of non-statutory obviousness-type double patenting as being unpatentable over claims 1-18 of U.S. patented application No. 8998719. Although the conflicting claims are not identical, they are not patentably distinct from each other because claim 1 of the instant application discloses "obtaining a digital 3D representation of the tooth, where the digital 3D representation comprises shape data and texture data for the tooth; and determining a tooth shade value for at least one point on the tooth based on the texture data of the corresponding point of the digital 3D representation and on known texture values of one or more reference tooth shade values"; and

claim 1 of the patented application 10010387 discloses "obtaining a digital 3D representation of the tooth, where the digital 3D representation comprises shape data and texture data for the tooth; determining a tooth shade value for at least one point on the tooth based on the texture data of the corresponding point of the digital 3D representation and on known texture values of one or more reference tooth shade values; deriving a certainty score expressing the certainty of the determined tooth shade value; and generating a visual representation of the certainty score and displaying this visual representation in a user interface, wherein the visual representation of the certainty score is at least one of a binary code, a bar structure with a color

gradient, a numerical value, and a comparison between the texture date and the known texture value of the determined tooth shade value".

Claim Rejections - 35 USC §103

3. The following is a quotation of 35 U.S.C. 103 which forms the basis for all obviousness rejections set forth in this Office action:

A patent for a claimed invention may not be obtained, notwithstanding that the claimed invention is not identically disclosed as set forth in section 102, if the differences between the claimed invention and the prior art are such that the claimed invention as a whole would have been obvious before the effective filing date of the claimed invention to a person having ordinary skill in the art to which the claimed invention pertains. Patentability shall not be negated by the manner in which the invention was made.

Claims 1-3, 10-13 are rejected under 35 U.S.C. 103 as being unpatentable over Quadling et al (US Patent 8532355), and further in view of Liag (US Patent 8570530).

With regard to claim 1, Quadling et al discloses obtaining a digital 3D representation of the tooth (refer to col. 2, lines 64-col. 3, lines 6), where the digital 3D representation comprises shape data and texture data for the tooth (refer to col. 2, lines 30-35); and (determining a tooth shade value) for at least one point on the tooth based on the texture data of the corresponding point of the digital 3D representation and on known texture values of one or more reference tooth shade values (refer to col. 15, lines 44-51). Quadling et al reference does not expressly call for determining a tooth shade value. However, at the same field of endeavor, Liag discloses this feature (refer to col. 3, lines 58-63). At the time of the invention, it would have been obvious to a person of ordinary skill in the art to incorporate the teaching to Liag image data processing system into Quadling et al system. The suggestion/motivation for doing so would have been to provide obtaining tooth shade information (refer to col. 3, lines 32-38 of Liag). Therefore, it would have been obvious to combine Liag with Quadling et al to obtain the invention as specified in claim 1.

With regard to claim 2, Quadling et al discloses wherein determining the tooth shade value for the point comprises selecting the reference tooth shade value with the known texture value closest to the texture data of the point (refer to col. 6, lines 44-51).

With regard to claim 3, Quadling et al discloses wherein determining the tooth shade value for the point comprises an interpolation of the two or more reference tooth shade values having known texture values close to the texture data of the point (refer to col. 16, lines 1 -31).

With regard to claim 10, Quadling et al discloses wherein the one or more reference tooth shade values relate to shade values for natural teeth with intact surface and/or to shade values for teeth prepared for a dental restoration (refer to col. 6, lines 44-51).

With regard to claim 11, Quadling et al failed to discloses comparing the texture data with known texture values for soft oral tissue, such as gum tissue and gingiva value. However, at the same field of endeavor, Liag discloses this feature (refer to col. 3, lines 58-63). At the time of the invention, it would have been obvious to a person of ordinary skill in the art to incorporate the teaching to Liag image data processing system into Quadling et al system. The suggestion/motivation for doing so would have been to provide obtaining tooth shade information (refer to col. 3, lines 32-38 of Liag). Therefore, it would have been obvious to combine Liag with Quadling et al to obtain the invention as specified in claim 11.

With regard to claim 12, Quadling et al discloses the texture information comprises at least one of tooth color or surface roughness (refer to col. 3, lines 49-53).

With regard to claim 13, Quadling et al discloses creating a shade profile for the tooth from shade values determined one or more points on the tooth (refer to 3, lines 49-53).

Allowable Subject Matter

4. Claims 4-9, 14-18 are objected to as being dependent upon a rejected base claim, but would be allowable if rewritten in independent form including all of the limitations of the base claim and any intervening claims.

Other Prior Art Cited

5. The prior art made of record and not relied upon is considered pertinent to applicant's disclosure.

US Patent No. (7296996), (7134874), (6471511) and (6450807).

Conclusion

6. Any inquiry concerning this communication or earlier communications from the examiner should be directed to YOSEF KASSA whose telephone number is (571) 272-7452. If attempts to reach the examiner by telephone are unsuccessful, examiner email address Yosef.kassa@uspto.gov. The examiner can normally be reached on Monday-Friday from 8:00 AM to 5:00 PM.

If attempts to reach the examiner by telephone and email are unsuccessful, the examiner's supervisor, Dwayne Bost can be reached on (571) 272-7023. The fax phone numbers for the organization where this application or proceeding is assigned is (571) 273-8300 for regular communication and (571) 273-8300 for after Final communications.

Any inquiry of a general nature or relating to the status of this application or proceeding should be directed to the customer service office whose telephone number is (571) 272-2600.

Information regarding the status of an application may be obtained from the Patent Application Information Retrieval (PAIR) system. Status information for published applications may be obtained from either Private PAIR or Public PAIR. Status information for unpublished applications is available through Private PAIR only.

For more information about the PAIR system, see http://pair-direct.uspto.gov. Should you have questions on access to the Private PAIR system, contact the Electronic Business Center (EBC) at 866-217-9197 (toll-free).

09/16/2019.

/YOSEF KASSA/

Primary Examiner, Art Unit 2669

Notice of References Cited	Application/Control No. 15/888,764	Applicant(s)/Patent Under Reexamination ESBECH et al.	
	Examiner YOSEF KASSA	Art Unit 2663	Page 1 of 1

U.S. PATENT DOCUMENTS

*		Document Number Country Code-Number-Kind Code	Date MM-YYYY	Name	CPC Classification	US Classification
*	A	US-8570530-B2	10-2013	Liang; Rongguang	A61B1/00009	356/601
*	B	US-8532355-B2	09-2013	Quadling; Mark	G06T15/04	382/128
*	C	US-7296996-B2	11-2007	Sachdeva; Rohit	A61C7/00	433/24
*	D	US-7134874-B2	11-2006	Chishti; Muhammad	A61C7/00	1/1
*	E	US-6471511-B1	10-2002	Chishti; Muhammad	A61C7/00	1/1
*	F	US-6450807-B1	09-2002	Chishti; Muhammad	A61C7/002	433/24
	G					
	H					
	I					
	J					
	K					
	L					
	M					

FOREIGN PATENT DOCUMENTS

*		Document Number Country Code-Number-Kind Code	Date MM-YYYY	Country	Name	CPC Classification
	N					
	O					
	P					
	Q					
	R					
	S					
	T					

NON-PATENT DOCUMENTS

*		Include as applicable: Author, Title Date, Publisher, Edition or Volume, Pertinent Pages)
	U	
	V	
	W	
	X	

*A copy of this reference is not being furnished with this Office action. (See MPEP § 707.05(a).)
Dates in MM-YYYY format are publication dates. Classifications may be US or foreign.

Search Notes	Application/Control No.	Applicant(s)/Patent Under Reexamination
	15/888,764	ESBECH et al.
	Examiner	**Art Unit**
	YOSEF KASSA	2663

CPC - Searched*		
Symbol	**Date**	**Examiner**
G06T17/00	09/16/2019	YK
G06T15/04	"	"
G06K2209/05	"	"
G06K2209/40	"	"

CPC Combination Sets - Searched*		
Symbol	**Date**	**Examiner**
G01J3/508	09/16/2019	YK
G01J3/528	"	"

US Classification - Searched*			
Class	**Subclass**	**Date**	**Examiner**
382	128, 164, 165, 167, 209, 278, 282	09/16/2019	YK
128	922, 823	"	"

* See search history printout included with this form or the SEARCH NOTES box below to determine the scope of the search.

Search Notes		
Search Notes	**Date**	**Examiner**
A61B5/0088	09/16/2019	YK
A61B5/4547	"	"

Interference Search			
US Class/CPC Symbol	**US Subclass/CPC Group**	**Date**	**Examiner**
	Text searched for claimed subject matter on EAST USPAT and PGPUB	09/16/2019	YK

/YOSEF KASSA/ Primary Examiner, Art Unit 2663	

UNITED STATES PATENT AND TRADEMARK OFFICE

UNITED STATES DEPARTMENT OF COMMERCE
United States Patent and Trademark Office
Address: COMMISSIONER FOR PATENTS
P.O. Box 1450
Alexandria, Virginia 22313-1450
www.uspto.gov

BIB DATA SHEET

CONFIRMATION NO. 3964

SERIAL NUMBER	FILING or 371(c) DATE	CLASS	GROUP ART UNIT	ATTORNEY DOCKET NO.
15/888,764	02/05/2018 RULE	382	2663	0079124-000162

APPLICANTS
3SHAPE A/S, Copenhagen K, DENMARK;

INVENTORS
Bo ESBECH, Gentofte, DENMARK;
Rune FISKER, Virum, DENMARK;
Lars HENRIKSEN, Bagsværd, DENMARK;
Tais CLAUSEN, Klagshamn, SWEDEN;

**** CONTINUING DATA ****************************
This application is a CON of 15/117,078 08/05/2016 PAT 10010387
which is a 371 of PCT/EP2015/052537 02/06/2015

**** FOREIGN APPLICATIONS *****************************
DENMARK PA 2014 70066 02/07/2014

**** IF REQUIRED, FOREIGN FILING LICENSE GRANTED ****
02/28/2018

Foreign Priority claimed ☑ Yes ☐ No 35 USC 119(a-d) conditions met ☑ Yes ☐ No Verified and Acknowledged /YOSEF KASSA/ Examiner's Signature	☐ Met after Allowance Initials	STATE OR COUNTRY	SHEETS DRAWINGS	TOTAL CLAIMS	INDEPENDENT CLAIMS
		DENMARK	9	18	1

ADDRESS
BUCHANAN, INGERSOLL & ROONEY PC
POST OFFICE BOX 1404
ALEXANDRIA, VA 22313-1404
UNITED STATES

TITLE
DETECTING TOOTH SHADE

FILING FEE RECEIVED		
1720	FEES: Authority has been given in Paper No._____ to charge/credit DEPOSIT ACCOUNT No._____ for following:	☐ All Fees ☐ 1.16 Fees (Filing) ☐ 1.17 Fees (Processing Ext. of time) ☐ 1.18 Fees (Issue) ☐ Other _____ ☐ Credit

BIB (Rev. 05/07).

IEEE.org | IEEE *Xplore* Digital Library | IEEE-SA | IEEE Spectrum | More Sites

Cart (0) | Create Account | Personal Sign In

Access provided by:
United States Patent and Trademark Office
Sign Out

Browse My Settings Get Help

Search within results

Download PDFs | Export | Alert Set Search Alerts | Search History

Showing 1-6 of 6 for ((("All Metadata":patient*) AND "All Metadata":tooth*) AND "All Metadata":shad*)

Conferences (6)

Filter Alert Set Search Alerts | sort: Sort Relevance

Show

- All Results
- My Subscribed Content
- Open Access

Year

Single Year | Range

2009 2018

From 2009 To 2018

Author

Affiliation

Publication Title

Publisher

Conference Location

Index Terms

Shape from shading for hybrid surfaces as applied to tooth reconstruction
Cambron N. Carter ; Rosario J. Pusateri ; Dongqing Chen ; Abdelreheim H. Ahmed ; Aly A. Farag
2010 IEEE International Conference on Image Processing
Year: 2010 | Conference Paper | Publisher: IEEE
Cited by: Papers (11)
Abstract (758 Kb)

Shape from shading for hybrid surfaces as applied to tooth reconstruction

Cambron N. Carter | Rosario J. Pusateri | Dongqing Chen | Abdelreheim H. Ahmed | Aly A. Farag
2010 IEEE International Conference on Image Processing
Year: 2010 | Conference Paper | Publisher: IEEE

Multi region tooth shade matching using standard tab colors
Jamal S. Rahhal ; Osama Abu-Hammad
2018 Advances in Science and Engineering Technology International Conferences (ASET)
Year: 2018 | Conference Paper | Publisher: IEEE
Abstract (267 Kb)

Multi region tooth shade matching using standard tab colors

Jamal S. Rahhal | Osama Abu-Hammad
2018 Advances in Science and Engineering Technology International Conferences (ASET)
Year: 2018 | Conference Paper | Publisher: IEEE

A Data Mining Approach Based on a Local-Global Fuzzy Modelling for Prediction of Color Change after Tooth Bleaching Using Vita Classical Shades
L.J. Herrera ; M.M. Pérez ; J. Santana ; R. Pulgar ; J. González ; H. Pomares ; I. Rojas
2009 Ninth International Conference on Intelligent Systems Design and Applications
Year: 2009 | Conference Paper | Publisher: IEEE
Abstract (402 Kb)

A Data Mining Approach Based on a Local-Global Fuzzy Modelling for Prediction of Color Change after Tooth Bleaching Using Vita Classical Shades

L.J. Herrera | M.M. Pérez | J. Santana | R. Pulgar | J. González | H. Pomares | I. Rojas
2009 Ninth International Conference on Intelligent Systems Design and Applications

Attorney Docket No. 0079124-000162

IN THE UNITED STATES PATENT AND TRADEMARK OFFICE

In re Patent Application of	)	
	)	
Bo ESBECH	)	Group Art Unit: Unassigned
	)	
Application No.: Unassigned	)	Confirmation No.:
	)	
Filed: On Even Date Herewith	)	
	)	
For: DETECTING TOOTH SHADE	)	
	)	

FIRST INFORMATION DISCLOSURE STATEMENT

Commissioner for Patents
P.O. Box 1450
Alexandria, VA 22313-1450

Commissioner:

In accordance with the duty of disclosure as set forth in 37 C.F.R. § 1.56, the accompanying information is being submitted in accordance with 37 C.F.R. §§ 1.97 and 1.98.

All of the documents cited on the accompanying citation form were previously made of record in prior application Serial No. 15/117,078 filed on August 6, 2016, upon which Applicants rely for the benefits provided in 35 U.S.C. § 120. In accordance with 37 C.F.R. § 1.98, a copy of each of the listed documents, except those documents which were previously made of record in the prior application, is enclosed.

To assist the Examiner, the documents are listed on the attached citation form. It is respectfully requested that an Examiner initialed copy of this form be returned to the undersigned.

Respectfully submitted,

BUCHANAN INGERSOLL & ROONEY PC

Date: 5 February 2018

By: /Travis D. Boone/
Travis D. Boone
Registration No. 52635

Customer Number 21839
703 836 6620

Buchanan Ingersoll & Rooney PC

***ALL REFERENCES CONSIDERED EXCEPT WHERE LINED THROUGH. /Y.K/

Substitute for PTO/SB/08a&b (07-09)
Approved for use through 07/31/2012. OMB 0651-0031
U.S. Patent and Trademark Office; U.S. DEPARTMENT OF COMMERCE
Under the Paperwork Reduction Act of 1995, no persons are required to respond to a collection of information unless it contains a valid OMB control number.

Substitute for form 1449/PTO				Complete if Known	
INFORMATION DISCLOSURE STATEMENT BY APPLICANT				*Application Number*	Unassigned 15/888,764
				Filing Date	On Even Date Herewith
				First Named Inventor	Bo ESBECH
(Use as many sheets as necessary)				*Art Unit*	Unassigned
				Examiner Name	Unassigned
Sheet	1	of	1	*Attorney Docket Number*	0079124-000162

U.S. PATENT DOCUMENTS

Examiner Initials'	Cite No.[1]	Document Number Number-Kind Code[2] *(if known)*	Publication Date MM-DD-YYYY	Name of Patentee or Applicant of Cited Document	Pages, Columns, Lines, Where Relevant Passages or Relevant Figures Appear
		US-2001/0030748 A1	10-18-2001	Jung et al.	
		US-2006/0127852 A1	06-15-2006	Wen	
		US-2007/0212667 A1	09-13-2007	Jung et al.	
		US-2009/0133260 A1	05-28-2009	Durbin et al.	
		US-2009/0233253 A1	09-17-2009	Mrazek	
		US-2011/0125304 A1	05-26-2011	Schneider et al. (corr. to EP 2325771 below)	
		US-2016/0067018 A1	03-10-2016	Korten et al. (corr. to EP 2799032 below)	
		US-2003/0156283 A1	08-21-2003	Jung et al. (corr. to WO 2003/073457 below)	
		US-2015/0054922 A1	02-26-2015	Fisker et al. (corr. to WO 2010/145669 below)	
		US-2013/0218530 A1	08-22-2013	Deichmann et al. (corr. to WO 2012/000511 below)	
		US-2013/0218531 A1	08-22-2013	Deichmann et al. (corr. to WO 2012/007003 below)	
		US-2014/0377718 A1	12-25-2014	Korten et al. (corr. to WO 2013/122662 below)	
		US-2016/0022389 A1	01-28-2016	Esbech et al. (corr. to WO 2014/125037 below)	
		US-8,570,530 B2	10-29-2013	Liang	
		US-8,532,355 B2	09-10-2013	Quadling et al.	
		US-8,144,954 B2	03-27-2012	Quadling et al.	
		US-8,121,718 B2	02-21-2012	Rubbert et al.	
		US-6,334,773 B1	01-01-2002	Ahlen et al.	
		US-6,081,739 A	06-27-2000	Lemchen	

FOREIGN PATENT DOCUMENTS

Examiner Initials'	Cite No.[1]	Foreign Patent Document Country Code[3] Number[4] Kind Code[5] *(if known)*	Publication Date MM-DD-YYYY	Name of Patentee or Applicant of Cited Document	Pages, Columns, Lines, Where Relevant Passages or Relevant Figures Appear	T[6]
		EP 2 325 771 A2	05-25-2011	SIRONA DENTAL SYSTEMS GMBH		
		EP 2 799 032 A1	11-05-2014	3M INNOVATIVE PROPERTIES CO		
		WO 2003/073457 A2	09-04-2003	LJ LAB LLC		
		WO 2006/065955 A2	06-22-2006	ORTHOCLEAR HOLDING INC		
		WO 2010/145669 A1	12-23-2010	3SHAPE AS		
		WO 2012/000511 A1	01-05-2012	3SHAPE AS		
		WO 2012/007003 A1	01-19-2012	3SHAPE AS		
		WO 2013/122662 A1	08-22-2013	3M INNOVATIVE PROPERTIES CO		
		WO 2014/125037 A1	08-21-2014	3SHAPE AS		

NON PATENT LITERATURE DOCUMENTS

Examiner Initials*	Cite No.[1]	Include name of the author (in CAPITAL LETTERS), title of the article (when appropriate), title of the item (book, magazine, journal, serial, symposium, catalog, etc.), date, page(s), volume-issue number(s), publisher, city and/or country where published.	T[2]
		International Search Report (PCT/ISA/210) mailed on May 11, 2015, by the European Patent Office as the International Searching Authority for International Application No. PCT/EP2015/052537.	
		Written Opinion (PCT/ISA/237) mailed on May 11, 2015, by the European Patent Office as the International Searching Authority for International Application No. PCT/EP2015/052537.	

Examiner Signature	/YOSEF KASSA/	Date Considered	09/16/2019

*EXAMINER: Initial if reference considered, whether or not citation is in conformance with MPEP 609. Draw line through citation if not in conformance and not considered. Include copy of this form with next communication to applicant. [1] Applicant's unique citation designation number (optional). [2] See Kinds Codes of USPTO Patent Documents at www.uspto.gov or MPEP 901.04. [3] Enter Office that issued the document, by the two-letter code (WIPO Standard ST.3). [4] For Japanese patent documents, the indication of the year of the reign of the Emperor must precede the serial number of the patent document. [5] Kind of document by the appropriate symbols as indicated on the document under WIPO Standard ST.16 if possible. [6] Applicant is to place a check mark here if English language Translation is attached.

ALL REFERENCES CONSIDERED EXCEPT WHERE LINED THROUGH. /Y.K/

PTO/SB/08a (01-10)
Approved for use through 07/31/2012. OMB 0651-0031
U.S. Patent and Trademark Office; U.S. DEPARTMENT OF COMMERCE
Under the Paperwork Reduction Act of 1995, no persons are required to respond to a collection of information unless it contains a valid OMB control number.

INFORMATION DISCLOSURE STATEMENT BY APPLICANT

(Not for submission under 37 CFR 1.99)

Application Number	15888764
Filing Date	2018-02-05
First Named Inventor	Bo ESBECH
Art Unit	2669
Examiner Name	KASSA, YOSEF
Attorney Docket Number	0079124-000162

U.S.PATENTS Remove

Examiner Initial*	Cite No	Patent Number	Kind Code[1]	Issue Date	Name of Patentee or Applicant of cited Document	Pages,Columns,Lines where Relevant Passages or Relevant Figures Appear
	1	8144954	B2	2012-03-27	Quadling et al.	
	2	7027642	B2	2006-04-11	Rubbert et al.	
	3	7296996	B2	2007-11-20	Sachdeva et al.	
	4	7355721	B2	2008-04-08	Quadling et al.	

If you wish to add additional U.S. Patent citation information please click the Add button. Add

U.S.PATENT APPLICATION PUBLICATIONS Remove

Examiner Initial*	Cite No	Publication Number	Kind Code[1]	Publication Date	Name of Patentee or Applicant of cited Document	Pages,Columns,Lines where Relevant Passages or Relevant Figures Appear
	1					

If you wish to add additional U.S. Published Application citation information please click the Add button. Add

FOREIGN PATENT DOCUMENTS Remove

Examiner Initial*	Cite No	Foreign Document Number[3]	Country Code[2] i	Kind Code[4]	Publication Date	Name of Patentee or Applicant of cited Document	Pages,Columns,Lines where Relevant Passages or Relevant Figures Appear	T[5]

ALL REFERENCES CONSIDERED EXCEPT WHERE LINED THROUGH. /Y.K/

INFORMATION DISCLOSURE STATEMENT BY APPLICANT (Not for submission under 37 CFR 1.99)	Application Number	15888764
	Filing Date	2018-02-05
	First Named Inventor	Bo ESBECH
	Art Unit	2669
	Examiner Name	KASSA, YOSEF
	Attorney Docket Number	0079124-000162

	1							

If you wish to add additional Foreign Patent Document citation information please click the Add button Add

NON-PATENT LITERATURE DOCUMENTS Remove

Examiner Initials*	Cite No	Include name of the author (in CAPITAL LETTERS), title of the article (when appropriate), title of the item (book, magazine, journal, serial, symposium, catalog, etc), date, pages(s), volume-issue number(s), publisher, city and/or country where published.	T[5]
	1	IEEE Xplore Search Results (4 pages), accessed March 2, 2018; this document was made of record by the Examiner on March 13, 2018, in the parent application (U.S. App. No. 15/117,078)	

If you wish to add additional non-patent literature document citation information please click the Add button Add

EXAMINER SIGNATURE

Examiner Signature	/YOSEF KASSA/	Date Considered	09/16/2019

*EXAMINER: Initial if reference considered, whether or not citation is in conformance with MPEP 609. Draw line through a citation if not in conformance and not considered. Include copy of this form with next communication to applicant.

[1] See Kind Codes of USPTO Patent Documents at www.USPTO.GOV or MPEP 901.04. [2] Enter office that issued the document, by the two-letter code (WIPO Standard ST.3). [3] For Japanese patent documents, the indication of the year of the reign of the Emperor must precede the serial number of the patent document. [4] Kind of document by the appropriate symbols as indicated on the document under WIPO Standard ST.16 if possible. [5] Applicant is to place a check mark here if English language translation is attached.

ALL REFERENCES CONSIDERED EXCEPT WHERE LINED THROUGH. /Y.K/

INFORMATION DISCLOSURE STATEMENT BY APPLICANT (Not for submission under 37 CFR 1.99)	Application Number	15888764
	Filing Date	2018-02-05
	First Named Inventor	Bo ESBECH
	Art Unit	2669
	Examiner Name	KASSA, YOSEF
	Attorney Docket Number	0079124-000162

CERTIFICATION STATEMENT

Please see 37 CFR 1.97 and 1.98 to make the appropriate selection(s):

That each item of information contained in the information disclosure statement was first cited in any communication from a foreign patent office in a counterpart foreign application not more than three months prior to the filing of the information disclosure statement. See 37 CFR 1.97(e)(1).

OR

☐ That no item of information contained in the information disclosure statement was cited in a communication from a foreign patent office in a counterpart foreign application, and, to the knowledge of the person signing the certification after making reasonable inquiry, no item of information contained in the information disclosure statement was known to any individual designated in 37 CFR 1.56(c) more than three months prior to the filing of the information disclosure statement. See 37 CFR 1.97(e)(2).

See attached certification statement.

The fee set forth in 37 CFR 1.17 (p) has been submitted herewith.

☒ A certification statement is not submitted herewith.

SIGNATURE

A signature of the applicant or representative is required in accordance with CFR 1.33, 10.18. Please see CFR 1.4(d) for the form of the signature.

Signature	/Travis D. Boone/	Date (YYYY-MM-DD)	2018-07-12
Name/Print	Travis D. Boone	Registration Number	52,635

This collection of information is required by 37 CFR 1.97 and 1.98. The information is required to obtain or retain a benefit by the public which is to file (and by the USPTO to process) an application. Confidentiality is governed by 35 U.S.C. 122 and 37 CFR 1.14. This collection is estimated to take 1 hour to complete, including gathering, preparing and submitting the completed application form to the USPTO. Time will vary depending upon the individual case. Any comments on the amount of time you require to complete this form and/or suggestions for reducing this burden, should be sent to the Chief Information Officer, U.S. Patent and Trademark Office, U.S. Department of Commerce, P.O. Box 1450, Alexandria, VA 22313-1450. DO NOT SEND FEES OR COMPLETED FORMS TO THIS ADDRESS. **SEND TO: Commissioner for Patents, P.O. Box 1450, Alexandria, VA 22313-1450.**

ALL REFERENCES CONSIDERED EXCEPT WHERE LINED THROUGH. /Y.K/

Privacy Act Statement

The Privacy Act of 1974 (P.L. 93-579) requires that you be given certain information in connection with your submission of the attached form related to a patent application or patent. Accordingly, pursuant to the requirements of the Act, please be advised that: (1) the general authority for the collection of this information is 35 U.S.C. 2(b)(2); (2) furnishing of the information solicited is voluntary; and (3) the principal purpose for which the information is used by the U.S. Patent and Trademark Office is to process and/or examine your submission related to a patent application or patent. If you do not furnish the requested information, the U.S. Patent and Trademark Office may not be able to process and/or examine your submission, which may result in termination of proceedings or abandonment of the application or expiration of the patent.

The information provided by you in this form will be subject to the following routine uses:

1. The information on this form will be treated confidentially to the extent allowed under the Freedom of Information Act (5 U.S.C. 552) and the Privacy Act (5 U.S.C. 552a). Records from this system of records may be disclosed to the Department of Justice to determine whether the Freedom of Information Act requires disclosure of these record s.

2. A record from this system of records may be disclosed, as a routine use, in the course of presenting evidence to a court, magistrate, or administrative tribunal, including disclosures to opposing counsel in the course of settlement negotiations.

3. A record in this system of records may be disclosed, as a routine use, to a Member of Congress submitting a request involving an individual, to whom the record pertains, when the individual has requested assistance from the Member with respect to the subject matter of the record.

4. A record in this system of records may be disclosed, as a routine use, to a contractor of the Agency having need for the information in order to perform a contract. Recipients of information shall be required to comply with the requirements of the Privacy Act of 1974, as amended, pursuant to 5 U.S.C. 552a(m).

5. A record related to an International Application filed under the Patent Cooperation Treaty in this system of records may be disclosed, as a routine use, to the International Bureau of the World Intellectual Property Organization, pursuant to the Patent Cooperation Treaty.

6. A record in this system of records may be disclosed, as a routine use, to another federal agency for purposes of National Security review (35 U.S.C. 181) and for review pursuant to the Atomic Energy Act (42 U.S.C. 218(c)).

7. A record from this system of records may be disclosed, as a routine use, to the Administrator, General Services, or his/her designee, during an inspection of records conducted by GSA as part of that agency's responsibility to recommend improvements in records management practices and programs, under authority of 44 U.S.C. 2904 and 2906. Such disclosure shall be made in accordance with the GSA regulations governing inspection of records for this purpose, and any other relevant (i.e., GSA or Commerce) directive. Such disclosure shall not be used to make determinations about individuals.

8. A record from this system of records may be disclosed, as a routine use, to the public after either publication of the application pursuant to 35 U.S.C. 122(b) or issuance of a patent pursuant to 35 U.S.C. 151. Further, a record may be disclosed, subject to the limitations of 37 CFR 1.14, as a routine use, to the public if the record was filed in an application which became abandoned or in which the proceedings were terminated and which application is referenced by either a published application, an application open to public inspections or an issued patent.

9. A record from this system of records may be disclosed, as a routine use, to a Federal, State, or local law enforcement agency, if the USPTO becomes aware of a violation or potential violation of law or regulation.

ALL REFERENCES CONSIDERED EXCEPT WHERE LINED THROUGH. /Y.K/

Doc Code: DIST.E.FILE Document Description: Electronic Terminal Disclaimer - Filed	PTO/SB/26 U.S. Patent and Trademark Office Department of Commerce

Electronic Petition Request	**TERMINAL DISCLAIMER TO OBVIATE A DOUBLE PATENTING REJECTION OVER A "PRIOR" PATENT**
Application Number	15888764
Filing Date	05-Feb-2018
First Named Inventor	Bo ESBECH
Attorney Docket Number	0079124-000162
Title of Invention	DETECTING TOOTH SHADE

☒ Filing of terminal disclaimer does not obviate requirement for response under 37 CFR 1.111 to outstanding Office Action

☒ This electronic Terminal Disclaimer is not being used for a Joint Research Agreement.

Owner	Percent Interest
3SHAPE A/S	100%

The owner(s) with percent interest listed above in the instant application hereby disclaims, except as provided below, the terminal part of the statutory term of any patent granted on the instant application which would extend beyond the expiration date of the full statutory term of prior patent number(s)

10010387

as the term of said prior patent is presently shortened by any terminal disclaimer. The owner hereby agrees that any patent so granted on the instant application shall be enforceable only for and during such period that it and the prior patent are commonly owned. This agreement runs with any patent granted on the instant application and is binding upon the grantee, its successors or assigns.

In making the above disclaimer, the owner does not disclaim the terminal part of the term of any patent granted on the instant application that would extend to the expiration date of the full statutory term of the prior patent, "as the term of said prior patent is presently shortened by any terminal disclaimer," in the event that said prior patent later:
- expires for failure to pay a maintenance fee;
- is held unenforceable;
- is found invalid by a court of competent jurisdiction;
- is statutorily disclaimed in whole or terminally disclaimed under 37 CFR 1.321;
- has all claims canceled by a reexamination certificate;
- is reissued; or
- is in any manner terminated prior to the expiration of its full statutory term as presently shortened by any terminal disclaimer.

◉ Terminal disclaimer fee under 37 CFR 1.20(d) is included with Electronic Terminal Disclaimer request.

○	I certify, in accordance with 37 CFR 1.4(d)(4), that the terminal disclaimer fee under 37 CFR 1.20(d) required for this terminal disclaimer has already been paid in the above-identified application.

Applicant claims the following fee status:

○ Small Entity

○ Micro Entity

◉ Regular Undiscounted

I hereby declare that all statements made herein of my own knowledge are true and that all statements made on information and belief are believed to be true; and further that these statements were made with the knowledge that willful false statements and the like so made are punishable by fine or imprisonment, or both, under Section 1001 of Title 18 of the United States Code and that such willful false statements may jeopardize the validity of the application or any patent issued thereon.

THIS PORTION MUST BE COMPLETED BY THE SIGNATORY OR SIGNATORIES

I certify, in accordance with 37 CFR 1.4(d)(4) that I am:

◉ An attorney or agent registered to practice before the Patent and Trademark Office who is of record in this application

Registration Number 52635

○ A sole inventor

○ A joint inventor; I certify that I am authorized to sign this submission on behalf of all of the inventors as evidenced by the power of attorney in the application

○ A joint inventor; all of whom are signing this request

Signature	/Travis D. Boone/
Name	Travis D. Boone

*Statement under 37 CFR 3.73(b) is required if terminal disclaimer is signed by the assignee (owner).
Form PTO/SB/96 may be used for making this certification. See MPEP § 324.

Electronic Patent Application Fee Transmittal

Application Number:	15888764
Filing Date:	05-Feb-2018
Title of Invention:	DETECTING TOOTH SHADE
First Named Inventor/Applicant Name:	Bo ESBECH
Filer:	Travis Dean Boone
Attorney Docket Number:	0079124-000162

Filed as Large Entity

Filing Fees for Utility under 35 USC 111(a)

Description	Fee Code	Quantity	Amount	Sub-Total in USD($)
Basic Filing:				
STATUTORY OR TERMINAL DISCLAIMER	1814	1	160	160
Pages:				
Claims:				
Miscellaneous-Filing:				
Petition:				
Patent-Appeals-and-Interference:				
Post-Allowance-and-Post-Issuance:				

Description	Fee Code	Quantity	Amount	Sub-Total in USD($)
Extension-of-Time:				
Miscellaneous:				
			Total in USD ($)	**160**

Doc Code: DISQ.E.FILE
Document Description: Electronic Terminal Disclaimer – Approved

Application No.: 15888764

Filing Date: 05-Feb-2018

Applicant/Patent under Reexamination: ESBECH

Electronic Terminal Disclaimer filed on December 16, 2019

☒ APPROVED

This patent is subject to a terminal disclaimer

☐ DISAPPROVED

Approved/Disapproved by: Electronic Terminal Disclaimer automatically approved by EFS-Web

U.S. Patent and Trademark Office

Electronic Acknowledgement Receipt	
EFS ID:	38033679
Application Number:	15888764
International Application Number:	
Confirmation Number:	3964
Title of Invention:	DETECTING TOOTH SHADE
First Named Inventor/Applicant Name:	Bo ESBECH
Customer Number:	21839
Filer:	Travis Dean Boone
Filer Authorized By:	
Attorney Docket Number:	0079124-000162
Receipt Date:	16-DEC-2019
Filing Date:	05-FEB-2018
Time Stamp:	06:41:46
Application Type:	Utility under 35 USC 111(a)

Payment information:

Submitted with Payment	yes
Payment Type	DA
Payment was successfully received in RAM	$160
RAM confirmation Number	E2019BF741431557
Deposit Account	024800
Authorized User	Travis Boone
The Director of the USPTO is hereby authorized to charge indicated fees and credit any overpayment as follows: 37 CFR 1.16 (National application filing, search, and examination fees) 37 CFR 1.17 (Patent application and reexamination processing fees)	

37 CFR 1.19 (Document supply fees)

37 CFR 1.20 (Post Issuance fees)

37 CFR 1.21 (Miscellaneous fees and charges)

File Listing:

Document Number	Document Description	File Name	File Size(Bytes)/ Message Digest	Multi Part /.zip	Pages (if appl.)
1	Terminal Disclaimer-Filed (Electronic)	eTerminal-Disclaimer.pdf	33326 627a6d4e5b298cb20071079859ab751407c277b6	no	2
Warnings:					
Information:					
2	Fee Worksheet (SB06)	fee-info.pdf	30094 abff5f7a4eed96a82d237548e8f0e22082afa6fd	no	2
Warnings:					
Information:					
		Total Files Size (in bytes):	63420		

This Acknowledgement Receipt evidences receipt on the noted date by the USPTO of the indicated documents, characterized by the applicant, and including page counts, where applicable. It serves as evidence of receipt similar to a Post Card, as described in MPEP 503.

New Applications Under 35 U.S.C. 111
If a new application is being filed and the application includes the necessary components for a filing date (see 37 CFR 1.53(b)-(d) and MPEP 506), a Filing Receipt (37 CFR 1.54) will be issued in due course and the date shown on this Acknowledgement Receipt will establish the filing date of the application.
National Stage of an International Application under 35 U.S.C. 371
If a timely submission to enter the national stage of an international application is compliant with the conditions of 35 U.S.C. 371 and other applicable requirements a Form PCT/DO/EO/903 indicating acceptance of the application as a national stage submission under 35 U.S.C. 371 will be issued in addition to the Filing Receipt, in due course.
New International Application Filed with the USPTO as a Receiving Office
If a new international application is being filed and the international application includes the necessary components for an international filing date (see PCT Article 11 and MPEP 1810), a Notification of the International Application Number and of the International Filing Date (Form PCT/RO/105) will be issued in due course, subject to prescriptions concerning national security, and the date shown on this Acknowledgement Receipt will establish the international filing date of the application.

PTO/SB/06 (09-11)
Approved for use through 1/31/2014. OMB 0651-0032
U.S. Patent and Trademark Office; U.S. DEPARTMENT OF COMMERCE
Under the Paperwork Reduction Act of 1995, no persons are required to respond to a collection of information unless it displays a valid OMB control number.

PATENT APPLICATION FEE DETERMINATION RECORD Substitute for Form PTO-875	Application or Docket Number 15/888,764	Filing Date 02/05/2018	☐ To be Mailed

ENTITY: ☑ LARGE ☐ SMALL ☐ MICRO

APPLICATION AS FILED - PART I

FOR	(Column 1) NUMBER FILED	(Column 2) NUMBER EXTRA		RATE ($)	FEE ($)
☐ BASIC FEE (37 CFR 1.16(a), (b), or (c))	N/A	N/A		N/A	
☐ SEARCH FEE (37 CFR 1.16(k), (i), or (m))	N/A	N/A		N/A	
☐ EXAMINATION FEE (37 CFR 1.16(o), (p), or (q))	N/A	N/A		N/A	
TOTAL CLAIMS (37 CFR 1.16(i))	minus 20 =	*		x $100 =	
INDEPENDENT CLAIMS (37 CFR 1.16(h))	minus 3 =	*		x $460 =	
☐ APPLICATION SIZE FEE (37 CFR 1.16(s))	If the specification and drawings exceed 100 sheets of paper, the application size fee due is $310 ($155 for small entity) for each additional 50 sheets or fraction thereof. See 35 U.S.C. 41(a)(1)(G) and 37 CFR 1.16(s).				
☐ MULTIPLE DEPENDENT CLAIM PRESENT (37 CFR 1.16(j))					
* If the difference in column 1 is less than zero, enter "0" in column 2.				TOTAL	

APPLICATION AS AMENDED - PART II

AMENDMENT		(Column 1) CLAIMS REMAINING AFTER AMENDMENT		(Column 2) HIGHEST NUMBER PREVIOUSLY PAID FOR	(Column 3) PRESENT EXTRA		RATE ($)	ADDITIONAL FEE ($)
	12/16/2019							
	Total (37 CFR 1.16(i))	* 17	Minus	** 20	= 0		x $100 =	0
	Independent (37 CFR 1.16(h))	* 3	Minus	*** 3	= 0		x $460 =	0
	☐ Application Size Fee (37 CFR 1.16(s))							
	☐ FIRST PRESENTATION OF MULTIPLE DEPENDENT CLAIM (37 CFR 1.16(j))							
							TOTAL ADD'L FEE	0

AMENDMENT		(Column 1) CLAIMS REMAINING AFTER AMENDMENT		(Column 2) HIGHEST NUMBER PREVIOUSLY PAID FOR	(Column 3) PRESENT EXTRA		RATE ($)	ADDITIONAL FEE ($)
	Total (37 CFR 1.16(i))	*	Minus	**	=		x $0 =	
	Independent (37 CFR 1.16(h))	*	Minus	***	=		x $0 =	
	☐ Application Size Fee (37 CFR 1.16(s))							
	☐ FIRST PRESENTATION OF MULTIPLE DEPENDENT CLAIM (37 CFR 1.16(j))							
							TOTAL ADD'L FEE	

* If the entry in column 1 is less than the entry in column 2, write "0" in column 3.	LIE
** If the "Highest Number Previously Paid For" IN THIS SPACE is less than 20, enter "20".	/ALLYSON PURNELL/
*** If the "Highest Number Previously Paid For" IN THIS SPACE is less than 3, enter "3".	
The "Highest Number Previously Paid For" (Total or Independent) is the highest number found in the appropriate box in column 1.	

This collection of information is required by 37 CFR 1.16. The information is required to obtain or retain a benefit by the public which is to file (and by the USPTO to process) an application. Confidentiality is governed by 35 U.S.C. 122 and 37 CFR 1.14. This collection is estimated to take 12 minutes to complete, including gathering, preparing, and submitting the completed application form to the USPTO. Time will vary depending upon the individual case. Any comments on the amount of time you require to complete this form and/or suggestions for reducing this burden, should be sent to the Chief Information Officer, U.S. Patent and Trademark Office, U.S. Department of Commerce, P.O. Box 1450, Alexandria, VA 22313-1450. DO NOT SEND FEES OR COMPLETED FORMS TO THIS ADDRESS. **SEND TO: Commissioner for Patents, P.O. Box 1450, Alexandria, VA 22313-1450.**

If you need assistance in completing the form, call 1-800-PTO-9199 and select option 2.

IN THE UNITED STATES PATENT AND TRADEMARK OFFICE

In re Patent Application of	)	Group Art Unit: 2663
Bo ESBECH	)	Examiner: Yosef KASSA
Application No.: 15/888,764	)	Confirmation No.: 3964
Filed: February 5, 2018	)	
For: DETECTING TOOTH SHADE	)	

AMENDMENT AND RESPONSE TO OFFICE ACTION

Commissioner for Patents
P.O. Box 1450
Alexandria, VA 22313-1450

Commissioner:

In response to the Non-Final Office Action dated September 20, 2019, Applicant submits the following Amendment and Remarks. This Response is believed to be timely with no extensions of time due. If further payment is required, kindly deduct the fee from Deposit Account No. 02-4800 in the name of Buchanan Ingersoll & Rooney PC.

Amendments to the claims are presented in the Listing of Claims and begin on page 2.

Remarks begin on page 7.

Electronic Acknowledgement Receipt

EFS ID:	38039918
Application Number:	15888764
International Application Number:	
Confirmation Number:	3964
Title of Invention:	DETECTING TOOTH SHADE
First Named Inventor/Applicant Name:	Bo ESBECH
Customer Number:	21839
Filer:	Travis Dean Boone/Denise Miles
Filer Authorized By:	Travis Dean Boone
Attorney Docket Number:	0079124-000162
Receipt Date:	16-DEC-2019
Filing Date:	05-FEB-2018
Time Stamp:	14:21:21
Application Type:	Utility under 35 USC 111(a)

Payment information:

Submitted with Payment	no

File Listing:

Document Number	Document Description	File Name	File Size(Bytes)/ Message Digest	Multi Part /.zip	Pages (if appl.)
1		Amendment_and_Response_to_OA_-_As_Filed_12162019.pdf	400380 6826099ae0dbb13b9c879216a8a4b4d0218b7101	yes	8

	Multipart Description/PDF files in .zip description		
	Document Description	**Start**	**End**
	Applicant Arguments/Remarks Made in an Amendment	7	8
	Claims	2	6
	Amendment/Req. Reconsideration-After Non-Final Reject	1	1
Warnings:			
Information:			
	Total Files Size (in bytes):	400380	

This Acknowledgement Receipt evidences receipt on the noted date by the USPTO of the indicated documents, characterized by the applicant, and including page counts, where applicable. It serves as evidence of receipt similar to a Post Card, as described in MPEP 503.

<u>New Applications Under 35 U.S.C. 111</u>
If a new application is being filed and the application includes the necessary components for a filing date (see 37 CFR 1.53(b)-(d) and MPEP 506), a Filing Receipt (37 CFR 1.54) will be issued in due course and the date shown on this Acknowledgement Receipt will establish the filing date of the application.
<u>National Stage of an International Application under 35 U.S.C. 371</u>
If a timely submission to enter the national stage of an international application is compliant with the conditions of 35 U.S.C. 371 and other applicable requirements a Form PCT/DO/EO/903 indicating acceptance of the application as a national stage submission under 35 U.S.C. 371 will be issued in addition to the Filing Receipt, in due course.
<u>New International Application Filed with the USPTO as a Receiving Office</u>
If a new international application is being filed and the international application includes the necessary components for an international filing date (see PCT Article 11 and MPEP 1810), a Notification of the International Application Number and of the International Filing Date (Form PCT/RO/105) will be issued in due course, subject to prescriptions concerning national security, and the date shown on this Acknowledgement Receipt will establish the international filing date of the application.

REMARKS

Upon entry of the foregoing amendment, claims 1-3 and 5-17 are pending, with claims 1, 14, and 15 being independent. Claim 1 is amended to incorporate the subject matter of claim 4, with claim 4 being cancelled. Claims 5 and 7-9 are amended to reflect the cancellation of claim 4. Claim 11 is amended to correct an editorial error. Claims 14 and 15 are amended to be placed into independent format.

No new matter is added and entry is respectfully requested.

Allowable Subject Matter

Applicant thanks the Examiner for stating that claims 4-9 and 14-18 are allowable.

As indicated above, claim 1 is amended to incorporate the allowable subject matter of claim 4 and allowable claims 14 and 15 are placed in independent form. Accordingly, all claims should now be allowable.

Double Patenting

Claims 1-18 stand rejected on the grounds of non-statutory obviousness-type double patenting as being unpatentable over claims 1-18 of U.S. 10,010,387. Without acquiescing to the rejection, a Terminal Disclaimer is submitted herewith rendering the rejection moot.

Rejections Under 35 U.S.C. § 103

Claims 1-3 and 10-13 were rejected under 35 U.S.C. § 103 as allegedly being unpatentable over Quadling (US 8,532,355) in view of Liag (US 8,570,530). Without acquiescing

to the rejections, claim 1 has been amended to incorporate the subject matter of allowable claim 4. Accordingly, the rejection is rendered moot.

Applicant traverses the rejection.

Conclusion

The Director is hereby authorized to charge any appropriate fees under 37 C.F.R. §§ 1.16, 1.17 and 1.20(d) and 1.21 that may be required by this paper, and to credit any overpayment, to Deposit Account No. 02-4800.

Should any questions arise in connection with this application, it is respectfully requested that the undersigned be contacted at the number indicated below.

Respectfully submitted,

BUCHANAN INGERSOLL & ROONEY PC

Date: 16 December 2019

By: /Travis D. Boone/
Travis D. Boone
Registration No. 52,635

Customer Number 21839
703.836.6620

AMENDMENTS TO THE CLAIMS:

This listing of claims will replace all prior versions, and listings, of claims in the application:

LISTING OF CLAIMS:

1. (Currently Amended) A method for determining shade of a patient's tooth, wherein the method comprises:

[[-]] obtaining a digital 3D representation of the tooth, where the digital 3D representation comprises shape data and texture data for the tooth; and

[[-]] determining a tooth shade value for at least one point on the tooth based on the texture data of the corresponding point of the digital 3D representation and on known texture values of one or more reference tooth shade values,

wherein the method comprises deriving a certainty score expressing the certainty of the determined tooth shade value.

2. (Original) The method according to claim 1, wherein determining the tooth shade value for the point comprises selecting the reference tooth shade value with the known texture value closest to the texture data of the point.

3. (Original) The method according to claim 1, wherein determining the tooth shade value for the point comprises an interpolation of the two or more reference tooth shade values having known texture values close to the texture data of the point.

4. (Cancelled)

5. (Currently Amended) The method according to claim [[4,]] 1, wherein the method comprises generating a visual representation of the certainty score and displaying this visual representation in a user interface.

6. (Original) The method according to claim 5, wherein the visual representation of the certainty score is displayed together with or is mapped onto the digital 3D representation of the tooth.

7. (Currently Amended) The method according to claim [[4,]] 1, wherein the method comprises comparing the derived certainty score with a range of acceptable certainty score values.

8. (Currently Amended) The method according to claim [[4,]] 1, wherein the certainty measure relates to how uniform the sub-scan texture information is at the point, and/or to how close the texture data is to the known texture value of the determined tooth shade value, and/or to the amount of texture information used to derive the texture data at the point.

9. (Currently Amended) The method according to claim [[4,]] 1, wherein the visual representation of the certainty score comprises a binary code, a bar structure with a color

gradient, a numerical value, and/or a comparison between the texture data and the known texture value of the determined tooth shade value.

10. (Original) The method according to claim 1, wherein the one or more reference tooth shade values relate to shade values for natural teeth with intact surface and/or to shade values for teeth prepared for a dental restoration.

11. (Currently Amended) The method according to claim [[1s,]] 1, wherein the method comprises comparing the texture data with known texture values for soft oral tissue, such as gum tissue and gingiva.

12. (Original) The method according to claim 1, wherein the texture information comprises at least one of tooth color or surface roughness.

13. (Original) The method according to claim 1, wherein the method comprises creating a shade profile for the tooth from shade values determined one or more points on the tooth.

14. (Currently Amended) ~~The method according to claim 13,~~ A method for determining shade of a patient's tooth, wherein the method comprises:

obtaining a digital 3D representation of the tooth, where the digital 3D representation comprises shape data and texture data for the tooth; and

determining a tooth shade value for at least one point on the tooth based on the texture data of the corresponding point of the digital 3D representation and on known texture values of one or more reference tooth shade values,

wherein the method comprises creating a shade profile for the tooth from shade values determined one or more points on the tooth,

wherein the tooth shade profile comprises a one or more tooth shade regions on the tooth surface where an average tooth shade is derived for each region from tooth shade values determined for a number of points within the region

15. (Currently Amended) ~~The method according to claim 1,~~ A method for determining shade of a patient's tooth, wherein the method comprises:

obtaining a digital 3D representation of the tooth, where the digital 3D representation comprises shape data and texture data for the tooth; and

determining a tooth shade value for at least one point on the tooth based on the texture data of the corresponding point of the digital 3D representation and on known texture values of one or more reference tooth shade values,

wherein obtaining the digital 3D representation of the tooth comprises recording a series of sub-scans of the tooth, where at least one of said sub-scans comprises both texture information and geometry information for said tooth, and generating the digital 3D representation of the tooth from the recorded series of sub-scans.

16. (Original) The method according to claim 15, wherein the texture data at least partly are derived by combining the texture information from corresponding parts of a number of the sub-scans.

17. (Original) The method according to claim 16, wherein combining the texture information from the sub-scans comprises interpolating the texture information and/or calculating an average value of the texture information.

18. (Original) The method according to claim 17, wherein the calculated average value is a weighted average of the texture information.

UNITED STATES PATENT AND TRADEMARK OFFICE

UNITED STATES DEPARTMENT OF COMMERCE
United States Patent and Trademark Office
Address: COMMISSIONER FOR PATENTS
P.O. Box 1450
Alexandria, Virginia 22313-1450
www.uspto.gov

NOTICE OF ALLOWANCE AND FEE(S) DUE

21839 7590 02/25/2020
BUCHANAN, INGERSOLL & ROONEY PC
POST OFFICE BOX 1404
ALEXANDRIA, VA 22313-1404

EXAMINER
KASSA, YOSEF

ART UNIT	PAPER NUMBER
2663	

DATE MAILED: 02/25/2020

APPLICATION NO.	FILING DATE	FIRST NAMED INVENTOR	ATTORNEY DOCKET NO.	CONFIRMATION NO.
15/888,764	02/05/2018	Bo ESBECH	0079124-000162	3964

TITLE OF INVENTION: DETECTING TOOTH SHADE

APPLN. TYPE	ENTITY STATUS	ISSUE FEE DUE	PUBLICATION FEE DUE	PREV. PAID ISSUE FEE	TOTAL FEE(S) DUE	DATE DUE
nonprovisional	UNDISCOUNTED	$1000	$0.00	$0.00	$1000	05/26/2020

THE APPLICATION IDENTIFIED ABOVE HAS BEEN EXAMINED AND IS ALLOWED FOR ISSUANCE AS A PATENT. PROSECUTION ON THE MERITS IS CLOSED. THIS NOTICE OF ALLOWANCE IS NOT A GRANT OF PATENT RIGHTS. THIS APPLICATION IS SUBJECT TO WITHDRAWAL FROM ISSUE AT THE INITIATIVE OF THE OFFICE OR UPON PETITION BY THE APPLICANT. SEE 37 CFR 1.313 AND MPEP 1308.

THE ISSUE FEE AND PUBLICATION FEE (IF REQUIRED) MUST BE PAID WITHIN THREE MONTHS FROM THE MAILING DATE OF THIS NOTICE OR THIS APPLICATION SHALL BE REGARDED AS ABANDONED. THIS STATUTORY PERIOD CANNOT BE EXTENDED. SEE 35 U.S.C. 151. THE ISSUE FEE DUE INDICATED ABOVE DOES NOT REFLECT A CREDIT FOR ANY PREVIOUSLY PAID ISSUE FEE IN THIS APPLICATION. IF AN ISSUE FEE HAS PREVIOUSLY BEEN PAID IN THIS APPLICATION (AS SHOWN ABOVE), THE RETURN OF PART B OF THIS FORM WILL BE CONSIDERED A REQUEST TO REAPPLY THE PREVIOUSLY PAID ISSUE FEE TOWARD THE ISSUE FEE NOW DUE.

HOW TO REPLY TO THIS NOTICE:

I. Review the ENTITY STATUS shown above. If the ENTITY STATUS is shown as SMALL or MICRO, verify whether entitlement to that entity status still applies.

If the ENTITY STATUS is the same as shown above, pay the TOTAL FEE(S) DUE shown above.

If the ENTITY STATUS is changed from that shown above, on PART B - FEE(S) TRANSMITTAL, complete section number 5 titled "Change in Entity Status (from status indicated above)".

For purposes of this notice, small entity fees are 1/2 the amount of undiscounted fees, and micro entity fees are 1/2 the amount of small entity fees.

II. PART B - FEE(S) TRANSMITTAL, or its equivalent, must be completed and returned to the United States Patent and Trademark Office (USPTO) with your ISSUE FEE and PUBLICATION FEE (if required). If you are charging the fee(s) to your deposit account, section "4b" of Part B - Fee(s) Transmittal should be completed and an extra copy of the form should be submitted. If an equivalent of Part B is filed, a request to reapply a previously paid issue fee must be clearly made, and delays in processing may occur due to the difficulty in recognizing the paper as an equivalent of Part B.

III. All communications regarding this application must give the application number. Please direct all communications prior to issuance to Mail Stop ISSUE FEE unless advised to the contrary.

IMPORTANT REMINDER: Maintenance fees are due in utility patents issuing on applications filed on or after Dec. 12, 1980. It is patentee's responsibility to ensure timely payment of maintenance fees when due. More information is available at www.uspto.gov/PatentMaintenanceFees.

PART B - FEE(S) TRANSMITTAL

Complete and send this form, together with applicable fee(s), by mail or fax, or via EFS-Web.

By mail, send to: Mail Stop ISSUE FEE
Commissioner for Patents
P.O. Box 1450
Alexandria, Virginia 22313-1450

By fax, send to: (571)-273-2885

INSTRUCTIONS: This form should be used for transmitting the ISSUE FEE and PUBLICATION FEE (if required). Blocks 1 through 5 should be completed where appropriate. All further correspondence including the Patent, advance orders and notification of maintenance fees will be mailed to the current correspondence address as indicated unless corrected below or directed otherwise in Block 1, by (a) specifying a new correspondence address; and/or (b) indicating a separate "FEE ADDRESS" for maintenance fee notifications.

CURRENT CORRESPONDENCE ADDRESS (Note: Use Block 1 for any change of address)

21839 7590 02/25/2020
BUCHANAN, INGERSOLL & ROONEY PC
POST OFFICE BOX 1404
ALEXANDRIA, VA 22313-1404

Note: A certificate of mailing can only be used for domestic mailings of the Fee(s) Transmittal. This certificate cannot be used for any other accompanying papers. Each additional paper, such as an assignment or formal drawing, must have its own certificate of mailing or transmission.

Certificate of Mailing or Transmission

I hereby certify that this Fee(s) Transmittal is being deposited with the United States Postal Service with sufficient postage for first class mail in an envelope addressed to the Mail Stop ISSUE FEE address above, or being transmitted to the USPTO via EFS-Web or by facsimile to (571) 273-2885, on the date below.

(Typed or printed name)

(Signature)

(Date)

APPLICATION NO.	FILING DATE	FIRST NAMED INVENTOR	ATTORNEY DOCKET NO.	CONFIRMATION NO.
15/888,764	02/05/2018	Bo ESBECH	0079124-000162	3964

TITLE OF INVENTION: DETECTING TOOTH SHADE

APPLN. TYPE	ENTITY STATUS	ISSUE FEE DUE	PUBLICATION FEE DUE	PREV. PAID ISSUE FEE	TOTAL FEE(S) DUE	DATE DUE
nonprovisional	UNDISCOUNTED	$1000	$0.00	$0.00	$1000	05/26/2020

EXAMINER	ART UNIT	CLASS-SUBCLASS
KASSA, YOSEF	2663	382-154000

1. Change of correspondence address or indication of "Fee Address" (37 CFR 1.363).

❑ Change of correspondence address (or Change of Correspondence Address form PTO/SB/122) attached.

❑ "Fee Address" indication (or "Fee Address" Indication form PTO/SB/47; Rev 03-09 or more recent) attached. **Use of a Customer Number is required.**

2. For printing on the patent front page, list
(1) The names of up to 3 registered patent attorneys or agents OR, alternatively,
(2) The name of a single firm (having as a member a registered attorney or agent) and the names of up to 2 registered patent attorneys or agents. If no name is listed, no name will be printed.

1_____
2_____
3_____

3. ASSIGNEE NAME AND RESIDENCE DATA TO BE PRINTED ON THE PATENT (print or type)

PLEASE NOTE: Unless an assignee is identified below, no assignee data will appear on the patent. If an assignee is identified below, the document must have been previously recorded, or filed for recordation, as set forth in 37 CFR 3.11 and 37 CFR 3.81(a). Completion of this form is NOT a substitute for filing an assignment.

(A) NAME OF ASSIGNEE (B) RESIDENCE: (CITY and STATE OR COUNTRY)

Please check the appropriate assignee category or categories (will not be printed on the patent) : ❑ Individual ❑ Corporation or other private group entity ❑ Government

4a. Fees submitted: ❑Issue Fee ❑Publication Fee (if required) ❑Advance Order - # of Copies _____

4b. Method of Payment: *(Please first reapply any previously paid fee shown above)*

❑ Electronic Payment via EFS-Web ❑ Enclosed check ❑ Non-electronic payment by credit card (Attach form PTO-2038)

❑ The Director is hereby authorized to charge the required fee(s), any deficiency, or credit any overpayment to Deposit Account No. _____

5. **Change in Entity Status** (from status indicated above)

❑ Applicant certifying micro entity status. See 37 CFR 1.29

❑ Applicant asserting small entity status. See 37 CFR 1.27

❑ Applicant changing to regular undiscounted fee status.

NOTE: Absent a valid certification of Micro Entity Status (see forms PTO/SB/15A and 15B), issue fee payment in the micro entity amount will not be accepted at the risk of application abandonment.
NOTE: If the application was previously under micro entity status, checking this box will be taken to be a notification of loss of entitlement to micro entity status.
NOTE: Checking this box will be taken to be a notification of loss of entitlement to small or micro entity status, as applicable.

NOTE: This form must be signed in accordance with 37 CFR 1.31 and 1.33. See 37 CFR 1.4 for signature requirements and certifications.

Authorized Signature _____ Date _____

Typed or printed name _____ Registration No. _____

UNITED STATES PATENT AND TRADEMARK OFFICE

UNITED STATES DEPARTMENT OF COMMERCE
United States Patent and Trademark Office
Address: COMMISSIONER FOR PATENTS
P.O. Box 1450
Alexandria, Virginia 22313-1450
www.uspto.gov

APPLICATION NO.	FILING DATE	FIRST NAMED INVENTOR	ATTORNEY DOCKET NO.	CONFIRMATION NO.
15/888,764	02/05/2018	Bo ESBECH	0079124-000162	3964

21839 7590 02/25/2020
BUCHANAN, INGERSOLL & ROONEY PC
POST OFFICE BOX 1404
ALEXANDRIA, VA 22313-1404

EXAMINER
KASSA, YOSEF

ART UNIT	PAPER NUMBER
2663	

DATE MAILED: 02/25/2020

Determination of Patent Term Adjustment under 35 U.S.C. 154 (b)
(Applications filed on or after May 29, 2000)

The Office has discontinued providing a Patent Term Adjustment (PTA) calculation with the Notice of Allowance.

Section 1(h)(2) of the AIA Technical Corrections Act amended 35 U.S.C. 154(b)(3)(B)(i) to eliminate the requirement that the Office provide a patent term adjustment determination with the notice of allowance. See Revisions to Patent Term Adjustment, 78 Fed. Reg. 19416, 19417 (Apr. 1, 2013). Therefore, the Office is no longer providing an initial patent term adjustment determination with the notice of allowance. The Office will continue to provide a patent term adjustment determination with the Issue Notification Letter that is mailed to applicant approximately three weeks prior to the issue date of the patent, and will include the patent term adjustment on the patent. Any request for reconsideration of the patent term adjustment determination (or reinstatement of patent term adjustment) should follow the process outlined in 37 CFR 1.705.

Any questions regarding the Patent Term Extension or Adjustment determination should be directed to the Office of Patent Legal Administration at (571)-272-7702. Questions relating to issue and publication fee payments should be directed to the Customer Service Center of the Office of Patent Publication at 1-(888)-786-0101 or (571)-272-4200.

OMB Clearance and PRA Burden Statement for PTOL-85 Part B

The Paperwork Reduction Act (PRA) of 1995 requires Federal agencies to obtain Office of Management and Budget approval before requesting most types of information from the public. When OMB approves an agency request to collect information from the public, OMB (i) provides a valid OMB Control Number and expiration date for the agency to display on the instrument that will be used to collect the information and (ii) requires the agency to inform the public about the OMB Control Number's legal significance in accordance with 5 CFR 1320.5(b).

The information collected by PTOL-85 Part B is required by 37 CFR 1.311. The information is required to obtain or retain a benefit by the public which is to file (and by the USPTO to process) an application. Confidentiality is governed by 35 U.S.C. 122 and 37 CFR 1.14. This collection is estimated to take 30 minutes to complete, including gathering, preparing, and submitting the completed application form to the USPTO. Time will vary depending upon the individual case. Any comments on the amount of time you require to complete this form and/or suggestions for reducing this burden, should be sent to the Chief Information Officer, U.S. Patent and Trademark Office, U.S. Department of Commerce, P.O. Box 1450, Alexandria, Virginia 22313-1450. DO NOT SEND FEES OR COMPLETED FORMS TO THIS ADDRESS. SEND TO: Commissioner for Patents, P.O. Box 1450, Alexandria, Virginia 22313-1450. Under the Paperwork Reduction Act of 1995, no persons are required to respond to a collection of information unless it displays a valid OMB control number.

Privacy Act Statement

The Privacy Act of 1974 (P.L. 93-579) requires that you be given certain information in connection with your submission of the attached form related to a patent application or patent. Accordingly, pursuant to the requirements of the Act, please be advised that: (1) the general authority for the collection of this information is 35 U.S.C. 2(b)(2); (2) furnishing of the information solicited is voluntary; and (3) the principal purpose for which the information is used by the U.S. Patent and Trademark Office is to process and/or examine your submission related to a patent application or patent. If you do not furnish the requested information, the U.S. Patent and Trademark Office may not be able to process and/or examine your submission, which may result in termination of proceedings or abandonment of the application or expiration of the patent.

The information provided by you in this form will be subject to the following routine uses:

1. The information on this form will be treated confidentially to the extent allowed under the Freedom of Information Act (5 U.S.C. 552) and the Privacy Act (5 U.S.C 552a). Records from this system of records may be disclosed to the Department of Justice to determine whether disclosure of these records is required by the Freedom of Information Act.
2. A record from this system of records may be disclosed, as a routine use, in the course of presenting evidence to a court, magistrate, or administrative tribunal, including disclosures to opposing counsel in the course of settlement negotiations.
3. A record in this system of records may be disclosed, as a routine use, to a Member of Congress submitting a request involving an individual, to whom the record pertains, when the individual has requested assistance from the Member with respect to the subject matter of the record.
4. A record in this system of records may be disclosed, as a routine use, to a contractor of the Agency having need for the information in order to perform a contract. Recipients of information shall be required to comply with the requirements of the Privacy Act of 1974, as amended, pursuant to 5 U.S.C. 552a(m).
5. A record related to an International Application filed under the Patent Cooperation Treaty in this system of records may be disclosed, as a routine use, to the International Bureau of the World Intellectual Property Organization, pursuant to the Patent Cooperation Treaty.
6. A record in this system of records may be disclosed, as a routine use, to another federal agency for purposes of National Security review (35 U.S.C. 181) and for review pursuant to the Atomic Energy Act (42 U.S.C. 218(c)).
7. A record from this system of records may be disclosed, as a routine use, to the Administrator, General Services, or his/her designee, during an inspection of records conducted by GSA as part of that agency's responsibility to recommend improvements in records management practices and programs, under authority of 44 U.S.C. 2904 and 2906. Such disclosure shall be made in accordance with the GSA regulations governing inspection of records for this purpose, and any other relevant (i.e., GSA or Commerce) directive. Such disclosure shall not be used to make determinations about individuals.
8. A record from this system of records may be disclosed, as a routine use, to the public after either publication of the application pursuant to 35 U.S.C. 122(b) or issuance of a patent pursuant to 35 U.S.C. 151. Further, a record may be disclosed, subject to the limitations of 37 CFR 1.14, as a routine use, to the public if the record was filed in an application which became abandoned or in which the proceedings were terminated and which application is referenced by either a published application, an application open to public inspection or an issued patent.
9. A record from this system of records may be disclosed, as a routine use, to a Federal, State, or local law enforcement agency, if the USPTO becomes aware of a violation or potential violation of law or regulation.

Notice of Allowability	Application No. 15/888,764	Applicant(s) ESBECH et al.	
	Examiner YOSEF KASSA	Art Unit 2663	AIA (FITF) Status Yes

-- The MAILING DATE of this communication appears on the cover sheet with the correspondence address--

All claims being allowable, PROSECUTION ON THE MERITS IS (OR REMAINS) CLOSED in this application. If not included herewith (or previously mailed), a Notice of Allowance (PTOL-85) or other appropriate communication will be mailed in due course. **THIS NOTICE OF ALLOWABILITY IS NOT A GRANT OF PATENT RIGHTS.** This application is subject to withdrawal from issue at the initiative of the Office or upon petition by the applicant. See 37 CFR 1.313 and MPEP 1308.

1. ☑ This communication is responsive to an amendment filed on 12/16/2019.
   ☐ A declaration(s)/affidavit(s) under **37 CFR 1.130(b)** was/were filed on _____.

2. ☐ An election was made by the applicant in response to a restriction requirement set forth during the interview on _____; the restriction requirement and election have been incorporated into this action.

3. ☑ The allowed claim(s) is/are 1-3 and 5-18 . As a result of the allowed claim(s), you may be eligible to benefit from the **Patent Prosecution Highway** program at a participating intellectual property office for the corresponding application. For more information , please see **http://www.uspto.gov/patents/init_events/pph/index.jsp** or send an inquiry to **PPHfeedback@uspto.gov.**

4. ☑ Acknowledgment is made of a claim for foreign priority under 35 U.S.C. § 119(a)-(d) or (f).

   Certified copies:

   a) ☑ All b) ☐ Some *c) ☐ None of the:

   1. ☑ Certified copies of the priority documents have been received.
   2. ☐ Certified copies of the priority documents have been received in Application No. _____ .
   3. ☐ Copies of the certified copies of the priority documents have been received in this national stage application from the International Bureau (PCT Rule 17.2(a)).

   * Certified copies not received: _____ .

Applicant has THREE MONTHS FROM THE "MAILING DATE" of this communication to file a reply complying with the requirements noted below. Failure to timely comply will result in ABANDONMENT of this application.
THIS THREE-MONTH PERIOD IS NOT EXTENDABLE.

5. ☐ CORRECTED DRAWINGS (as "replacement sheets") must be submitted.
   ☐ including changes required by the attached Examiner's Amendment / Comment or in the Office action of Paper No./Mail Date _____ .

   Identifying indicia such as the application number (see 37 CFR 1.84(c)) should be written on the drawings in the front (not the back) of each sheet. Replacement sheet(s) should be labeled as such in the header according to 37 CFR 1.121(d).

6. ☐ DEPOSIT OF and/or INFORMATION about the deposit of BIOLOGICAL MATERIAL must be submitted. Note the attached Examiner's comment regarding REQUIREMENT FOR THE DEPOSIT OF BIOLOGICAL MATERIAL.

Attachment(s)

1. ☑ Notice of References Cited (PTO-892)
2. ☐ Information Disclosure Statements (PTO/SB/08), Paper No./Mail Date _____.
3. ☐ Examiner's Comment Regarding Requirement for Deposit of Biological Material _____.
4. ☐ Interview Summary (PTO-413), Paper No./Mail Date. _____.
5. ☐ Examiner's Amendment/Comment
6. ☑ Examiner's Statement of Reasons for Allowance
7. ☐ Other _____.

/YOSEF KASSA/
Primary Examiner, Art Unit 2663

Notice of Pre-AIA or AIA Status

The present application, filed on or after March 16, 2013, is being examined under the first inventor to file provisions of the AIA.

Reasons for Allowance

1. Based on applicant's amendment/persuasive arguments filed on 12/18/2018, the art rejection for claims 1-3, 5-18 has been withdrawn. Therefore, claims 1-3, 5-18 are allowable. Any comments considered necessary by applicant must be submitted no later than the payment of the issue fee and, to avoid processing delays, should preferably accompany the issue fee. Such submissions should be clearly labeled "Comments on Statement of Reasons for Allowance."

Other Prior Art Cited

2. The prior art made of record and not relied upon is considered pertinent to applicant's disclosure.

US Patent No. (8614676), (8335353), (8063889) and (7550707).

Conclusion

3. Any inquiry concerning this communication or earlier communications from the examiner should be directed to YOSEF KASSA whose telephone number is (571) 272-7452. If attempts to reach the examiner by telephone are unsuccessful, examiner email address Yosef.kassa@uspto.gov. The examiner can normally be reached on Monday-Friday from 8:00 AM to 5:00 PM.

If attempts to reach the examiner by telephone and email are unsuccessful, the examiner's supervisor, Dwayne Bost can be reached on (571) 272-7023. The fax phone numbers for the organization where this application or proceeding is assigned is (571) 273-8300 for regular communication and (571) 273-8300 for after Final communications.

Any inquiry of a general nature or relating to the status of this application or proceeding should be directed to the customer service office whose telephone number is (571) 272-2600.

Information regarding the status of an application may be obtained from the Patent Application Information Retrieval (PAIR) system. Status information for published applications may be obtained from either Private PAIR or Public PAIR. Status information for unpublished applications is available through Private PAIR only.

For more information about the PAIR system, see http://pair-direct.uspto.gov. Should you have questions on access to the Private PAIR system, contact the Electronic Business Center (EBC) at 866-217-9197 (toll-free).

02/19/2020.

/YOSEF KASSA/

Primary Examiner, Art Unit 2669

Notice of References Cited	Application/Control No. 15/888,764	Applicant(s)/Patent Under Reexamination ESBECH et al.	
	Examiner YOSEF KASSA	Art Unit 2663	Page 1 of 1

U.S. PATENT DOCUMENTS

*		Document Number Country Code-Number-Kind Code	Date MM-YYYY	Name	CPC Classification	US Classification
*	A	US-8331653-B2	12-2012	Seki; Akihito	G06T7/74	382/103
*	B	US-8180100-B2	05-2012	Fujimaki; Tomo	G06T7/593	382/100
*	C	US-7636455-B2	12-2009	Keaton; Patricia A.	G06K9/0063	348/118
*	D	US-6954550-B2	10-2005	Fujieda; Shiro	G06T7/0004	382/180
	E					
	F					
	G					
	H					
	I					
	J					
	K					
	L					
	M					

FOREIGN PATENT DOCUMENTS

*		Document Number Country Code-Number-Kind Code	Date MM-YYYY	Country	Name	CPC Classification
	N					
	O					
	P					
	Q					
	R					
	S					
	T					

NON-PATENT DOCUMENTS

*		Include as applicable: Author, Title Date, Publisher, Edition or Volume, Pertinent Pages)
	U	
	V	
	W	
	X	

*A copy of this reference is not being furnished with this Office action. (See MPEP § 707.05(a).)
Dates in MM-YYYY format are publication dates. Classifications may be US or foreign.

Issue Classification	Application/Control No.	Applicant(s)/Patent Under Reexamination
	15/888,764	ESBECH et al.
	Examiner	**Art Unit**
	YOSEF KASSA	2663

CPC						
Symbol					**Type**	**Version**
A61C	/	13	/	082	F	2013-01-01
G01J	/	3	/	508	I	2013-01-01
G01J	/	3	/	504	I	2013-01-01
G16H	/	50	/	50	A	2018-01-01
G16H	/	20	/	40	A	2018-01-01

CPC Combination Sets								
Symbol					**Type**	**Set**	**Ranking**	**Version**
	/		/					

NONE (Assistant Examiner)	(Date)	**Total Claims Allowed:** 17	
/YOSEF KASSA/ Primary Examiner, Art Unit 2663 (Primary Examiner)	19 February 2020 (Date)	O.G. Print Claim(s) 1	O.G. Print Figure 1

U.S. Patent and Trademark Office

Part of Paper No.: 20200218

Issue Classification	Application/Control No.	Applicant(s)/Patent Under Reexamination
	15/888,764	ESBECH et al.
	Examiner	**Art Unit**
	YOSEF KASSA	2663

INTERNATIONAL CLASSIFICATION				
CLAIMED				
A61C13/08	/	13	/	08
G01J3/50	/	3	/	50
G16H50/50	/	50	/	50
G16H20/40	/	20	/	40

NON-CLAIMED				
	/		/	

US ORIGINAL CLASSIFICATION	
CLASS	**SUBCLASS**

CROSS REFERENCES(S)						
CLASS	**SUBCLASS (ONE SUBCLASS PER BLOCK)**					

NONE (Assistant Examiner)	(Date)	**Total Claims Allowed:** 17	
/YOSEF KASSA/ Primary Examiner, Art Unit 2663 (Primary Examiner)	19 February 2020 (Date)	O.G. Print Claim(s) 1	O.G. Print Figure 1

U.S. Patent and Trademark Office

Part of Paper No.: 20200218

Issue Classification	Application/Control No.	Applicant(s)/Patent Under Reexamination
	15/888,764	ESBECH et al.
	Examiner	**Art Unit**
	YOSEF KASSA	2663

☐ Claims renumbered in the same order as presented by applicant ☐ CPA ☐ T.D. ☐ R.1.47

CLAIMS

Final	Original	Final	Original	Final	Original	Final	Original	Final	Original	Final	Original	Final	Original	Final	Original
1	1	9	10												
2	2	10	11												
3	3	11	12												
	4	12	13												
4	5	13	14												
5	6	14	15												
6	7	15	16												
7	8	16	17												
8	9	17	18												

NONE (Assistant Examiner)	(Date)	**Total Claims Allowed:** 17	
/YOSEF KASSA/ Primary Examiner, Art Unit 2663 (Primary Examiner)	19 February 2020 (Date)	O.G. Print Claim(s) 1	O.G. Print Figure 1

U.S. Patent and Trademark Office Part of Paper No.: 20200218

Search Notes	Application/Control No.	Applicant(s)/Patent Under Reexamination
	15/888,764	ESBECH et al.
	Examiner	**Art Unit**
	YOSEF KASSA	2663

CPC - Searched*		
Symbol	**Date**	**Examiner**
G06T17/00	02/19/2020	YK
G06T15/04	"	"
G06K2209/05	"	"
G06K2209/40	"	"

CPC Combination Sets - Searched*		
Symbol	**Date**	**Examiner**
G01J3/508	02/19/2020	YK
G01J3/528	"	"

US Classification - Searched*			
Class	**Subclass**	**Date**	**Examiner**
382	128, 164, 165, 167, 209, 278, 282	02/19/2020	YK
128	922, 823	"	"

* See search history printout included with this form or the SEARCH NOTES box below to determine the scope of the search.

Search Notes		
Search Notes	**Date**	**Examiner**
A61B5/0088	02/19/2020	YK
A61B5/4547	"	"

/YOSEF KASSA/ Primary Examiner, Art Unit 2663	

Search Notes	Application/Control No.	Applicant(s)/Patent Under Reexamination
	15/888,764	ESBECH et al.
	Examiner	**Art Unit**
	YOSEF KASSA	2663

Interference Search			
US Class/CPC Symbol	**US Subclass/CPC Group**	**Date**	**Examiner**
	Text searched for claimed subject matter on EAST USPAT and PGPUB	02/19/2020	YK

/YOSEF KASSA/ Primary Examiner, Art Unit 2663	

UNITED STATES PATENT AND TRADEMARK OFFICE

UNITED STATES DEPARTMENT OF COMMERCE
United States Patent and Trademark Office
Address: COMMISSIONER FOR PATENTS
P.O. Box 1450
Alexandria, Virginia 22313-1450
www.uspto.gov

BIB DATA SHEET

CONFIRMATION NO. 3964

SERIAL NUMBER	FILING or 371(c) DATE	CLASS	GROUP ART UNIT	ATTORNEY DOCKET NO.
15/888,764	02/05/2018 **RULE**	382	2663	0079124-000162

APPLICANTS
3SHAPE A/S, Copenhagen K, DENMARK;

INVENTORS
Bo ESBECH, Gentofte, DENMARK;
Rune FISKER, Virum, DENMARK;
Lars HENRIKSEN, Bagsværd, DENMARK;
Tais CLAUSEN, Klagshamn, SWEDEN;

**** CONTINUING DATA ****************************
This application is a CON of 15/117,078 08/05/2016 PAT 10010387
which is a 371 of PCT/EP2015/052537 02/06/2015

**** FOREIGN APPLICATIONS *****************************
DENMARK PA 2014 70066 02/07/2014

**** IF REQUIRED, FOREIGN FILING LICENSE GRANTED ****
02/28/2018

Foreign Priority claimed ☑ Yes ☐ No 35 USC 119(a-d) conditions met ☑ Yes ☐ No Verified and Acknowledged /YOSEF KASSA/ Examiner's Signature	☐ Met after Allowance Initials	STATE OR COUNTRY	SHEETS DRAWINGS	TOTAL CLAIMS	INDEPENDENT CLAIMS
		DENMARK	9	18	1

ADDRESS
BUCHANAN, INGERSOLL & ROONEY PC
POST OFFICE BOX 1404
ALEXANDRIA, VA 22313-1404
UNITED STATES

TITLE
DETECTING TOOTH SHADE

FILING FEE RECEIVED		
1720	FEES: Authority has been given in Paper No._____ to charge/credit DEPOSIT ACCOUNT No._____ for following:	☐ All Fees ☐ 1.16 Fees (Filing) ☐ 1.17 Fees (Processing Ext. of time) ☐ 1.18 Fees (Issue) ☐ Other _____ ☐ Credit

BIB (Rev. 05/07).

IEEE.org | IEEE *Xplore* Digital Library | IEEE-SA | IEEE Spectrum | More Sites

Cart | Create Account | Personal Sign In

Access provided by:
United States Patent and Trademark Office
Sign Out

Browse My Settings Get Help

Search within results Download PDFs | Per Page: Per Page 25 | Export | Alert Set Search Alerts | Search History

Showing 1-23 of 23 for (((“All Metadata”:tooth*) AND “All Metadata”:color*) AND “All Metadata”:detect*)

Filters Applied: 1872 - 2020

Conferences (18) Courses (4) Journals (1)

Filter Alert Set Search Alerts | sort: Sort Relevance

Show

All Results

My Subscribed Content

Open Access

Year

Single Year | Range

2009 2019

From 2009 To 2019

Author

Affiliation

Publication Title

Publisher

Supplemental Items

Conference Location

Index Terms

Removal of specular reflections in tooth color image by perceptron neural nets
Seong-Taek Lee ; Tae-Ho Yoon ; Kyeong-Seop Kim ; Kee-Deog Kim ; Wonse Park
2010 2nd International Conference on Signal Processing Systems
Year: 2010 | Volume: 1 | Conference Paper
Cited by: Papers (3)
Abstract (629 Kb)

Removal of specular reflections in tooth color image by perceptron neural nets

Seong-Taek Lee | Tae-Ho Yoon | Kyeong-Seop Kim | Kee-Deog Kim | Wonse Park
2010 2nd International Conference on Signal Processing Systems
Year: 2010 | Volume: 1 | Conference Paper

An automated dental caries detection and scoring system for optical images of tooth occlusal surface
Leila Ghaedi ; Riki Gottlieb ; David C. Sarrett ; Amid Ismail ; Ashwin Belle ; Kayvan Najarian ; Rosalyn Hobson Hargraves
2014 36th Annual International Conference of the IEEE Engineering in Medicine and Biology Society
Year: 2014 | Conference Paper
Cited by: Papers (7)
Abstract (705 Kb)

An automated dental caries detection and scoring system for optical images of tooth occlusal surface

Leila Ghaedi | Riki Gottlieb | David C. Sarrett | Amid Ismail | Ashwin Belle | Kayvan Najarian | Rosalyn Hobson Hargraves
2014 36th Annual International Conference of the IEEE Engineering in Medicine and Biology Society
Year: 2014 | Conference Paper

The improvement of the tooth-marked recognition method on the tongue images
Huanhuan Li ; Xinfeng Zhang ; Guangqin Hu ; Yanling Sun
2013 ICME International Conference on Complex Medical Engineering
Year: 2013 | Conference Paper
Cited by: Papers (1)
Abstract (386 Kb)

The improvement of the tooth-marked recognition method on the tongue images

Huanhuan Li | Xinfeng Zhang | Guangqin Hu | Yanling Sun

EAST Search History

EAST Search History (Prior Art)

Ref #	Hits	Search Query	DBs	Default Operator	Plurals	Time Stamp
S1	0	("(edg$3andextract$3andgradient$3andvector$2andlin$2andpoint$2).clm."). PN.	US-PGPUB; USPAT	OR	OFF	2018/03/02 14:14
S2	67	(edg$3 and extract$3 and gradient$3 and vector$2 and lin$2 and point$2).clm.	US-PGPUB; USPAT	OR	OFF	2018/03/02 14:14
S3	870	(camera$3 or scan$4 or detect$6 or captur$4 or extract$4 or read$4 or vision$3)same(edg$4 near10 vector$2)same(gradient$2)	US-PGPUB; USPAT; USOCR; FPRS; EPO; JPO; DERWENT; IBM_TDB	OR	OFF	2018/03/02 14:33
S4	214	S3 same(edg$3 near10 point$3)	US-PGPUB; USPAT; USOCR; FPRS; EPO; JPO; DERWENT; IBM_TDB	OR	OFF	2018/03/02 14:34
S5	27	S4 same((lin$2 near10 edg$3)near10 point$3)	US-PGPUB; USPAT; USOCR; FPRS; EPO; JPO; DERWENT; IBM_TDB	OR	OFF	2018/03/02 14:35
S6	1	(vision$2 and lin$2 and edg$2 and extract$3 and gradient$3 and vector$2 and project$4 and point$2).clm.	US-PGPUB; USPAT; USOCR; FPRS; EPO; JPO; DERWENT; IBM_TDB	OR	OFF	2018/03/03 06:48
S7	870	(camera$3 or scan$4 or detect$6 or captur$4 or extract$4 or read$4 or vision$3)same(edg$4 near10 vector$2)same(gradient$2)	US-PGPUB; USPAT; USOCR; FPRS; EPO; JPO; DERWENT; IBM_TDB	OR	OFF	2018/03/03 06:48
S8	214	S7 same(edg$3 near10 point$3)	US-PGPUB; USPAT; USOCR; FPRS; EPO; JPO; DERWENT; IBM_TDB	OR	OFF	2018/03/03 06:48
S9	27	S8 same((lin$2 near10 edg$3)near10 point$3)	US-PGPUB; USPAT; USOCR; FPRS; EPO; JPO; DERWENT; IBM_TDB	OR	OFF	2018/03/03 06:48
S10	67	(edg$3 and extract$3 and gradient$3 and vector$2 and lin$2 and point$2).clm.	US-PGPUB; USPAT	OR	OFF	2018/03/03 06:49
S11	26	S10 AND ((G06T7/11 OR G06T7/73 OR G06T7/0012 OR G06T7/12 OR G06T7/579 OR G06T2207/20224 OR G06T7/13 OR G06T7/20 OR G06T11/003 OR G06K9/4671 OR G06K9/4604 OR G06K2009/3291 OR G06K9/00268 OR G06K9/00744 OR G06K9/46 OR G06K9/48 OR G06K9/482).CPC.)	US-PGPUB; USPAT	OR	OFF	2018/03/03 06:54

S12	1	15/338,445	US-PGPUB; USPAT	OR	OFF	2018/03/03 07:51
S13	900	(camera$3 or scan$4 or detect$6 or captur$4 or extract$4 or read$4 or vision$3)same(edg$4 near10 vector$2)same(gradient$2)	US-PGPUB; USPAT; USOCR; FPRS; EPO; JPO; DERWENT; IBM_TDB	OR	OFF	2018/08/04 10:44
S14	221	S13 same(edg$3 near10 point$3)	US-PGPUB; USPAT; USOCR; FPRS; EPO; JPO; DERWENT; IBM_TDB	OR	OFF	2018/08/04 10:44
S15	27	S14 same((lin$2 near10 edg$3)near10 point$3)	US-PGPUB; USPAT; USOCR; FPRS; EPO; JPO; DERWENT; IBM_TDB	OR	OFF	2018/08/04 10:44
S16	900	(camera$3 or scan$4 or detect$6 or captur$4 or extract$4 or read$4 or vision$3)same(edg$4 near10 vector$2)same(gradient$2)	US-PGPUB; USPAT; USOCR; FPRS; EPO; JPO; DERWENT; IBM_TDB	OR	OFF	2018/08/04 10:45
S17	221	S16 same(edg$3 near10 point$3)	US-PGPUB; USPAT; USOCR; FPRS; EPO; JPO; DERWENT; IBM_TDB	OR	OFF	2018/08/04 10:45
S18	27	S17 same((lin$2 near10 edg$3)near10 point$3)	US-PGPUB; USPAT; USOCR; FPRS; EPO; JPO; DERWENT; IBM_TDB	OR	OFF	2018/08/04 10:45
S19	28485	(camera$3 or scan$4 or detect$6 or captur$4 or extract$4 or read$4 or vision$3)same(edg$4 near10 imag$4)same(gradient$2 or chang$3 or slop$3)	US-PGPUB; USPAT; USOCR; FPRS; EPO; JPO; DERWENT; IBM_TDB	OR	OFF	2018/08/04 10:47
S20	41065	(camera$3 or scan$4 or detect$6 or captur$4 or extract$4 or read$4 or vision$3)same(line near10 imag$4)same(gradient$2 or chang$3 or slop$3)	US-PGPUB; USPAT; USOCR; FPRS; EPO; JPO; DERWENT; IBM_TDB	OR	OFF	2018/08/04 10:48
S21	5071	S19 and S20	US-PGPUB; USPAT; USOCR; FPRS; EPO; JPO; DERWENT; IBM_TDB	OR	OFF	2018/08/04 10:48
S22	4379	S21 and(mov$3 or movment$4 or shift$4 or displac$6 or motion$4 or rotat$3 or rotation$3 or orientat$6 or track$4 or vector$2)	US-PGPUB; USPAT; USOCR; FPRS; EPO; JPO; DERWENT;	OR	OFF	2018/08/04 10:50

			IBM_TDB			
S23	2470	S21 and((mov$3 or movment$4 or shift$4 or displac$6 or motion$4 or rotat$3 or rotation$3 or orientat$6 or track$4 or vector$2)near10 line)	US-PGPUB; USPAT; USOCR; FPRS; EPO; JPO; DERWENT; IBM_TDB	OR	OFF	2018/08/04 10:51
S24	1811	S23 and((divid$3 or extract$4 or partition$3 or partial$3 or portion$4 or segment$6 or region$4 or block$2 or target$4)near10 edg$3)	US-PGPUB; USPAT; USOCR; FPRS; EPO; JPO; DERWENT; IBM_TDB	OR	OFF	2018/08/04 10:53
S25	245	S24 and(gradient$2 near10 vector$2)	US-PGPUB; USPAT; USOCR; FPRS; EPO; JPO; DERWENT; IBM_TDB	OR	OFF	2018/08/04 10:55
S26	238	S25 and (lin$2 near10 edg$2)	US-PGPUB; USPAT; USOCR; FPRS; EPO; JPO; DERWENT; IBM_TDB	OR	OFF	2018/08/04 10:57
S27	40	S26 and((extract$3 near10 edg$3)near10 point$2)	US-PGPUB; USPAT; USOCR; FPRS; EPO; JPO; DERWENT; IBM_TDB	OR	OFF	2018/08/04 10:59
S28	25	S27 AND ((G06T7/11 OR G06T7/73 OR G06T7/0012 OR G06T7/12 OR G06T7/579 OR G06T2207/20224 OR G06T7/13 OR G06T7/20 OR G06T11/003 OR G06K9/4671 OR G06K9/4604 OR G06K2009/3291 OR G06K9/00268 OR G06K9/00744 OR G06K9/46 OR G06K9/48 OR G06K9/482).CPC.)	US-PGPUB; USPAT	OR	OFF	2018/08/04 11:00
S30	1	"8218913".PN.	USPAT; USOCR	OR	OFF	2018/08/04 12:08
S31	1	"7967016".PN.	USPAT; USOCR	OR	OFF	2018/08/04 12:28
S32	1	"7217266".PN.	USPAT; USOCR	OR	OFF	2018/08/04 12:28
S33	1	"6984228".PN.	USPAT; USOCR	OR	OFF	2018/08/04 12:28
S34	1	"8218913".PN.	USPAT; USOCR	OR	OFF	2018/08/04 12:29
S35	1	"8194953".PN.	USPAT; USOCR	OR	OFF	2018/08/04 12:29
S36	1	"8805083".PN.	USPAT; USOCR	OR	OFF	2018/08/04 12:30
S37	25	"2013084221"	US-PGPUB; USPAT; USOCR; FPRS; EPO; JPO; DERWENT; IBM_TDB	OR	OFF	2018/08/04 13:15
S38	28485	(camera$3 or scan$4 or detect$6 or captur$4 or extract$4 or read$4 or vision$3)same(edg$4 near10 imag$4)same(gradient$2 or chang$3 or slop$3)	US-PGPUB; USPAT; USOCR; FPRS; EPO; JPO; DERWENT; IBM_TDB	OR	OFF	2018/08/06 11:49

S39	41065	(camera$3 or scan$4 or detect$6 or captur$4 or extract$4 or read$4 or vision$3)same(line near10 imag$4)same(gradient$2 or chang$3 or slop$3)	US-PGPUB; USPAT; USOCR; FPRS; EPO; JPO; DERWENT; IBM_TDB	OR	OFF	2018/08/06 11:49
S40	5071	S38 and S39	US-PGPUB; USPAT; USOCR; FPRS; EPO; JPO; DERWENT; IBM_TDB	OR	OFF	2018/08/06 11:49
S41	2470	S40 and((mov$3 or movment$4 or shift$4 or displac$6 or motion$4 or rotat$3 or rotation$3 or orientat$6 or track$4 or vector$2)near10 line)	US-PGPUB; USPAT; USOCR; FPRS; EPO; JPO; DERWENT; IBM_TDB	OR	OFF	2018/08/06 11:49
S42	1811	S41 and((divid$3 or extract$4 or partition$3 or partial$3 or portion$4 or segment$6 or region$4 or block$2 or target$4)near10 edg$3)	US-PGPUB; USPAT; USOCR; FPRS; EPO; JPO; DERWENT; IBM_TDB	OR	OFF	2018/08/06 11:49
S43	245	S42 and(gradient$2 near10 vector$2)	US-PGPUB; USPAT; USOCR; FPRS; EPO; JPO; DERWENT; IBM_TDB	OR	OFF	2018/08/06 11:49
S44	238	S43 and (lin$2 near10 edg$2)	US-PGPUB; USPAT; USOCR; FPRS; EPO; JPO; DERWENT; IBM_TDB	OR	OFF	2018/08/06 11:49
S45	79	S44 AND ((G06T7/11 OR G06T7/73 OR G06T7/0012 OR G06T7/12 OR G06T7/579 OR G06T2207/20224 OR G06T7/13 OR G06T7/20 OR G06T11/003 OR G06K9/4671 OR G06K9/4604 OR G06K2009/3291 OR G06K9/00268 OR G06K9/00744 OR G06K9/46 OR G06K9/48 OR G06K9/482).CPC.)	US-PGPUB; USPAT	OR	OFF	2018/08/06 11:49
S46	32434	(camera$3 or scan$4 or detect$6 or captur$4 or extract$4 or read$4 or vision$3)same(edg$4 near10 imag$4)same(gradient$2 or chang$3 or slop$3)	US-PGPUB; USPAT; USOCR; FPRS; EPO; JPO; DERWENT; IBM_TDB	OR	OFF	2019/12/23 09:55
S47	45229	(camera$3 or scan$4 or detect$6 or captur$4 or extract$4 or read$4 or vision$3)same(line near10 imag$4)same(gradient$2 or chang$3 or slop$3)	US-PGPUB; USPAT; USOCR; FPRS; EPO; JPO; DERWENT; IBM_TDB	OR	OFF	2019/12/23 09:55
S48	5704	S46 and S47	US-PGPUB; USPAT; USOCR; FPRS; EPO; JPO; DERWENT; IBM_TDB	OR	OFF	2019/12/23 09:55
S49	2746	S48 and((mov$3 or movment$4 or shift$4 or displac$6 or motion$4 or rotat$3 or rotation$3 or orientat$6 or track$4 or vector$2)near10 line)	US-PGPUB; USPAT; USOCR; FPRS;	OR	OFF	2019/12/23 09:55

			EPO; JPO; DERWENT; IBM_TDB			
S50	2024	S49 and((divid$3 or extract$4 or partition$3 or partial$3 or portion$4 or segment$6 or region$4 or block$2 or target$4)near10 edg$3)	US-PGPUB; USPAT; USOCR; FPRS; EPO; JPO; DERWENT; IBM_TDB	OR	OFF	2019/12/23 09:55
S51	270	S50 and(gradient$2 near10 vector$2)	US-PGPUB; USPAT; USOCR; FPRS; EPO; JPO; DERWENT; IBM_TDB	OR	OFF	2019/12/23 09:55
S52	261	S51 and (lin$2 near10 edg$2)	US-PGPUB; USPAT; USOCR; FPRS; EPO; JPO; DERWENT; IBM_TDB	OR	OFF	2019/12/23 09:55
S53	43	S52 and((extract$3 near10 edg$3)near10 point$2)	US-PGPUB; USPAT; USOCR; FPRS; EPO; JPO; DERWENT; IBM_TDB	OR	OFF	2019/12/23 09:55
S54	28	S53 AND ((G06T7/11 OR G06T7/73 OR G06T7/0012 OR G06T7/12 OR G06T7/579 OR G06T2207/20224 OR G06T7/13 OR G06T7/20 OR G06T11/003 OR G06K9/4671 OR G06K9/4604 OR G06K2009/3291 OR G06K9/00268 OR G06K9/00744 OR G06K9/46 OR G06K9/48 OR G06K9/482).CPC.)	US-PGPUB; USPAT	OR	OFF	2019/12/23 09:55
S55	8472	(camera$3 or scan$4 or detect$6 or captur$4 or extract$4 or read$4 or vision$3)same(tooth$3 or teeth$2)same(3D or three-dimensional or three adj2 dimensional)	US-PGPUB; USPAT; USOCR; FPRS; EPO; JPO; DERWENT; IBM_TDB	OR	OFF	2019/12/23 10:27
S56	462	S55 same(shad$3 or textur$3)	US-PGPUB; USPAT; USOCR; FPRS; EPO; JPO; DERWENT; IBM_TDB	OR	OFF	2019/12/23 10:58
S57	2945	S55 same(semantic$4 or correlat$4 or match$4 or similar$4 or associat$4 or compar$6 or disparit$4)	US-PGPUB; USPAT; USOCR; FPRS; EPO; JPO; DERWENT; IBM_TDB	OR	OFF	2019/12/23 11:00
S58	222	S57 same(shad$3 or textur$3)	US-PGPUB; USPAT; USOCR; FPRS; EPO; JPO; DERWENT; IBM_TDB	OR	OFF	2019/12/23 11:00
S59	111	S58 same(region$3 or partial$3 or portion$3 or segment$6 or partition$3 or extract$3 or divid$3 or target$3)	US-PGPUB; USPAT; USOCR; FPRS; EPO; JPO; DERWENT; IBM_TDB	OR	OFF	2019/12/23 11:02

S60	96	S58 same(memor$4 or cloud$2 or stor$4 or database$4 or register$4)	US-PGPUB; USPAT; USOCR; FPRS; EPO; JPO; DERWENT; IBM_TDB	OR	OFF	2019/12/23 11:14
S61	32728	(camera$3 or scan$4 or detect$6 or captur$4 or extract$4 or read$4 or vision$3)same(edg$4 near10 imag$4)same(gradient$2 or chang$3 or slop$3)	US-PGPUB; USPAT; USOCR; FPRS; EPO; JPO; DERWENT; IBM_TDB	OR	OFF	2020/02/03 09:55
S62	45550	(camera$3 or scan$4 or detect$6 or captur$4 or extract$4 or read$4 or vision$3)same(line near10 imag$4)same(gradient$2 or chang$3 or slop$3)	US-PGPUB; USPAT; USOCR; FPRS; EPO; JPO; DERWENT; IBM_TDB	OR	OFF	2020/02/03 09:55
S63	5759	S61 and S62	US-PGPUB; USPAT; USOCR; FPRS; EPO; JPO; DERWENT; IBM_TDB	OR	OFF	2020/02/03 09:55
S64	2775	S63 and((mov$3 or movment$4 or shift$4 or displac$6 or motion$4 or rotat$3 or rotation$3 or orientat$6 or track$4 or vector$2)near10 line)	US-PGPUB; USPAT; USOCR; FPRS; EPO; JPO; DERWENT; IBM_TDB	OR	OFF	2020/02/03 09:55
S65	2047	S64 and((divid$3 or extract$4 or partition$3 or partial$3 or portion$4 or segment$6 or region$4 or block$2 or target$4)near10 edg$3)	US-PGPUB; USPAT; USOCR; FPRS; EPO; JPO; DERWENT; IBM_TDB	OR	OFF	2020/02/03 09:55
S66	272	S65 and(gradient$2 near10 vector$2)	US-PGPUB; USPAT; USOCR; FPRS; EPO; JPO; DERWENT; IBM_TDB	OR	OFF	2020/02/03 09:55
S67	263	S66 and (lin$2 near10 edg$2)	US-PGPUB; USPAT; USOCR; FPRS; EPO; JPO; DERWENT; IBM_TDB	OR	OFF	2020/02/03 09:55
S68	43	S67 and((extract$3 near10 edg$3)near10 point$2)	US-PGPUB; USPAT; USOCR; FPRS; EPO; JPO; DERWENT; IBM_TDB	OR	OFF	2020/02/03 09:55
S69	28	S68 AND ((G06T7/11 OR G06T7/73 OR G06T7/0012 OR G06T7/12 OR G06T7/579 OR G06T2207/20224 OR G06T7/13 OR G06T7/20 OR G06T11/003 OR G06K9/4671 OR G06K9/4604 OR G06K2009/3291 OR G06K9/00268 OR G06K9/00744 OR G06K9/46 OR G06K9/48 OR G06K9/482).CPC.)	US-PGPUB; USPAT	OR	OFF	2020/02/03 10:00
S70	1	"6807287".PN.	USPAT; USOCR	OR	OFF	2020/02/03 10:15
S71	5	S67 and(tooth$3 or teeth$3)	US-PGPUB;	OR	OFF	2020/02/03

			USPAT; USOCR; FPRS; EPO; JPO; DERWENT; IBM_TDB			10:19
S72	1782	S62 and(tooth$3 or teeth$3)	US-PGPUB; USPAT; USOCR; FPRS; EPO; JPO; DERWENT; IBM_TDB	OR	OFF	2020/02/03 10:19
S73	1206	S72 and(textur$3 or shad$3 or color$3 or colour$2)	US-PGPUB; USPAT; USOCR; FPRS; EPO; JPO; DERWENT; IBM_TDB	OR	OFF	2020/02/03 10:21
S74	1009	S73 and(semantic$4 or correlat$4 or match$4 or similar$4 or associat$4 or compar$6 or disparit$4)	US-PGPUB; USPAT	OR	OFF	2020/02/03 10:27
S75	87	S74 and((tooth$3 or teeth$3)near10 patient$3)	US-PGPUB; USPAT; USOCR; FPRS; EPO; JPO; DERWENT; IBM_TDB	OR	OFF	2020/02/03 10:30
S76	1	"7168954".PN.	USPAT; USOCR	OR	OFF	2020/02/03 11:24
S77	32824	(camera$3 or scan$4 or detect$6 or captur$4 or extract$4 or read$4 or vision$3)same(edg$4 near10 imag$4)same(gradient$2 or chang$3 or slop$3)	US-PGPUB; USPAT; USOCR; FPRS; EPO; JPO; DERWENT; IBM_TDB	OR	OFF	2020/02/18 08:46
S78	45687	(camera$3 or scan$4 or detect$6 or captur$4 or extract$4 or read$4 or vision$3)same(line near10 imag$4)same(gradient$2 or chang$3 or slop$3)	US-PGPUB; USPAT; USOCR; FPRS; EPO; JPO; DERWENT; IBM_TDB	OR	OFF	2020/02/18 08:46
S79	5779	S77 and S78	US-PGPUB; USPAT; USOCR; FPRS; EPO; JPO; DERWENT; IBM_TDB	OR	OFF	2020/02/18 08:46
S80	2781	S79 and((mov$3 or movment$4 or shift$4 or displac$6 or motion$4 or rotat$3 or rotation$3 or orientat$6 or track$4 or vector$2)near10 line)	US-PGPUB; USPAT; USOCR; FPRS; EPO; JPO; DERWENT; IBM_TDB	OR	OFF	2020/02/18 08:46
S81	2051	S80 and((divid$3 or extract$4 or partition$3 or partial$3 or portion$4 or segment$6 or region$4 or block$2 or target$4)near10 edg$3)	US-PGPUB; USPAT; USOCR; FPRS; EPO; JPO; DERWENT; IBM_TDB	OR	OFF	2020/02/18 08:46
S82	272	S81 and(gradient$2 near10 vector$2)	US-PGPUB; USPAT; USOCR; FPRS;	OR	OFF	2020/02/18 08:46

			EPO; JPO; DERWENT; IBM_TDB			
S83	263	S82 and (lin$2 near10 edg$2)	US-PGPUB; USPAT; USOCR; FPRS; EPO; JPO; DERWENT; IBM_TDB	OR	OFF	2020/02/18 08:46
S84	43	S83 and((extract$3 near10 edg$3)near10 point$2)	US-PGPUB; USPAT; USOCR; FPRS; EPO; JPO; DERWENT; IBM_TDB	OR	OFF	2020/02/18 08:46
S85	28	S84 AND ((G06T7/11 OR G06T7/73 OR G06T7/0012 OR G06T7/12 OR G06T7/579 OR G06T2207/20224 OR G06T7/13 OR G06T7/20 OR G06T11/003 OR G06K9/4671 OR G06K9/4604 OR G06K2009/3291 OR G06K9/00268 OR G06K9/00744 OR G06K9/46 OR G06K9/48 OR G06K9/482).CPC.)	US-PGPUB; USPAT	OR	OFF	2020/02/18 08:50

2/19/2020 1:08:17 PM
C:\Users\ykassa\Documents\EAST\Workspaces\15888764.wsp

PART B - FEE(S) TRANSMITTAL

Complete and send this form, together with applicable fee(s), by mail or fax, or via EFS-Web.

By mail, send to: Mail Stop ISSUE FEE
Commissioner for Patents
P.O. Box 1450
Alexandria, Virginia 22313-1450

By fax, send to: (571)-273-2885

INSTRUCTIONS: This form should be used for transmitting the ISSUE FEE and PUBLICATION FEE (if required). Blocks 1 through 5 should be completed where appropriate. All further correspondence including the Patent, advance orders and notification of maintenance fees will be mailed to the current correspondence address as indicated unless corrected below or directed otherwise in Block 1, by (a) specifying a new correspondence address; and/or (b) indicating a separate "FEE ADDRESS" for maintenance fee notifications.

CURRENT CORRESPONDENCE ADDRESS (Note: Use Block 1 for any change of address)

21839 7590 02/25/2020
BUCHANAN, INGERSOLL & ROONEY PC
POST OFFICE BOX 1404
ALEXANDRIA, VA 22313-1404

Note: A certificate of mailing can only be used for domestic mailings of the Fee(s) Transmittal. This certificate cannot be used for any other accompanying papers. Each additional paper, such as an assignment or formal drawing, must have its own certificate of mailing or transmission.

Certificate of Mailing or Transmission

I hereby certify that this Fee(s) Transmittal is being deposited with the United States Postal Service with sufficient postage for first class mail in an envelope addressed to the Mail Stop ISSUE FEE address above, or being transmitted to the USPTO via EFS-Web or by facsimile to (571) 273-2885, on the date below.

(Typed or printed name)

(Signature)

(Date)

APPLICATION NO.	FILING DATE	FIRST NAMED INVENTOR	ATTORNEY DOCKET NO.	CONFIRMATION NO.
15/888,764	02/05/2018	Bo ESBECH	0079124-000162	3964

TITLE OF INVENTION: DETECTING TOOTH SHADE

APPLN. TYPE	ENTITY STATUS	ISSUE FEE DUE	PUBLICATION FEE DUE	PREV. PAID ISSUE FEE	TOTAL FEE(S) DUE	DATE DUE
nonprovisional	UNDISCOUNTED	$1000	$0.00	$0.00	$1000	05/26/2020

EXAMINER	ART UNIT	CLASS-SUBCLASS
KASSA, YOSEF	2663	382-154000

1. Change of correspondence address or indication of "Fee Address" (37 CFR 1.363).

❑ Change of correspondence address (or Change of Correspondence Address form PTO/SB/122) attached.

❑ "Fee Address" indication (or "Fee Address" Indication form PTO/SB/47; Rev 03-09 or more recent) attached. **Use of a Customer Number is required.**

2. For printing on the patent front page, list
(1) The names of up to 3 registered patent attorneys or agents OR, alternatively,
(2) The name of a single firm (having as a member a registered attorney or agent) and the names of up to 2 registered patent attorneys or agents. If no name is listed, no name will be printed.

1 BUCHANAN INGERSOLL & ROONEY P.C.
2
3

3. ASSIGNEE NAME AND RESIDENCE DATA TO BE PRINTED ON THE PATENT (print or type)

PLEASE NOTE: Unless an assignee is identified below, no assignee data will appear on the patent. If an assignee is identified below, the document must have been previously recorded, or filed for recordation, as set forth in 37 CFR 3.11 and 37 CFR 3.81(a). Completion of this form is NOT a substitute for filing an assignment.

(A) NAME OF ASSIGNEE: 3SHAPE A/S

(B) RESIDENCE: (CITY and STATE OR COUNTRY): Copenhagen K, Denmark

Please check the appropriate assignee category or categories (will not be printed on the patent) : ❑ Individual ☒ Corporation or other private group entity ❑ Government

4a. Fees submitted: ☒ Issue Fee ❑ Publication Fee (if required) ❑ Advance Order - # of Copies _____

4b. Method of Payment: *(Please first reapply any previously paid fee shown above)*

☒ Electronic Payment via EFS-Web ❑ Enclosed check ❑ Non-electronic payment by credit card (Attach form PTO-2038)

☒ The Director is hereby authorized to charge the required fee(s), any deficiency, or credit any overpayment to Deposit Account No. 02-4800

5. **Change in Entity Status** (from status indicated above)

❑ Applicant certifying micro entity status. See 37 CFR 1.29

❑ Applicant asserting small entity status. See 37 CFR 1.27

❑ Applicant changing to regular undiscounted fee status.

NOTE: Absent a valid certification of Micro Entity Status (see forms PTO/SB/15A and 15B), issue fee payment in the micro entity amount will not be accepted at the risk of application abandonment.
NOTE: If the application was previously under micro entity status, checking this box will be taken to be a notification of loss of entitlement to micro entity status.
NOTE: Checking this box will be taken to be a notification of loss of entitlement to small or micro entity status, as applicable.

NOTE: This form must be signed in accordance with 37 CFR 1.31 and 1.33. See 37 CFR 1.4 for signature requirements and certifications.

Authorized Signature /Travis D. Boone/ Date 22 May 2020

Typed or printed name Travis D. Boone Registration No. 52,635

Electronic Patent Application Fee Transmittal

Application Number:	15888764
Filing Date:	05-Feb-2018
Title of Invention:	DETECTING TOOTH SHADE
First Named Inventor/Applicant Name:	Bo ESBECH
Filer:	Travis Dean Boone/Denise Miles
Attorney Docket Number:	0079124-000162

Filed as Large Entity

Filing Fees for Utility under 35 USC 111(a)

Description	Fee Code	Quantity	Amount	Sub-Total in USD($)
Basic Filing:				
Pages:				
Claims:				
Miscellaneous-Filing:				
Petition:				
Patent-Appeals-and-Interference:				
Post-Allowance-and-Post-Issuance:				
UTILITY APPL ISSUE FEE	1501	1	1000	1000

Description	Fee Code	Quantity	Amount	Sub-Total in USD($)
Extension-of-Time:				
Miscellaneous:				
		Total in USD ($)		**1000**

Electronic Acknowledgement Receipt	
EFS ID:	39516208
Application Number:	15888764
International Application Number:	
Confirmation Number:	3964
Title of Invention:	DETECTING TOOTH SHADE
First Named Inventor/Applicant Name:	Bo ESBECH
Customer Number:	21839
Filer:	Travis Dean Boone/Denise Miles
Filer Authorized By:	Travis Dean Boone
Attorney Docket Number:	0079124-000162
Receipt Date:	22-MAY-2020
Filing Date:	05-FEB-2018
Time Stamp:	11:33:34
Application Type:	Utility under 35 USC 111(a)

Payment information:

Submitted with Payment	yes
Payment Type	CARD
Payment was successfully received in RAM	$1000
RAM confirmation Number	E20205LB33500318
Deposit Account	
Authorized User	
The Director of the USPTO is hereby authorized to charge indicated fees and credit any overpayment as follows:	

File Listing:

Document Number	Document Description	File Name	File Size(Bytes)/ Message Digest	Multi Part /.zip	Pages (if appl.)
1	Issue Fee Payment (PTO-85B)	Issue_Fee_Transmittal_-_As_Filed_05222020.pdf	1230205 315dcebadae28e17f3f279a47fd592bab57ac1a7	no	1
Warnings:					
Information:					
2	Fee Worksheet (SB06)	fee-info.pdf	29985 fb8ec7f2a4aa5150d80fc83ed29842e42319c2d7	no	2
Warnings:					
Information:					
		Total Files Size (in bytes):	1260190		

This Acknowledgement Receipt evidences receipt on the noted date by the USPTO of the indicated documents, characterized by the applicant, and including page counts, where applicable. It serves as evidence of receipt similar to a Post Card, as described in MPEP 503.

New Applications Under 35 U.S.C. 111
If a new application is being filed and the application includes the necessary components for a filing date (see 37 CFR 1.53(b)-(d) and MPEP 506), a Filing Receipt (37 CFR 1.54) will be issued in due course and the date shown on this Acknowledgement Receipt will establish the filing date of the application.
National Stage of an International Application under 35 U.S.C. 371
If a timely submission to enter the national stage of an international application is compliant with the conditions of 35 U.S.C. 371 and other applicable requirements a Form PCT/DO/EO/903 indicating acceptance of the application as a national stage submission under 35 U.S.C. 371 will be issued in addition to the Filing Receipt, in due course.
New International Application Filed with the USPTO as a Receiving Office
If a new international application is being filed and the international application includes the necessary components for an international filing date (see PCT Article 11 and MPEP 1810), a Notification of the International Application Number and of the International Filing Date (Form PCT/RO/105) will be issued in due course, subject to prescriptions concerning national security, and the date shown on this Acknowledgement Receipt will establish the international filing date of the application.

UNITED STATES PATENT AND TRADEMARK OFFICE

UNITED STATES DEPARTMENT OF COMMERCE
United States Patent and Trademark Office
Address: COMMISSIONER FOR PATENTS
P.O. Box 1450
Alexandria, Virginia 22313-1450
www.uspto.gov

APPLICATION NO.	ISSUE DATE	PATENT NO.	ATTORNEY DOCKET NO.	CONFIRMATION NO.
15/888,764	06/30/2020	10695151	0079124-000162	3964

21839 7590 06/10/2020
BUCHANAN, INGERSOLL & ROONEY PC
POST OFFICE BOX 1404
ALEXANDRIA, VA 22313-1404

ISSUE NOTIFICATION

The projected patent number and issue date are specified above.

Determination of Patent Term Adjustment under 35 U.S.C. 154 (b)
(application filed on or after May 29, 2000)

The Patent Term Adjustment is 168 day(s). Any patent to issue from the above-identified application will include an indication of the adjustment on the front page.

If a Continued Prosecution Application (CPA) was filed in the above-identified application, the filing date that determines Patent Term Adjustment is the filing date of the most recent CPA.

Applicant will be able to obtain more detailed information by accessing the Patent Application Information Retrieval (PAIR) WEB site (http://pair.uspto.gov).

Any questions regarding the Patent Term Extension or Adjustment determination should be directed to the Office of Patent Legal Administration at (571)-272-7702. Questions relating to issue and publication fee payments should be directed to the Application Assistance Unit (AAU) of the Office of Data Management (ODM) at (571)-272-4200.

APPLICANT(s) (Please see PAIR WEB site http://pair.uspto.gov for additional applicants):

Bo ESBECH, Gentofte, DENMARK;
3SHAPE A/S, Copenhagen K, DENMARK;
Rune FISKER, Virum, DENMARK;
Lars HENRIKSEN, Bagsværd, DENMARK;
Tais CLAUSEN, Klagshamn, SWEDEN;

The United States represents the largest, most dynamic marketplace in the world and is an unparalleled location for business investment, innovation, and commercialization of new technologies. The USA offers tremendous resources and advantages for those who invest and manufacture goods here. Through SelectUSA, our nation works to encourage and facilitate business investment. To learn more about why the USA is the best country in the world to develop technology, manufacture products, and grow your business, visit SelectUSA.gov.

IR103 (Rev. 10/09)

AO 120 (Rev. 08/10)

TO: Mail Stop 8 Director of the U.S. Patent and Trademark Office P.O. Box 1450 Alexandria, VA 22313-1450	**REPORT ON THE FILING OR DETERMINATION OF AN ACTION REGARDING A PATENT OR TRADEMARK**

In Compliance with 35 U.S.C. § 290 and/or 15 U.S.C. § 1116 you are hereby advised that a court action has been filed in the U.S. District Court For The Western District of Texas, Waco Division on the following

☐ Trademarks or ☑ Patents. (☐ the patent action involves 35 U.S.C. § 292.):

DOCKET NO.	DATE FILED	U.S. DISTRICT COURT
6:21-cv-1110	10/26/2021	For The Western District of Texas, Waco Division

PLAINTIFF	DEFENDANT
3SHAPE A/S	CARESTREAM DENTAL, LLC

	PATENT OR TRADEMARK NO.	DATE OF PATENT OR TRADEMARK	HOLDER OF PATENT OR TRADEMARK
1	RE48,221	9/22/2020	3SHAPE A/S
2	10,695,151	6/30/2020	3SHAPE A/S
3	11,076,146	7/27/2021	3SHAPE A/S
4			
5			

In the above—entitled case, the following patent(s)/ trademark(s) have been included:

DATE INCLUDED	INCLUDED BY ☐ Amendment ☐ Answer ☐ Cross Bill ☐ Other Pleading	
PATENT OR TRADEMARK NO.	DATE OF PATENT OR TRADEMARK	HOLDER OF PATENT OR TRADEMARK
1		
2		
3		
4		
5		

In the above—entitled case, the following decision has been rendered or judgement issued:

DECISION/JUDGEMENT

CLERK	(BY) DEPUTY CLERK	DATE

Copy 1—Upon initiation of action, mail this copy to Director Copy 3—Upon termination of action, mail this copy to Director
Copy 2—Upon filing document adding patent(s), mail this copy to Director Copy 4—Case file copy

AO 120 (Rev. 08/10)

TO:	Mail Stop 8 Director of the U.S. Patent and Trademark Office P.O. Box 1450 Alexandria, VA 22313-1450	REPORT ON THE FILING OR DETERMINATION OF AN ACTION REGARDING A PATENT OR TRADEMARK

In Compliance with 35 U.S.C. § 290 and/or 15 U.S.C. § 1116 you are hereby advised that a court action has been filed in the U.S. District Court for the Western District of Texas Waco Division on the following

☐ Trademarks or ☑ Patents. (☐ the patent action involves 35 U.S.C. § 292.):

DOCKET NO.	DATE FILED 5/2/2022	U.S. DISTRICT COURT for the Western District of Texas Waco Division
PLAINTIFF 3Shape A/S		DEFENDANT Medit Corp.

	PATENT OR TRADEMARK NO.	DATE OF PATENT OR TRADEMARK	HOLDER OF PATENT OR TRADEMARK
1	11,076,146	7/27/2021	3Shape A/S
2	9,629,551	4/25/2017	3Shape A/S
3	10,064,553	9/4/2018	3Shape A/S
4	10,695,151	6/30/2020	3Shape A/S
5			

In the above—entitled case, the following patent(s)/ trademark(s) have been included:

DATE INCLUDED	INCLUDED BY ☐ Amendment ☐ Answer ☐ Cross Bill ☐ Other Pleading	
PATENT OR TRADEMARK NO.	DATE OF PATENT OR TRADEMARK	HOLDER OF PATENT OR TRADEMARK
1		
2		
3		
4		
5		

In the above—entitled case, the following decision has been rendered or judgement issued:

DECISION/JUDGEMENT

CLERK	(BY) DEPUTY CLERK	DATE

Copy 1—Upon initiation of action, mail this copy to Director **Copy 3—Upon termination of action, mail this copy to Director**
Copy 2—Upon filing document adding patent(s), mail this copy to Director **Copy 4—Case file copy**