ResearchGate

See discussions, stats, and author profiles for this publication at: https://www.researchgate.net/publication/259097681

Recent advances in dental optics – Part I: 3D intraoral scanners for restorative dentistry

Article *in* Optics and Lasers in Engineering · March 2014

DOI: 10.1016/j.optlaseng.2013.07.017

CITATIONS
190

READS
24,569

5 authors, including:

Silvia Logozzo
Università degli Studi di Perugia
46 PUBLICATIONS **1,144** CITATIONS

SEE PROFILE

Elisabetta M Zanetti
Università degli Studi di Perugia
93 PUBLICATIONS **1,012** CITATIONS

SEE PROFILE

Giordano Franceschini
Università degli Studi di Perugia
34 PUBLICATIONS **558** CITATIONS

SEE PROFILE

Ari Kilpela
Enics
42 PUBLICATIONS **856** CITATIONS

SEE PROFILE

Some of the authors of this publication are also working on these related projects:

Project µMBioEng 2016 - PhD Summer School View project

Project Hollow Fibre Membrane Bioreactors View project

All content following this page was uploaded by Ari Kilpela on 24 January 2018.

The user has requested enhancement of the downloaded file.

ARTICLE IN PRESS

Optics and Lasers in Engineering ∎ (∎∎∎∎) ∎∎∎–∎∎∎

Contents lists available at ScienceDirect

Optics and Lasers in Engineering

journal homepage: www.elsevier.com/locate/optlaseng

Recent advances in dental optics – Part I: 3D intraoral scanners for restorative dentistry

Silvia Logozzo [a,*], Elisabetta M. Zanetti [a], Giordano Franceschini [a], Ari Kilpelä [b], Anssi Mäkynen [b]

[a] Department of Industrial Engineering, University of Perugia, Via Duranti, 93 06125 Perugia, Italy
[b] Department of Electrical Engineering, University of Oulu, P.O.BOX 8000, FI-90014 Oulu, Finland

ARTICLE INFO

Keywords:
Intraoral scanner
Digital dental impressions
Triangulation
Confocal microscopy
Optical coherence tomography

ABSTRACT

Intra-oral scanning technology is a very fast-growing field in dentistry since it responds to the need of an accurate three-dimensional mapping of the mouth, as required in a large number of procedures such as restorative dentistry and orthodontics. Nowadays, more than 10 intra-oral scanning devices for restorative dentistry have been developed all over the world even if only some of those devices are currently available on the market. All the existing intraoral scanners try to face with problems and disadvantages of traditional impression fabrication process and are based on different non-contact optical technologies and principles. The aim of this publication is to provide an extensive review of existing intraoral scanners for restorative dentistry evaluating their working principles, features and performances.

© 2013 Elsevier Ltd. All rights reserved.

1. Background

Three-dimensional scanning of the mouth is required in a large number of procedures in dentistry such as restorative dentistry and orthodontics. The aim of the 3D mapping of the oral cavity is to create *digital impressions*.

Restorative dentistry is of course the main field that require the application of very accurate 3D intraoral scanners. For the realization of any dental prosthesis it is necessary to realize three-dimensional mathematical models of the dentition, performing a reverse engineering procedure. Then the prosthesis can be realized by means of CAD/CAM systems.

At present, according to the traditional work flow, this procedure starts at the dentist's office, and the steps leading to prosthesis's creation are as follows:

- the dentist captures the traditional impression by means of impression trays and impression materials;
- the dentist sends the impression tray to the dental laboratory;
- the laboratory's technician pours plaster inside the tray;
- after the hardening he scans the plaster model to have the 3D virtual digital model of the full arch;
- the technician can design the prosthesis by means of CAD/CAM systems and send the file to a milling machine;
- the milling machine produces the prosthesis;
- the prosthesis is applied by the dentist and refined inside the patient's mouth to verify and adjust the occlusion.

Basically, the 3D digital model is used to design the prosthesis and as an input to the program of the milling machine referring to CAD/CAM systems. It can also be used to perform surgery simulations or to build plastic models of the teeth by means of rapid prototyping techniques.

The whole traditional process is often slow and affected by errors. Furthermore, although the traditional impression taking process is very cheap, it is certainly bothering for the patient and, at the present state of the art, definitively obsolete.

By means of devices here described, the dentist can scan the teeth in vivo and he can directly create the virtual 3D model of the dentition. This allows bypassing the dental laboratory for a lot of steps.

According to the state of the art, there are three kinds of workflows in restorative dentistry. The traditional workflow has been described above; it is the oldest and is illustrated in Fig. 1.

Abbreviations: AFI, accordion fringe interferometry; AWS, active wave-front sampling; CAD/CAM, computer aided design/computer aided manufacturing; CLSM or LSCM, confocal laser scanning microscopy; HIPAA, health insurance portability and accountability act; LASER, light amplification by stimulated emission of radiation; LED, light emitting diode; MEMS, micro electro-mechanical system; NA, numerical aperture; OCT, optical coherence tomography; OBJ, alias wavefront technologies file format; PLY, polygon file format or Stanford triangle format; PMT, photo-multiplier tube; SLA, stereo-lithography; S/N or SNR, signal-to-noise ratio; USB, universal serial bus

* Corresponding author. Tel.: +39 348 7142939.
E-mail addresses: sililog@hotmail.com (S. Logozzo), elisabetta.zanetti@unipg.it (E.M. Zanetti), giordano.franceschini@unipg.it (G. Franceschini), arik@ee.oulu.fi (A. Kilpelä), anssi.makynen@ee.oulu.fi (A. Mäkynen).

0143-8166/$ - see front matter © 2013 Elsevier Ltd. All rights reserved.
http://dx.doi.org/10.1016/j.optlaseng.2013.07.017

Exhibit 1011 page 2 of 20
DENTAL IMAGING

Please cite this article as: Logozzo S, et al. Recent advances in dental optics – Part I: 3D intraoral scanners for restorative dentistry. Opt Laser Eng (2013), http://dx.doi.org/10.1016/j.optlaseng.2013.07.017

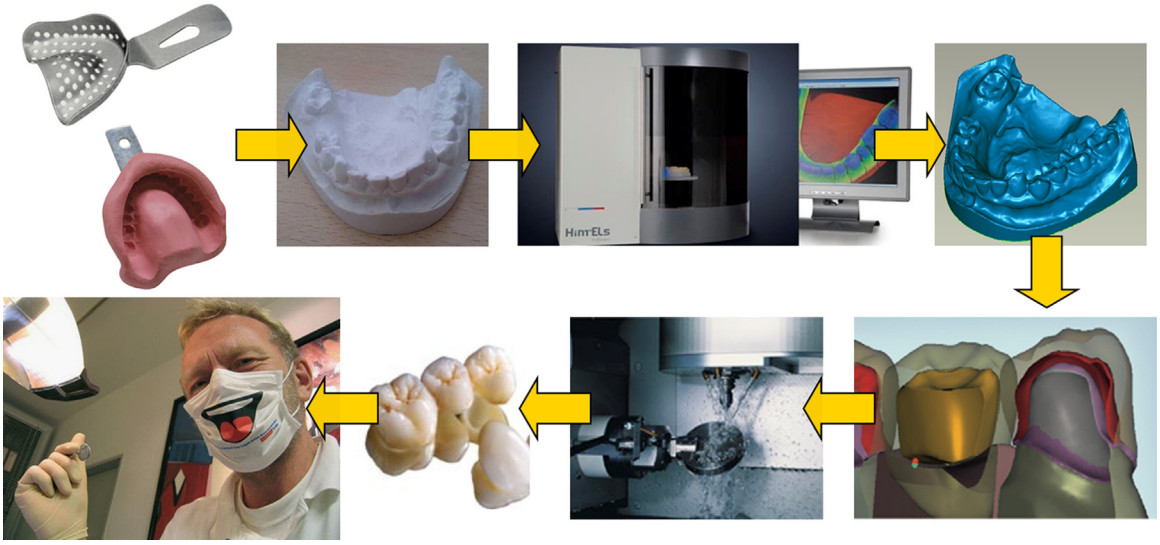

Fig. 1. Traditional workflow for dental impressions.

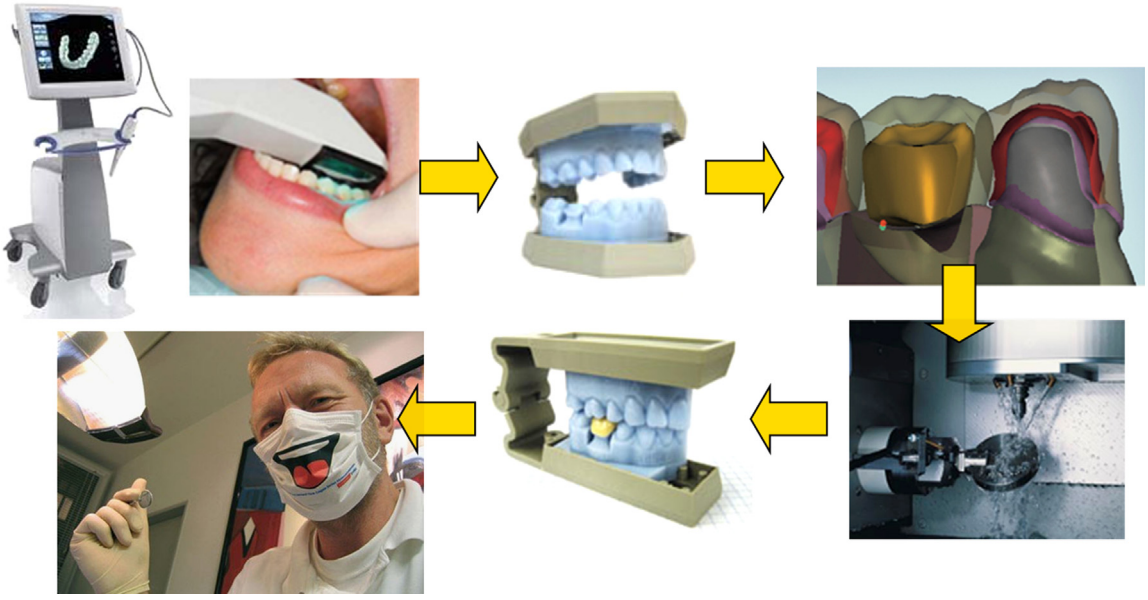

Fig. 2. Former digital workflow for dental impressions.

Sometimes the plaster pouring can be skipped because the impression tray is directly scanned.

The second kind of workflow is the 'former digital workflow'. The term 'former' is used to distinguish this method from the newest one, that is mentioned here as 'rapid digital workflow'. The 'former' digital workflow can be followed by a clinician who owns a standalone intraoral scanner, which is not equipped with a milling unit. The former digital workflow is reported in Fig. 2.

According to the former digital workflow, the steps for prosthesis creation are as follows:

- the dentist captures the digital impression by means of an intraoral scanning device;
- the dentist sends the digital prescription to a laboratory;
- the lab downloads the digital file and uses customized software to digitally cut the die and mark the margins;
- the SLA model is generated by using CAD/CAM systems;
- the technician can proceed with his preferred finishing technique:
  - hand layered porcelain,
  - pressing with wax patterns,
  - digitally designed and milled full contour glass ceramic restoration by means of CAD/CAM systems (the technician must also design the program for the milling machine by means of CAM systems);
- the final restoration is then sent to the doctor for seating.

The third kind of workflow is the rapid digital workflow. This workflow can be followed when the clinician owns an intraoral scanner equipped with an in-office milling unit. The rapid digital workflow is shown in Fig. 3.

According to the rapid digital workflow, the steps for prosthesis creation are as follows:

- the dentist captures the digital impression by means of an intraoral scanning device;
- the dentist designs the restoration and the software automatically generates the program for the milling unit;
- the final restoration is milled in a few minutes;
- the doctor applies the restoration.

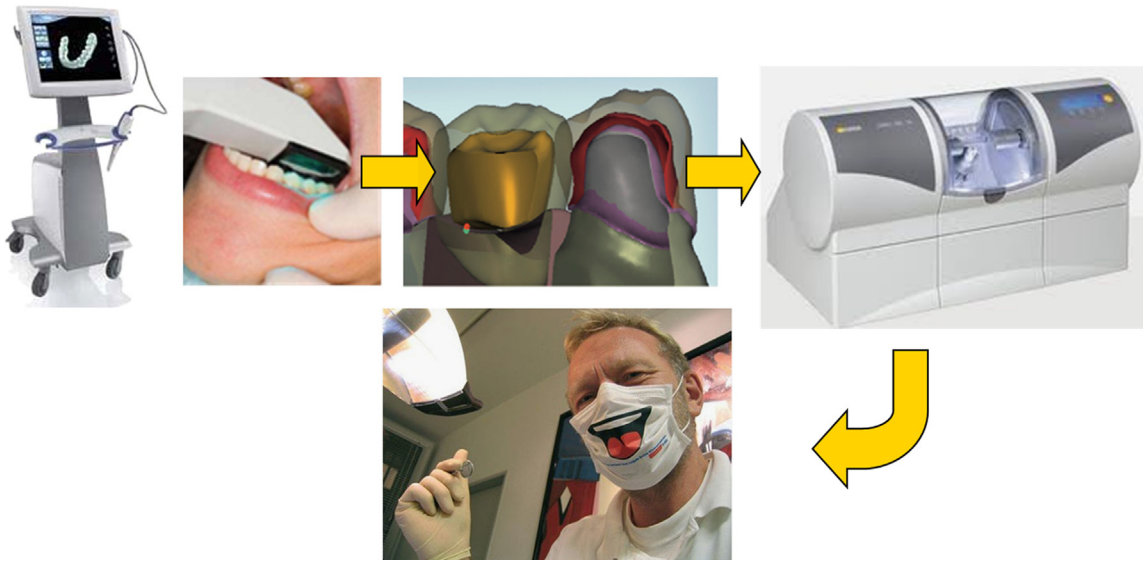

Fig. 3. Rapid digital workflow for dental impressions.

As a result of the application of 3D intraoral scanners, some of the disadvantages related to the traditional workflow can be overcome, as:

- Mould instability;
- Mould transport and packaging;
- Plaster pouring and solidification;
- Delamination;
- Lacerations on margins;
- Contact between the tray and the teeth;
- Geometrical and dimensional inconsistencies between the plaster model and the real teeth.

3D Intraoral scanners can therefore entail the following advantages:

- Implementation of highly accurate models;
- Traditional workflow simplification;
- Possibility to create and periodically update a database of dentitions for future interventions;
- Possibility to simulate surgery interventions on the digital model;

Overcoming all the prior disadvantages.

2. Introduction

The application of CAD/CAM methodologies to the dental field was the brainchild of Dr. Francois Duret in his thesis, presented at the Université Claude Bernard, Faculté d′Odontologie, in Lyon, France in 1973, and entitled 'Empreinte Optique' (Optical Impression). In detail, he developed and patented a CAD/CAM device in 1984. The developed system was presented at the Chicago Midwinter Meeting in 1989, and was able to fabricate a dental crown in 4 h [2,3].

Digital impressions have been introduced, and successfully used, for a number of years, in orthodontics, as well, including Cadent's IOC/OrthoCad, DENTSPLY/GAC's OrthoPlex, Stratos/Orametrix's SureSmile, and EMS'RapidForm, but the introduction of the first digital intraoral scanner for restorative dentistry was in the 1980s by a Swiss dentist, Dr. Werner Mörmann, and an Italian electrical engineer, Marco Brandestini, who developed the fundamentals for CEREC® by Sirona Dental Systems LLC (Charlotte, NC), introduced in 1987, as the first commercially available CAD/CAM system for dental restorations [2,4]. Ever since, research and development by a lot of companies have improved the technologies and created in-office intraoral scanners, which are increasingly user-friendly and produce precisely fitting dental restorations. These systems are capable of capturing three-dimensional virtual images of tooth preparations; restorations may be directly fabricated from such images (using CAD/CAM systems) or the same images can be used to create accurate master models, for the restorations in a dental laboratory [2].

Nowadays, more than 10 intra-oral scanning devices for restorative dentistry exist all over the world. In this paper all these devices are mentioned and 11 are described and analysed. Existing devices are based on different non-contact optical technologies such as confocal microscopy, optical coherence tomography, active and passive stereovision and triangulation, interferometry and phase shift principles. Basically, all these devices combine more than one of the cited imaging techniques to minimize the noise arising when scanning inside an oral cavity as, for example: noise related to the optical features of the target surfaces (translucency and the different reflectivity of target materials such as teeth, gums, preparations, resins, etc.), to wetness and to random relative motions. Also several typologies of structured light sources and optical components are employed. The analysed intra-oral scanning devices for restorative dentistry are listed below:

(1) CEREC® – by Sirona Dental System GmbH (Germany)
(2) iTero – by CADENT Ltd (Israel)
(3) E4D – by D4D TECHNOLOGIES, Llc (USA)
(4) Lava™C.O.S. – by 3M ESPE (USA)
(5) IOS FastScan – by IOS TECHNOLOGIES, Inc. (USA)
(6) MIA3d™ – by Densys3D Ltd (Israel)
(7) DPI-3D – by DIMENSIONAL PHOTONICS INTERNATIONAL, Inc. (USA)
(8) 3D Progress – by MHT S.p.A. (Italy) and MHT Optic Research AG (Switzerland)
(9) directScan – by HINT – ELS GmbH (Germany)
(10) trios – by 3SHAPE A/S (Denmark)
(11) Bluescan®-I – A●TRON3D® GmbH (Austria)

Only some of these are already commercially available. As already mentioned, even if a lot of advantages in taking

Please cite this article as: Logozzo S, et al. Recent advances in dental optics – Part I: 3D intraoral scanners for restorative dentistry. Opt Laser Eng (2013), http://dx.doi.org/10.1016/j.optlaseng.2013.07.017

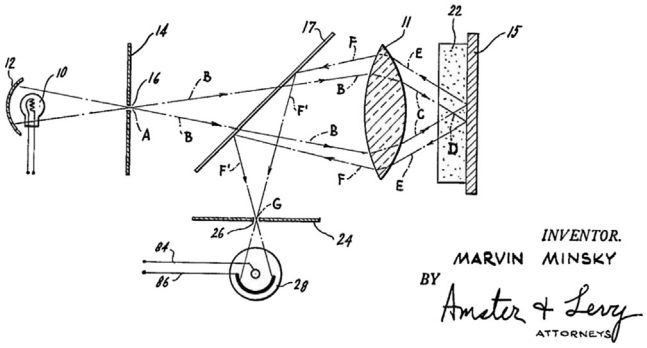

Fig. 4. Confocal microscopy principle [6].

digital impressions are achievable, also some disadvantages subsist. For example, it is often necessary to apply some coatings on the teeth (to minimize the noise of the measurement) and to rest the camera wand on a tooth to get a steady focus. Moreover, the 3D virtual model is often reconstructed by post-processing single images (acquired from a single perspective); accordingly the reconstruction is not performed in real time with a continuous data capture. Furthermore, data concerning the accuracy of the available instruments are often missing [1].

Some other new intra-oral scanners have been recently presented at International Dental Show 2013 in Cologne:

(12) Planscan – Planmeca Oy (Finland)
(13) Condor – Remedent Inc. (Belgium)
(14) CS 3500 – Carestream Health, Inc. (USA)
(15) DigImprint – Steinbichler Optotechnik GmbH (Germany)

Fig. 5. iTero digital impression system [2].

3. Confocal laser scanner microscopy and devices

Confocal laser scanning microscopy (CLSM or LSCM) is a technique to acquire in-focus images from selected depths, a process known as optical sectioning (high-resolution optical images with depth selectivity) [5]. Images are acquired point-by-point and reconstructed by a computer. By using this technique, one can reconstruct the surface profile of opaque specimens and obtain the interior imaging of non-opaque specimens.

A conventional microscope sees as far into the specimen as the light can penetrate, whereas a confocal microscope only images one depth level at a time.

The CLSM achieves a controlled and highly limited depth of focus.

The principle of confocal microscopy was originally patented by Marvin Minsky in 1961 [6], but it took another 30 years and the development of lasers for CLSM to become a standard technique, toward the end of the 1980s.

In a CLSM technique a laser beam passes through an aperture (14 in Fig. 4) and then is focused by an objective lens (11 in Fig. 4) into a small focal volume, within or on the surface of a specimen; in biological applications the specimen may be fluorescent. Scattered and reflected laser light, as well as any fluorescent light from the illuminated spot, is then re-collected by the objective lens.

A beam-splitter (17 in Fig. 4) separates off some portion of the light into the detection apparatus (28 in Fig. 4).

This apparatus, in fluorescence confocal microscopy, has also a filter, which selectively passes the fluorescent wavelengths while blocking the original excitation wavelength. After passing a pinhole (24 in Fig. 4), the light intensity is detected by a photodetection device (usually a photomultiplier tube (PMT) or avalanche photodiode (APD)), transforming the light signal into an electrical one which is recorded by a computer [7].

The limited detector aperture obstructs the light which is not coming from the focal point. The out-of-focus light is suppressed: most of the returning light is blocked by the pinhole, which results in sharper images than those from conventional fluorescence microscopy techniques and permits to obtain images of planes located at various depths within the sample (sets of such images are also known as 'z stacks') [5].

The detected light, originating from an illuminated volume element within the specimen, represents one pixel in the resulting image. The brightness of a resulting image pixel corresponds to the relative intensity of the respective detected light. The beam is scanned across the sample in the horizontal plane by using one or more servo-controlled oscillating mirrors.

Slower scans provide a better signal-to-noise ratio, resulting in better contrast and higher resolution. Information can be collected from different focal planes by raising or lowering the microscope stage or objective lens. The computer can generate a three-dimensional picture of a specimen by assembling a stack of these two-dimensional images, from successive focal planes [5].

3.1. iTero by CADENT LTD (IL)

The Cadent iTero digital impression system by Cadent LTD, IL (Fig. 5) came into the market in early 2007. iTero system employs a parallel confocal imaging technique (Fig. 6) [8]. As shown in Fig. 7, an array of incident red laser light beams (36), passing through a focusing optics (42) and a probing face, is projected onto the teeth.

Fig. 6. iTero's wand [2,9].

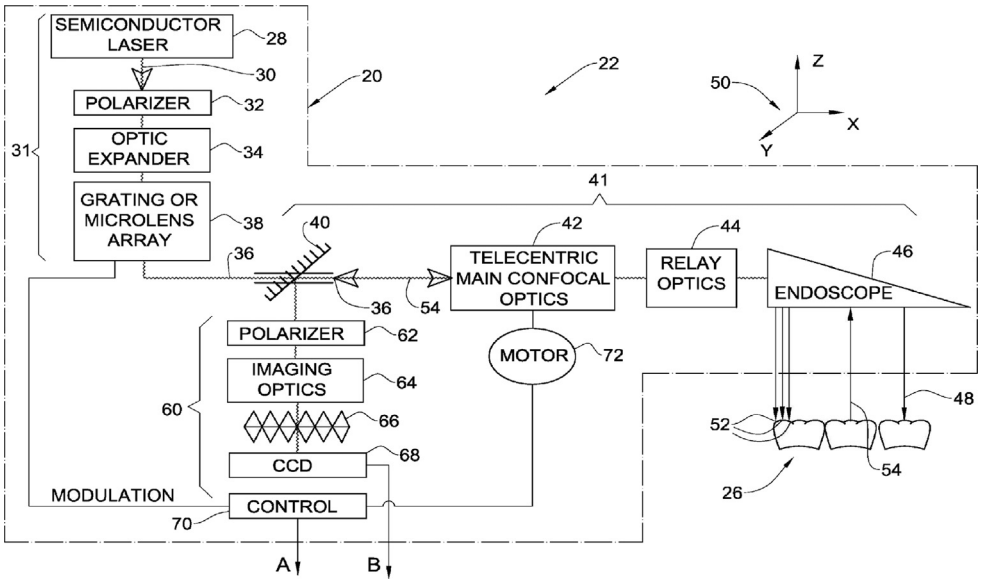

Fig. 7. iTero scanning system [8].

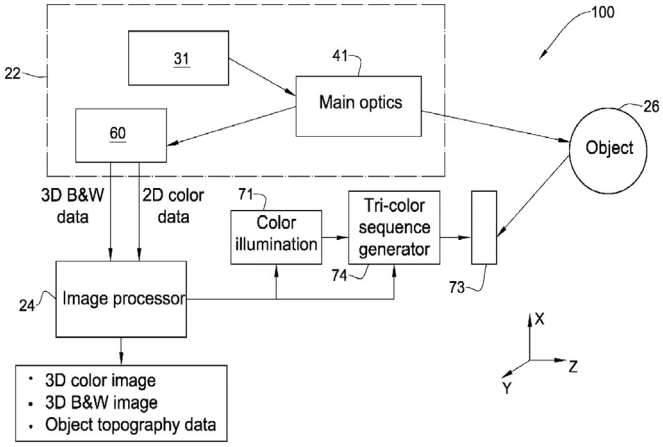

Fig. 8. iTero colour imaging system [11].

The focusing optics defines one or more focal planes beyond the probing face, in a position which can be tuned by a motor (72).

The beams generate illuminated spots on the structure and the intensity of returning light rays is measured for various positions of the focal plane. The topology of the three dimensional structure of the teeth is reconstructed on the basis of spot-specific positions yielding a maximum intensity of the reflected light beams (Fig. 7) [8,10].

This technique allows iTero capturing all structures and materials in the mouth, without the need to apply any coating to the patient's teeth [9]. The complete three-dimensional representation of the entire structure can be obtained assembling surface topologies of adjacent portions, taken at two or more different angular perspectives [10]. The iTero camera capability of scanning without the need of coating powders is advantageous, however it requires the addition of a colour wheel to the acquisition unit itself (Fig. 8), resulting in a camera with a larger scanner head, compared to the other systems [2]. In fact, also a two-dimensional (2D) colour image of the 3D structure of teeth is taken at the same angle and orientation with respect to the structure. As a consequence, each *X*–*Y* point on the 2D coloured image corresponds to one point on the 3D scan, having the same relative *X*–*Y* values. The coloured image (Fig. 8) is obtained illuminating the target surface with three beams having three complementary colours (red, green or blue light), and combining the respective monochromatic images to create a full colour image. The three beams are obtained from the same white light source, with colour filters. The filters are arranged as sectors of a rotatable disc, coupled to a motor [11]. Capturing the digital impression requires following a series of steps for every impression which the operator is guided through. These include five scans of the prepared area: occlusal, lingual, buccal, and interproximal contacts of the adjacent teeth [2], and require approximately 15 or 20 s per prepared tooth. Then buccal and lingual 45° angle views of the remaining teeth in the quadrant or arch and opposing arch are obtained. When these scans (at least

21) are complete, the patient is asked to close into centric occlusion and a virtual registration is scanned. Overall, complete upper and lower quadrant scans and the virtual bite registration can take less than 3 min time [2]. When the digital impression has been completed, the clinician can have a series of diagnostic tools to evaluate the preparation and to complete the impression itself. For example, a margin line tool is available to assist in the identification of clearly defined margin [12]. The completed digital impression is sent via a HIPAA-compliant wireless system to the Cadent facility and to the dental laboratory. Upon ratification of the laboratory, the digital file is output to a model by Cadent. Finally, the model is milled from a proprietary blended resin [2].

3.2. 3D Progress by MHT S.p.A. (IT) & MHT optic research AG (CH)

3D Progress, produced by MHT (Medical High Technologies) S.p.A (IT) and created by MHT Optic Research AG (CH), is a light-weight, portable, digital impression system which can be interfaced to a PC via USB 2.0 cable (Fig. 9). MHT Optic Research AG and MHT S.p.A were founded in 1995 by Markus Berner, a Swiss engineer, and Carlo Gobbetti, an Italian businessman and entrepreneur.

Besides being available for purchasing, in North America it will be also made available for a low monthly rental fee and commercialized by Clōn 3D Employee, as 'Progress IODIS (an acronym of Intra Oral Digital Impression System)'. Another authorized distributor is Oratio BV company, from Netherlands, which will commercialize this device as 'CYRTINA® Intraoral Scanner'. 3D Progress performs the digital impression, taking less than 1/10th of a second for a single scan, with an average scanning speed equal to 14 scan/second (depending on the PC); therefore, it can scan a full-arch in under 3 min. The scanner will not usually require powdering of the translucent surfaces, with the exception of highly reflective surfaces as, for example, implant scan abutments and markers. Scans are output first as a cloud of points and then, as a final output, as a usual STL format surface file, compatible with most CAD platforms. The main technical features of the 3D Progress components are as follows: a smart Pixel Sensor (which enables fast and accurate scanning), an automatic real time stitching of each single scan, the possibility to pause/stop the scan whenever required, automatic (or semi-automatic) margin line detection, a USB 2.0 PC connection. 3D Progress works as a confocal microscope combined with Moireé effect detector [14,1]. The focal plane is shifted translating a movable lens, located as far distal as possible to maximize the miniaturization of the optical system. Unlike the prior optical system, based on confocal microscope shown in Fig. 10, in 3D Progress (Fig. 11) it is the first lens (4), distal from the object, to be moved in three different positions (each identified as 4a, 4b and 4c) in order to shift the focal plane (7) on the object (6), to positions identified as (7a), (7b) and (7c), respectively. The light rays, generated by the illumination pattern (1) and reflected at each focal plane (7a), (7b) and (7c), pass through the lens assembly (4), (5) and the beam guidance means (8) and are deflected by the beam splitter (2), in the direction of the detector (3), where the image of the object 6 is detected in the focal plane 7.The movable lens is aspherical in order to guarantee the necessary imaging quality for all focal planes (7a), (7b) and (7c), thus the focal plane is not actually a plane, but a curved surface and the scanned surfaces appear distorted: flat surfaces and straight lines appear curved, and the magnification and curvatures are different for different positions in the image. These distortions can be compensated because the theoretical distortions are known, having been computed on a reference image. The curvatures can be well approximated by an analytical function, such as for example, a polynomial [14].

Fig. 9. 3D Progress portable system [13].

3.3. TRIOS™ by 3Shape A/S (DK)

In December 2010, 3Shape announced the launch of a new patient-friendly and high-performance intraoral scanning solution, named TRIOS™ (Fig. 12).

The TRIOS™ system works according to the principle of confocal microscopy, with a fast scanning time. The light source provides an illumination pattern producing a light oscillation on the object. This variation/oscillation may be spatial and/or it may be time varying. The system produces a variation of the focus plane of the pattern as well, over a range of focus plane positions, while maintaining a fixed spatial relation of the scanner to the

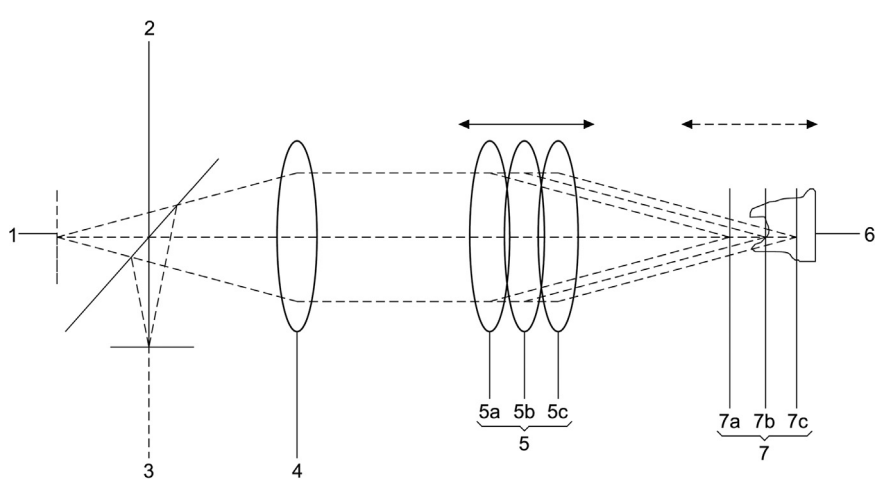

Fig. 10. Prior optical system based on *confocal microscope* [14].

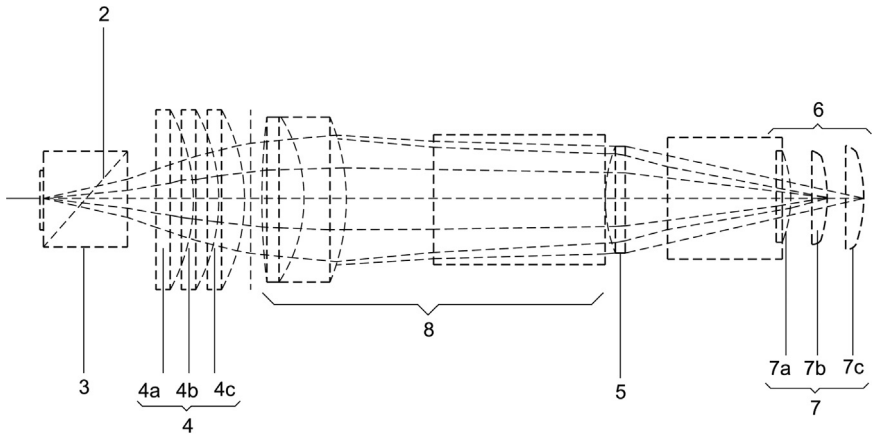

Fig. 11. Optics for a confocal microscope like 3D Progress [14].

Fig. 12. Trios' wand and cart [15].

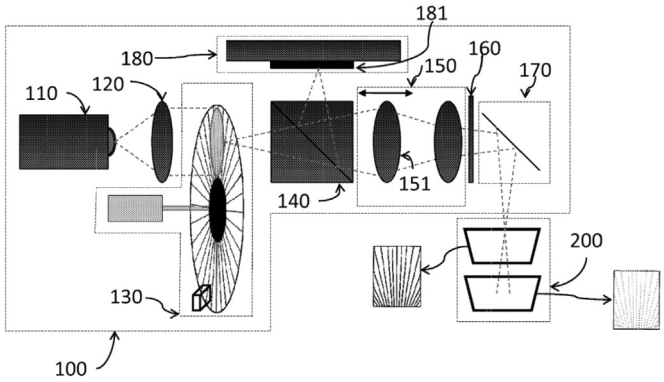

Fig. 13. Trios scanning system [16].

object (Fig. 13). When a time varying pattern is applied, a single sub-scan is actually the collection of a certain number of 2D images, corresponding to different positions of the focus plane and to their respective different time instances of the illumination pattern.

When the focus plane coincides with the scanned surface at certain pixel position, the pattern is projected onto the surface point in-focus and it has high contrast, thereby giving rise to a large amplitude variation of the pixel values over time. It is thus possible to identify specific settings of the focusing plane, which make each pixel to be in focus. In other words, it is possible to transform the contrast information vs. position of the focus plane into a 3D surface information, pixel by pixel. The third dimension of the scanned object is determined by finding the plane corresponding to a peak in the correlation measured for each sensor belonging to the camera's sensor array.

A peculiarity of this system is the variation of the focal plane position without moving the scanner in relation to the object being scanned. The focal plane should be continuously varied in a periodic fashion with a predefined frequency, while the pattern generation means, the camera, the optical system and the object being scanned fixed in relation to each other. Further, the 3D surface acquisition time should be small enough to reduce the bias produced by involuntary relative movements between the probe and the teeth [16]. The scanning system has the property of telecentricity in the space of the object being scanned and this property as well as magnification scale can be maintained while shifting the focal plane.

4. Triangulation techniques and devices

Triangulation is a non-contact technique for digitally collecting data of the shape of a 3D object and constructing digital 3D models, for a wide variety of applications. Both passive and active triangulation techniques may be used. In active triangulation methods, a light radiation is projected onto the scene, and its reflection is acquired in order to calculate the position of the target object. In passive triangulation methods no kind of radiation is emitted by the scanning device itself and the system is based on detecting reflected ambient radiation.

Passive triangulation is also called passive stereovision and uses photogrammetric algorithms. This technique is based on processing of two stereo images, obtained from two cameras, whose respective positions and angulations are known (Fig. 15). This information is needed in order to identify points with corresponding features on the two images and to apply triangulation, with respect to the same corresponding points on the epipolar line; the algorithms are based on the epipolar geometry (Fig. 14).

Passive triangulation provides the highest accuracy among vision systems of this type. However, only high contrast targets and well defined edges can be measured with high accuracy. Using three cameras the ambiguity can be reduced.

Untargeted, or featureless, surfaces may not be measured at all. In addition, the ambient light affects significantly the ability of the system to successfully extract all desired features, unless controlled lighting is used [17]. The main advantage is the low cost of these systems, made of few and cheap components; furthermore, also the working principle is simple, the same as in the human eye.

In active triangulation, a light beam generated by a laser is deflected by a mirror and scanned on the target object. Fig. 16 shows a block diagram of a 2D active triangulation system. A camera, composed of a lens and a position sensitive photo-detector, measures the location of the image of the illuminated point on the object. The laser dot appears at different places in the camera's field of view, depending on how far away the laser strikes the surface, (Fig. 17). This technique is called triangulation because the laser dot, the camera and the laser emitter form a triangle. The distance d between the camera and the laser emitter is known, it is called baseline distance and it corresponds with one side of the triangle. The angle θ of the laser emitter corner is also known. The angle Φ of the camera corner can be determined by looking at the location of the laser dot in the camera's field of view. These three data fully determine the shape and size of the triangle and gives the location (X, Y, Z coordinates) of the laser dot corner of the triangle, by simple trigonometric calculations [17]. In most cases, a laser stripe, a grid or

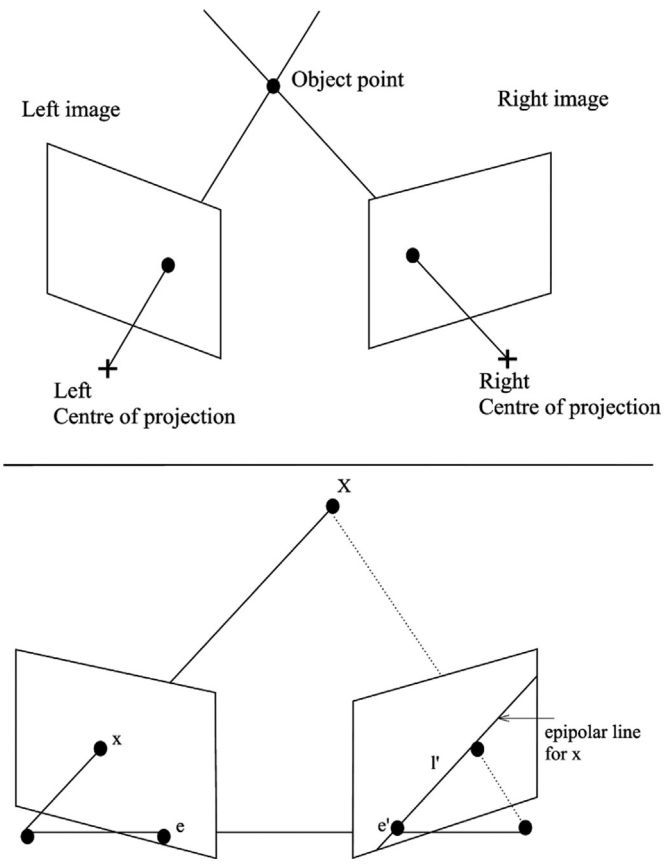

Fig. 14. Passive triangulation method.

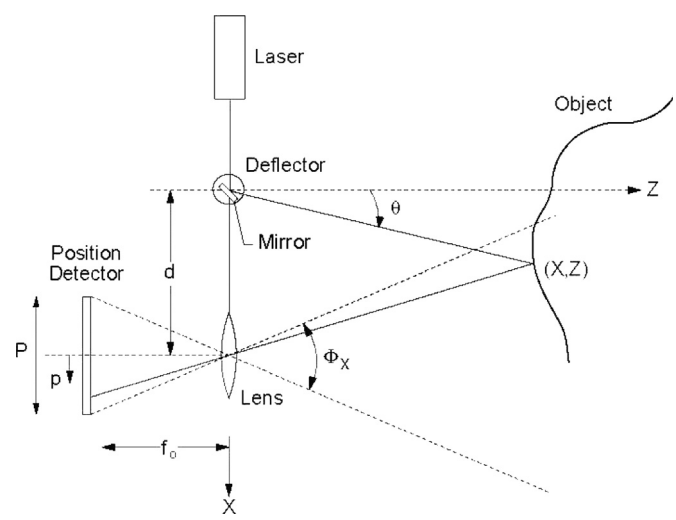

Fig. 16. 2D active triangulation method [17].

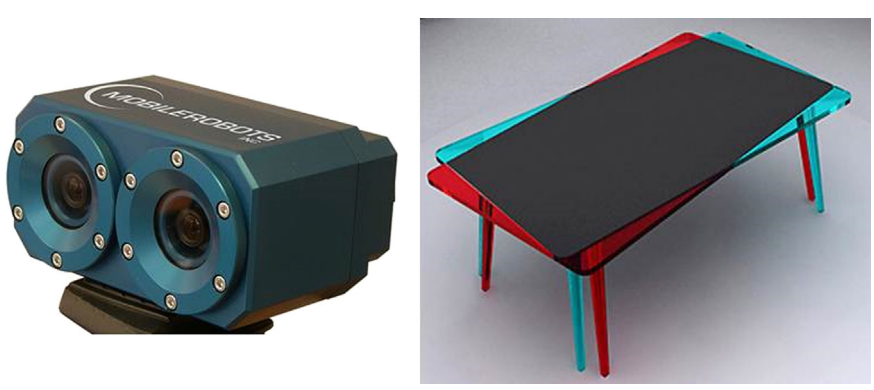

Fig. 15. Stereo images and cameras.

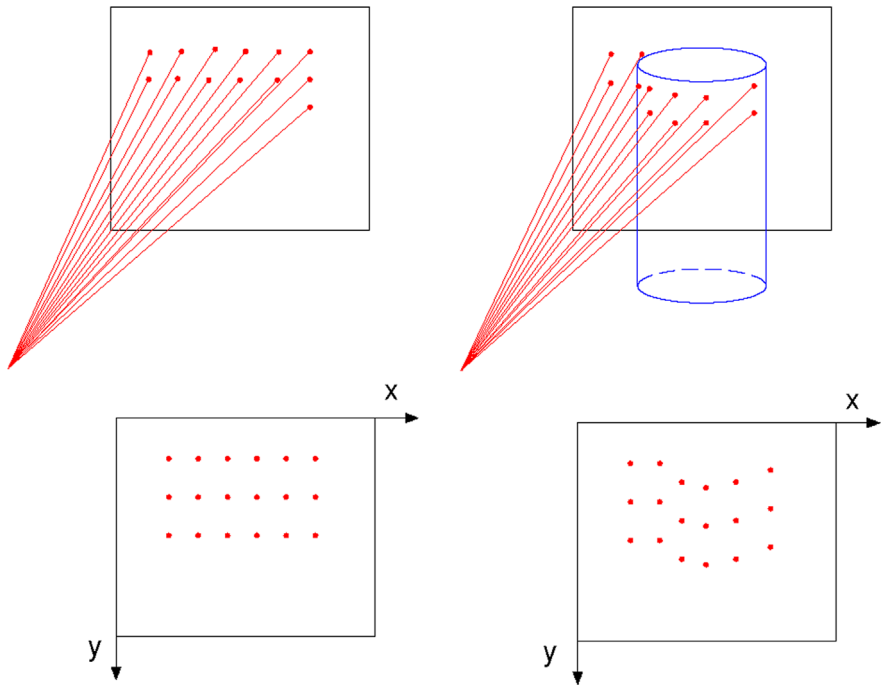

Fig. 17. Camera's field of view in active triangulation method.

a series of patterns, instead of one single laser dot, are swept across the object to speed up the acquisition process.

The measuring accuracy of this method depends on several parameters. The accuracy error in the estimation of the distance (Z) is inversely proportional to both the distance between the laser and the position detector (baseline d) and the distance between the effective position of the lens and the position detector (f_0). Unfortunately, neither f_0 nor d can be made large. Distance d is limited by the mechanical structure of the optical setup and by the arising of shadow effects [18]. The accuracy also improves increasing the number of pixels (photosensitive elements) of the camera and for shorter measuring distances [19]: the error of accuracy in the estimation of the distance Z is directly proportional to the square of the distance itself [18]. The total error of accuracy can be roughly estimated to be proportional to the working volume (a typical value is 1000:1).

A major problem affecting all triangulation methods is occlusion; it takes place whenever an area of the target surface is invisible to both, or either of, the laser (laser occlusion) and the camera (camera occlusion). A theoretical solution is keeping the triangulation angle as small as possible, but the result would lose in terms of accuracy. So a good balance between minimal occlusion and good accuracy must be reached. The measure accuracy is also affected by the surface reflectivity of measured objects [19].

4.1. CEREC® by Sirona dental system GMBH (DE)

CEREC® (an acronym for Chairside Economical Restoration of Esthetic Ceramics) was introduced by Sirona Dental System GMBH (DE) in 1987 and it has undergone a series of technological improvements, culminating in the CEREC AC®, powered by BlueCam®, launched in January 2009.

The latest versions of the CEREC® system (Fig. 18) are capable of producing inlays, onlays, crowns, laminate veneers, and even bridges and combine a 3D digital scanner with a milling unit, to create in-office dental restorations from commercially available blocks of ceramic or composite material, in one single appointment [2].

The latest version of the milling centre, CEREC inLab® MC XL is capable of milling a crown in as short as 4 min. CEREC® systems may be described as measurement devices which operate according to the basic principles of confocal microscopy [4,24], and according to the active triangulation technique [4,25] and [26]. A camera projects a changing pattern of blue light onto the object (Fig. 18), using projection grids, which have a transmittance random distribution, and which are formed by sub-regions, containing transparent and opaque structures [27].

Moreover, it is possible, for each acquired profile, to define a specific relationships between the light characteristic and the optical distance of the image plane from the imaging optics [4,24], thanks to elements designed for varying the length of the optical path.

A light source (3) (Fig. 19) produces an illumination beam (7.1, 7.2, 7.3), that is focused onto the surface of the target object (2). An image sensor (6) receives the observation beam (9.1, 9.2, 9.3) reflected by the surface of the target object. A focusing system (5) focuses the observation beam onto the image sensor (6). The light source (3) is actually made of various units (3.1, 3.2, 3.3), which can be independently regulated in terms of light intensity [26]. Thus, the intensity of the light detected by each sensor element is a direct measure of the distance between the scan head and a corresponding point on the target object [4]. A critical aspect of the system is that the triangulation technique requires a uniform reflective surface, and different materials (as dentin, amalgam, resins, gums) reflect light differently. Therefore, it is necessary to coat the teeth with suitable powders, before the scanning stage, to make the reflectivity of the surfaces uniform.

The earlier versions of CEREC® employed an acquisition camera with an infrared laser light source. The latest version employs blue light-emitting diodes (LEDs) (Fig. 18); the shorter-wavelength, intense, blue light allows reaching a greater accuracy. The images are distortion-free, even at the periphery, so that multiple images (e.g. of a complete quadrant) can be stitched together with great accuracy. The CEREC® AC Bluecam boasts an automatic shake detection system, which let the images to be acquired only if the camera is absolutely still. It is possible to capture a complete half arch in less than a minute. The new CEREC® AC Bluecam offers image stabilization systems. It implies that the practitioner does not have to rest the camera wand on a tooth to get a steady focus: the camera automatically captures an image, when the wand is

Fig. 18. CEREC system, wand and in-office milling unit [20–23].

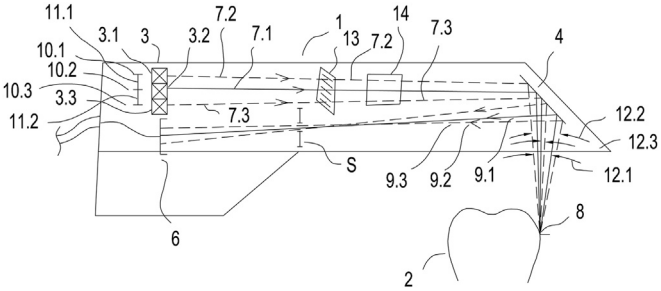

Fig. 19. CEREC scanning principle [26].

Fig. 20. IOS FastScan system and wand [28,29].

motionless, avoiding the need of an apposite switch (like the pedal button in the previous model). Furthermore, it is now possible to scan full arches, whereas earlier versions of the device got one single image from each perspective. At the end of the scanning stage, the preparation is shown on the monitor and can be viewed in different perspectives to focus or magnify areas of the preparation. The 'die' is virtually cut on the virtual model and the finish line is delineated by the dentist directly on the image of the die on the monitor screen. Then, a CAD system, called 'biogeneric', provides the model of a possible restoration and the dentist can make adjustments to the proposed design, using a number of simple and intuitive on-screen tools. Once the dentist is satisfied with the restoration, he can mount a block of ceramic or composite material of the desired shade in the milling unit to proceed with the fabrication of the physical restoration. During the design stage of the process, colour-coded tools can be used in order to determine the degree of interproximal contact, therefore finished restorations will require minimal, if any, adjustments before cementation. If the dentist has a standalone CEREC AC® system and he cannot perform in-office fabrications of restorations, he can forward the digital impression data directly to the dental laboratory, using CEREC Connect® [2].

4.2. IOS FastScan™ by IOS Technologies Inc. (US)

IOS Technologies, Inc. was founded in early 2007, with the objective of commercializing its proprietary intra-oral scanning and digital impression technology. IOS Technologies is currently in the final development stage of IOS FastScan™ Digital Impression and Modelling System (Fig. 20) and, in July 2010, it announced the IOS FastScan intraoral digital scanner had been advanced from the prototype to the production version and it was giving positive results in clinical beta testing.

The system's major advantage over competitors is its wand (Fig. 20): the IOS FastScan™ is the only system in which the camera is able to move within the wand. The dentist only has to hold the wand in three positions (buccal, lingual and occlusal) to scan full arch because IOS FastScan laser moves automatically on a track within the wand [9]. IOS FastScan can be used as a standalone scanner, or it can be provided with an in-office milling unit. IOS FastScan specializes in outputting data in sterolithography (STL) format, an open source data format that all the laboratories can recognize, open and manipulate. IOS FastScan gives the dentist the option of sending data to IOS Laboratories to create a model, at a charge of about $10 for each virtual impression; however the dentist can also send the virtual impression to his favourite laboratory. IOS FastScan system is based on the principle of active triangulation according to Schleimpflug imaging principle with sheet of light projection [30]. Fig. 21 shows an

Exhibit 1011 page 11 of 20
DENTAL IMAGING

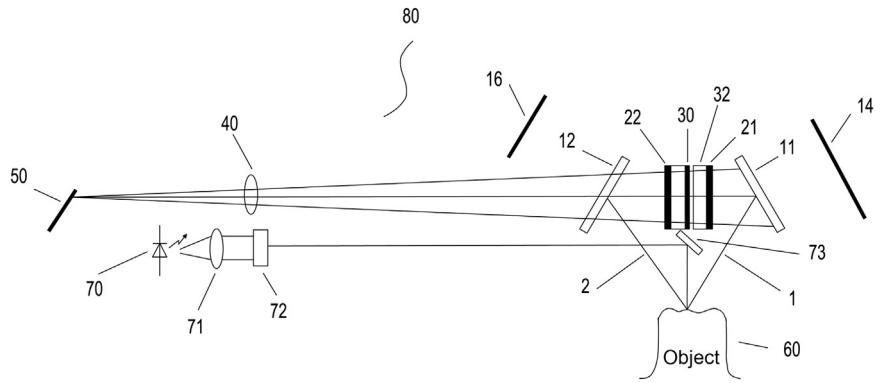

Fig. 21. IOS FastScan scanning head's principle [30].

Fig. 22. MIA3d™ station and wand [33].

exemplary dental scanner head (80) that uses a polarizing multiplexer as in IOS FastScan™ system.

The wand projects a laser sheet onto the teeth (60) and, then, it utilizes the polarizing multiplexer to optically combine multiple views of the profile, illuminated by the sheet of laser light. The scanner head (80) uses a laser diode (70) to create a laser beam that passes through a collimating lens (71), which is followed by a sheet generator lens (72), which converts the beam of laser light into a sheet of laser light. The sheet of laser light is reflected by the folding mirror (73) and illuminates the surface of the target tooth (60). The system combines the light coming from two different perspectives onto a single camera, using passive or active triangulation [30]. The system can be configured to make the lateral resolution independent from the depth of field: in detail, the imaging system orientation must satisfy the Scheimpflug principle [31]. The Scheimpflug principle is a geometric rule that defines the orientation of the plane of focus of an optical system, where the lens plane is not parallel to the image plane. The 3D scanner probe sweeps a sheet of light across one or more surfaces of teeth, while the light projector and imaging aperture rapidly moves back and forth along all or part of the full scan path; a live 3D preview of the digital model of the scanned dentition is displayed approximately in real-time. This preview provides a feedback on how the probe is positioned and oriented, with respect to the patient's dentition [31]. IOS FastScan™ includes a scanner to capture colour and translucency information along with the three dimensional shape of dentition. The system also includes a computer aided design (CAD) module to receive the colour and translucency information and the 3D shape, to render a coloured accurate representation of the prosthesis. The colour, translucency and surface information are combined in a single digital prescription, which is electronically transferred to a laboratory or CAD/CAM system for fabrication [32]. The virtual model can be trimmed, the margin can be marked and the die can be quickly and easily ditched, using the IOS FastScan™ Dental CAD software.

4.3. MIA3d™ by Densys3D LTD (IL)

MIA3d™ is a chair-side, standalone unit, including a PC, a flat screen and a small hand held intra-oral camera, created by Densys3D LTD (Migdal Ha'Emeq, Israel). In February 2007, Densys3D announced that it would introduce a new intra-oral camera and system, for orthodontics and restorative applications, with a very fast scanning system, where the acquisition of a picture would take only milliseconds and the dentist could map the patient's mouth within 90 s.

In June 2007, Densys3D started clinical trials on its new intra-oral camera and system, which, at that time, had undergone only laboratory tests; an average accuracy equal to 30 μm was achieved. Densys3D launched the MIA3d system for the American market at the Midwinter Chicago Dental Show, in February 2012 (Fig. 22).

The camera arm uses visible light and produces a small ASCII file, enabling open file architecture, for easy integration to third party CAD/CAM machines. The scanning system has the smallest and lightest wand in the market, weighing approximately 100 g. Densys claims that its scanning system has the easiest to use software in the market, the fastest computation and the most accurate and robust wand in the market, with full interproximal scan coverage.

Using this system, dentists will be able to create and store small-sized files in real-time, and these files are ready for immediate export to an in-house CAD/CAM system or to a remote CAD/CAM system, located in a laboratory. Densys3d system employs the principle of active stereo-photogrammetry with structured light projection. The intra-oral scene is illuminated by a 2D array of structured illumination; basically, this can come from a photographic slide, and projects

Fig. 23. Hint-ELs® directScan's wand [35].

a 2D array of patterns over the intraoral scene. 3D models are obtained from single images, by triangulation with a stored image of the structured illumination projected onto a reference surface, such as a plane. More in detail, the intra-oral scene is first illuminated by a 2D image of structured illumination, projected from a first perspective with respect to the intra-oral scene. Then, the camera is moved, and a second image is obtained from a different perspective. The structured illumination. The 'z' information for each image is obtained performing a triangulation with a reference image, taken from the same perspective, when the structured illumination pattern was projected onto a reference plane. In order to unambiguously match corresponding points in the image of the intra-oral scene and in the stored image, the points of the structured illumination are spatially modulated with two-dimensional random patterns [34].

The goals of the employed technology are to facilitate 3D intra-oral modelling for dental applications, while requiring minimal apparatus and without relying on surface detail of the objects to be modelled and to minimize the effect of movement of the patient, the practitioner, and the apparatus, during the procedure of 3D intra-oral imaging.

4.4. DirectScan by HINT – ELS GMBH (DE)

The Hint-ELs® GmbH was founded in 2000. The first serial product of the Hint-ELs® DentaCad System was introduced in 1998. Hint-ELs® digitizer systems (HiScan and HiScanμ) were developed in co-operation with the Fraunhofer Institute for Applied Optics and Precision Engineering, Jena (Germany) (Fig. 24). The measuring system is based on the principle of human stereoscopic vision and on the principle of the linear projection: if straight lines are projected onto an object, the lines will be curved around the object. This distortion of the lines allows conclusions to be drawn about the surface contour. The goal of this development has been a system for the exact measurement of single teeth as well as complete arches so, at the end of 2010, the company Hint-ELs® announced, the launch of its directScan, for the first quarter of 2011 (Fig. 23).

Hint-ELs® DirectScan offers a measurement accuracy in the range 12–15 μm, thus resulting more precise with respect to many of the 'popular' desktop scanning. The optical scanner takes a rapid sequence of pictures from various angles, every 200 ms, recording the surface and shape of every tooth or gap. The dentist then inputs the images into a 3D software, which conducts a pixel-precise comparison, to map the patient's mouth. The output data of the intra-oral scanner can be the standard STL file format and can be processed by CAD/CAM components of Hint-ELs or by other open systems. Scan data can also be automatically transferred via internet to a partner laboratory, equipped with a CAM machine. The design software includes a virtual articulator and allows the modelling of full anatomical inlays, crowns and large-span bridges. [1].

4.5. Bluescan®-I – A.TRON3D® GMBH (AT)

Bluescan-I has been developed in cooperation with the largest, independent Austrian Research Institute (AIT) and is a highly

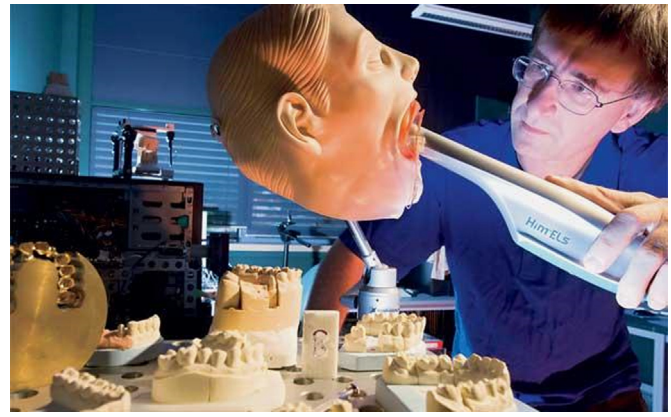

Fig. 24. Researcher Peter Kuhmstedt scans a mouth's model at Fraunhofer Institute [36].

Fig. 25. Bluescan®-I wand [37].

complex optic measurement-system which takes 8–15 stereo-images per second. In this system, taking impressions of teeth is like taking a video with an easy and free-moving hand piece with integrated optics (Fig. 25).

Thanks to an anti-shake protection, the camera does not have to be held still and calibrated; the camera head is warmed by body heat and internal electrics to prevent fogging; it produces high-definition and very high resolution real-time images in just milliseconds with. The wand is really small and light. Low size STL file is available for further process. No spray or powder is required with the Bluescan-I [37].

Bluescan-I operates according to active stereoscopic vision principle [38]. Side (11) (see Fig. 26) faces the target object (10), and it bears an open window, which is sealed by a disk (13). The light beam (23) comes from projector (14), and passes through one or more transparent slides, on which a pattern, arranged according to a random principle, is arranged; this pattern preferably consists of essentially randomly distributed, optionally irregularly formed points and/or lines. In the path of the light beam (23), there is a deflection mirror (26), which deflects one part (23a) of the light beam (23) to a first mirror (27), which subsequently directs the light to the object (10). Another part (23b) of the light beam (23) strikes a second mirror (28) before being directed to the object (10). Both beams (23a) and (23b) pass through disk (13).

The optical axes (29), (30) of the mirrors (27), (28), are incident, therefore the object (10) is illuminated from different directions. Oral scans are performed by a camera system which consists of two cameras (32), which record stereoscopic images for the three-dimensional measurement of the object (10), according to [38].

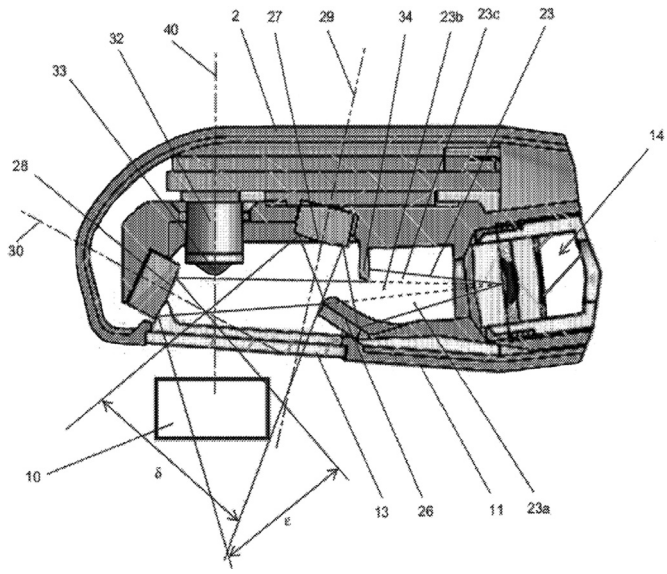

Fig. 26. Bluescan®-I principle [38].

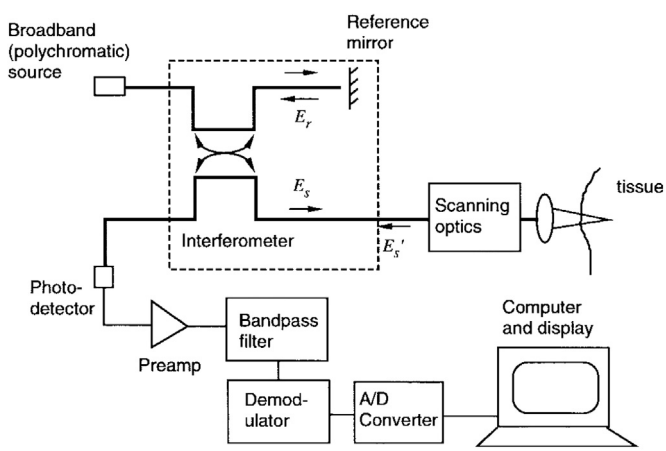

Fig. 27. Blocks diagram of an OCT system [39].

5. Optical coherent tomography and devices

OCT is an interferometric imaging technique which provides cross-sectional views of the subsurface microstructure of target objects, like biological tissues [39]. As shown in Fig. 27, the interferometer in an OCT scanner splits a broadband source field into a reference field (*Er*) and into a sample field (*Es*). The sample field focuses through the scanning optics and objective lens, to some point below the surface of the tissue. The modified sample field (*Es′*), scattered back from the tissue, interfers with *Er*, on the surface of the photo-detector.

The resulting interference fringes can be different, depending on how close *Es′* and Er temporal and spatial characteristics are. Thus, the interferometer works as a cross correlator and the amplitude of the interference signal, generated performing an integration on the surface of the detector, provides a measure of cross-correlation amplitude.

When the OCT system is used to analyse an inner section of a tissue the system needs to operate in a spectral range providing sufficient penetration of light (that is the near-infrared range). OCT imaging would be limited to superficial layers less than a few hundred micrometres thick, if a source emitting at wavelengths in the blue and ultraviolet would be used: the mean scattering length of photons in tissue at these spectral regions is very short. Thus this spectral range should be used to analyse the surface of the target tissue. The

Fig. 28. E4D Dentist's system, wand and milling unit [40].

optimum source wavelength, for a given application, cannot be determined exclusively by considerations concerning the penetration depth. Backscatter contrast and optical absorption are wavelength-dependent variables, which may also play a role in determining the contrast of OCT images. According to the equations and principles of OCT [39], the interference signal is proportional to the square root of the power reflected from the target and the broader the emission bandwidth of the source is, the better resolution and contrast can be achieved.

5.1. E4D by D4D Technologies LLC (US)

The E4D Dentist system was introduced by D4D Technologies LLC (Richardson, TX) in early 2008. It consists of a cart, containing the design centre (computer and monitor), a laser scanner head, and a separate milling unit (Fig. 28).

The IntraOral Digitizer is configured as an optical coherence tomography (OCT) or confocal sensor. The laser digitizer includes a laser source coupled to a fibre optic cable, a coupler and a detector (Fig. 29). The coupler splits the light from the light source into two paths. The first path leads to the imaging optics, which focuses the beam onto a scanner mirror, which deflects the light to the surface of the prepared tooth (DISEGNARLOXX). The second path of light from the light source is directed towards the optical delay line and to the reflector. This second path of light (reference path) has a controlled and known path length, determined by the parameters of the optical delay line. The light reflected by the surface of the object, returns via the scanner mirror and is combined by the coupler with the reference path light, coming from the optical delay line. The combined light is coupled to an imaging system and to the imaging optics via fibre optic cables.

The laser digitizer may provide an Optical Coherence Tomography (OCT) sensor or a Low Coherence Reflectometry sensor by utilizing a low coherence light source and varying the reference path at known values. The focusing optics is placed on a positioning device in order to alter the focusing position of the laser beam and to operate as a confocal sensor [41]. A series of imaged laser segments on the object, from a single sample position, interlace with two or multiple 3D maps of the sample, from essentially the same sample position. The time period to measure each interlaced 3D map, is short in order to minimize relative motion effects between the intra-oral device and the patient. The interlaced 3D maps may be aligned via software to

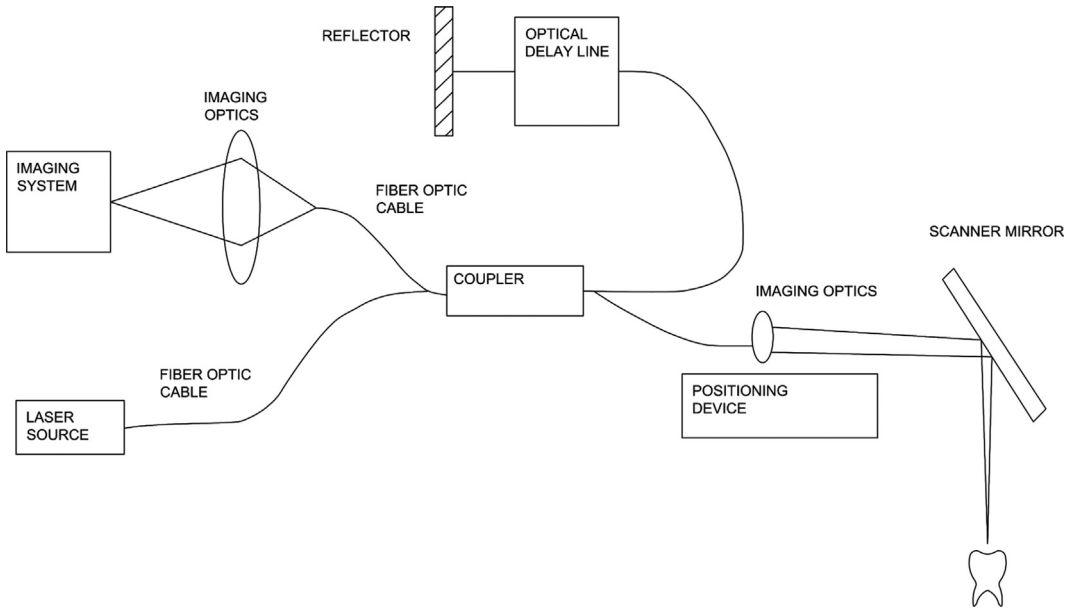

Fig. 29. E4D working principle [41].

produce a dense 3D cloud of points, unbiased by motion artefacts. The motion of the operator between each sub-frame may be tracked mathematically through reference points in the dataset itself. The operator motion is compensated in subsequent analysis [41]. The E4D does not require the use of a reflective agent (powder) to enable the capture of fine detail on the target site, in most cases. The scanner must be held at a specific distance from the surface being scanned: this is achieved with the help of rubber-tipped 'boots', which protrude from the head of the scanner [2]. The user holds down the foot pedal while centring the image and, when the desired area is centred on the on-screen bulls eye, the pedal is released and the image is captured. A diagram on the monitor shows the user how to orient the scanner, in order to obtain the next image. As successive pictures are taken, they are wrapped around the 3D model, to create a model, called by the company 'ICEverythingTM model'. The touch screen monitor enables the dentist to view the preparation from various angles and assess its accuracy. It is not necessary to scan the opposing arch. An occlusal registration is created with impression material, it is trimmed, and then it is placed on the top of the prepared tooth. The scanner captures a combination of the registration material and the neighbouring teeth, not covered by the material. This data is used to design restorations with proper occlusal heights. The design system of the E4D is then capable of auto detecting and marking the finish line on the preparation. Once this landmark is approved by the dentist, the computer uses its Autogenesis™ feature to propose a restoration, chosen from its anatomical libraries. As with the CEREC® system, the operator is provided with a number of intuitive tools to modify the restoration proposal. When the final restoration is approved, the design centre transmits the data to the milling machine, so the dentist is able to fabricate the completed restoration [2].

6. Accordion fringe interferometry and devices

Accordion Fringe Interferometry (AFI) is a technology which extends the traditional linear laser interferometry to three dimensions.

The original work on AFI was done at the MIT Lincoln Laboratory (the Federally Funded Research and Development Center of the Massachusetts Institute of Technology (MIT)).

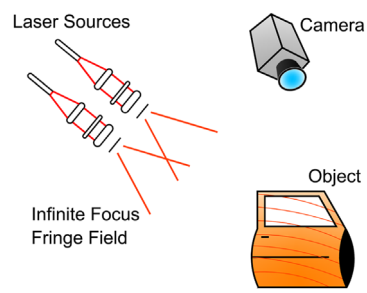

Fig. 30. AFI working principle [42].

In accordion fringe interferometry, two point sources illuminate the object and create an interference fringe pattern. A high precision digital camera is used to record the curvature of the fringes, from a viewpoint offset from the projector (Fig. 30). The degree of apparent fringe curvature, coupled with the known geometries between the camera and laser source, enable the AFI algorithms to digitize the surface of the object being imaged. AFI-based imagers record an *X*, *Y*, *Z* surface point location for every pixel in the camera [42].

The AFI technology employs laser light and uses the interference pattern created from multiple laser sources, to generate a perfectly focused and highly accurate fringe pattern on the target object. Fig. 31 shows the interference pattern, created when the laser light passes through two thin slits.

AFI offers many advantages over 'white light' scanners, which include: less sensitivity to ambient light noise and variations, super accurate fringe patterns, infinite projector depth of field, enhanced ability to image machined (shiny) surfaces, and enhanced ability to capture images without targets and photogrammetric systems.

6.1. DPI – 3D by dimensional photonics international, Inc. (US)

Dimensional Photonics International, Inc. (DPI) is a leading developer of advanced three-dimensional (3D) measurement and shape capture technology. Originally conceived at Massachusetts Institute of Technology (MIT) Lincoln Laboratory in the late 1990s, the proprietary technology is today among the most accurate and versatile 3D scanning technologies.

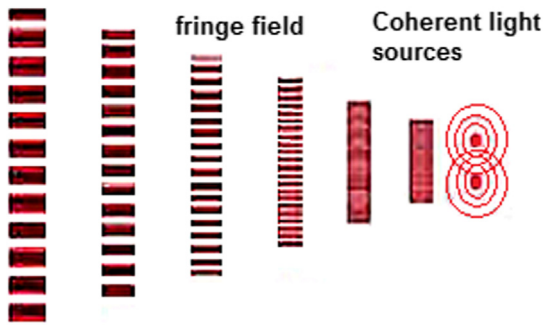

Fig. 31. AFI interference pattern when laser light is passed through two thin slits [42].

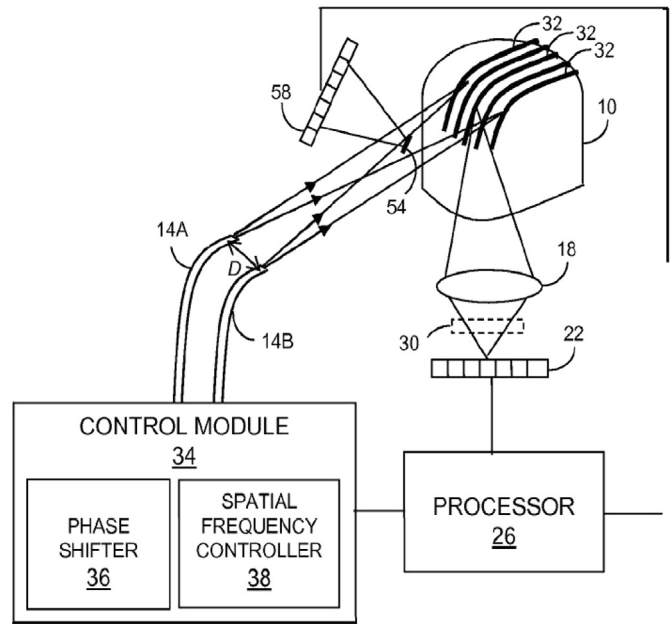

Fig. 32. DPI-3D imaging device [43].

The company's latest development efforts have been focused on DPI/O, a small, handheld, real-time, intra-oral scanner for digital impressions. Of course, DPI's proprietary technology does not require the use of powder to accurately capture the topography of single teeth or a full arch. The device is passing the prototype testing phase and it is not still available on the market. DPI – 3D is an accordion fringe interferometry (AFI) principle based intra-oral imaging system [43]. It is compact and substantially insensitive to relative motion between the device and the objects to be measured.

A peculiarity of this device is that coherent point sources of radiation are not generated through a grating and a lens, but form the interference pattern produced by a pair of single mode optical fibres (Fig. 32 and 33). Therefore the phase of the radiation emitted from the exit ends of the two optical fibres, can be changed in few microseconds or less by a fibre-based phase shifter, and there is no need to move the macroscopic grating, an operation requiring several milliseconds or more. Optical radiation, scattered from surfaces and subsurface regions of illuminated objects, is received by a detector array, which generates electrical signals as a response to the received radiation. A processor receives the electrical signals and calculates the three-dimensional position information of object surfaces from the phase shift between the emitted optical radiation and the received optical radiation. The source of optical radiation has a wavelength between about 350 nm and 500 nm to reduce the measurement error produced by the penetration of the incident radiation into subsurface regions of translucent objects [43].

Fig. 33. The interference pattern created by AFI technology [44-45].

7. Active wavefront sampling and devices

Active Wavefront Sampling (AWS) is a 3D surface imaging technique, which uses only a single camera and an AWS module. In its simplest form, an AWS module is an off-axis aperture which moves on a circular path around the optical axis (Fig. 34). This movement produces the rotation of target points on a circle on the image plane (assuming to realize ideal non-aberrated conditions). The target points depth information can be derived from the radius of the circular point pattern produced by each point (the blur-circle-radii generated by the rotating AWS module).

In principle, AWS imaging allows any system with a digital camera to function in 3D. Thus it eliminates the need for multiple cameras to acquire 3D geometries. Obviously, the most important characteristic of an AWS system is that it requires only one optical path to capture depth information. Potential applications are 3D endoscopy and microscopy.

7.1. *Lava™ Chairside oral scanner (C.O.S.) by 3M ESPE (US)*

The Lava™ Chairside Oral Scanner (C.O.S.) was created at Brontes Technologies in Lexington, Massachusetts, and was acquired by 3M ESPE (St. Paul, MN) in October 2006. The product was officially launched in February 2008. The Lava C.O.S. system (Fig. 35) consists of a mobile cart containing a CPU, a touch screen display, and a scanning wand.

The Lava C.O.S. camera contains a highly complex optical system comprised of 22 lens systems and 192 blue LED cells. The Lava C.O.S. wand has a 13.2-mm wide tip and weighs 390 g (Fig. 35) [2].

The Lava C.O.S. has introduced a method of capturing 3D data based on the principle of active wavefront sampling with structured light projection. This scanning method has been named '3D-in-Motion technology' by 3M ESPE.

This scanning system provides an active three-dimensional imaging system, which includes an off-axis rotating aperture element placed either in the illumination path or in the imaging path of an optical apparatus. Fig. 36 illustrates the principle of a three-dimensional imaging system having an off-axis aperture in the imaging path [50].

To understand the theory employed in the Lava™ C.O.S. imaging systems, Fig. 37 illustrates the concept of measuring out-of-plane coordinates of object points, by sampling the optical wave-front, with

Please cite this article as: Logozzo S, et al. Recent advances in dental optics – Part I: 3D intraoral scanners for restorative dentistry. Opt Laser Eng (2013), http://dx.doi.org/10.1016/j.optlaseng.2013.07.017

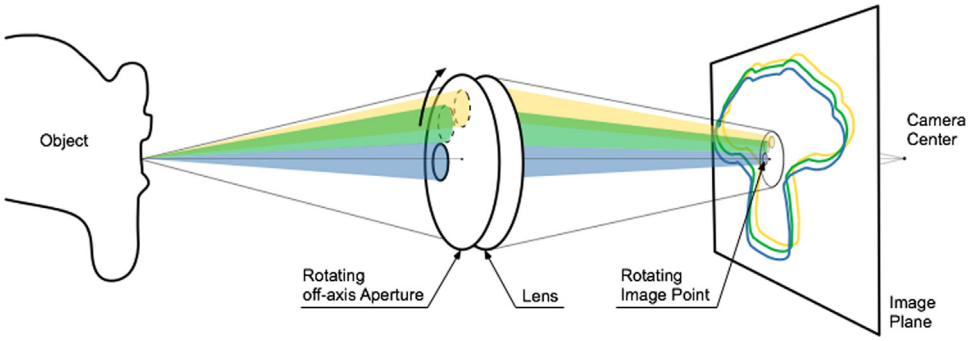

Fig. 34. Active wavefront sampling principle [46].

Fig. 35. Lava C.O.S system, wand and a SLA model by 3M, [47–49].

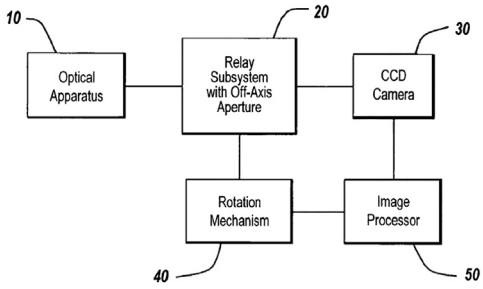

Fig. 36. Blocks diagram of Lava C.O.S system [50].

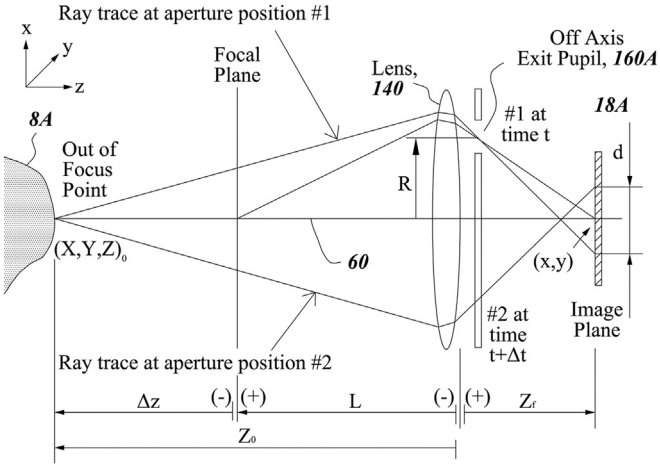

Fig. 37. AWS principle applied in Lava C.O.S. [50].

an off-axis rotating aperture element, and measuring the defocus blur diameter.

The system includes a lens (1 4 0), a rotating aperture element (1 6 0) and an image plane (18 A). R is the radius of the circular path followed by the off-axis pupil, and d is the diameter of the circle tracked by the image of the out-of-focus point on the image plane (18 A). The single aperture avoids overlapping of images from different object regions, hence it increases spatial resolution. The rotating aperture allows taking images at several aperture positions and this can be interpreted as having several cameras with different viewpoints, which generally increases measurement sensitivity. The aperture movement makes it possible to record on a CCD element a single exposed image at different aperture locations. Localized cross-correlation can be applied for image processing, to assess image disparity between frames. As shown in Fig. 37, at least two image recordings on the image plane (18 A)

Table 1
Comparison of technical data of intraoral scanning systems [1].

Intraoral scanner	Company	Working principles	Light source	Imaging type	Necessity of coating	In-office milling	Output format	Commercial availability
CEREC®AC-Bluecam	Sirona Dental System GMBH (DE)	Active triangulation and confocal microscopy	Blue light	Multiple images	Yes – titanium dioxide	Yes	Proprietary	Available
iTero	Cadent LTD (IL)	Parallel confocal microscopy	Red Laser	Multiple images	None	No	Proprietary and STL	Available
E4D	D4D Technologies, LLC (US)	Optical coherence tomography and confocal microscopy	Laser	Multiple images	Occasionally	Yes	Proprietary	Available
Lava™C.O.S.	3M ESPE (US)	Active wavefront sampling	Pulsating blue light	Video	Yes – titanium dioxide	No	Proprietary	Available
IOS FastScan	IOS Technologies, INC. (US)	Active triangulation and Schleimpflug principle	Laser	3 images	Yes	Yes	STL	Available
MIA3d™	Densys3D LTD. (IL)	Active stereoscopic vision	Visible light	2 images	Not disclosed	No	ASCII	Available
DPI-3D	Dimensional Photonics International, INC. (US)	Accordion fringe interferometry (AFI)	Laser, Wavelength 350–500 nm	Multiple images	None	No	Not disclosed	Not Available
3D Progress	MHT S.P.A. (IT) – MHT Optic Research AG (CH)	Confocal microscopy and Moireé effect	Not disclosed	3 images	Occasionally	No	STL	Available
directScan	HINT – ELS GMBH (DE)	Active Stereoscopic Vision	Not disclosed	Multiple images	Not disclosed	No	STL	Not Available
trios	3Shape A/S (DK)	Confocal microscopy	Not disclosed	Multiple images	Not disclosed	No	Not disclosed	Available
Bluescan®-I	A●TRON3D® GMBH (AT)	Active stereoscopic vision	Pulsed UV LED	2 images	None	No	STL	Available

Table 2
Performance and features of intraoral scanning systems.

Intraoral scanner	Company	Accuracy	Advantages	Disadvantages
CEREC®AC-Bluecam	Sirona Dental System GMBH (DE)	–	☑ images are distortion-free (multiple images can be stitched together with great accuracy) ☑automatic shake detection system (ensures acquisition only when the camera is absolutely firm) ☑captures a complete half arch in less than a minute ☑offers image stabilization systems ☑in office milling unit that mills a crown in as little as 4 min	☑needs coatings ☑proprietary format of output files
iTero	Cadent LTD (IL)	–	☑ no need to apply any coatings to the teeth ☑generates a coloured 3D virtual model ☑captures each prepared tooth in 15 or 20 s ☑opportunity to have output files in STL format	☑larger scanner head than the other systems ☑no in office milling units
E4D	D4D Technologies, LLC (US)	–	☑the relative motion effects can be tracked mathematically and removed in subsequent analysis ☑offers in office milling units	☑ must be held a specific distance from the target ☑proprietary format of output files ☑ occasionally needs coatings
Lava™C.O.S.	3M ESPE (US)	–	☑ allows capturing 3D data in a video sequence and models the data in real time ☑if there are holes in the scan, the dentist scans that specific area and the software patches the hole	☑needs coatings ☑no in office milling units ☑proprietary format of output files
IOS FastScan	IOS Technologies, INC. (US)	–	☑includes a scanner to capture colour and translucency information ☑output files in STL format ☑offers in office milling units	☑it needs coatings
MIA3d™	Densys3D LTD. (IL)	30 μm	☑captures the patient's mouth within 90 seconds ☑has the smallest and lightest wand in the market ☑output files in ASCII format (small-sized files)	☑it is not disclosed if it needs coatings ☑no in office milling units
DPI-3D	Dimensional Photonics International, INC. (US)	–	☑ no need to apply any coatings to the teeth ☑the wavelength of the light source enables lower sensitivity to ambient light variations and noise ☑enhanced ability to scan shiny and translucent surfaces	☑not disclosed what the output files format is ☑no in office milling units
3D Progress	MHT S.P.A. (IT) – MHT Optic Research AG (CH)	–	☑ is portable and connects to PC via USB 2.0 cable ☑can be also available for a low monthly rental fee ☑can scan a full arch in less than 3 minutes ☑output files in STL format	☑no in office milling units ☑ occasionally needs coatings
directScan	HINT – ELS GMBH (DE)	12–15 μm	☑ the design software includes a virtual articulator ☑output files in STL format	☑it is not disclosed if it needs coatings ☑no in office milling units
trios	3Shape A/S (DK)	–	☑variation of the focal plane without moving the scanner	☑it is not disclosed if it needs coatings ☑not disclosed what the output files format is ☑no in office milling units
Bluescan®-I	A●TRON3D® GMBH (AT)		☑ very small wand ☑ is portable and connects to PC via USB 2.0 cable ☑can scan a full arch in 4 minutes ☑output files in STL format ☑ no need to apply any coatings to the teeth	☑no in office milling units

from different angular positions of the aperture (1 6 0) are needed in order to assess the distance of target object 8 A from the focus plane (Z_0). The images are captured at different time steps: time t for the aperture position #1, and time $t+\Delta t$ for the aperture position #2. The circle centre on the image plane defines the in-plane object coordinates as follows:

$$X_0 = \frac{-x\,Z_0(L-f)}{fL} \quad Y_0 = \frac{-y\,Z_0(L-f)}{fL}$$

where X_0,Y_0 are the in-plane object coordinates, f is the focal length of the objective lens, L is the depth of in-focus object points (focal plane).

Z_0 can be evaluated from two Snell's lens laws for in-focus and out-of-focus object points and by using similar triangles at the image side [50]:

$$Z_0 = \frac{1}{L} + \frac{d(L-f)}{2RfL}$$

The Lava C.O.S. allows capturing 3D data in a video sequence and their respective real-time modelling (approximately 20 3D datasets per second). After the preparation of the tooth and gingival retraction, the entire arch is dried and lightly dusted with powder to locate reference points for the scanner. During the scan, a pulsating blue light is emitted by the wand head and an on-screen image of the teeth appears instantaneously. The 'stripe scanning' is completed as the dentist returns to scanning the occlusal side of the starting tooth. The dentist is able to rotate and magnify the view on the screen, and he can also switch from the 3D image to a 2D view (the dentist can view these images while wearing 3D glasses). When the dentist confirms the scan, a quick scan of the rest of the arch is obtained. If there are holes in the scan, in areas where data is critical, the dentist simply scans that specific area and the software patches the hole. The patient is then instructed to close into the maximum intercuspal position (MIP), the buccal surfaces on one side of the mouth are powdered, and a scan of the occluding teeth is captured. The maxillary and mandibular scans are then digitally articulated on the screen. Then the dentist sends the data to the laboratory technician via internet; the technician employs customized software to digitally cut the die and mark the margin. 3M ESPE receives the digital file, generates a stereolithography (SLA) model (Fig. 35) and sends it to the laboratory [2].

8. Conclusion

This synthetic overview should allow being a support to the dentist in order to perform a more conscious choice, based on a better knowledge of the underlying principles. Therefore, the main concepts have been summarised in Table 1 which compares the technical data among the introduced devices.

No scanning technique can be considered to definitely overcome the others; as outlined in Table 2, each technology bears some pros and cons; therefore it is up to the dentist to weigh these aspects in relation to his specific activity, his requirements, his clients expectations, and his own convictions.

Acknowledgements

This work has been partially funded by EU (7 months Erasmus Consortia Placement Grant) and by EU, ESF, Italian Ministry of Labor and Umbria Region (12 month fellowship)

References

[1] Logozzo S, Franceschini G, Kilpelä A, Caponi M, Governi L, Blois L. A comparative analysis of intraoral 3D digital scanners for restorative dentistry. Internet J. Med. Technol. 2011;5.
[2] Birnbaum NS, Aaronson HB, Stevens C, Cohen B. 3D digital scanners: a high-tech approach to more accurate dental impressions. Inside Dent. 2009;5:70–4.
[3] F. Duret, C. Termoz, Method of and apparatus for making a prosthesis, especially a dental prosthesis, US Patent US4663720 (2010).
[4] M. Brandestini, W.H. Moermann, Method and apparatus for the three dimensional registration and display of prepared teeth, US Patent US4837732 (1989).
[5] Pawley JB. Handbook of biological confocal microscopy. 3 ed. New York: Springer; 2006.
[6] M. Minsky, Microscopy apparatus, US Patent 3013467 (1961).
[7] T.J. Fellers, M.W. Davidson, Olympus FluoView Resource Center: introduction to confocal microscopy, 〈http://www.olympusconfocal.com/theory/confocalintro.html〉, Last access: April 2013.
[8] N. Babayoff, I. Glaser-Inbari, Imaging a three-dimensional structure by confocal focussing an array of light beams, International Publication WO Patent 00/08415 (2000).
[9] L. Harrison, Digital impressions competition booming, 〈http://www.drbicuspid.com/index.aspx?sec=sup &sub=rst&pag=dis&ItemID=301650〉, Last access: April 2013.
[10] N. Babayoff, I. Glaser-Inbari, Method and apparatus for imaging three-dimensional structure, US Patent 2007/0109559 (2007).
[11] N. Babayoff, Method and apparatus for colour imaging a three-dimensional structure, US Patent 2010/0208275 A1 (2010).
[12] Jacobson B. Taking the headache out of impressions. Dent. Today 2007;26: 74–6.
[13] Cyrtina, Cyrtina Cyrtina – Collaborative computerized dentistry, 〈http://www.cyrtina.nl/index.php?option=com_content&view=section&layout=blog&id=7&Itemid=5&lang=it〉, Last access: April 2013.
[14] M. Berner, Optical system for a confocal microscope, US Patent 2010/0085636 A1 (2010).
[15] 3Shape, 3Shape TRIOS® Digital Impression Solution, 〈http://www.3shapedental.com/〉, Last access: April 2013.
[16] R. Fisker, H. Öjelund, R. Kjær, M. Van Der Poel, A. A. Qazi K. J. Hollenbeck, Focus scanning apparatus, International Publication WO Patent 2010/145669 A1 (2010).
[17] S.F. El-Hakim, J.A. Beraldin, F. Blais, A Comparative evaluation of the performance of passive and active 3-D vision systems. In: Fedosov EA editor. Proceedings SPIE 2646, conference on digital photogrammetry and remote sensing, SPIE, St. Petersburg, 14–25.
[18] S.K. Mada, M.L. Smith, L.N. Smith, An Overview of Passive and Active Vision Techniques for Hand-Held 3D Data Acquisition. In: Shearer A, Murtagh FD, Mahon J, Whelan PF editors. Proceedings SPIE 4877, Opto-Ireland 2002: optical metrology, imaging, and machine vision. Proceedings of SPIE, SPIE, Galway, 2003.
[19] I. Kalova, M. Lisztwan, Industrial Applications of Triangulation Technique. In: Proceedings of IFAC workshop on programmable devices and embedded systems – PdeS, Brno: Brno University of Technology, 2006.
[20] Sirona, Sirona Introduces CEREC® AC Powered by Bluecam, 〈http://www.dentalblogs.com/archives/ administrator-2/sirona-introduces-cerec%C2%AE-ac-powered-by-bluecam/〉, Last access: April 2013.
[21] Sirona, CEREC Chairside Solutions| Sirona Dental 2009, 〈http://www.sirona.com/ecomaXL/index.php?site=SIRONA_COM_cerec_nl_2009-01〉, Last access: April 2013.
[22] Forb, Cad/Cam odontoiatrico – Forb, 〈http://www.forb.it/viewdoc.asp?co_id=29〉, Last access: April 2013.
[23] Cerec, Cerec Restorations, Cerec Fillings, Cerec Crowns, Cerec Veneers, Cerec Onlays, Inlays, 〈http://www.cerecwerx.com/cerec_photos.html〉, Last access: April 2013.
[24] A. Schwotzer, Measuring device and method that operates according to the basic principles of confocal microscopy, US Patent 2007/0296959 (2007).
[25] F. Thiel, J. Pfeiffer and P. Fornoff, Apparatus and method for optical 3D measurement, International Publication WO Patent 2008/092791 A1 (2008).
[26] V. Schmidt, 3D dental camera for recording surface structures of a measuring object by means of triangulation, International Publication WO Patent 2010/012838 A1 (2010).
[27] A. Faulstich, Optical projection grid, scanning camera comprising an optical projection grid and method for generating an optical projection grid, US Patent 2010/0026963 A1 (2010).
[28] IOS Technologies, IOS Technologies and Glidewell Laboratories Announce Beta Testing of IOS FastScan(TM) Intraoral Digital Scanner: IOS Technologies and Glidewell Laboratories, 〈http://www.prweb.com/releases/glidewell-dental-lab/ios-fastscan/prweb4313694.htm〉, Last access: April 2013.
[29] M. C. DiTolla, Dental Magazine – CLINICAL TIPS Dr. DiTolla's Clinical Tips – Glidewell Dental Magazine, 〈http://mobile.glidewelldental.com/mobile/dentist/chairside-magazine/2011-v6-1/featured-articles/dr-d-clinical-tips.aspx〉, Last access: April 2013.
[30] R. G. Trissel, Polarizing multiplexer and methods for intra-oral scanning, US Patent 2007/0047079 A1 (2007).
[31] D. M. Durbin and D. A. Durbin, Systems and methods for 3D previewing, US Patent 2009/033108 A1 (2009).

ARTICLE IN PRESS

[32] D. M. Durbin, D. A. Durbin, M. J. Dymek and L. Warden, 3D dental shade matching and apparatus, US Patent 2009/0133260 A1 (2009).
[33] Densys3d, Densys3D, ⟨http://densys3d.com/⟩, Last access: April 2013.
[34] M. M. Ernst, U. Neta, C. Cohen and M. Geffen, Three-dimensional modeling of the oral cavity, US Patent 2008/0273773 A1 (2008).
[35] Hint-ELs®, DIGITAL_DENTAL.NEWS – Informationen – Intraoralscanner Hint-ELs® directScan:, ⟨http://www.ddn-online.net/info/index.php?cat=5&id=88⟩, Last access: April 2013.
[36] Science Illustrated, New scanner takes 3D photos of your teeth | Science Illustrated, ⟨http://scienceillustrated.com.au/blog/medicine/new-scanner-takes-3d-photos-of-your-teeth/⟩. Last access: April 2013.
[37] a.tron3d, 3D Intraoral Scanner-a.tron3d ® gmbh – preserve your smile, a-tron3d, 2013, ⟨http://www.a-tron3d.com⟩, Last access: April 2013.
[38] C. Nowak, H. Koinig and J. Jesenko, Device for recording images of three-dimensional objects, US Patent US 2012/0237889 A1 (2012).
[39] Schmitt JM. Optical Coherence Tomography (OCT): A Review. IEEE J. Selected Topics Quantum Electron. 1999;5:1205–15.
[40] E4D, E4D Dentist, ⟨http://www.e4d.com/products⟩, Last access: April, 2013.
[41] H. Quadling, M. Quadling and A. Blair, Laser digitizer system for dental applications, US Patent 2010/0060900 A1 (2010).
[42] Faro, FARO – Brochures – Accordion Fringe Interferometry, ⟨http://www.faro.com/site/resources/details/912⟩, Last access: April 2013.
[43] R. F. Dillon, B. Zhao and N. H. Judell, Intra-oral three-dimensional imaging system, International Publication WO Patent 2009/058656 A1 (2009).
[44] DPI-3D, DPI's proprietary 3D technology is remarkable in multiple ways, ⟨http://www.dphotonics.com/technology⟩. Last access: April 2013.
[45] L. G. Shirley and M. S. Mermelstein, Apparatus and methods for surface contour measurement, US Patent 5870191 (1999).
[46] S. Heber, 3D Image Reconstruction Using Active Wavefront Sampling, ⟨http://rvlab.icg.tugraz.at/ project_page/project_wavefront/project_wavefront.htm⟩, Last access: April 2013.
[47] Fasbinder DJ. Digital workflow for the Lava COS system. Inside Dent. 2009;5.
[48] 3M ESPE, Lava™ Scan ST optical scanning system, ⟨http://solutions.3m.co.za/wps/portal/3M/en_ZA/3M_ESPE/DentalManufacturers/Products/DigitalDentistry/DentalTechnician/DentalCAD-CAM/DentalScanners/⟩. Last access: April 2013.
[49] N. Kondon, Making the switch to the Lava C.O.S., ⟨http://www.benco.com/About/News/Making_the_Switch_to_the_Lava_C_O_S_.aspx⟩, Last access: April 2013.
[50] D. P. Hart, J. Lammerding and J. Rohaly, 3-D imaging system, US Patent 2004/0155975 A1 (2004).

Please cite this article as: Logozzo S, et al. Recent advances in dental optics – Part I: 3D intraoral scanners for restorative dentistry. Opt Laser Eng (2013), http://dx.doi.org/10.1016/j.optlaseng.2013.07.017

Exhibit 1011 page 20 of 20
DENTAL IMAGING
View publication stats