IN THE UNITED STATES DISTRICT COURT
FOR THE EASTERN DISTRICT OF TEXAS
MARSHALL DIVISION

ORCKIT CORPORATION, Plaintiff, v. CISCO SYSTEMS, INC., Defendant.	Civil Action No. 2:22-CV-00276-JRG **JURY TRIAL DEMANDED**

CISCO'S PRELIMINARY SUBJECT MATTER ELIGIBILITY CONTENTIONS

Pursuant to the Court's Standing Order Regarding Subject Matter Eligibility Contentions Applicable to All Patent Infringement Cases Assigned to Chief District Judge Rodney Gilstrap and the Court's First Amended Docket Control Order (D.I. 46), Defendant Cisco Systems, Inc. ("Cisco") hereby sets forth its Preliminary Eligibility Contentions concerning U.S. Patent Nos. 7,545,740 ("the '740 Patent"), 8,830,821 ("the '821 Patent"), and 10,652,111 ("the '111 Patent") (collectively, the "Ineligible Patents"). Plaintiff Orckit Corporation ("Orckit") has asserted claims 1–31 of the '740 Patent, claims 1–20 of the '821 Patent, and claims 1–9, 12–24, and 27–31 of the '111 Patent (collectively, the "Asserted Claims"). Cisco contends that each Asserted Claim is invalid under 35 U.S.C. § 101, among other statutes, because the Asserted Claims are directed to abstract ideas, do not include an inventive concept, and do not claim patent eligible subject matter.

Among the Asserted Claims, Cisco contends that the following claims are representative of the Asserted Claims for purposes of these Subject Matter Eligibility Contentions:

Patent	Representative Claims	Represented Asserted Claims	Abstract Idea	Chart
'740 Patent	Claim 17	1–31	Selecting two parts of a communications path based on the same computation	A-1
'821 Patent	Claim 1	1–20	Selecting and reselecting a pair of communications paths based on cost	A-2
'111 Patent	Claim 1	1–9, 12–24, and 27–31	Routing data based on information received from a controller	A-3

I. SCOPE OF THESE PRELIMINARY SUBJECT MATTER ELIGIBILITY CONTENTIONS

These Preliminary Subject Matter Eligibility Contentions: (i) identify each exception to eligibility to which each Representative Claim (and by extension Asserted Claim) is directed, including Cisco's supporting factual and legal bases; (ii) describe the industry in which the Representative Claims (and by extension Asserted Claims) are alleged to be well understood, routine, and conventional, including Cisco's supporting factual and legal bases; (iv) describe why each Representative Claim (and by extension Asserted Claim) was well understood, routine, and conventional in the relevant industry, including Cisco's supporting factual and legal bases; and (v) provide Cisco's other factual and legal bases for its contention that the Representative Claims (and by extension Asserted Claims) are invalid under 35 U.S.C. § 101. These contentions relate only to subject matter eligibility, and do not include any contention or position beyond this issue (*e.g.*, other forms of invalidity, non-infringement, or claim construction).

Cisco's discovery and investigation in this lawsuit is ongoing, and these contentions are based on the information Cisco has obtained to date. Cisco reserves the right to supplement and/or amend its Preliminary Eligibility Contentions consistent with the Federal Rules of Civil Procedure,

Orckit Exhibit 2020
Cisco Systems v. Orckit Corp.
IPR2023-00401, Page 2 of 56

the Local Rules, and any orders from the Court, including after the Court issues any Claim Construction Order.

These Preliminary Eligibility Contentions are based upon Cisco's present understanding of the Asserted Claims, Orckit's November 3, 2022 Disclosure of Asserted Claims and Infringement Contentions Pursuant to P.R. 3-1, and Orckit's January 19, 2023 First Amended Disclosure of Asserted Claims and Infringement Contentions Pursuant to P.R. 3-1 (Orckit's "Infringement Disclosures"). Cisco does not concede that any of Orckit's (apparent) claim constructions are correct. If Orckit amends its Infringement Disclosures, Cisco reserves the right to update its Preliminary Eligibility Contentions.

II. ORCKIT'S ALLEGED PRIORITY DATES

Orckit contends that the '740 Patent has a priority date of April 7, 2006, that the '821 Patent has a priority date of June 22, 2011, and that the '111 Patent has a priority date of April 22, 2014. *See* Orckit's Infringement Disclosures at 3–4. Cisco contends that the Ineligible Patents can only claim priority to the respective filing dates of the earliest filed non-provisional application. In other words, the earliest possible priority date for the '740 Patent is its filing date of April 7, 2006, the earliest possible priority date for the '821 Patent is its filing date of December 5, 2011, and the earliest possible priority date for the '111 Patent is its filing date of April 21, 2015.

With respect to the '821 and '111 Patents, Orckit has not met its burden to demonstrate that these patents should be entitled to an earlier priority date than their filing dates.[1] Pursuant to Local Patent Rule 3-2(b), Orckit is required to disclose "[a]ll documents evidencing the conception, reduction to practice, design, and development of each claimed invention, which were created on or before the date of application for the patent in suit … ." Orckit's Infringement

[1] Orckit's Infringement Disclosures treat the priority dates of the Ineligible Patents as a whole, and Orckit does not forward any claim-by-claim priority analysis.

Orckit Exhibit 2020
Cisco Systems v. Orckit Corp.
IPR2023-00401, Page 3 of 56

Disclosures concede that Orckit has not identified any evidence corroborating a conception date earlier than the filing dates of the ’821 or ’111 Patents:

II. Production Numbers

Orckit identifies its accompanying document production below.

Category of Documents	Production Range
Local Patent R. 3-1(f)	Plaintiff Orckit Corporation has never made any products.
Local Patent R. 3-2(a)	As of the date of this disclosure, Orckit has not located any documents that would fall into this category.
Local Patent R. 3-2(b)	As of the date of this disclosure, Orckit has not located any documents that would fall into this category.

Orckit’s Infringement Disclosures at 4 (annotation added).

Orckit appears to claim priority to the provisional applications of the ’821 and ’111, but neither application supports priority of those patents because the provisional applications of the ’821 and ’111 patents do not disclose each limitation of any claim of the ’821 or ’111 patents.

For example, the provisional application of the ’821 Patent does not set forth an adequate written description or enable the claim scope alleged by Orckit of at least the following claim limitations: “determining an overall cost for each entity pair of said plurality of entities”; “selecting an entity pair from said plurality of transport entities based at least in part upon said overall cost; and”; “if an entity pair reselection event occurs, reselecting said entity pair from the group consisting of said entity pair and a replacement entity pair comprising at least one entity distinct from the entities of said entity pair”; “wherein said entity pair reselection event is selected from a group consisting of adding an entity to said plurality of transport entities, removing an entity from said plurality of transport entities, an operational status change for one of said plurality of transport entities, and a change in overall cost for one of said plurality of transport entities”;

"digital logic configured to select said working entity and said protection entity from said plurality of transport entity descriptors, comprising: logic configured to determine a probability of concurrent failure of said working entity and said protection entity"; "logic configured to determine an entity cost of said plurality of transport entity descriptors"; and "wherein said reselection event is selected from a group consisting of adding an entity to said plurality of transport entities, removing an entity from said plurality of transport entities, an operational status change for one of said plurality of transport entities, and a change in overall cost for one of said plurality of transport entities."

For example, the provisional application of the '111 Patent does not set forth an adequate written description or enable the claim scope alleged by Orckit of at least the following claim limitations: "controller," "instruction," "sending, by the controller to the network node over the packet network, an instruction and a packet-applicable criterion"; "responsive to the packet not satisfying the criterion, sending, by the network node over the packet network, the packet to the second entity"; "responsive to the packet satisfying the criterion, sending the packet, by the network node over the packet network, to an entity that is included in the instruction and is other than the second entity"; "receiving, from the controller, the instruction and the criterion"; "checking if the packet satisfies the criterion; responsive to the packet not satisfying the criterion, sending over the packet network, the packet to the second entity"; and "responsive to the packet satisfying the criterion, sending the packet over the packet network, to an entity that is included in the instruction and is other than the second entity."

III. FACTUAL AND LEGAL BASES FOR SUBJECT MATTER ELIGIBILITY CONTENTIONS

Cisco contends that the Representative Claims (and by extension Asserted Claims) are invalid under 35 U.S.C. § 101 because they are directed to abstract ideas and none of the elements,

or an ordered combination thereof, include an inventive concept. Exhibits A-1 through A-3 identify in chart form: (i) each exception to eligibility to which each Representative Claim (and by extension Asserted Claim) is directed, including Cisco's supporting factual and legal bases; (ii) which Representative Claim (and by extension Asserted Claim) is representative, including which Asserted Claims are represented by which Representative Claims; (iii) the industry in which the Representative Claims (and by extension Asserted Claims) are alleged to be well understood, routine, and conventional, including Cisco's supporting factual and legal bases; (iv) why each Representative Claim (and by extension Asserted Claim) was well understood, routine, and conventional in the relevant industry, including Cisco's supporting factual and legal bases; and (v) Cisco's other factual and legal bases for its contention that the Representative Claims (and by extension Asserted Claims) are invalid under 35 U.S.C. § 101.

IV. ACCOMPANYING DOCUMENT PRODUCTION

Subject to the Court's Standing Order Regarding Subject Matter Eligibility Contentions Applicable to All Patent Infringement Cases Assigned to Chief District Judge Rodney Gilstrap, Cisco has produced and/or made available for inspection—or will be producing and/or making available for inspection—the documents referenced in Exhibits A-1 through A-3.

Orckit Exhibit 2020
Cisco Systems v. Orckit Corp.
IPR2023-00401, Page 6 of 56

Dated: February 2, 2023

By: /s/ *Michael R. Rhodes*

Tamir Packin (*pro hac vice*)
tpackin@desmaraisllp.com
Leslie Spencer (*pro hac vice*)
lspencer@desmaraisllp.com
Jordan Owens (*pro hac vice*)
jowens@desmaraisllp.com
Deborah Mariottini (*pro hac vice*)
dmariottini@desmaraisllp.com
DESMARAIS LLP
230 Park Avenue
New York, NY 10169
Tel: (212) 351-3400
Fax: (212) 351-3401

Michael R. Rhodes (*pro hac vice*)
mrhodes@desmaraisllp.com
DESMARAIS LLP
101 California Street
San Francisco, CA 94111
Tel: (415) 573-1900
Fax: (415) 573-1901

Jonathan Lewis (*pro hac vice*)
jlewis@desmaraisllp.com
DESMARAIS LLP
1899 Pennsylvania Avenue, NW
Washington, DC 20006
Tel: (202) 415-4900
Fax: (202) 415-4901

Lead Counsel for Defendant CISCO SYSTEMS, INC.

Melissa R. Smith
GILLIAM & SMITH LLP
303 South Washington Avenue
Marshall, TX 75670
Telephone: (903) 934-8450
Facsimile: (903) 934-9257
melissa@gillamsmithlaw.com

Local Counsel for Defendant CISCO SYSTEMS, INC

CERTIFICATE OF SERVICE

The undersigned hereby certifies that all counsel of record who are deemed to have consented to electronic service are being served with a copy of this document via email per Local Rule CV-5(a)(3) on February 2, 2023.

Dated: February 2, 2023

/s/ *Michael R. Rhodes*

Michael R. Rhodes
E-mail: mrhodes@desmaraisllp.com
DESMARAIS LLP
101 California Street
San Francisco, CA 94111
Telephone: 415-573-1900
Facsimile: 415-573-1901

Orckit Exhibit 2020
Cisco Systems v. Orckit Corp.
IPR2023-00401, Page 8 of 56

EXHIBIT A-1
Cisco's Preliminary Subject Matter Eligibility Contentions
Orckit Corporation v. Cisco Sys., Inc., 2:22-cv-00276-JRG-RSP

Subject Matter Eligibility Chart for U.S. Patent 7,545,740 ("the '740 Patent")

As shown in the chart below, all Asserted Claims of the '740 Patent are invalid under 35 U.S.C. § 101 because considered as a whole, they are directed to the abstract idea of selecting two parts of a communications path based on the same computation, and none of the elements, or an ordered combination thereof, include an inventive concept. *Alice Corp. v. CLS Bank Int'l*, 573 U.S. 208, 218-24 (2014). More specifically, the asserted claims of the '740 Patent were well understood, routine, and conventional, in the computer networking industry by April 7, 2006, the alleged earliest priority date of the '740 Patent.

These subject matter eligibility contentions are based on Cisco's present understanding of the asserted claims, and Orckit's apparent construction of the claims in its November 3, 2022 Disclosure of Asserted Claims and Infringement Contentions Pursuant to P.R. 3-1, and its January 19, 2023 First Amended Disclosure of Asserted Claims and Infringement Contentions Pursuant to P.R. 3-1 (Orckit's "Infringement Disclosures"), which are deficient at least insofar as they fail to cite any documents or identify accused structures, acts, or materials in the Accused Products with particularity. Cisco does not agree with Orckit's application of the claims, or that the claims satisfy the requirements of 35 U.S.C. § 112. Cisco's contentions herein are not, and should in no way be seen as, admissions or adoptions as to any particular claim scope or construction, or as any admission that any particular element is met by any accused product in any particular way. Cisco objects to any attempt to imply claim construction from this chart. Cisco's contentions are made in a variety of alternatives and do not represent its agreement or view as to the meaning, definiteness, written description support for, or enablement of any claim contained therein.

The following contentions are subject to revision and amendment pursuant to Federal Rule of Civil Procedure 26(e), the Local Rules, and the Orders of record in this matter subject to further investigation and discovery regarding the prior art and the Court's construction of the claims at issue.

These Subject Matter Eligibility Contentions rely on evidence from the following sources:

- U.S. Patent App. No. 2006/0221974 to Hilla (CISCO00002754);
- U.S. Patent App. No. 2003/0147387 to Devi (CISCO00002642);

Orckit Exhibit 2020
Cisco Systems v. Orckit Corp.
IPR2023-00401, Page 9 of 56

- U.S. Patent App. No. 2004/0228278 to Bruckman (CISCO00061641);
- U.S. Patent App. No. 2003/0210688 to Basso (CISCO00061703);
- U.S. Patent App. No. 2006/0039366 to Ghosh (CISCO00002140);
- U.S. Patent App. No. 2004/0042448 to Lebizay (CISCO00061662);
- U.S. Patent No. 6,081,530 to Wiher (CISCO00001673);
- IEEE 802.3 Part 3: Carrier sense multiple access with collision detection (CSMA/CD) access method and physical layer specifications (CISCO00002820);
- Various references describing the Cisco EtherChannel System (*see* Cisco's Preliminary Infringement Contentions at Chart C-3); and
- Various references describing the Cisco EtherSwitch System (*see* Cisco's Preliminary Infringement Contentions at Chart C-5).

’740 Patent Claim 17	Exception	Factual And Legal Bases	Notes
Apparatus for connecting a network node with a communication network, comprising: one or more interface modules, which are arranged to process data frames having frame attributes sent between the network node and the communication network at least one of said interface modules being operative to communicate in both an upstream direction and a downstream direction; a first group of first physical links	Abstract Idea	The Supreme Court has set forth a two-step framework for evaluating whether an invention claims patent eligible subject matter. First, a court must “determine whether the claims at issue are directed to one of those patent-ineligible concepts” such as abstract ideas. *Alice Corp. v. CLS Bank Int’l,* 573 U.S. 208, 217 (2014). Second, if the claims are directed to an abstract idea, then a court must determine whether there is an “inventive concept,” which is an “element or combination of elements that is ‘sufficient to ensure that the patent in practice amounts to significantly more than a patent upon the [ineligible concept] itself.’” *Id*. at 217–18. (quoting *Mayo Collaborative Servs. v. Prometheus Labs.*, Inc., 566 U.S. 66, 72–73 (2012).) Here, all of the Asserted Claims of the ’740 Patent, including representative Claim 17, are invalid. First, Claim 17 of the ’740 Patent is directed to the abstract idea of selecting two parts of a communications path based on the same computation. The elements of Claim 17 were well understood, routine, and conventional within the computer networking industry by April 7, 2006. Claim 17 is representative of the other Asserted Claims, Claims 1–16 and 18–31, because these claims are also all directed to the abstract idea of selecting two parts of a communications path based on the same computation and do not recite any inventive concepts beyond this abstract idea. Second, neither the other elements of Claim 17 (or the other asserted claims), nor the ordered combination of these other elements, include an inventive concept. Thus, representative Claim 17, and other asserted claims of the ’740 Patent, are invalid for claiming patent ineligible subject matter. ***Alice Step 1:*** Considered as a whole, Claim 17 of the ’740 Patent is directed to the abstract idea of selecting two parts of a communications path based on the same computation. Claim 17’s preamble recites an “[a]pparatus for connecting a network node with a communication network” and is directed to a communication path.	Representative Claim For Claims 1–31; Direct To The Computer Networking Industry

’740 Patent Claim 17	Exception	Factual And Legal Bases	Notes
arranged in parallel so as to couple the network node to the one or more interface modules; a second group of second physical links arranged in parallel so as to couple the one or more interface modules to the communication network; and a control module, which is arranged to select for each data frame sent between the communication network and the network node, in a single computation based on at least one of the frame attributes, a first		The next limitation of Claim 17 recites “one or more interface modules, which are arranged to process data frames having frame attributes sent between the network node and the communication network, at least one of said interface modules being operative to communicate in both an upstream direction and a downstream direction” and is directed to a well-known type of network device that can process well-known data frames and forward them in well-known network directions. This limitation does not contain any allegedly inventive concepts. The next limitation of Claim 17 recites “a first group of first physical links arranged in parallel so as to couple the network node to the one or more interface modules” and is directed to a first potential part of a communication path. The next limitation of Claim 17 recites “a second group of second physical links arranged in parallel so as to couple the one or more interface modules to the communication network” and is directed to a second potential part of a communication path. The next limitation of Claim 17 recites “and a control module, which is arranged to select for each data frame sent between the communication network and the network node” and is directed to selecting a communications path . The next limitation of Claim 17 recites “and the network node, in a single computation based on at least one of the frame attributes, a first physical link out of the first group and a second physical link out of the second group over which to send the data frame” and is directed to selecting two parts of a communications path, e.g., a first portion and a second portion, based on the same computation. The final limitation of Claim 17 recites “at least one of said first physical links and at least one of said second links being bi-directional links operative to communicate in both said upstream direction and said downstream direction” and is directed to using well-known links that send traffic in well-known network directions. This	

’740 Patent Claim 17	Exception	Factual And Legal Bases	Notes
physical link out of the first group and a second physical link out of the second group over which to send the data frame; at least one of said first physical links and at least one of said second links being bi-directional links operative to communicate in both said upstream direction and said downstream direction.		limitation does not contain any allegedly inventive concepts. Thus, considered as a whole, representative Claim 17 of the ’740 Patent is directed to selecting two parts of a communications path based on the same computation. The computer networking elements recited in Claim 17 of the ’740 Patent were all well-known before April 7, 2006. The ’740 Patent itself explains that link aggregation, frame transmittal, bi-directional traffic, and organizing frames by frame attributes were all known before the purported invention of the ’740 Patent: “Link aggregation (LAG) is a technique by which a group of parallel physical links between two endpoints in a data network can be joined together into a single logical link (referred to as the “LAG group”). Traffic transmitted between the endpoints is distributed among the physical links in a manner that is transparent to the clients that send and receive the traffic. For Ethernet™ networks, link aggregation is defined by Clause 43 of IEEE Standard 802.3ad, Carrier Sense Multiple Access with Collision Detection (CSMA/CD) Access Method and Physical Layer Specifications (2002 Edition), which is incorporated herein by reference. Clause 43 defines a link aggregation protocol sub-layer, which interfaces between the standard Media Access Control (MAC) layer functions of the physical links in a link aggregation group and the MAC clients that transmit and receive traffic over the aggregated links. The link aggregation sub-layer comprises a distributor function, which distributes data frames submitted by MAC clients among the physical links in the group, and a collector function, which receives frames over the aggregated links and passes them to the appropriate MAC clients.” ’740 Patent at 1:10–30. The ’740 Patent’s purported invention is within the field of computer networking. The references that invalidate the ’740 Patent also relate to the field of computer networking. *See generally* Defendant’s Preliminary Invalidity Contentions at Exs. C-1 through C-10 and E-3. Under *Alice* step one, an idea is abstract if it has “no particular concrete or tangible	

’740 Patent Claim 17	Exception	Factual And Legal Bases	Notes
		form.” *Ultramercial, Inc. v. Hulu, LLC*, 772 F.3d 709, 715 (Fed. Cir. 2014). Claims covering “generalized steps to be performed on a computer using conventional computer activity,” rather than a specific improvement to computer functionality, are directed to an abstract idea. *In re TLI Commc’ns LLC Patent Litig*., 823 F.3d 607, 612 (Fed. Cir. 2016). Claim 17 recites a series of components that were well-known in the computer networking field from before the purported invention of the ’740 Patent: network nodes, communication networks, interface modules, data frames, frame attributes, physical links, control modules, and bi-directional links. The ’740 Patent itself and other prior art references confirm that these network elements were well-known and not part of the purported inventive concept of the ’740 Patent. *See* generally Defendant’s Preliminary Invalidity Contentions Exs. C-1 through C-10 and E-3. Claim 17 is not directed to the improvement of the network nodes, communication networks, interface modules, data frames, frame attributes, physical links, control modules, or bi-directional links. Instead, Claim 17 is directed to the abstract idea of selecting two parts of a communications path based on the same computation. The Federal Circuit has recognized that to test if an idea is abstract, it is instructive to compare the claims at issue to claims already found to be directed to an abstract idea in previous cases. *See, e.g., OIP Techs., Inc. v. Amazon.com, Inc.*, 788 F.3d 1359, 1362 (Fed. Cir. 2015). Other courts have found that similar technologies are directed to patent ineligible abstract ideas. Some examples of cases that found similar abstract ideas include: *Magnacross LLC v. OKI Data Americas, Inc.*, No. 3:20-CV-01959-M, 2022 WL 992595, (N.D. Tex. Mar. 31, 2022); *Two-Way Media Ltd. v. Comcast Cable Communications, LLC*, 874 F.3d 1329 (Fed. Cir. 2017); *Elec. Power Grp., LLC v. Alstom S.A.*, 830 F.3d 1350 (Fed. Cir. 2016); *Intellectual Ventures I LLC v. Symantec Corp.*, 838 F.3d 1307, 1314 (Fed. Cir. 2016); and *Intellectual Ventures II LLC v. Sprint Spectrum, L.P.*, 2019 WL 7580245, at *4 (E.D. Tex. 2019).	

’740 Patent Claim 17	Exception	Factual And Legal Bases	Notes
		Thus, the ’740 Patent’s allegedly inventive concept, selecting two parts of a communications path based on the same computation, is an abstract idea that is not directed to an improvement in any of the well-known networking devices recited in Claim 17, and the ’740 Patent is invalid under *Alice* step 1. ***<u>Alice Step 2:</u>*** Neither the other elements of Claim 17, nor the ordered combination of these other elements, include an inventive concept. As explained above, all of the claimed elements, including the network nodes, communication networks, interface modules, data frames, frame attributes, physical links, control modules, or bi-directional links, were well-known in the field of computer networking at the time of the ’740 Patent. As further explained above, the ’740 Patent admits that these elements were well-known, and the prior art confirms that fact. Additionally, the claimed architecture and order of claim elements was also well-known at this time. As shown below, this ordered combination of elements was well-known in the prior art: For example, Hilla discloses this architecture and combination from before the ’740 Patent.	

’740 Patent Claim 17	Exception	Factual And Legal Bases	Notes
		FIG. 2 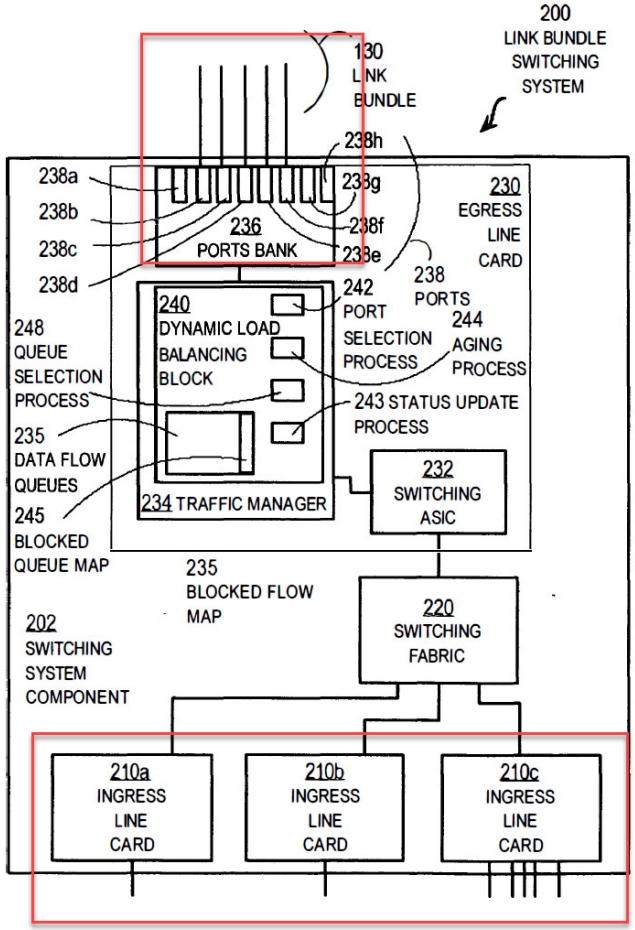 Hilla Fig. 2 (annotation added). As another example, Devi discloses this architecture and combination from before the ’740 Patent.	

’740 Patent Claim 17	Exception	Factual And Legal Bases	Notes
		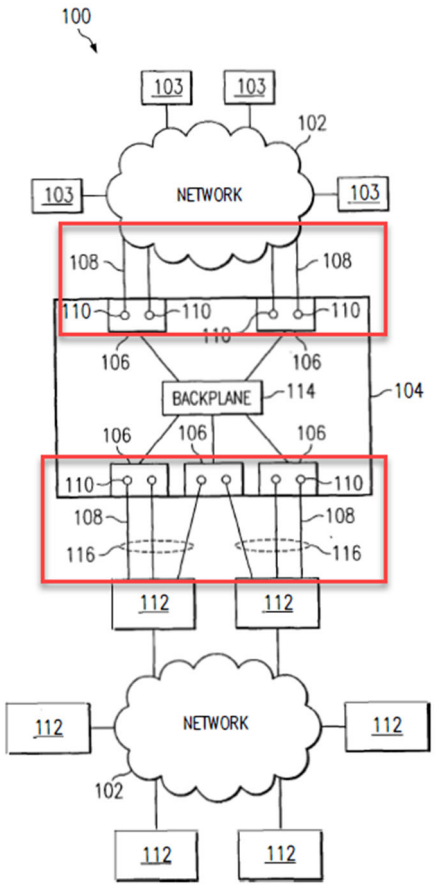 *FIG. 1* Devi Fig. 1 (annotation added). As another example, the Cisco EtherChannel System discloses this architecture and combination from before the ’740 Patent.	

’740 Patent Claim 17	Exception	Factual And Legal Bases	Notes
		Figure 6. Distributed Cisco Express Forwarding Packet Flow 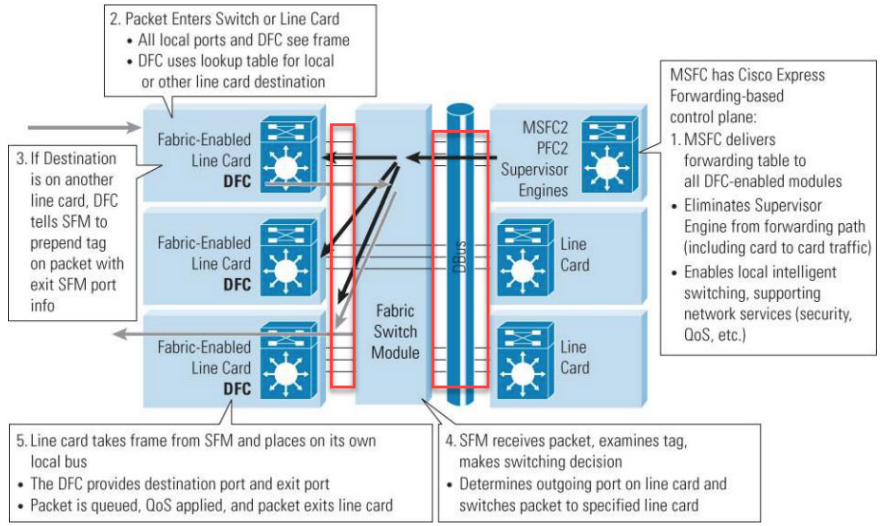 Cisco EtherChannel System (citing Cisco Catalyst 6500 Data Sheet at Figure 6; annotated). As another example, IEEE 802.3 discloses this architecture and combination from before the ’740 Patent.	

’740 Patent Claim 17	Exception	Factual And Legal Bases	Notes
		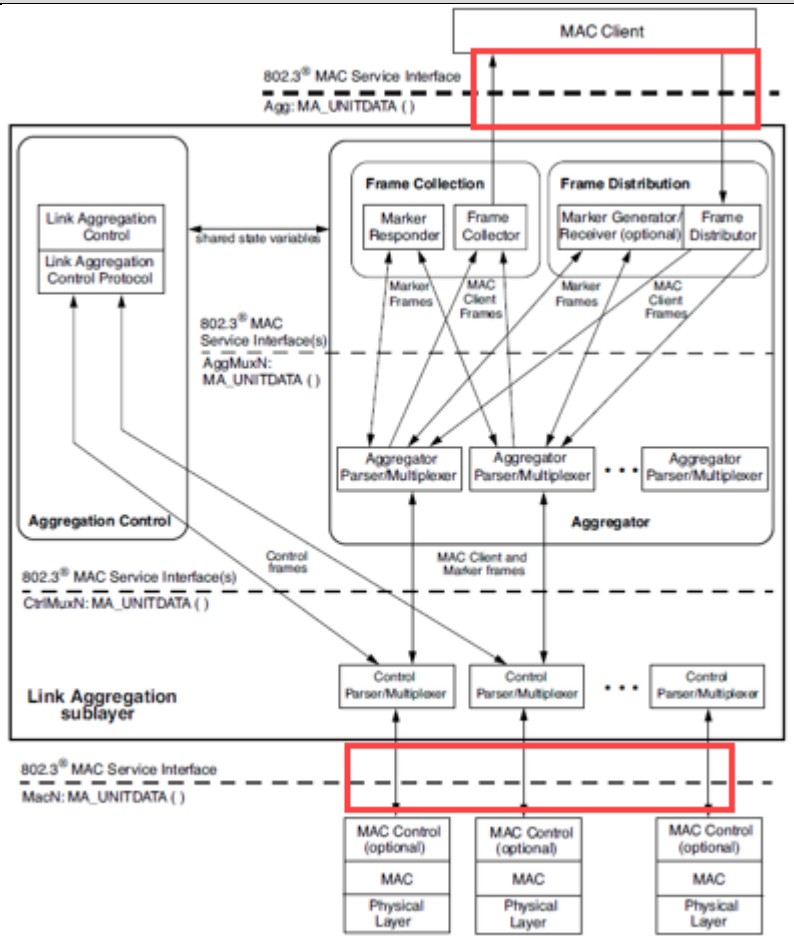 **Figure 43–2—Link Aggregation sublayer block diagram** IEEE 802.3 at Figure 43-2 (annotation added) As another example, Bruckman discloses this architecture and combination from before the ’740 Patent.	

’740 Patent Claim 17	Exception	Factual And Legal Bases	Notes
		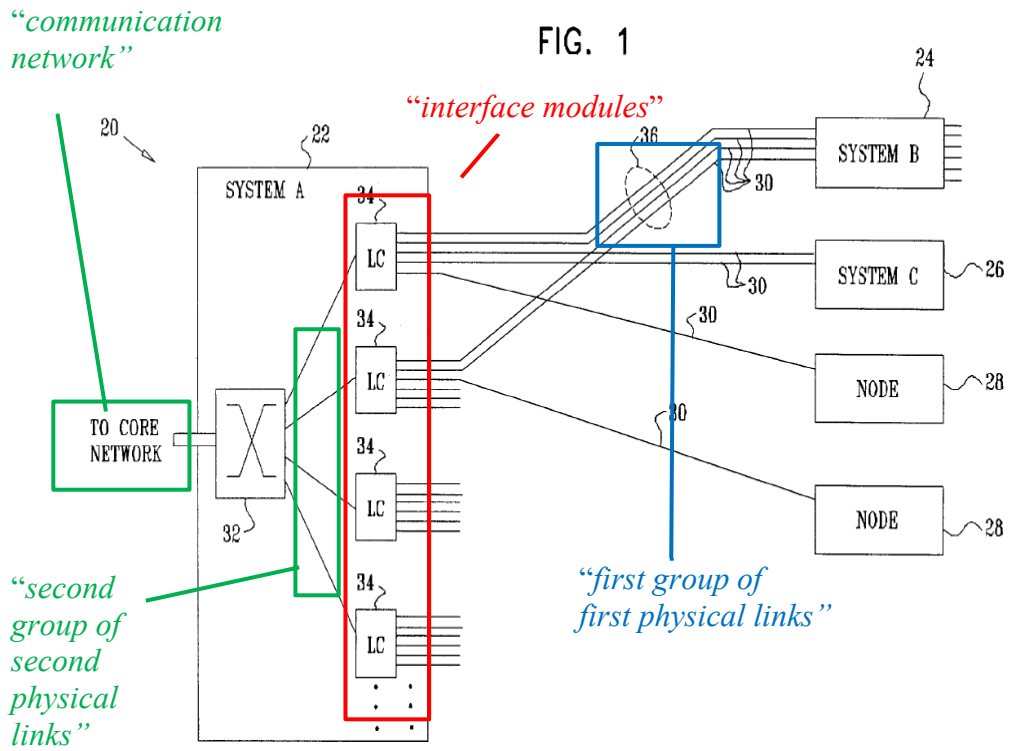 Bruckman Fig. 1 (annotation added). As another example, Basso discloses this architecture and combination from before the ’740 Patent.	

’740 Patent Claim 17	Exception	Factual And Legal Bases	Notes
		FIG. 4 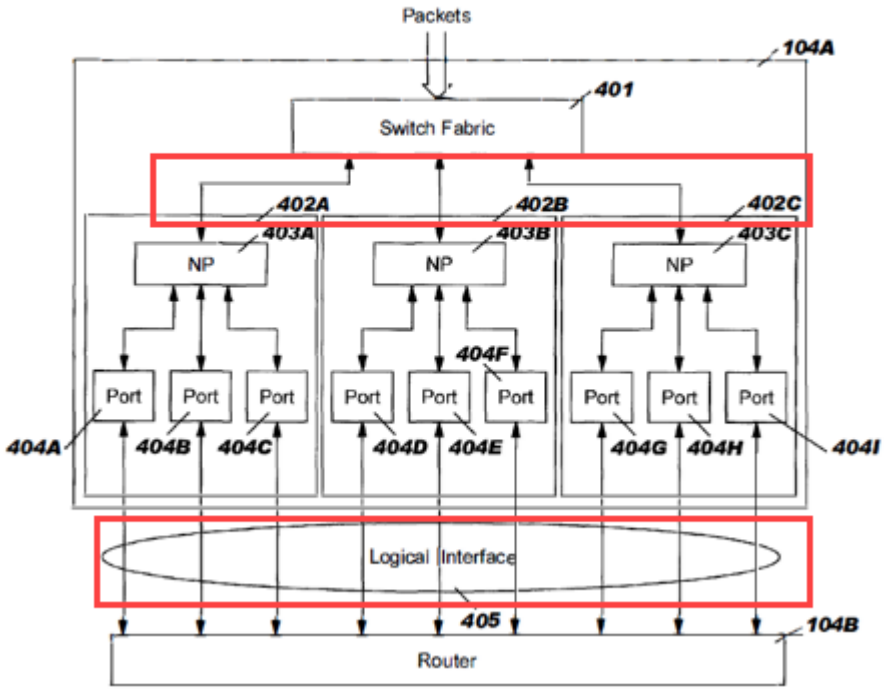 Basso Fig. 4 (annotation added). An another example, Ghosh discloses this architecture and combination from before the ’740 Patent..	

’740 Patent Claim 17	Exception	Factual And Legal Bases	Notes
		Figure 8 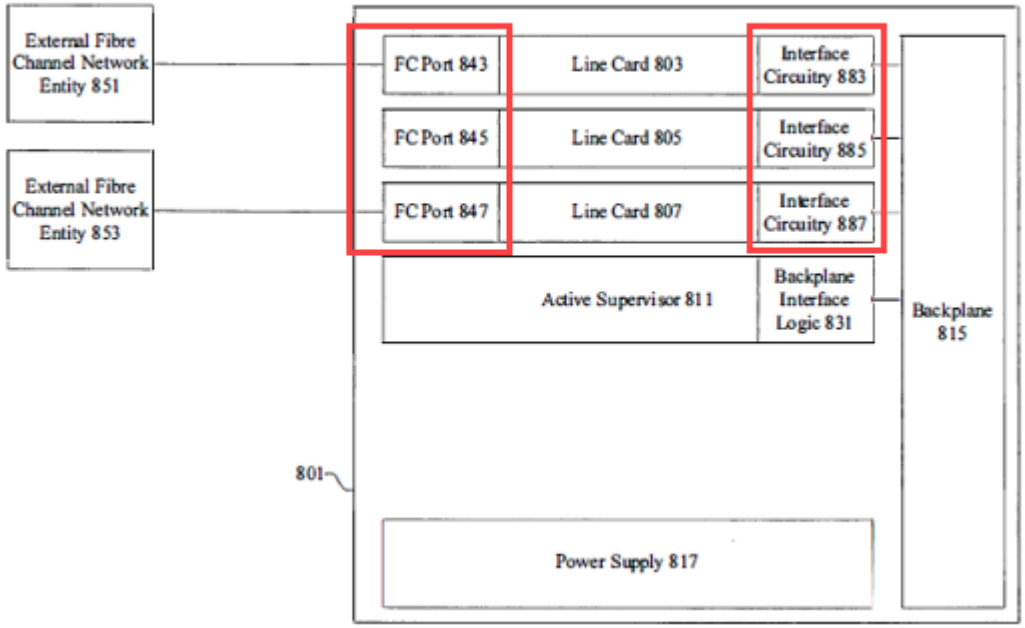 Ghosh Fig. 8 (annotation added). As another example, Lebizay discloses this architecture and combination from before the ’740 Patent.	

’740 Patent Claim 17	Exception	Factual And Legal Bases	Notes
		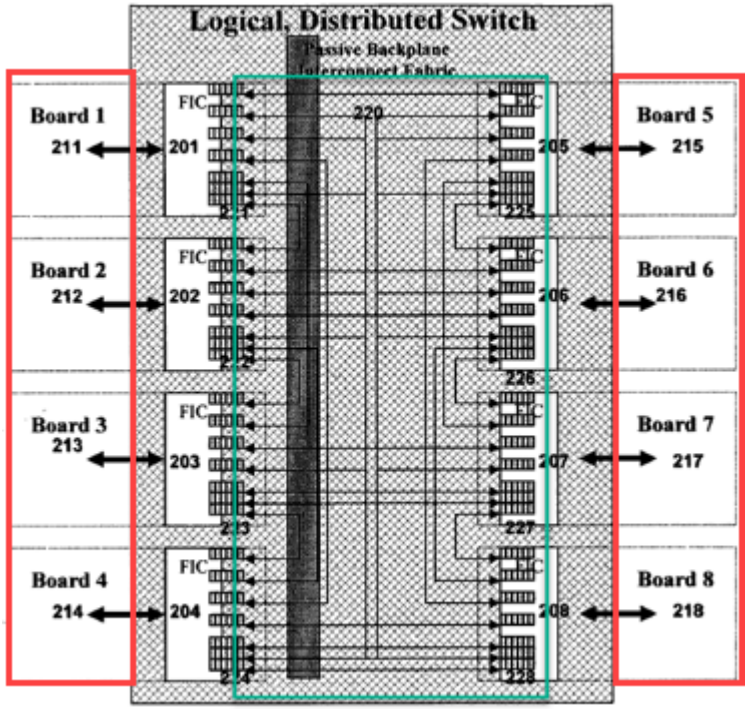 Lebizay Fig. 4 (annotation added). As another example, Wiher ’530 discloses this architecture and combination from before the ’740 Patent.	

’740 Patent Claim 17	Exception	Factual And Legal Bases	Notes
		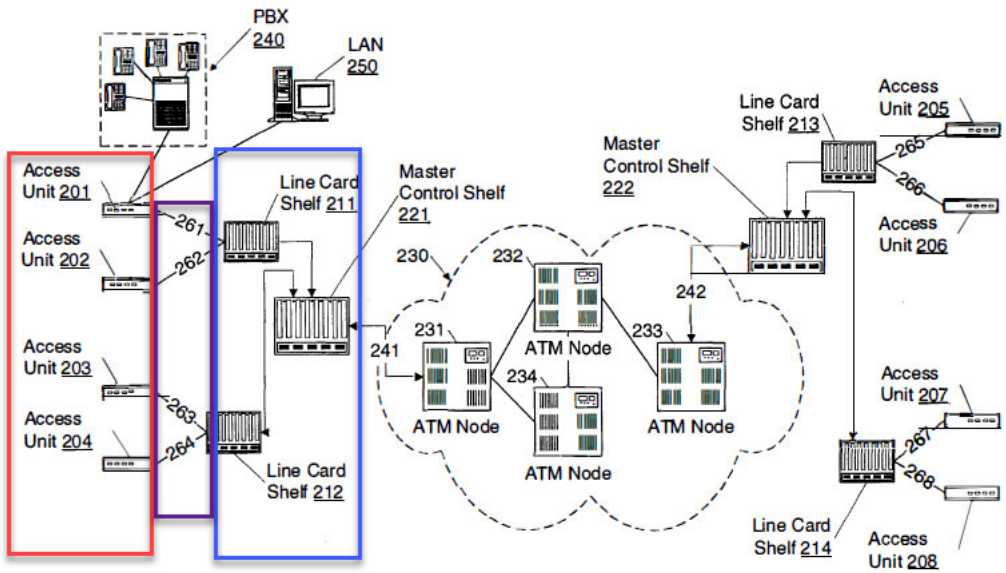 Fig. 2 Wiher ’530 at Fig. 2 (annotation added).	

EXHIBIT A-2
Cisco's Preliminary Subject Matter Eligibility Contentions
Orckit Corporation v. Cisco Sys., Inc., 2:22-cv-00276-JRG-RSP

Subject Matter Eligibility Chart for U.S. Patent 8,830,821 ("the '821 Patent")

As shown in the chart below, all Asserted Claims of the '821 Patent are invalid under 35 U.S.C. § 101 because considered as a whole, they are directed to the abstract idea of selecting and reselecting a pair of communications paths based on cost, and none of the elements, or an ordered combination thereof, include an inventive concept. *Alice Corp. v. CLS Bank Int'l*, 573 U.S. 208, 218-24 (2014). More specifically, the asserted claims of the '821 Patent were well understood, routine, and conventional, in the computer networking industry by June 22, 2011, the alleged earliest priority date of the '821 Patent.

These subject matter eligibility contentions are based on Cisco's present understanding of the asserted claims, and Orckit's apparent construction of the claims in its November 3, 2022 Disclosure of Asserted Claims and Infringement Contentions Pursuant to P.R. 3-1, and its January 19, 2023 First Amended Disclosure of Asserted Claims and Infringement Contentions Pursuant to P.R. 3-1 (Orckit's "Infringement Disclosures"), which are deficient at least insofar as they fail to cite any documents or identify accused structures, acts, or materials in the Accused Products with particularity. Cisco does not agree with Orckit's application of the claims, or that the claims satisfy the requirements of 35 U.S.C. § 112. Cisco's contentions herein are not, and should in no way be seen as, admissions or adoptions as to any particular claim scope or construction, or as any admission that any particular element is met by any accused product in any particular way. Cisco objects to any attempt to imply claim construction from this chart. Cisco's contentions are made in a variety of alternatives and do not represent its agreement or view as to the meaning, definiteness, written description support for, or enablement of any claim contained therein.

The following contentions are subject to revision and amendment pursuant to Federal Rule of Civil Procedure 26(e), the Local Rules, and the Orders of record in this matter subject to further investigation and discovery regarding the prior art and the Court's construction of the claims at issue.

These Subject Matter Eligibility Contentions rely on evidence from the following sources:

- U.S. Patent App. No. 2004/0205239 to Doshi (CISCO00002792);
- U.S. Patent App. No. 2005/0083928 to Sivabalan (CISCO00061650);

Orckit Exhibit 2020
Cisco Systems v. Orckit Corp.
IPR2023-00401, Page 25 of 56

- U.S. Patent App. No. 2006/0250948 to Zamfir (CISCO00002732);
- Kurose, James. F, *et al*. Computer Networking, A Top-Down Approach Featuring the Internet. Addison Wesley, 2001 ("Kurose 2001") (CISCO00061658);
- Various references describing the Cisco IOS System (*see* Cisco's Preliminary Infringement Contentions at Chart B-1);
- Various references describing the Juniper IOS System (*see* Cisco's Preliminary Infringement Contentions at Chart B-2); and
- Various references describing the IETF MPLS System (*see* Cisco's Preliminary Infringement Contentions at Chart B-3).

’821 Patent Claim 1	Exception	Factual And Legal Bases	Notes
An entity selection method performed by a network device, comprising the steps of: providing a plurality of multi protocol label switching (MPLS) transport entities between a first endpoint and a second endpoint; determining an overall cost for each entity pair of said plurality of entities; selecting an entity pair from said plurality of transport entities based at least in part upon said overall cost; and if an entity pair	Abstract Idea	The Supreme Court has set forth a two-step framework for evaluating whether an invention claims patent eligible subject matter. First, a court must “determine whether the claims at issue are directed to one of those patent-ineligible concepts” such as abstract ideas. *Alice Corp. v. CLS Bank Int’l,* 573 U.S. 208, 217 (2014). Second, if the claims are directed to an abstract idea, then a court must determine whether there is an “inventive concept,” which is an “element or combination of elements that is ‘sufficient to ensure that the patent in practice amounts to significantly more than a patent upon the [ineligible concept] itself.’” *Id*. at 217–18. (quoting *Mayo Collaborative Servs. v. Prometheus Labs.*, Inc., 566 U.S. 66, 72–73 (2012).) Here, all of the Asserted Claims of the ’821 Patent, including representative Claim 1, are invalid. First, Claim 1 of the ’821 Patent is directed to the abstract idea of selecting and reselecting a pair of communications paths based on cost. The elements of Claim 1 were well understood, routine, and conventional within the computer networking industry by June 22, 2011. Claim 1 is representative of the other Asserted Claims, Claims 2–20, because these claims are also all directed to the abstract idea of selecting and reselecting a pair of communications paths based on cost and do not recite any inventive concepts beyond this abstract idea. Second, neither the other elements of Claim 1 (or the other asserted claims), nor the ordered combination of these other elements, include an inventive concept. Thus, representative Claim 1, and other asserted claims of the ’821 Patent, are invalid for claiming patent ineligible subject matter. ***<u>Alice Step 1:</u>*** Considered as a whole, Claim 1 of the ’821 Patent is directed to the abstract idea of selecting and reselecting a pair of communications paths based on cost. Claim 1’s preamble recites an “an entity selection method performed by a network device, comprising the steps of” and is directed to selecting network “entities” via a generic “network device.” The ’821 Patent further discloses that an “entity” can	Representative Claim For Claims 1–20; Directed To The Computer Networking Industry

’821 Patent Claim 1	Exception	Factual And Legal Bases	Notes
reselection event occurs, reselecting said entity pair from the group consisting of said entity pair and a replacement entity pair comprising at least one entity distinct from the entities of said entity pair, wherein said entity pair reselection event is selected from a group consisting of adding an entity to said plurality of transport entities, removing an entity from said plurality of transport entities, an operational		include label switch paths (LSPs) or pseudo wires (PWs). *See* ’821 Patent 3:22–29. The ’821 Patent further discloses that both LSPs and PWs were known before the invention and thus do not supply an inventive concept. *See* ’821 Patent 1:38-2:3. The next limitation of Claim 1 recites “ providing a plurality of multi protocol label switching (MPLS) transport entities between a first endpoint and a second endpoint” and is directed to providing well-known network entities, e.g. LSPs or PWs, between well-known types of network endpoints, e.g., routers. This limitation does not contain any allegedly inventive concepts. The next limitation of Claim 1 recites “determining an overall cost for each entity pair of said plurality of entities” and is directed to selecting a pair of communications paths based on cost. The next limitation of Claim 1 recites “selecting an entity pair from said plurality of transport entities based at least in part upon said overall cost” and is directed to selecting a pair of communications paths based on cost. The next limitation of Claim 1 recites “if an entity pair reselection event occurs, reselecting said entity pair from the group consisting of said entity pair and a replacement entity pair comprising at least one entity distinct from the entities of said entity pair” and is directed to “ reselecting a pair of communications paths based on cost. The last limitation of Claim 1 recites “wherein said entity pair reselection event is selected from a group consisting of adding an entity to said plurality of transport entities, removing an entity from said plurality of transport entities, an operational status change for one of said plurality of transport entities, and a change in overall cost for one of said plurality of transport entities” and is directed to detecting well-known events, such as changing a network topology by adding and/or removing an entity, a status change in a network entity, or a change in cost for one of said entities.	

’821 Patent Claim 1	Exception	Factual And Legal Bases	Notes
status change for one of said plurality of transport entities, and a change in overall cost for one of said plurality of transport entities.		This limitation does not contain any allegedly inventive concepts. The ’821 Patent recognizes that failover and switching to protection paths in a network was well-known before the alleged invention. *See* ’821 Patent at 1:23–2:3. Thus, considered as a whole, representative Claim 1 of the ’821 Patent is directed to selecting and reselecting a pair of communications paths based on cost. The computer networking elements recited in Claim 1 of the ’821 Patent were all well-known before June 22, 2011. The ’821 Patent itself explains that network devices, network entities, including LSPs and PWs, failure detection, and protection entities were all known before the ’821 Patent. *See* ’821 Patent 1:38-2:3. The ’821 Patent’s purported invention is within the field of computer networking. The references that invalidate the ’821 Patent also relate to the field of computer networking. *See generally* Defendant’s Preliminary Invalidity Contentions at Exs. B-1 through B-6 and E-2. Additionally, the notion of selecting network paths based on the lowest cost was well-known before the ’821 Patent. *See, e.g.*, Kurose 2001 at 280–82 (“The purpose of a routing algorithm is simple: given a set of routers, with links connecting the routers, a routing algorithm finds a ‘good’ path from source to destination. Typically, a ‘good’ path is one that has ‘least cost.’” … “A link also has a value representing the ‘cost’ of sending a packet across the link. The cost may reflect the level of congestion on that link (for example, the current average delay for a packet across that link) or the physical distance traversed by that link (for example, a transoceanic link might have a higher cost than a short-haul terrestrial link). For our current purposes, we’ll simply take the link costs as a given and won’t worry about how they are determined.” … “In a decentralized routing algorithm, the calculation of the least-cost path is carried out in an iterative, distributed manner.”). Under *Alice* step one, an idea is abstract if it has “no particular concrete or tangible	

’821 Patent Claim 1	Exception	Factual And Legal Bases	Notes
		form.” *Ultramercial, Inc. v. Hulu, LLC*, 772 F.3d 709, 715 (Fed. Cir. 2014). Claims covering “generalized steps to be performed on a computer using conventional computer activity,” rather than a specific improvement to computer functionality, are directed to an abstract idea. *In re TLI Commc’ns LLC Patent Litig.*, 823 F.3d 607, 612 (Fed. Cir. 2016). Claim 1 recites a series of components that were well-known in the computer networking field from before the purported invention of the ’821 Patent: network devices, network entities, including LSPs and PWs, failure detection, and protection entities. The ’821 Patent itself and other prior art references confirm that these network elements were well-known and not part of the purported inventive concept of the ’821 Patent. *See* generally Defendant’s Preliminary Invalidity Contentions Exs. B-1 through B-6 and E-2 at Claim 1. Claim 1 is not directed to the improvement of the network devices, network entities, including LSPs and PWs, failure detection, and protection entities. Instead, Claim 1 is directed to the abstract idea of selecting and reselecting a pair of communications paths based on cost. The Federal Circuit has recognized that to test if an idea is abstract, it is instructive to compare the claims at issue to claims already found to be directed to an abstract idea in previous cases. *See, e.g., OIP Techs., Inc. v. Amazon.com, Inc.*, 788 F.3d 1359, 1362 (Fed. Cir. 2015). Other courts have found that similar technologies are directed to patent ineligible abstract ideas. Some examples of cases that found similar abstract ideas include: *Magnacross LLC v. OKI Data Americas, Inc.*, No. 3:20-CV-01959-M, 2022 WL 992595, (N.D. Tex. Mar. 31, 2022); *Two-Way Media Ltd. v. Comcast Cable Communications, LLC*, 874 F.3d 1329 (Fed. Cir. 2017); *Elec. Power Grp., LLC v. Alstom S.A.*, 830 F.3d 1350 (Fed. Cir. 2016); *Intellectual Ventures I LLC v. Symantec Corp.*, 838 F.3d 1307, 1314 (Fed. Cir. 2016); and *Intellectual Ventures II LLC v. Sprint Spectrum, L.P.*, 2019 WL 7580245, at *4 (E.D. Tex. 2019). Thus, the ’821 Patent’s allegedly inventive concept, selecting and reselecting a pair of communications paths based on cost, is an abstract idea that is not directed to an	

’821 Patent Claim 1	Exception	Factual And Legal Bases	Notes
		improvement in any of the well-known networking devices recited in Claim 1, and the ’821 Patent is invalid under *Alice* step 1. ***<u>Alice Step 2:</u>*** Neither the other elements of Claim 1, nor the ordered combination of these other elements, include an inventive concept. As explained above, all of the claimed elements, including the network devices, network entities, including LSPs and PWs, failure detection, and protection entities, were well-known in the field of computer networking at the time of the ’821 Patent. As further explained above, the ’821 Patent admits that these elements were well-known, and the prior art confirms that fact. Additionally, the claimed architecture and order of claim elements was also well-known at this time. As shown below, this ordered combination of elements was well-known in the prior art: For example, Cisco IOS System discloses this architecture and combination from before the ’821 Patent.	

’821 Patent Claim 1	Exception	Factual And Legal Bases	Notes
		Figure 4 *Backup Tunnels That Terminate at the Same Destination* 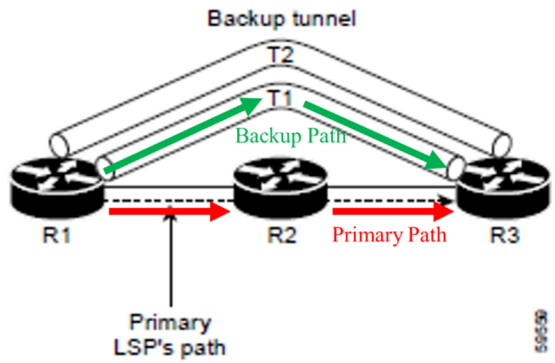 Cisco IOS System (citing Cisco IOS Guide at Fig. 4 (annotation added)). As another example, Juniper IOS System discloses this architecture and combination from before the ’821 Patent. Figure 23: Node Protection Creating a Next-Next-Hop Bypass LSP 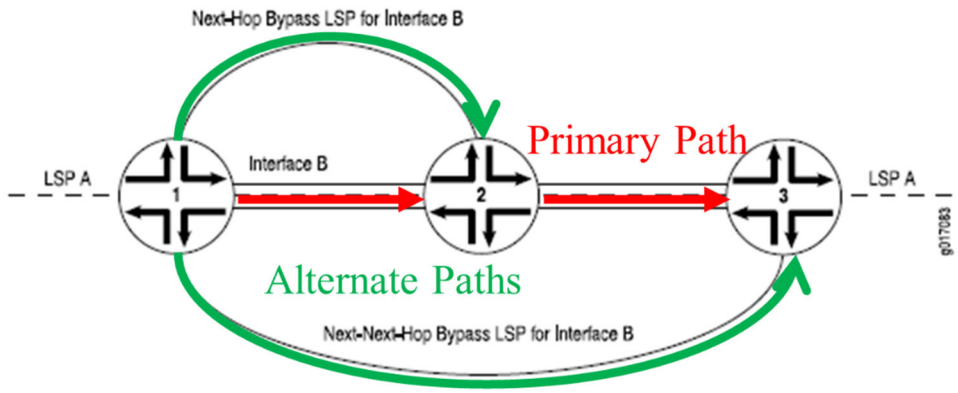 Juniper IOS System (citing Juniper IOS Guide at Fig. 23 (annotation added)).	

’821 Patent Claim 1	Exception	Factual And Legal Bases	Notes
		As another example, IETF MPLS-TP System discloses this architecture and combination from before the ’821 Patent. “Consider the following network topology: A---B---C---D \ / E---F---G The paths [A,B,C,D] and [A,E,F,G,D] are node and link disjoint, ignoring the ingress/egress nodes A and D. A 1+1 protected path is established from A to D over [A,B,C,D] and [A,E,F,G,D], and traffic is transmitted simultaneously over both component paths (i.e., LSPs). During the provisioning phase, both LSPs are fully instantiated (and thus activated) so that no resource sharing can be done along the protecting LSP (nor can any extra-traffic be transported). It is also RECOMMENDED to set the N bit since no protection-switching signaling is assumed in this case. When a failure occurs (say, at node B) and is detected at end-node D, the receiver at D selects the normal traffic from the other LSP. From this perspective, 1+1 unidirectional protection can be seen as an uncoordinated protection-switching mechanism acting independently at both endpoints. Also, for the LSP under failure condition, it is RECOMMENDED to not set the Path_State_Removed Flag of the ERROR_SPEC object (see [RFC3473]) upon PathErr message generation. Note: it is necessary that both paths are SRLG disjoint to ensure recoverability; otherwise, a single failure may impact both working and protecting LSPs.” RFC 4872 at 9. As another example, Doshi ’239 discloses this architecture and combination from before the ’821 Patent.	

’821 Patent Claim 1	Exception	Factual And Legal Bases	Notes
		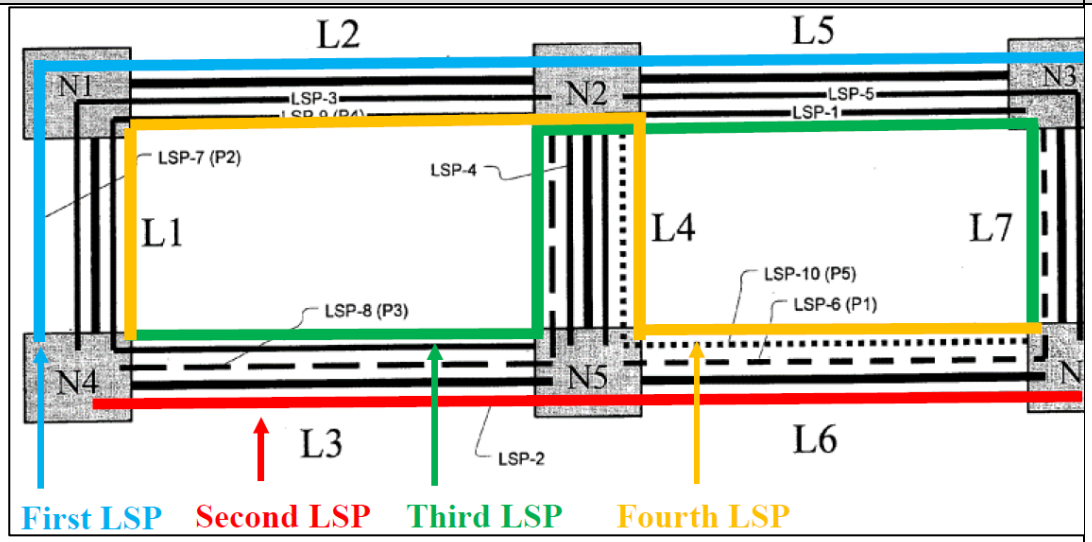 Doshi ’239, Fig. 1 (annotated).	

’821 Patent Claim 1	Exception	Factual And Legal Bases	Notes
		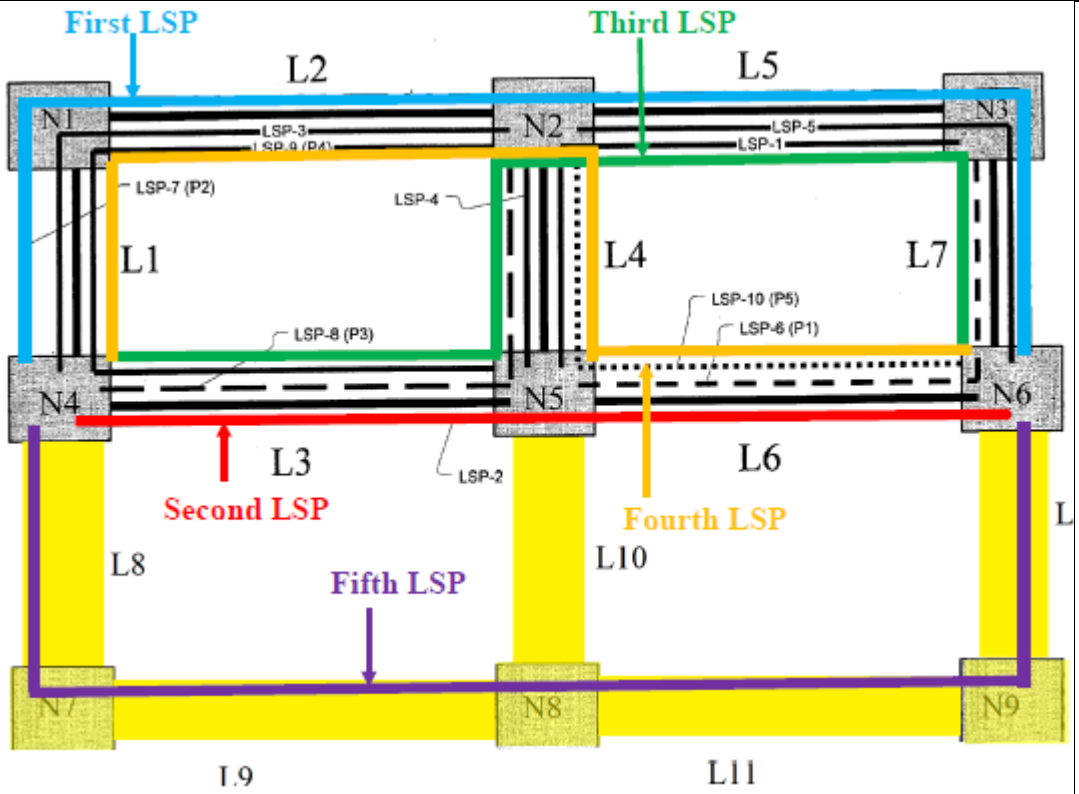 Doshi ’239 Fig. 1 (annotated to show Guichard combination). As another example, Sivabalan ’928 discloses this architecture and combination from before the ’821 Patent.	

’821 Patent Claim 1	Exception	Factual And Legal Bases	Notes
		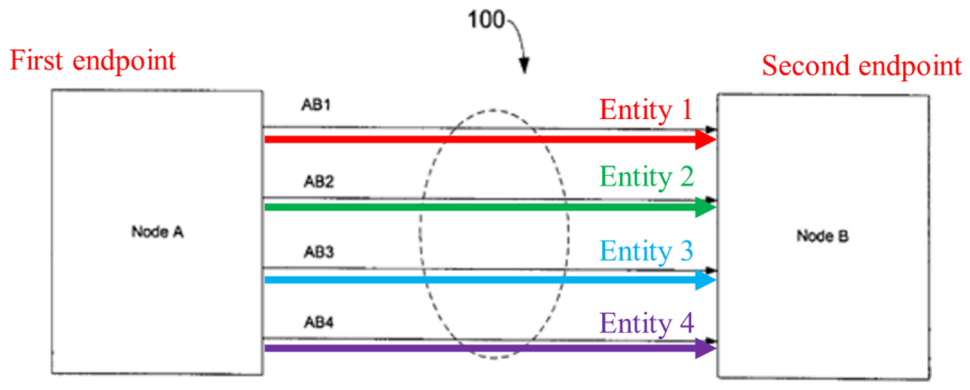 FIG. 1 Sivabalan ’928 Fig. 1 (annotation added). As another example, Zamfir ’948 discloses this architecture and combination from before the ’821 Patent.	

’821 Patent Claim 1	Exception	Factual And Legal Bases	Notes
		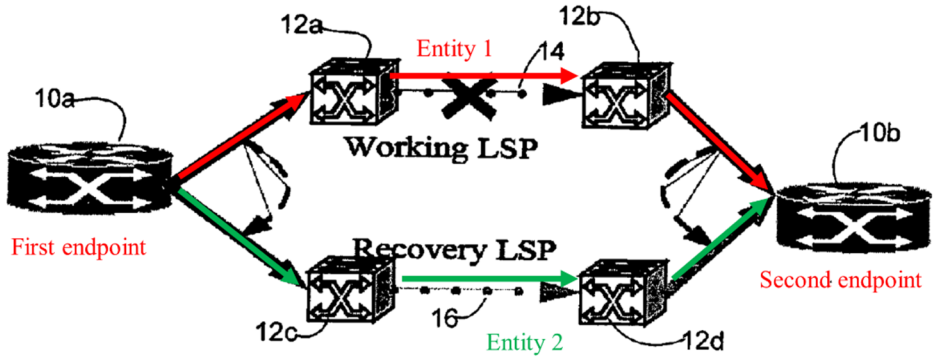 FIG. 1A Zamfir ’948 Fig. 1A (annotation added).	

EXHIBIT A-3
Cisco's Preliminary Subject Matter Eligibility Contentions
Orckit Corporation v. Cisco Sys., Inc., 2:22-cv-00276-JRG-RSP

Subject Matter Eligibility Chart for U.S. Patent 10,652,111 ("the '111 Patent")

As shown in the chart below, all Asserted Claims of the '111 Patent are invalid under 35 U.S.C. § 101 because considered as a whole, they are directed to the abstract idea of routing data based on information received from a controller, and none of the elements, or an ordered combination thereof, include an inventive concept. *Alice Corp. v. CLS Bank Int'l*, 573 U.S. 208, 218-24 (2014). More specifically, the Asserted Claims of the '111 Patent were well understood, routine, and conventional, in the computer networking industry by April 22, 2014, the alleged earliest priority date of the '111 Patent.

These subject matter eligibility contentions are based on Cisco's present understanding of the asserted claims, and Orckit's apparent construction of the claims in its November 3, 2022 Disclosure of Asserted Claims and Infringement Contentions Pursuant to P.R. 3-1, and its January 19, 2023 First Amended Disclosure of Asserted Claims and Infringement Contentions Pursuant to P.R. 3-1 (Orckit's "Infringement Disclosures"), which are deficient at least insofar as they fail to cite any documents or identify accused structures, acts, or materials in the Accused Products with particularity. Cisco does not agree with Orckit's application of the claims, or that the claims satisfy the requirements of 35 U.S.C. § 112. Cisco's contentions herein are not, and should in no way be seen as, admissions or adoptions as to any particular claim scope or construction, or as any admission that any particular element is met by any accused product in any particular way. Cisco objects to any attempt to imply claim construction from this chart. Cisco's contentions are made in a variety of alternatives and do not represent its agreement or view as to the meaning, definiteness, written description support for, or enablement of any claim contained therein.

The following contentions are subject to revision and amendment pursuant to Federal Rule of Civil Procedure 26(e), the Local Rules, and the Orders of record in this matter subject to further investigation and discovery regarding the prior art and the Court's construction of the claims at issue.

These Subject Matter Eligibility Contentions rely on evidence from the following sources:

- U.S. Patent App. No. 2012/0300615 to Kempf (CISCO00002141);
- U.S. Patent App. No. 2013/0322242 to Swenson (CISCO00061649);

Orckit Exhibit 2020
Cisco Systems v. Orckit Corp.
IPR2023-00401, Page 38 of 56

- U.S. Patent App. No. 2014/0140211 to Chandrasekaran (CISCO00002142);
- U.S. Patent No. 9,264,400 to Lin (CISCO00002629);
- U.S. Patent App. No. 2013/0291088 to Shieh (CISCO00002636);
- U.S. Patent No. 9,276,877 to Chua (CISCO00061713);
- U.S. Patent No. 9,038,151 to Chua (CISCO00002762);
- U.S. Patent App. No. 2005/0210533 to Copeland (CISCO00061642);
- U.S. Patent App. No. 2011/0310901 to Uchida (CISCO00002123); and
- Various references describing the Cisco IWAN System (*see* Cisco's Preliminary Infringement Contentions at Chart D-7).

’111 Patent Claim 1	Exception	Factual And Legal Bases	Notes
A method for use with a packet network including a network node for transporting packets between first and second entities under control of a controller that is external to the network node, the method comprising: sending, by the controller to the network node over the packet network, an instruction and a packet-applicable criterion; receiving, by the network node from the controller, the instruction and the criterion; receiving, by the	Abstract Idea	The Supreme Court has set forth a two-step framework for evaluating whether an invention claims patent eligible subject matter. First, a court must “determine whether the claims at issue are directed to one of those patent-ineligible concepts” such as abstract ideas. *Alice Corp. v. CLS Bank Int’l,* 573 U.S. 208, 217 (2014). Second, if the claims are directed to an abstract idea, then a court must determine whether there is an “inventive concept,” which is an “element or combination of elements that is ‘sufficient to ensure that the patent in practice amounts to significantly more than a patent upon the [ineligible concept] itself.’” *Id.* at 217–18. (quoting *Mayo Collaborative Servs. v. Prometheus Labs.*, Inc., 566 U.S. 66, 72–73 (2012).) Here, all of the Asserted Claims of the ’111 Patent, including representative Claim 1, are invalid. First, Claim 1 of the ’111 Patent is directed to the abstract idea of routing data based on information received from a controller. The elements of Claim 1 were well understood, routine, and conventional within the computer networking industry by April 22, 2014. Claim 1 is representative of the other Asserted Claims, Claims 2–9, 12–24, and 27–31, because these claims are also all directed to the abstract idea of routing data based on information received from a controller and do not recite any inventive concepts beyond this abstract idea. Second, neither the other elements of Claim 1 (or the other asserted claims), nor the ordered combination of these other elements, include an inventive concept. Thus, representative Claim 1, and other asserted claims of the ’111 Patent, are invalid for claiming patent ineligible subject matter. ***<u>Alice Step 1:</u>*** Considered as a whole, Claim 1 of the ’111 Patent is directed to the abstract idea of routing data based on information received from a controller. Claim 1’s preamble recites an “A method for use with a packet network including a network node for transporting packets between first and second entities under control of a controller that is external to the network node, the method comprising”	Representative Claim For Claims 1–9, 12–24, and 27–31; Directed To The Computer Networking Industry

’111 Patent Claim 1	Exception	Factual And Legal Bases	Notes
network node from the first entity over the packet network, a packet addressed to the second entity; checking, by the network node, if the packet satisfies the criterion; responsive to the packet not satisfying the criterion, sending, by the network node over the packet network, the packet to the second entity; and responsive to the packet satisfying the criterion, sending the packet, by the network node over the packet		and is directed to routing data under the control of a controller. The next limitation of Claim 1 recites “ sending, by the controller to the network node over the packet network, an instruction and a packet-applicable criterion” and is directed to routing data based on information received from a controller. Specifically, this limitation refers to using a controller to perform the well-known function of instructing a network device on how to route packets. Indeed, the ’111 Patent explains that having a controller send instructions to a router was known before the ’111 Patent and was generally referred to as “software defined networking.” *See* ’111 Patent 1:30–49. The next limitation of Claim 1 recites “receiving, by the network node from the controller, the instruction and the criterion” and is directed to routing data based on information received from a controller. Specifically, this limitation refers to the well-known function of having a router receive instructions from a controller. Indeed, the ’111 Patent explains that having a router receive instructions from a controller was known before the ’111 Patent and was generally referred to as “software defined networking.” *See* ’111 Patent 1:30–49. The next limitation of Claim 1 recites “receiving, by the network node from the first entity over the packet network, a packet addressed to the second entity” and is directed to having a network device, such as a router, perform its well-known function of routing packets. Indeed, the ’111 Patent explains that it was well-known to have routers perform “data forwarding (e.g. data plane)” functions, such as routing packets. *See* ’111 Patent 1:39–49. The next limitation of Claim 1 recites “checking, by the network node, if the packet satisfies the criterion” and is directed to using the information received from a controller. The next limitation of Claim 1 recites “responsive to the packet not satisfying the	

’111 Patent Claim 1	Exception	Factual And Legal Bases	Notes
network, to an entity that is included in the instruction and is other than the second entity.		criterion, sending, by the network node over the packet network, the packet to the second entity” and is directed to using the information received from a controller . The final limitation of Claim 1 recites “responsive to the packet satisfying the criterion, sending the packet, by the network node over the packet network, to an entity that is included in the instruction and is other than the second entity” and is directed to using the information received from a controller. Thus, considered as a whole, representative Claim 1 of the ’821 Patent is directed to routing data based on information received from a controller. The computer networking elements recited in Claim 1 of the ’111 Patent were all well-known before April 22, 2014. The ’111 Patent itself explains that routers, controllers, and data packets were all known before the ’111 Patent. *See* ’111 Patent 1:20-2:10. The ’111 Patent’s purported invention is within the field of computer networking. The references that invalidate the ’111 Patent also relate to the field of computer networking. *See generally* Defendant’s Preliminary Invalidity Contentions at Exs. D-1 through D-11 and E-4. Under *Alice* step one, an idea is abstract if it has “no particular concrete or tangible form.” *Ultramercial, Inc. v. Hulu, LLC*, 772 F.3d 709, 715 (Fed. Cir. 2014). Claims covering “generalized steps to be performed on a computer using conventional computer activity,” rather than a specific improvement to computer functionality, are directed to an abstract idea. *In re TLI Commc’ns LLC Patent Litig*., 823 F.3d 607, 612 (Fed. Cir. 2016). Claim 1 recites a series of components that were well-known in the computer networking field from before the purported invention of the ’111 Patent: network devices, network entities, including routers, controllers, and data packets. The ’111 Patent itself and other prior art references confirm that these network elements were well-known and not part of the purported inventive concept	

’111 Patent Claim 1	Exception	Factual And Legal Bases	Notes
		of the ’111 Patent. *See* generally Defendant’s Preliminary Invalidity Contentions Exs. D-1 through D-11 and E-4 at Claim 1. Claim 1 is not directed to the improvement of the routers, controllers, and/or data packets. Instead, Claim 1 is directed to the abstract idea of routing data based on information received from a controller. The Federal Circuit has recognized that to test if an idea is abstract, it is instructive to compare the claims at issue to claims already found to be directed to an abstract idea in previous cases. *See, e.g., OIP Techs., Inc. v. Amazon.com, Inc.*, 788 F.3d 1359, 1362 (Fed. Cir. 2015). Other courts have found that similar technologies are directed to patent ineligible abstract ideas. Some examples of cases that found similar abstract ideas include: *Telinit Techs., LLC v. Alteva, Inc.*, No. 2:14-CV-369, 2015 WL 5578604 (E.D. Tex. Sept. 21, 2015); *Magnacross LLC v. OKI Data Americas, Inc.*, No. 3:20-CV-01959-M, 2022 WL 992595, (N.D. Tex. Mar. 31, 2022); *Two-Way Media Ltd. v. Comcast Cable Communications, LLC*, 874 F.3d 1329 (Fed. Cir. 2017); *Elec. Power Grp., LLC v. Alstom S.A.*, 830 F.3d 1350 (Fed. Cir. 2016); *Intellectual Ventures I LLC v. Symantec Corp.*, 838 F.3d 1307, 1314 (Fed. Cir. 2016); and *Intellectual Ventures II LLC v. Sprint Spectrum, L.P.*, 2019 WL 7580245, at *4 (E.D. Tex. 2019). Thus, the ’111 Patent’s allegedly inventive concept, routing data based on information received from a controller , is an abstract idea that is not directed to an improvement in any of the well-known networking devices recited in Claim 1, and the ’111 Patent is invalid under *Alice* step 1. ***Alice Step 2:*** Neither the other elements of Claim 1, nor the ordered combination of these other elements, include an inventive concept. As explained above, all of the claimed elements, including the routers, controllers, and data packets, were well-known in the field of computer networking at the time of the ’111 Patent. As further explained	

’111 Patent Claim 1	Exception	Factual And Legal Bases	Notes
		above, the ’821 Patent admits that these elements were well-known, and the prior art confirms that fact. Additionally, the claimed architecture and order of claim elements was also well-known at this time. As shown below, this ordered combination of elements was well-known in the prior art: For example, Kempf discloses this architecture and combination from before the ’111 Patent.	

’111 Patent Claim 1	Exception	Factual And Legal Bases	Notes
		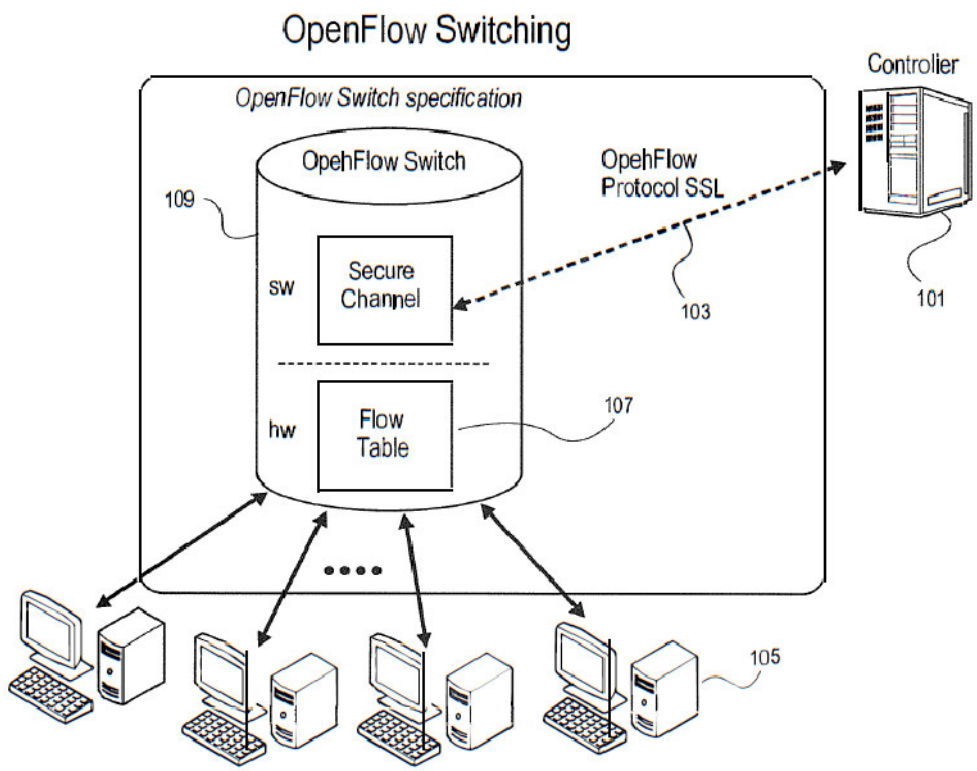 FIG. 1 Kempf at Fig. 1.	

’111 Patent Claim 1	Exception	Factual And Legal Bases	Notes
		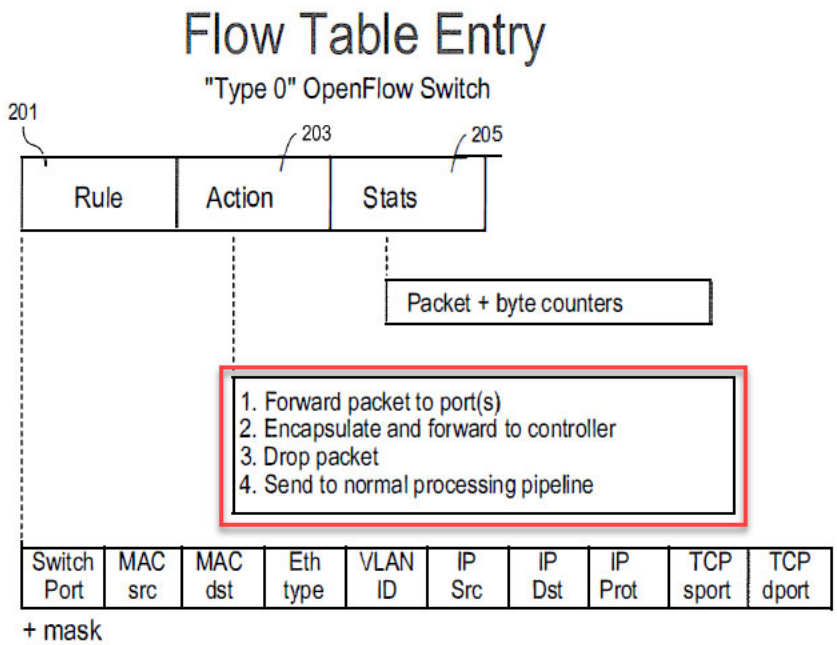 **FIG. 2** Kempf Fig. 2 (annotation added). As another example, Swenson discloses this architecture and combination from before the ’111 Patent.	

’111 Patent Claim 1	Exception	Factual And Legal Bases	Notes
		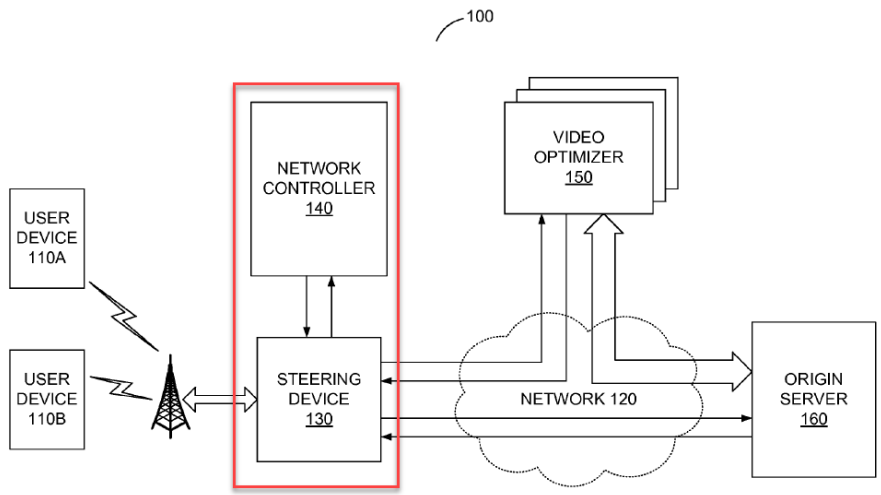 **FIG. 1** Swenson at Figure 1 (annotation added). As another example, Chandrasekaran discloses this architecture and combination from before the ’111 Patent.	

’111 Patent Claim 1	Exception	Factual And Legal Bases	Notes
		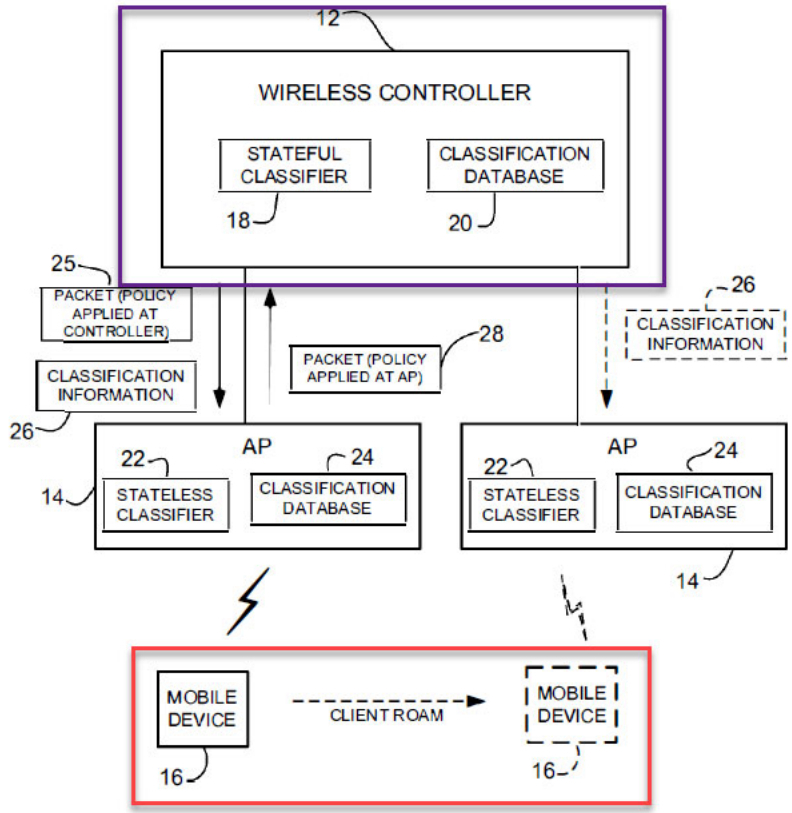 FIGURE 1 Chandrasekaran Fig. 1 (annotated). As another example, Lin ’400 discloses this architecture and combination from before the ’111 Patent.	

’111 Patent Claim 1	Exception	Factual And Legal Bases	Notes
		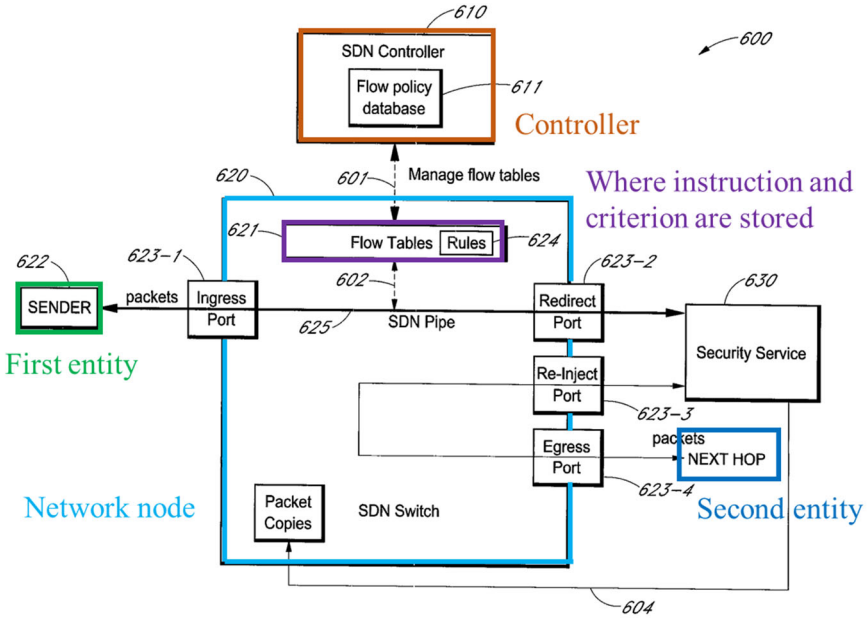 *FIG. 6* Lin ’400 Fig. 6 (annotation added). As another example, Shieh ’088 discloses this architecture and combination from before the ’111 Patent.	

’111 Patent Claim 1	Exception	Factual And Legal Bases	Notes
		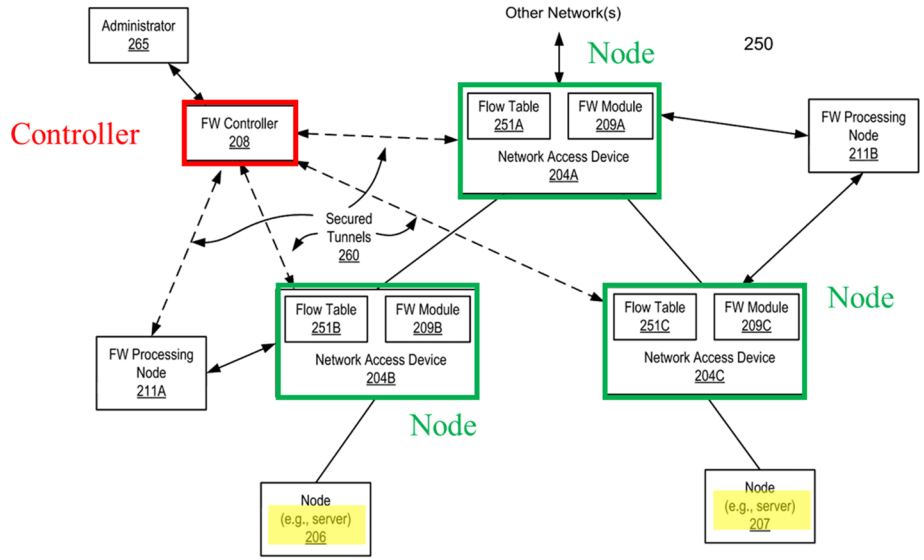 FIG. 2A Shieh ’088 Fig. 2A (annotation added). As another example, Cisco IWAN System discloses this architecture and combination from before the ’111 Patent.	

’111 Patent Claim 1	Exception	Factual And Legal Bases	Notes
		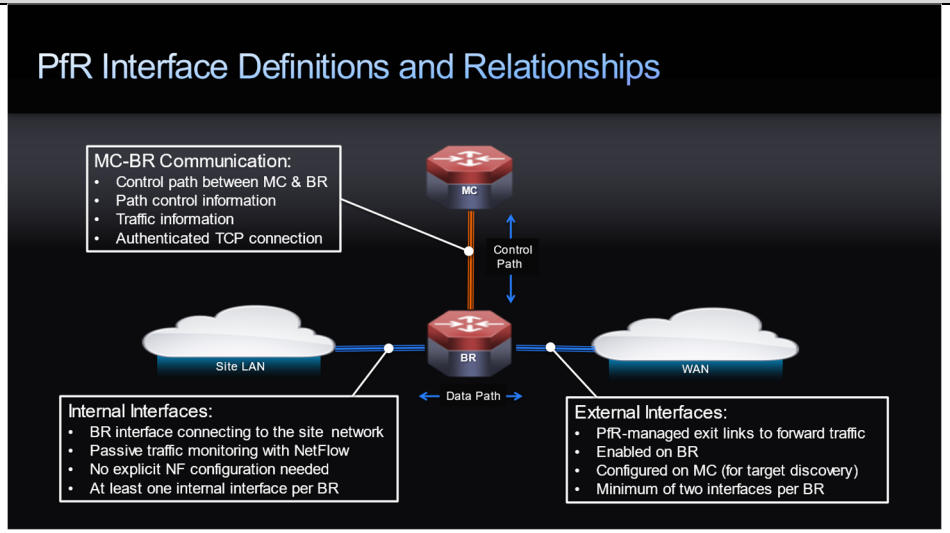 Cisco IWAN System (citing Cisco IWAN - Uncompromised Experience). As another example, VMware System discloses this architecture and combination from before the ’111 Patent.	

’111 Patent Claim 1	Exception	Factual And Legal Bases	Notes
		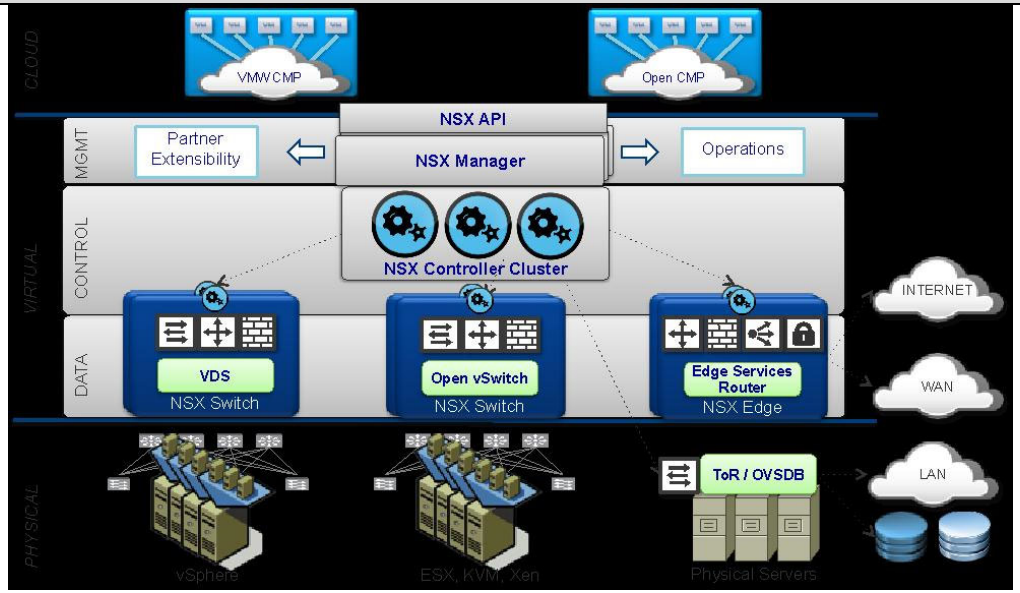 VMware NSX System (citing Introducing VMware NSX at 3-4.) As another example, Chua ’877 discloses this architecture and combination from before the ’111 Patent (and substantially similar disclosures can be found in Chua ’151).	

’111 Patent Claim 1	Exception	Factual And Legal Bases	Notes
		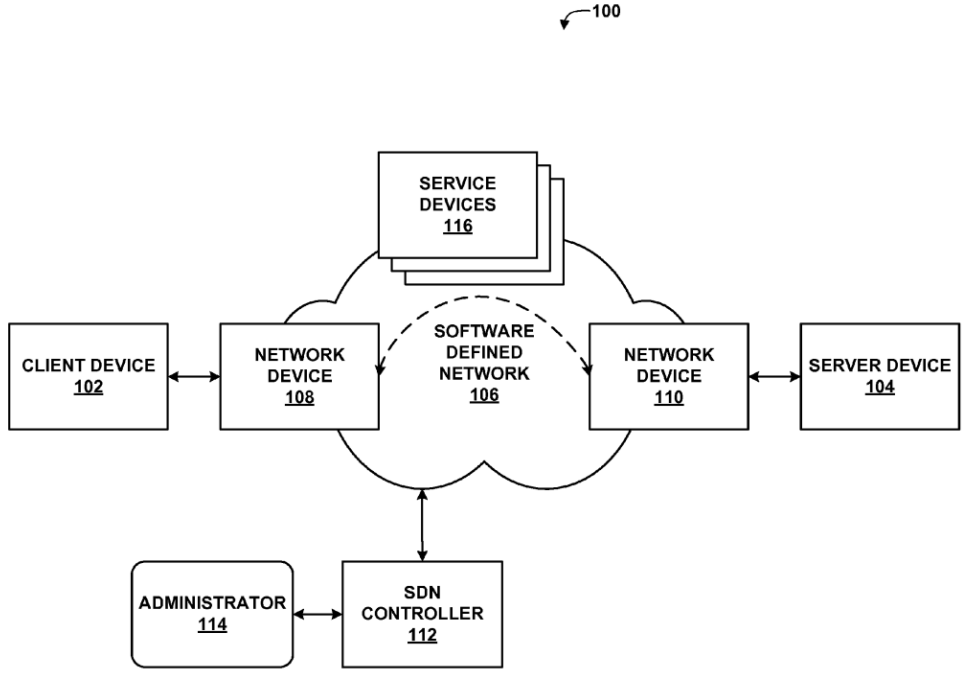 FIG. 1 Chua ‘877 at Figure 2	

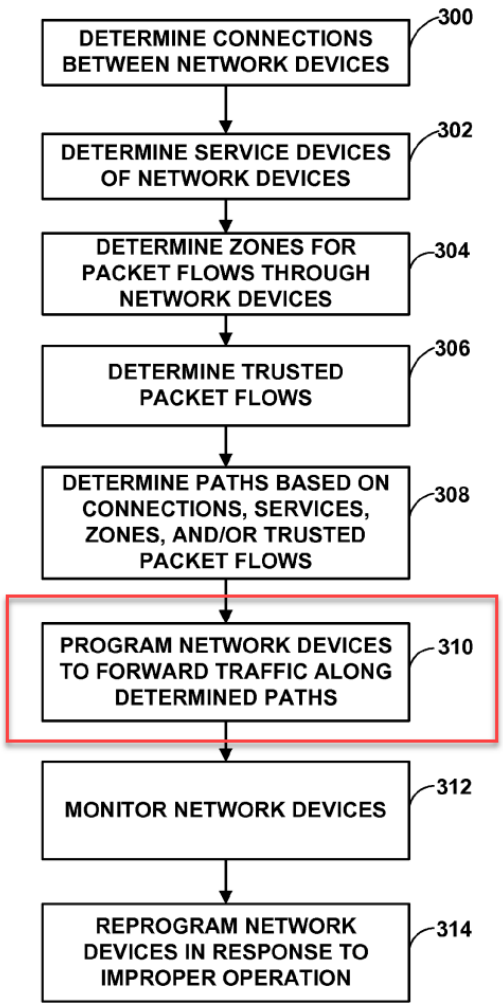

FIG. 5

Chua ’877 Fig. 2 (annotation added).

’111 Patent Claim 1	Exception	Factual And Legal Bases	Notes
		As another example, Copeland discloses this architecture and combination from before the ’111 Patent. 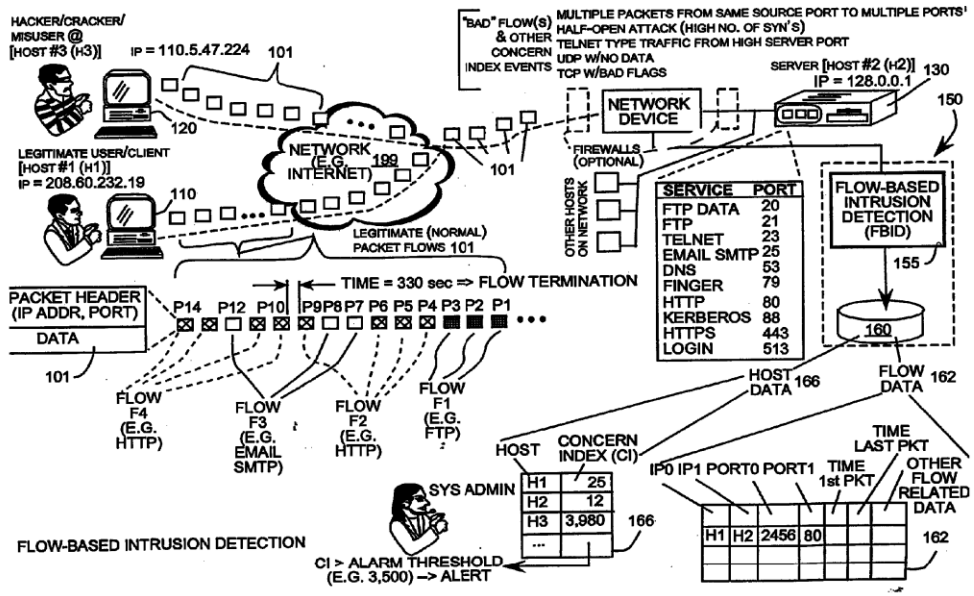 FIG. 1 Copeland Fig. 1. As another example, Uchida discloses this architecture and combination from before the ’111 Patent.	

’111 Patent Claim 1	Exception	Factual And Legal Bases	Notes
		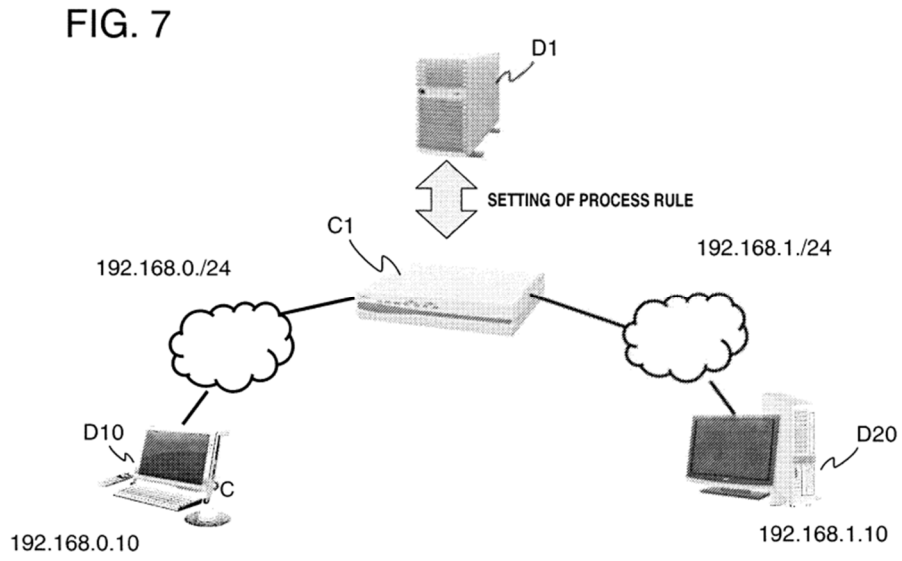 Uchida Fig. 7.	