US 20100257304A1

(19) United States

(12) Patent Application Publication

Rajan et al.

(10) Pub. No.: US 2010/0257304 A1

(43) Pub. Date: Oct. 7, 2010

(54) **APPARATUS AND METHOD FOR POWER MANAGEMENT OF MEMORY CIRCUITS BY A SYSTEM OR COMPONENT THEREOF**

(75) Inventors: **Suresh Natarajan Rajan**, San Jose, CA (US); **Michael John Sebastian Smith**, Palo Alto, CA (US); **David T. Wang**, San Jose, CA (US)

Correspondence Address:
FISH & RICHARDSON P.C.
PO BOX 1022
MINNEAPOLIS, MN 55440-1022 (US)

(73) Assignee: **GOOGLE INC.**, Mountain View, CA (US)

(21) Appl. No.: **12/816,756**

(22) Filed: **Jun. 16, 2010**

Related U.S. Application Data

(63) Continuation of application No. 11/538,041, filed on Oct. 2, 2006, which is a continuation-in-part of application No. 11/524,811, filed on Sep. 20, 2006, now Pat. No. 7,590,796, which is a continuation-in-part of application No. 11/461,439, filed on Jul. 31, 2006, now Pat. No. 7,580,312.

Publication Classification

(51) **Int. Cl.**

G06F 12/08	(2006.01)
G06F 12/00	(2006.01)
G06F 13/372	(2006.01)

(52) **U.S. Cl.** **711/6**; 711/105; 710/117; 711/E12.016; 711/E12.001

(57) **ABSTRACT**

An apparatus and method are provided for communicating with a plurality of physical memory circuits. In use, at least one virtual memory circuit is simulated where at least one aspect (e.g. power-related aspect, etc.) of such virtual memory circuit(s) is different from at least one aspect of at least one of the physical memory circuits. Further, in various embodiments, such simulation may be carried out by a system (or component thereof), an interface circuit, etc.

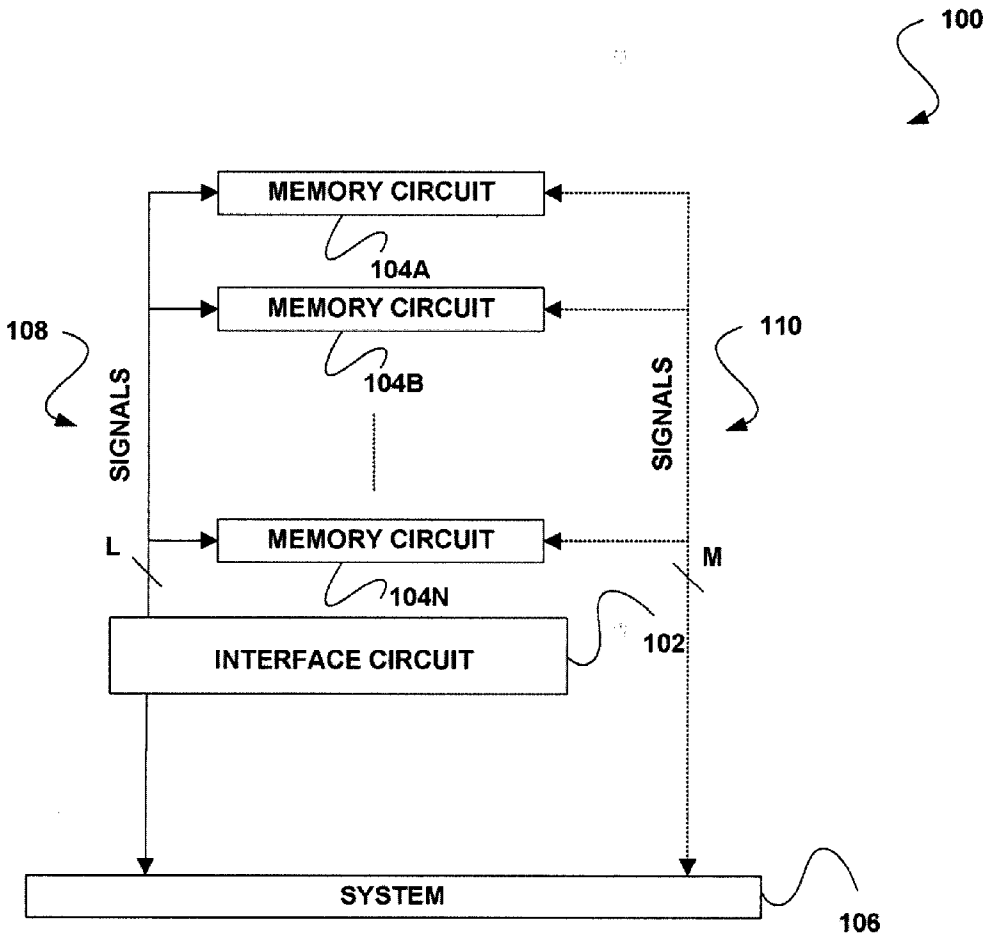

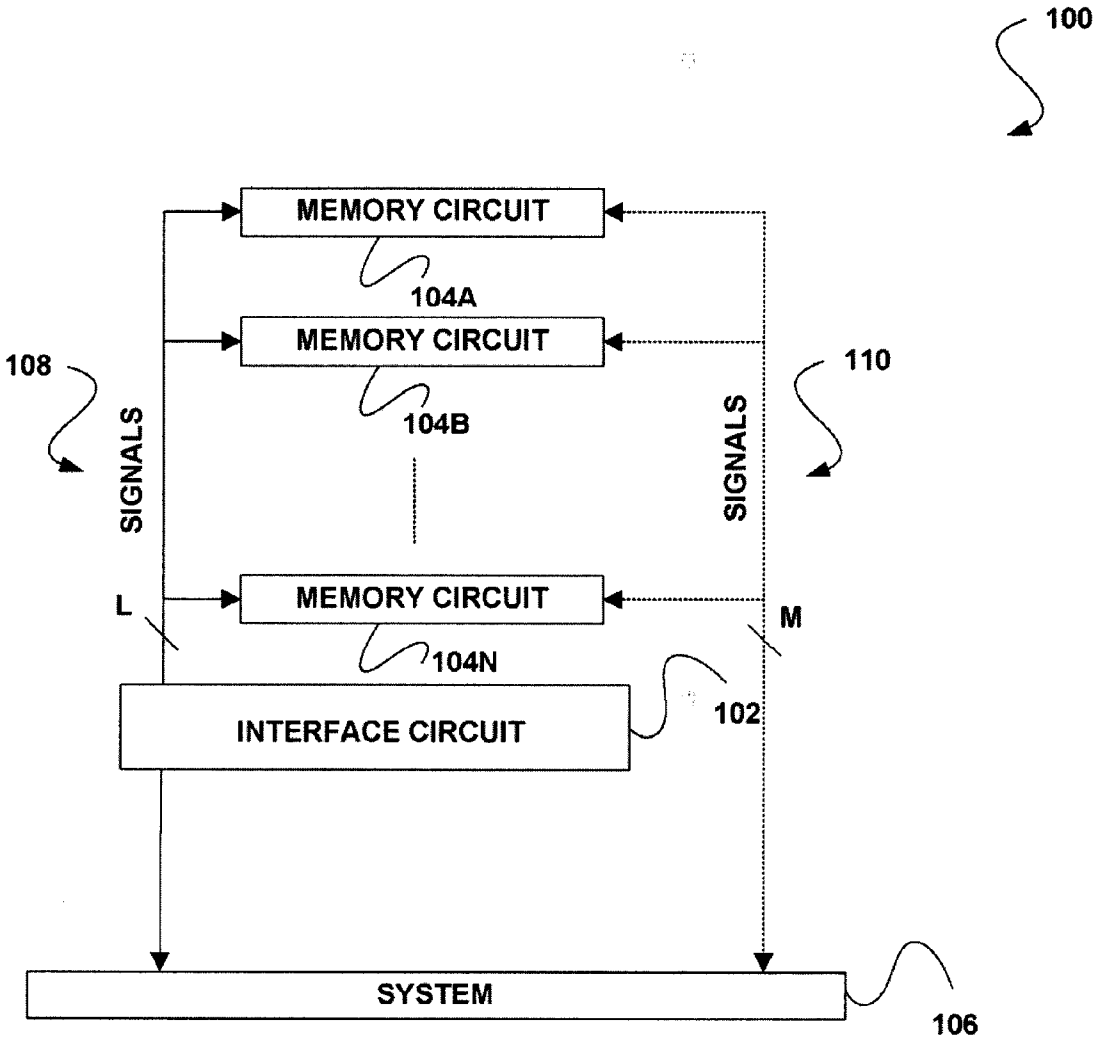
100
MEMORY CIRCUIT
104A
MEMORY CIRCUIT
104B
108
110
SIGNALS
SIGNALS
MEMORY CIRCUIT
104N
L
M
INTERFACE CIRCUIT
102
SYSTEM
106

FIGURE 1

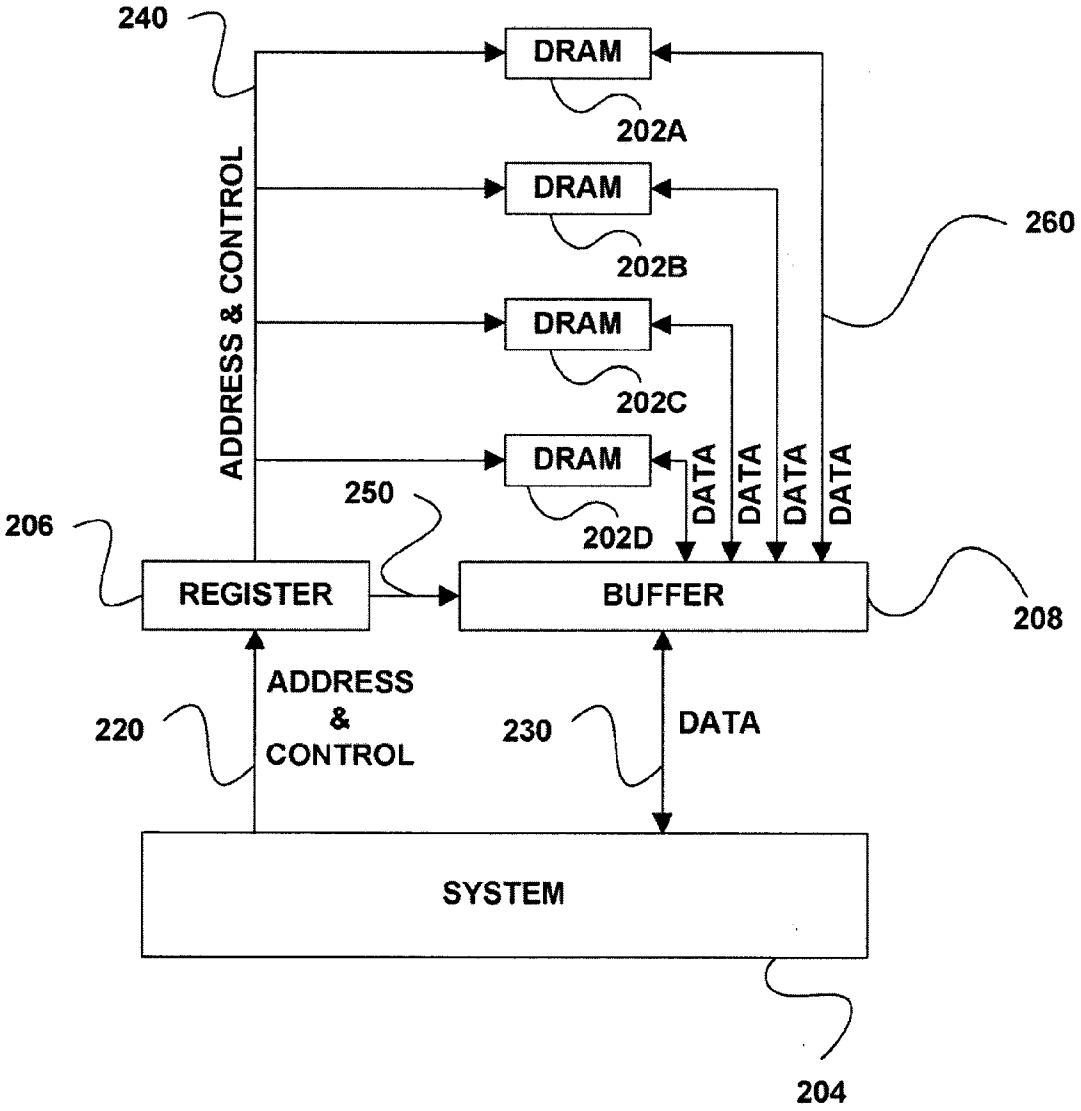
240
DRAM
202A
DRAM
202B
DRAM
202C
DRAM
202D
ADDRESS & CONTROL
DATA
DATA
DATA
DATA
260
250
206
REGISTER
BUFFER
208
ADDRESS
&
CONTROL
220
230
DATA
SYSTEM
204

FIGURE 2

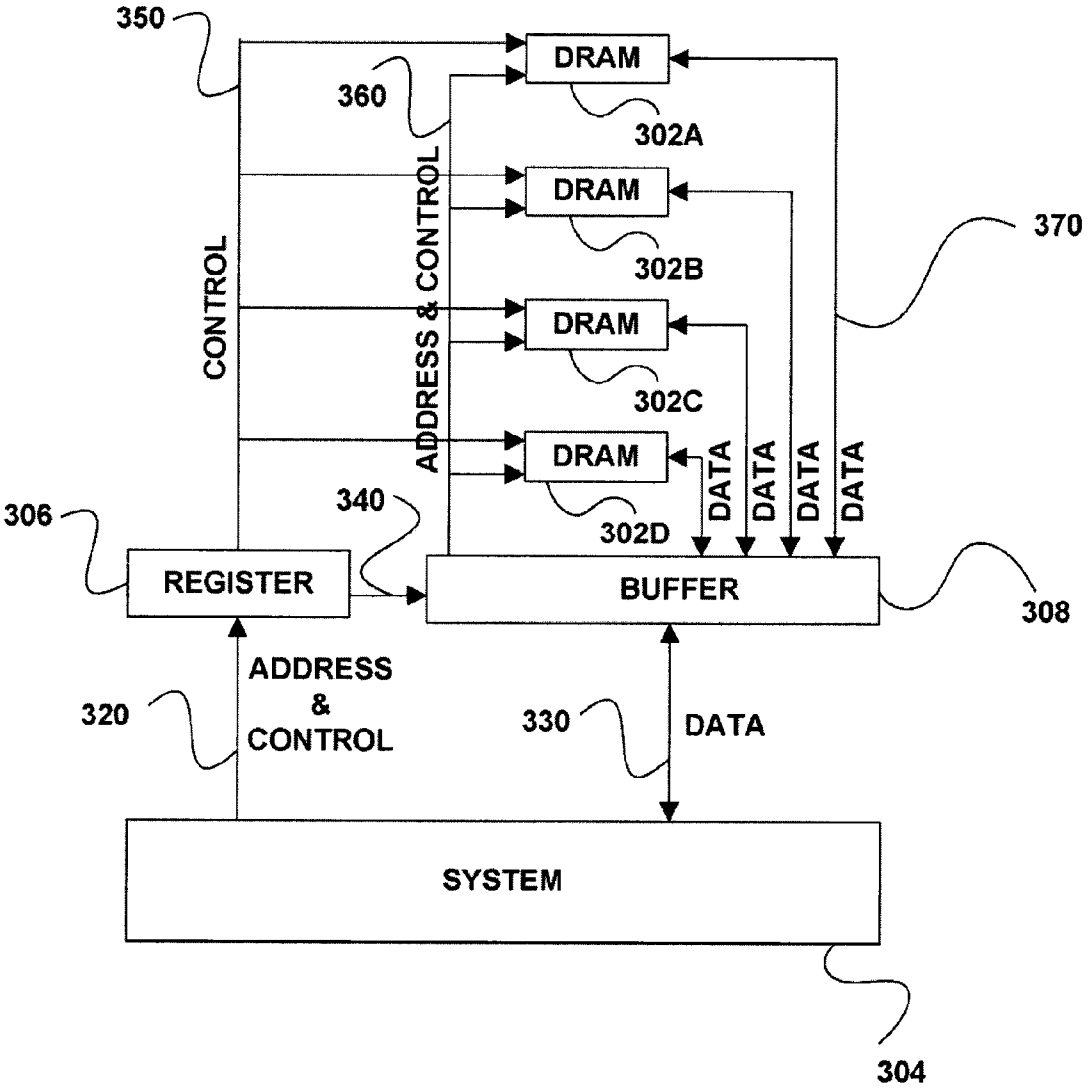
350
360
DRAM
302A
DRAM
302B
DRAM
302C
DRAM
302D
370
CONTROL
ADDRESS & CONTROL
DATA
DATA
DATA
DATA
306
340
REGISTER
BUFFER
308
ADDRESS
&
CONTROL
320
330
DATA
SYSTEM
304

FIGURE 3

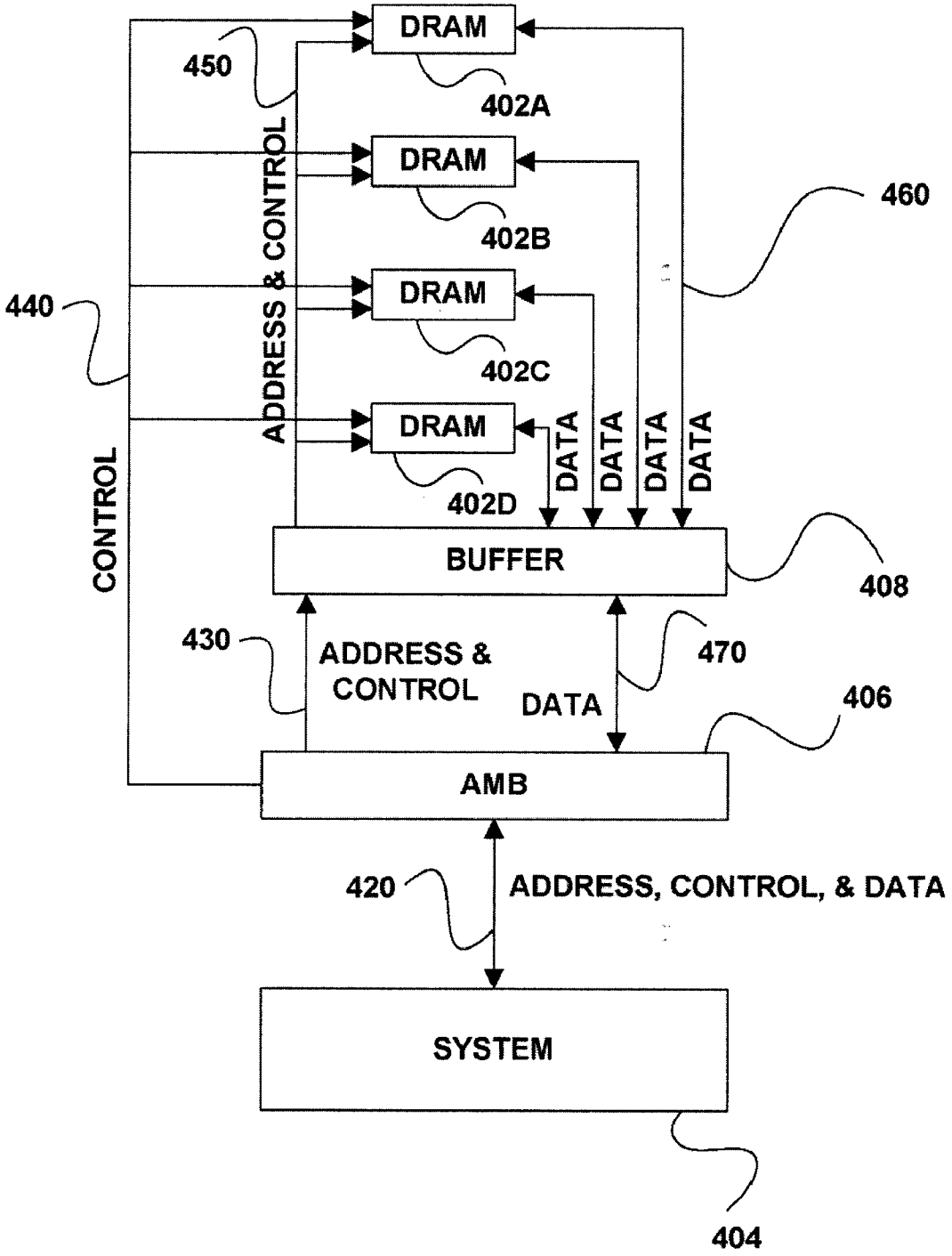
DRAM
DRAM
DRAM
DRAM
450
402A
402B
402C
402D
460
440
ADDRESS & CONTROL
CONTROL
DATA
DATA
DATA
DATA
BUFFER
408
430
ADDRESS &
CONTROL
470
DATA
406
AMB
420
ADDRESS, CONTROL, & DATA
SYSTEM
404

FIGURE 4

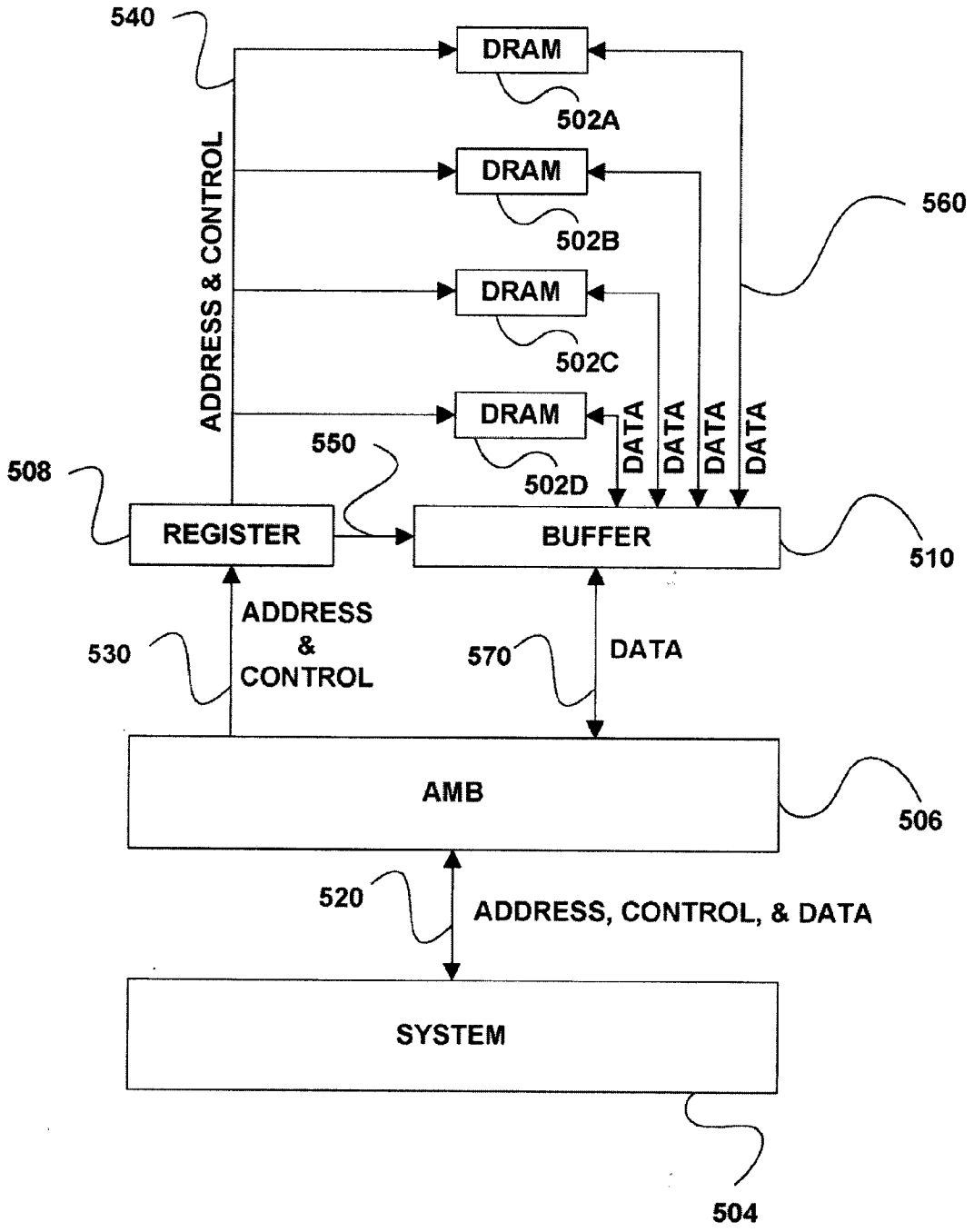
540
DRAM
502A
DRAM
502B
DRAM
502C
DRAM
502D
ADDRESS & CONTROL
560
DATA
DATA
DATA
DATA
508
550
REGISTER
BUFFER
510
ADDRESS
&
CONTROL
530
570
DATA
AMB
506
520
ADDRESS, CONTROL, & DATA
SYSTEM
504

FIGURE 5

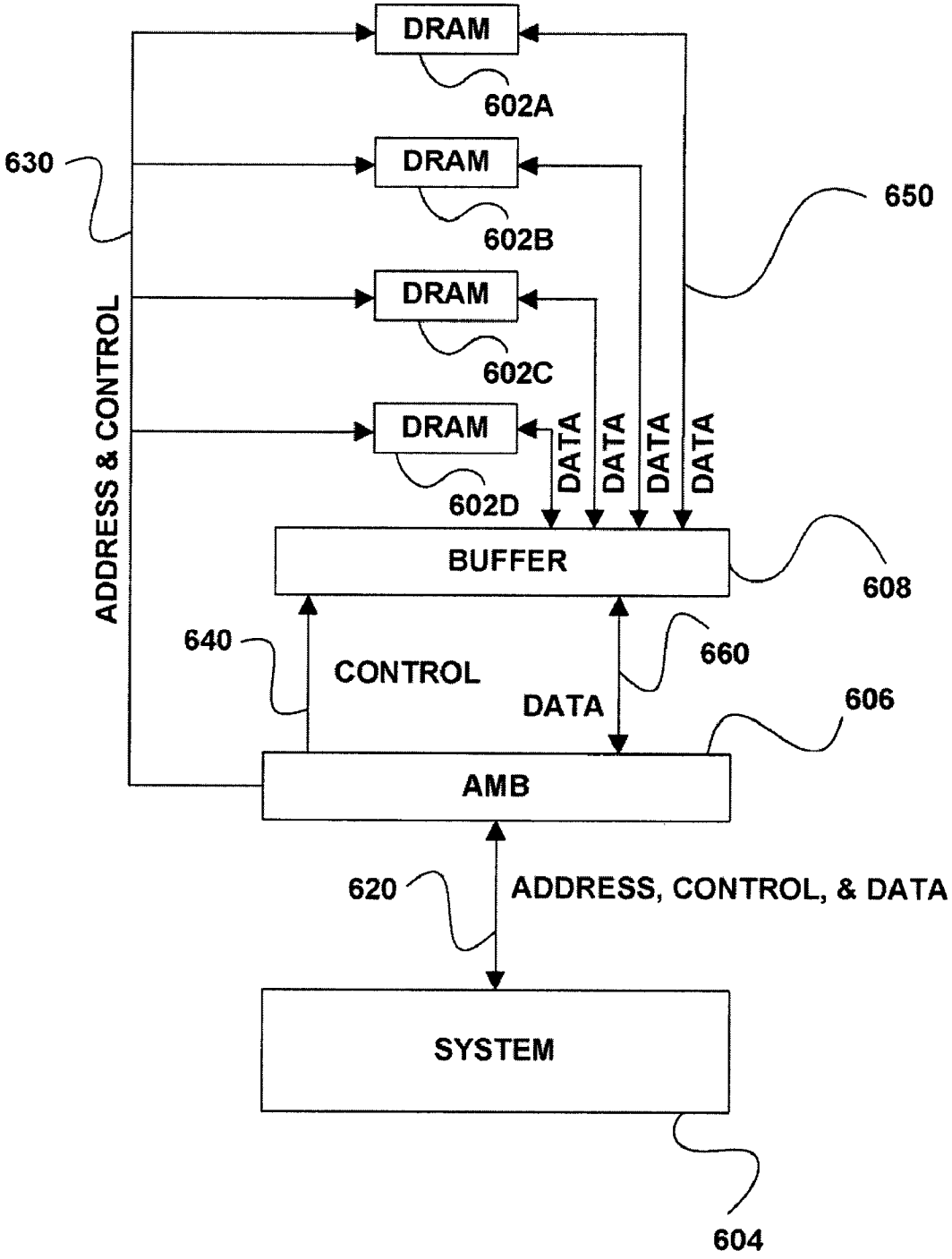
DRAM
602A
DRAM
602B
DRAM
602C
DRAM
602D
630
650
ADDRESS & CONTROL
DATA
DATA
DATA
DATA
BUFFER
608
640
CONTROL
660
DATA
606
AMB
620
ADDRESS, CONTROL, & DATA
SYSTEM
604

FIGURE 6

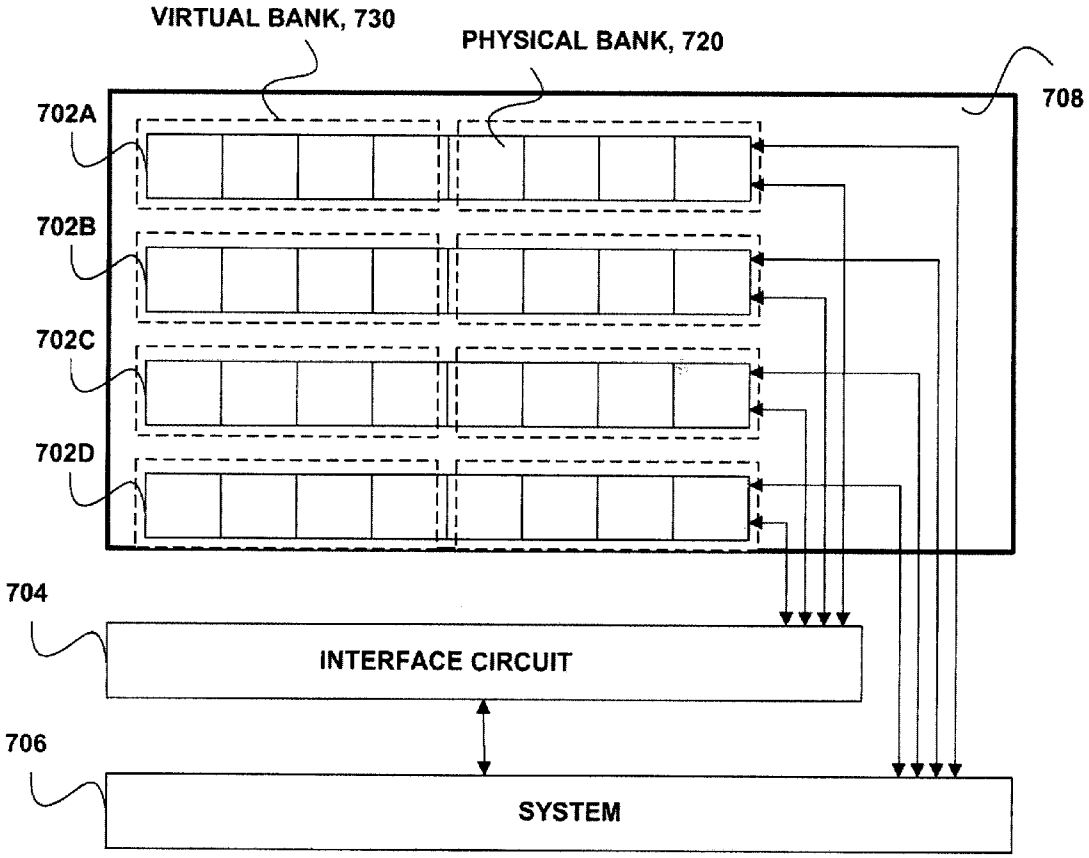
VIRTUAL BANK, 730
PHYSICAL BANK, 720
708
702A
702B
702C
702D
704
INTERFACE CIRCUIT
706
SYSTEM

FIGURE 7

APPARATUS AND METHOD FOR POWER MANAGEMENT OF MEMORY CIRCUITS BY A SYSTEM OR COMPONENT THEREOF

RELATED APPLICATION(S)

[0001] The present application is a continuation of an application entitled "APPARATUS AND METHOD FOR POWER MANAGEMENT OF MEMORY CIRCUITS BY A SYSTEM OR COMPONENT THEREOF" and filed Oct. 2, 2006 under application Ser. No. 11/538,041 which, in turn is a continuation-in-part of an application entitled "SYSTEM AND METHOD FOR POWER MANAGEMENT IN MEMORY SYSTEMS" and filed Sep. 20, 2006 under application Ser. No. 11/524,811, and issued as U.S. Pat. No. 7,590,796 on Sep. 15, 2009 which, in turn, is a continuation-in-part of an application entitled "POWER SAVING SYSTEM AND METHOD FOR USE WITH A PLURALITY OF MEMORY CIRCUITS" and filed Jul. 31, 2006 under application Ser. No. 11/461,439, and issued as U.S. Pat. No. 7,580,312 on Aug. 25, 2009 which are each incorporated herein by reference for all purposes. However, insofar as any definitions, information used for claim interpretation, etc. from the above parent applications conflict with that set forth herein, such definitions, information, etc. in the present application should apply.

FIELD OF THE INVENTION

[0002] The present invention relates to memory, and more particularly to power management in memory systems that contain multiple memory circuits.

BACKGROUND

[0003] The memory capacity requirements of various systems are increasing rapidly. However, other industry trends such as higher memory bus speeds and small form factor machines, etc. are reducing the number of memory module slots in such systems. Thus, a need exists in the industry for larger capacity memory circuits to be used in such systems.

[0004] However, there is also a limit to the power that may be dissipated per unit volume in the space available to the memory circuits. As a result, large capacity memory modules may be limited in terms of power that the memory modules may dissipate, and/or limited in terms of the ability of power supply systems to deliver sufficient power to such memory modules. There is thus a need for overcoming these limitations and/or other problems associated with the prior art.

SUMMARY

[0005] An apparatus and method are provided for communicating with a plurality of physical memory circuits. In use, at least one virtual memory circuit is simulated where at least one aspect (e.g. power-related aspect, etc.) of such virtual memory circuit(s) is different from at least one aspect of at least one of the physical memory circuits. Further, in various embodiments, such simulation may be carried out by a system (or component thereof), an interface circuit, etc.

BRIEF DESCRIPTION OF THE DRAWINGS

[0006] FIG. **1** illustrates a multiple memory circuit framework, in accordance with one embodiment.

[0007] FIG. **2** shows an exemplary embodiment of an interface circuit including a register and a buffer that is operable to interface memory circuits and a system.

[0008] FIG. **3** shows an alternative exemplary embodiment of an interface circuit including a register and a buffer that is operable to interface memory circuits and a system.

[0009] FIG. **4** shows an exemplary embodiment of an interface circuit including an advanced memory buffer (AMB) and a buffer that is operable to interface memory circuits and a system.

[0010] FIG. **5** shows an exemplary embodiment of an interface circuit including an AMB, a register, and a buffer that is operable to interface memory circuits and a system.

[0011] FIG. **6** shows an alternative exemplary embodiment of an interface circuit including an AMB and a buffer that is operable to interface memory circuits and a system.

[0012] FIG. **7** shows an exemplary embodiment of a plurality of physical memory circuits that are mapped by a system, and optionally an interface circuit, to appear as a virtual memory circuit with one aspect that is different from that of the physical memory circuits.

DETAILED DESCRIPTION

[0013] FIG. **1** illustrates a multiple memory circuit framework **100**, in accordance with one embodiment. As shown, included are an interface circuit **102**, a plurality of memory circuits **104**A, **104**B, **104**N, and a system **106**. In the context of the present description, such memory circuits **104**A, **104**B, **104**N may include any circuit capable of serving as memory.

[0014] For example, in various embodiments, at least one of the memory circuits **104**A, **104**B, **104**N may include a monolithic memory circuit, a semiconductor die, a chip, a packaged memory circuit, or any other type of tangible memory circuit. In one embodiment, the memory circuits **104**A, **104**B, **104**N may take the form of a dynamic random access memory (DRAM) circuit. Such DRAM may take any form including, but not limited to, synchronous DRAM (SDRAM), double data rate synchronous DRAM (DDR SDRAM, DDR2 SDRAM, DDR3 SDRAM, etc.), graphics double data rate synchronous DRAM (GDDR SDRAM, GDDR2 SDRAM, GDDR3 SDRAM, etc.), quad data rate DRAM (QDR DRAM), RAMBUS XDR DRAM (SDR DRAM), fast page mode DRAM (FPM DRAM), video DRAM (VDRAM), extended data out DRAM (EDO DRAM), burst EDO RAM (BEDO DRAM), multibank DRAM (MDRAM), synchronous graphics RAM (SGRAM), and/or any other type of DRAM.

[0015] In another embodiment, at least one of the memory circuits **104**A, **104**B, **104**N may include magnetic random access memory (MRAM), intelligent random access memory (IRAM), distributed network architecture (DNA) memory, window random access memory (WRAM), flash memory (e.g. NAND, NOR, etc.), pseudostatic random access memory (PSRAM), Low-Power Synchronous Dynamic Random Access Memory (LP-SDRAM), Polymer Ferroelectric RAM (PFRAM), OVONICS Unified Memory (OUM) or other chalcogenide memory, Phase-change Memory (PCM), Phase-change Random Access Memory (PRAM), Ferrolectric RAM (FeRAM), REsistance RAM (R-RAM or RRAM), wetware memory, memory based on semiconductor, atomic, molecular, optical, organic, biological, chemical, or nanoscale technology, and/or any other type of volatile or nonvolatile, random or non-random access, serial or parallel access memory circuit.

[0016] Strictly, as an option, the memory circuits **104**A, **104**B, **104**N may or may not be positioned on at least one dual in-line memory module (DIMM) (not shown). In various

embodiments, the DIMM may include a registered DIMM (R-DIMM), a small outline-DIMM (SO-DIMM), a fully buffered DIMM (FB-DIMM), an unbuffered DIMM (UDIMM), single inline memory module (SIMM), a MiniDIMM, a very low profile (VLP) R-DIMM, etc. In other embodiments, the memory circuits **104**A, **104**B, **104**N may or may not be positioned on any type of material forming a substrate, card, module, sheet, fabric, board, carrier or other any other type of solid or flexible entity, form, or object. Of course, in other embodiments, the memory circuits **104**A, **104**B, **104**N may or may not be positioned in or on any desired entity, form, or object for packaging purposes. Still yet, the memory circuits **104**A, **104**B, **104**N may or may not be organized, either as a group (or as groups) collectively, or individually, onto one or more portions(s). In the context of the present description, the term portion(s) (e.g. of a memory circuit(s)) shall refer to any physical, logical or electrical arrangement(s), partition(s), subdivisions(s) (e.g. banks, sub-banks, ranks, sub-ranks, rows, columns, pages, etc.), or any other portion(s), for that matter.

[0017] Further, in the context of the present description, the system **106** may include any system capable of requesting and/or initiating a process that results in an access of the memory circuits **104**A, **104**B, **104**N. As an option, the system **106** may accomplish this utilizing a memory controller (not shown), or any other desired mechanism. In one embodiment, such system **106** may include a system in the form of a desktop computer, a lap-top computer, a server, a storage system, a networking system, a workstation, a personal digital assistant (PDA), a mobile phone, a television, a computer peripheral (e.g. printer, etc.), a consumer electronics system, a communication system, and/or any other software and/or hardware, for that matter.

[0018] The interface circuit **102** may, in the context of the present description, refer to any circuit capable of communicating (e.g. interfacing, buffering, etc.) with the memory circuits **104**A, **104**B, **104**N and the system **106**. For example, the interface circuit **102** may, in the context of different embodiments, include a circuit capable of directly (e.g. via wire, bus, connector, and/or any other direct communication medium, etc.) and/or indirectly (e.g. via wireless, optical, capacitive, electric field, magnetic field, electromagnetic field, and/or any other indirect communication medium, etc.) communicating with the memory circuits **104**A, **104**B, **104**N and the system **106**. In additional different embodiments, the communication may use a direct connection (e.g. point-to-point, single-drop bus, multi-drop bus, serial bus, parallel bus, link, and/or any other direct connection, etc.) or may use an indirect connection (e.g. through intermediate circuits, intermediate logic, an intermediate bus or busses, and/or any other indirect connection, etc.).

[0019] In additional optional embodiments, the interface circuit **102** may include one or more circuits, such as a buffer (e.g. buffer chip, multiplexer/de-multiplexer chip, synchronous multiplexer/de-multiplexer chip, etc.), register (e.g. register chip, data register chip, address/control register chip, etc.), advanced memory buffer (AMB) (e.g. AMB chip, etc.), a component positioned on at least one DIMM, etc.

[0020] In various embodiments and in the context of the present description, a buffer chip may be used to interface bidirectional data signals, and may or may not use a clock to re-time or re-synchronize signals in a well known manner. A bidirectional signal is a well known use of a single connection to transmit data in two directions. A data register chip may be a register chip that also interfaces bidirectional data signals. A multiplexer/de-multiplexer chip is a well known circuit that may interface a first number of bidirectional signals to a second number of bidirectional signals. A synchronous multiplexer/de-multiplexer chip may additionally use a clock to re-time or re-synchronize the first or second number of signals. In the context of the present description, a register chip may be used to interface and optionally re-time or re-synchronize address and control signals. The term address/control register chip may be used to distinguish a register chip that only interfaces address and control signals from a data register chip, which may also interface data signals.

[0021] Moreover, the register may, in various embodiments, include a JEDEC Solid State Technology Association (known as JEDEC) standard register (a JEDEC register), a register with forwarding, storing, and/or buffering capabilities, etc. In various embodiments, the registers, buffers, and/or any other interface circuit(s) **102** may be intelligent, that is, include logic that are capable of one or more functions such as gathering and/or storing information; inferring, predicting, and/or storing state and/or status; performing logical decisions; and/or performing operations on input signals, etc. In still other embodiments, the interface circuit **102** may optionally be manufactured in monolithic form, packaged form, printed form, and/or any other manufactured form of circuit, for that matter.

[0022] In still yet another embodiment, a plurality of the aforementioned interface circuits **102** may serve, in combination, to interface the memory circuits **104**A, **104**B, **104**N and the system **106**. Thus, in various embodiments, one, two, three, four, or more interface circuits **102** may be utilized for such interfacing purposes. In addition, multiple interface circuits **102** may be relatively configured or connected in any desired manner. For example, the interface circuits **102** may be configured or connected in parallel, serially, or in various combinations thereof. The multiple interface circuits **102** may use direct connections to each other, indirect connections to each other, or even a combination thereof. Furthermore, any number of the interface circuits **102** may be allocated to any number of the memory circuits **104**A, **104**B, **104**N. In various other embodiments, each of the plurality of interface circuits **102** may be the same or different. Even still, the interface circuits **102** may share the same or similar interface tasks and/or perform different interface tasks.

[0023] While the memory circuits **104**A, **104**B, **104**N, interface circuit **102**, and system **106** are shown to be separate parts, it is contemplated that any of such parts (or portion(s) thereof) may be integrated in any desired manner. In various embodiments, such optional integration may involve simply packaging such parts together (e.g. stacking the parts to form a stack of DRAM circuits, a DRAM stack, a plurality of DRAM stacks, a hardware stack, where a stack may refer to any bundle, collection, or grouping of parts and/or circuits, etc.) and/or integrating them monolithically. Just by way of example, in one optional embodiment, at least one interface circuit **102** (or portion(s) thereof) may be packaged with at least one of the memory circuits **104**A, **104**B, **104**N. Thus, a DRAM stack may or may not include at least one interface circuit (or portion(s) thereof). In other embodiments, different numbers of the interface circuit **102** (or portions(s) thereof) may be packaged together. Such different packaging arrangements, when employed, may optionally improve the utilization of a monolithic silicon implementation, for example.

[0024] The interface circuit **102** may be capable of various functionality, in the context of different embodiments. For example, in one optional embodiment, the interface circuit **102** may interface a plurality of signals **108** that are connected between the memory circuits **104**A, **104**B, **104**N and the system **106**. The signals **108** may, for example, include address signals, data signals, control signals, enable signals, clock signals, reset signals, or any other signal used to operate or associated with the memory circuits, system, or interface circuit(s), etc. In some optional embodiments, the signals may be those that: use a direct connection, use an indirect connection, use a dedicated connection, may be encoded across several connections, and/or may be otherwise encoded (e.g. time-multiplexed, etc.) across one or more connections.

[0025] In one aspect of the present embodiment, the interfaced signals **108** may represent all of the signals that are connected between the memory circuits **104**A, **104**B, **104**N and the system **106**. In other aspects, at least a portion of signals **110** may use direct connections between the memory circuits **104**A, **104**B, **104**N and the system **106**. The signals **110** may, for example, include address signals, data signals, control signals, enable signals, clock signals, reset signals, or any other signal used to operate or associated with the memory circuits, system, or interface circuit(s), etc. In some optional embodiments, the signals may be those that: use a direct connection, use an indirect connection, use a dedicated connection, may be encoded across several connections, and/or may be otherwise encoded (e.g. time-multiplexed, etc.) across one or more connections. Moreover, the number of interfaced signals **108** (e.g. vs. a number of the signals that use direct connections **110**, etc.) may vary such that the interfaced signals **108** may include at least a majority of the total number of signal connections between the memory circuits **104**A, **104**B, **104**N and the systems **106** (e.g. L>M, with L and M as shown in FIG. **1**). In other embodiments, L may be less than or equal to M. In still other embodiments L and/or M may be zero.

[0026] In yet another embodiment, the interface circuit **102** and/or any component of the system **106** may or may not be operable to communicate with the memory circuits **104**A, **104**B, **104**N for simulating at least one memory circuit. The memory circuits **104**A, **104**B, **104**N shall hereafter be referred to, where appropriate for clarification purposes, as the "physical" memory circuits or memory circuits, but are not limited to be so. Just by way of example, the physical memory circuits may include a single physical memory circuit. Further, the at least one simulated memory circuit shall hereafter be referred to, where appropriate for clarification purposes, as the at least one "virtual" memory circuit. In a similar fashion any property or aspect of such a physical memory circuit shall be referred to, where appropriate for clarification purposes, as a physical aspect (e.g. physical bank, physical portion, physical timing parameter, etc.). Further, any property or aspect of such a virtual memory circuit shall be referred to, where appropriate for clarification purposes, as a virtual aspect (e.g. virtual bank, virtual portion, virtual timing parameter, etc.).

[0027] In the context of the present description, the term simulate or simulation may refer to any simulating, emulating, transforming, disguising modifying, changing, altering, shaping, converting, etc., of at least one aspect of the memory circuits. In different embodiments, such aspect may include, for example, a number, a signal, a capacity, a portion (e.g. bank, partition, etc.), an organization (e.g. bank organization, etc.), a mapping (e.g. address mapping, etc.), a timing, a latency, a design parameter, a logical interface, a control system, a property, a behavior, and/or any other aspect, for that matter. Still yet, in various embodiments, any of the previous aspects or any other aspect, for that matter, may be power-related, meaning that such power-related aspect, at least in part, directly or indirectly affects power.

[0028] In different embodiments, the simulation may be electrical in nature, logical in nature, protocol in nature, and/or performed in any other desired manner. For instance, in the context of electrical simulation, a number of pins, wires, signals, etc. may be simulated. In the context of logical simulation, a particular function or behavior may be simulated. In the context of protocol, a particular protocol (e.g. DDR3, etc.) may be simulated. Further, in the context of protocol, the simulation may effect conversion between different protocols (e.g. DDR2 and DDR3) or may effect conversion between different versions of the same protocol (e.g. conversion of 4-4-4 DDR2 to 6-6-6 DDR2).

[0029] In still additional exemplary embodiments, the aforementioned virtual aspect may be simulated (e.g. simulate a virtual aspect, the simulation of a virtual aspect, a simulated virtual aspect etc.). Further, in the context of the present description, the terms map, mapping, mapped, etc. refer to the link or connection from the physical aspects to the virtual aspects (e.g. map a physical aspect to a virtual aspect, mapping a physical aspect to a virtual aspect, a physical aspect mapped to a virtual aspect etc.). It should be noted that any use of such mapping or anything equivalent thereto is deemed to fall within the scope of the previously defined simulate or simulation term.

[0030] More illustrative information will now be set forth regarding optional functionality/architecture of different embodiments which may or may not be implemented in the context of FIG. **1**, per the desires of the user. It should be strongly noted that the following information is set forth for illustrative purposes and should not be construed as limiting in any manner. For example, any of the following features may be optionally incorporated with or without the other features described.

[0031] FIG. **2** shows an exemplary embodiment of an interface circuit that is operable to interface memory circuits **202**A-D and a system **204**. In this embodiment, the interface circuit includes a register **206** and a buffer **208**. Address and control signals **220** from the system **204** are connected to the register **206**, while data signals **230** from the system **204** are connected to the buffer **208**. The register **206** drives address and control signals **240** to the memory circuits **202**A-D and optionally drives address and control signals **250** to the buffer **208**. Data signals **260** of the memory circuits **202**A-D are connected to the buffer **208**.

[0032] FIG. **3** shows an exemplary embodiment of an interface circuit that is operable to interface memory circuits **302**A-D and a system **304**. In this embodiment, the interface circuit includes a register **306** and a buffer **308**. Address and control signals **320** from the system **304** are connected to the register **306**, while data signals **330** from the system **304** are connected to the buffer **308**. The register **306** drives address and control signals **340** to the buffer **308**, and optionally drives control signals **350** to the memory circuits **302**A-D. The buffer **308** drives address and control signals **360**. Data signals **370** of the memory circuits **304**A-D are connected to the buffer **308**.

[0033] FIG. **4** shows an exemplary embodiment of an interface circuit that is operable to interface memory circuits **402**A-D and a system **404**. In this embodiment, the interface circuit includes an advanced memory buffer (AMB) **406** and a buffer **408**. Address, control, and data signals **420** from the system **404** are connected to the AMB **406**. The AMB **406** drives address and control signals **430** to the buffer **408** and optionally drives control signals **440** to the memory circuits **402**A-D. The buffer **408** drives address and control signals **450**. Data signals **460** of the memory circuits **402**A-D are connected to the buffer **408**. Data signals **470** of the buffer **408** are connected to the AMB **406**.

[0034] FIG. **5** shows an exemplary embodiment of an interface circuit that is operable to interface memory circuits **502**A-D and a system **504**. In this embodiment, the interface circuit includes an AMB **506**, a register **508**, and a buffer **510**. Address, control, and data signals **520** from the system **504** are connected to the AMB **506**. The AMB **506** drives address and control signals **530** to the register **508**. The register, in turn, drives address and control signals **540** to the memory circuits **502**A-D. It also optionally drives control signals **550** to the buffer **510**. Data signals **560** from the memory circuits **502**A-D are connected to the buffer **510**. Data signals **570** of the buffer **510** are connected to the AMB **506**.

[0035] FIG. **6** shows an exemplary embodiment of an interface circuit that is operable to interface memory circuits **602**A-D and a system **604**. In this embodiment, the interface circuit includes an AMB **606** and a buffer **608**. Address, control, and data signals **620** from the system **604** are connected to the AMB **606**. The AMB **606** drives address and control signals **630** to the memory circuits **602**A-D as well as control signals **640** to the buffer **608**. Data signals **650** from the memory circuits **602**A-D are connected to the buffer **608**. Data signals **660** are connected between the buffer **608** and the AMB **606**.

[0036] In other embodiments, combinations of the above implementations shown in FIGS. **2-6** may be utilized. Just by way of example, one or more registers (register chip, address/control register chip, data register chip, JEDEC register, etc.) may be utilized in conjunction with one or more buffers (e.g. buffer chip, multiplexer/de-multiplexer chip, synchronous multiplexer/de-multiplexer chip and/or other intelligent interface circuits) with one or more AMBs (e.g. AMB chip, etc.). In other embodiments, these register(s), buffer(s), AMB(s) may be utilized alone and/or integrated in groups and/or integrated with or without the memory circuits.

[0037] The electrical connections between the buffer(s), the register(s), the AMB(s) and the memory circuits may be configured in any desired manner. In one optional embodiment, address, control (e.g. command, etc.), and clock signals may be common to all memory circuits (e.g. using one common bus). As another option, there may be multiple address, control and clock busses. As yet another option, there may be individual address, control and clock busses to each memory circuit. Similarly, data signals may be wired as one common bus, several busses or as an individual bus to each memory circuit. Of course, it should be noted that any combinations of such configurations may also be utilized. For example, the memory circuits may have one common address, control and clock bus with individual data busses. In another example, memory circuits may have one, two (or more) address, control and clock busses along with one, two (or more) data busses. In still yet another example, the memory circuits may have one address, control and clock bus together with two data busses (e.g. the number of address, control, clock and data busses may be different, etc.). In addition, the memory circuits may have one common address, control and clock bus and one common data bus. It should be noted that any other permutations and combinations of such address, control, clock and data buses may be utilized.

[0038] These configurations may therefore allow for the host system to only be in contact with a load of the buffer(s), or register(s), or AMB(s) on the memory bus. In this way, any electrical loading problems (e.g. bad signal integrity, improper signal timing, etc.) associated with the memory circuits may (but not necessarily) be prevented, in the context of various optional embodiments.

[0039] Furthermore, there may be any number of memory circuits. Just by way of example, the interface circuit(s) may be connected to 1, 2, 4, 8 or more memory circuits. In alternate embodiments, to permit data integrity storage or for other reasons, the interface circuit(s) may be connected to an odd number of memory circuits. Additionally, the memory circuits may be arranged in a single stack. Of course, however, the memory circuits may also be arranged in a plurality of stacks or in any other fashion.

[0040] In various embodiments where DRAM circuits are employed, such DRAM (e.g. DDR2 SDRAM) circuits may be composed of a plurality of portions (e.g. ranks, sub-ranks, banks, sub-banks, etc.) that may be capable of performing operations (e.g. precharge, active, read, write, refresh, etc.) in parallel (e.g. simultaneously, concurrently, overlapping, etc.). The JEDEC standards and specifications describe how DRAM (e.g. DDR2 SDRAM) circuits are composed and perform operations in response to commands. Purely as an example, a 512 Mb DDR2 SDRAM circuit that meets JEDEC specifications may be composed of four portions (e.g. banks, etc.) (each of which has 128 Mb of capacity) that are capable of performing operations in parallel in response to commands. As another example, a 2 Gb DDR2 SDRAM circuit that is compliant with JEDEC specifications may be composed of eight banks (each of which has 256 Mb of capacity). A portion (e.g. bank, etc.) of the DRAM circuit is said to be in the active state after an activate command is issued to that portion. A portion (e.g. bank, etc.) of the DRAM circuit is said to be in the precharge state after a precharge command is issued to that portion. When at least one portion (e.g. bank, etc.) of the DRAM circuit is in the active state, the entire DRAM circuit is said to be in the active state. When all portions (e.g. banks, etc.) of the DRAM circuit are in precharge state, the entire DRAM circuit is said to be in the precharge state. A relative time period spent by the entire DRAM circuit in precharge state with respect to the time period spent by the entire DRAM circuit in active state during normal operation may be defined as the precharge-to-active ratio.

[0041] DRAM circuits may also support a plurality of power management modes. Some of these modes may represent power saving modes. As an example, DDR2 SDRAMs may support four power saving modes. In particular, two active power down modes, precharge power down mode, and self-refresh mode may be supported, in one embodiment. A DRAM circuit may enter an active power down mode if the DRAM circuit is in the active state when it receives a power down command. A DRAM circuit may enter the precharge power down mode if the DRAM circuit is in the precharge state when it receives a power down command. A higher precharge-to-active ratio may increase the likelihood that a

DRAM circuit may enter the precharge power down mode rather than an active power down mode when the DRAM circuit is the target of a power saving operation. In some types of DRAM circuits, the precharge power down mode and the self refresh mode may provide greater power savings that the active power down modes.

[0042] In one embodiment, the system may be operable to perform a power management operation on at least one of the memory circuits, and optionally on the interface circuit, based on the state of the at least one memory circuit. Such a power management operation may include, among others, a power saving operation. In the context of the present description, the term power saving operation may refer to any operation that results in at least some power savings.

[0043] In one such embodiment, the power saving operation may include applying a power saving command to one or more memory circuits, and optionally to the interface circuit, based on at least one state of one or more memory circuits. Such power saving command may include, for example, initiating a power down operation applied to one or more memory circuits, and optionally to the interface circuit. Further, such state may depend on identification of the current, past or predictable future status of one or more memory circuits, a predetermined combination of commands to the one or more memory circuits, a predetermined pattern of commands to the one or more memory circuits, a predetermined absence of commands to the one or more memory circuits, any command(s) to the one or more memory circuits, and/or any command(s) to one or more memory circuits other than the one or more memory circuits. Such commands may have occurred in the past, might be occurring in the present, or may be predicted to occur in the future. Future commands may be predicted since the system (e.g. memory controller, etc.) may be aware of future accesses to the memory circuits in advance of the execution of the commands by the memory circuits. In the context of the present description, such current, past, or predictable future status may refer to any property of the memory circuit that may be monitored, stored, and/or predicted.

[0044] For example, the system may identify at least one of a plurality of memory circuits that may not be accessed for some period of time. Such status identification may involve determining whether a portion(s) (e.g. bank(s), etc.) is being accessed in at least one of the plurality of memory circuits. Of course, any other technique may be used that results in the identification of at least one of the memory circuits (or portion (s) thereof) that is not being accessed (e.g. in a non-accessed state, etc.). In other embodiments, other such states may be detected or identified and used for power management.

[0045] In response to the identification of a memory circuit that is in a non-accessed state, a power saving operation may be initiated in association with the memory circuit (or portion (s) thereof) that is in the non-accessed state. In one optional embodiment, such power saving operation may involve a power down operation (e.g. entry into an active power down mode, entry into a precharge power down mode, etc.). As an option, such power saving operation may be initiated utilizing (e.g. in response to, etc.) a power management signal including, but not limited to a clock enable (CKE) signal, chip select (CS) signal, row address strobe (RAS), column address strobe (CAS), write enable (WE), and optionally in combination with other signals and/or commands. In other embodiments, use of a non-power management signal (e.g. control signal(s), address signal(s), data signal(s), command(s), etc.) is similarly contemplated for initiating the power saving operation. Of course, however, it should be noted that anything that results in modification of the power behavior may be employed in the context of the present embodiment.

[0046] Since precharge power down mode may provide greater power savings than active power down mode, the system may, in yet another embodiment, be operable to map the physical memory circuits to appear as at least one virtual memory circuit with at least one aspect that is different from that of the physical memory circuits, resulting in a first behavior of the virtual memory circuits that is different from a second behavior of the physical memory circuits. As an option, the interface circuit may be operable to aid or participate in the mapping of the physical memory circuits such that they appear as at least one virtual memory circuit.

[0047] During use, and in accordance with one optional embodiment, the physical memory circuits may be mapped to appear as at least one virtual memory circuit with at least one aspect that is different from that of the physical memory circuits, resulting in a first behavior of the at least one virtual memory circuits that is different from a second behavior of one or more of the physical memory circuits. Such behavior may, in one embodiment, include power behavior (e.g. a power consumption, current consumption, current waveform, any other aspect of power management or behavior, etc.). Such power behavior simulation may effect or result in a reduction or other modification of average power consumption, reduction or other modification of peak power consumption or other measure of power consumption, reduction or other modification of peak current consumption or other measure of current consumption, and/or modification of other power behavior (e.g. parameters, metrics, etc.).

[0048] In one exemplary embodiment, the at least one aspect that is altered by the simulation may be the precharge-to-active ratio of the physical memory circuits. In various embodiments, the alteration of such a ratio may be fixed (e.g. constant, etc.) or may be variable (e.g. dynamic, etc.).

[0049] In one embodiment, a fixed alteration of this ratio may be accomplished by a simulation that results in physical memory circuits appearing to have fewer portions (e.g. banks, etc.) that may be capable of performing operations in parallel. Purely as an example, a physical 1 Gb DDR2 SDRAM circuit with eight physical banks may be mapped to a virtual 1 Gb DDR2 SDRAM circuit with two virtual banks, by coalescing or combining four physical banks into one virtual bank. Such a simulation may increase the precharge-to-active ratio of the virtual memory circuit since the virtual memory circuit now has fewer portions (e.g. banks, etc.) that may be in use (e.g. in an active state, etc.) at any given time. Thus, there is higher likelihood that a power saving operation targeted at such a virtual memory circuit may result in that particular virtual memory circuit entering precharge power down mode as opposed to entering an active power down mode. Again as an example, a physical 1 Gb DDR2 SDRAM circuit with eight physical banks may have a probability, g, that all eight physical banks are in the precharge state at any given time. However, when the same physical 1 Gb DDR2 SDRAM circuit is mapped to a virtual 1 Gb DDR2 SDRAM circuit with two virtual banks, the virtual DDR2 SDRAM circuit may have a probability, h, that both the virtual banks are in the precharge state at any given time. Under normal operating conditions of the system, h may be greater than g. Thus, a power saving operation directed at the aforementioned virtual 1 Gb DDR2 SDRAM circuit may have a higher likelihood of placing the

DDR2 SDRAM circuit in a precharge power down mode as compared to a similar power saving operation directed at the aforementioned physical 1 Gb DDR2 SDRAM circuit.

[0050] A virtual memory circuit with fewer portions (e.g. banks, etc.) than a physical memory circuit with equivalent capacity may not be compatible with certain industry standards (e.g. JEDEC standards). For example, the JEDEC Standard No. JESD 21-C for DDR2 SDRAM specifics a 1 Gb DRAM circuit with eight banks. Thus, a 1 Gb virtual DRAM circuit with two virtual banks may not be compliant with the JEDEC standard. So, in another embodiment, a plurality of physical memory circuits, each having a first number of physical portions (e.g. banks, etc.), may be mapped to at least one virtual memory circuit such that the at least one virtual memory circuit complies with an industry standard, and such that each physical memory circuit that is part of the at least one virtual memory circuit has a second number of portions (e.g. banks, etc.) that may be capable of performing operations in parallel, wherein the second number of portions is different from the first number of portions. As an example, four physical 1 Gb DDR2 SDRAM circuits (each with eight physical banks) may be mapped to a single virtual 4 Gb DDR2 SDRAM circuit with eight virtual banks, wherein the eight physical banks in each physical 1 Gb DDR2 SDRAM circuit have been coalesced or combined into two virtual banks. As another example, four physical 1 Gb DDR2 SDRAM circuits (each with eight physical banks) may be mapped to two virtual 2 Gb DDR2 SDRAM circuits, each with eight virtual banks, wherein the eight physical banks in each physical 1 Gb DDR2 SDRAM circuit have been coalesced or combined into four virtual banks. Strictly as an option, the interface circuit may be operable to aid the system in the mapping of the physical memory circuits.

[0051] FIG. **7** shows an example of four physical 1 Gb DDR2 SDRAM circuits **702**A-D that are mapped by the system **706**, and optionally with the aid or participation of interface circuit **704**, to appear as a virtual 4 Gb DDR2 SDRAM circuit **708**. Each physical DRAM circuit **702**A-D containing eight physical banks **720** has been mapped to two virtual banks **730** of the virtual 4 Gb DDR2 SDRAM circuit **708**.

[0052] In this example, the simulation or mapping results in the memory circuits having fewer portions (e.g. banks etc.) that may be capable of performing operations in parallel. For example, this simulation may be done by mapping (e.g. coalescing or combining) a first number of physical portion(s) (e.g. banks, etc.) into a second number of virtual portion(s). If the second number is less than the first number, a memory circuit may have fewer portions that may be in use at any given time. Thus, there may be a higher likelihood that a power saving operation targeted at such a memory circuit may result in that particular memory circuit consuming less power.

[0053] In another embodiment, a variable change in the precharge-to-active ratio may be accomplished by a simulation that results in the at least one virtual memory circuit having at least one latency that is different from that of the physical memory circuits. As an example, a physical 1 Gb DDR2 SDRAM circuit with eight banks may be mapped by the system, and optionally the interface circuit, to appear as a virtual 1 Gb DDR2 SDRAM circuit with eight virtual banks having at least one latency that is different from that of the physical DRAM circuits. The latency may include one or more timing parameters such as tFAW, tRRD, tRP, tRCD, tRFC(MIN), etc.

[0054] In the context of various embodiments, tFAW is the 4-Bank activate period; tRRD is the ACTIVE bank a to ACTIVE bank b command timing parameter; tRP is the PRECHARGE command period; tRCD is the ACTIVE-to-READ or WRITE delay; and tRFC(min) is the minimum value of the REFRESH to ACTIVE or REFRESH to REFRESH command interval.

[0055] In the context of one specific exemplary embodiment, these and other DRAM timing parameters are defined in the JEDEC specifications (for example JESD 21-C for DDR2 SDRAM and updates, corrections and errata available at the JEDEC website) as well as the DRAM manufacturer datasheets (for example the MICRON datasheet for 1 Gb: .times.4, .times.8, .times.16 DDR2 SDRAM, example part number MT47H256M4, labeled PDF: 09005aef821ae8bf/Source: 09005aef821aed36, 1 GbDDR2TOC.fm-Rev. K 9/06 EN, and available at the MICRON website).

[0056] To further illustrate, the virtual DRAM circuit may be simulated to have a tRP(virtual) that is greater than the tRP(physical) of the physical DRAM circuit. Such a simulation may thus increase the minimum latency between a precharge command and a subsequent activate command to a portion (e.g. bank, etc.) of the virtual DRAM circuit. As another example, the virtual DRAM circuit may be simulated to have a tRRD(virtual) that is greater than the tRRD(physical) of the physical DRAM circuit. Such a simulation may thus increase the minimum latency between successive activate commands to various portions (e.g. banks, etc.) of the virtual DRAM circuit. Such simulations may increase the precharge-to-active ratio of the memory circuit. Therefore, there is higher likelihood that a memory circuit may enter precharge power down mode rather than an active power down mode when it is the target of a power saving operation. The system may optionally change the values of one or more latencies of the at least one virtual memory circuit in response to present, past, or future commands to the memory circuits, the temperature of the memory circuits, etc. That is, the at least one aspect of the virtual memory circuit may be changed dynamically.

[0057] Some memory buses (e.g. DDR, DDR2, etc.) may allow the use of 1T or 2T address timing (also known as 1T or 2T address clocking). The MICRON technical note TN-47-01, DDR2 DESIGN GUIDE FOR TWO-DIMM SYSTEMS (available at the MICRON website) explains the meaning and use of 1T and 2T address timing as follows: "Further, the address bus can be clocked using 1T or 2T clocking. With 1T, a new command can be issued on every clock cycle 2T timing will hold the address and command bus valid for two clock cycles. This reduces the efficiency of the bus to one command per two clocks, but it doubles the amount of setup and hold time. The data bus remains the same for all of the variations in the address bus."

[0058] In an alternate embodiment, the system may change the precharge-to-active ratio of the virtual memory circuit by changing from 1T address timing to 2T address timing when sending addresses and control signals to the interface circuit and/or the memory circuits. Since 2T address timing affects the latency between successive commands to the memory circuits, the precharge-to-active ratio of a memory circuit may be changed. Strictly as an option, the system may dynamically change between 1T and 2T address timing.

[0059] In one embodiment, the system may communicate a first number of power management signals to the interface circuit to control the power behavior. The interface circuit

may communicate a second number of power management signals to at least a portion of the memory circuits. In various embodiments, the second number of power management signals may be the same of different from the first number of power management signals. In still another embodiment, the second number of power management signals may be utilized to perform power management of the portion(s) of the virtual or physical memory circuits in a manner that is independent from each other and/or independent from the first number of power management signals received from the system (which may or may not also be utilized in a manner that is independent from each other). In alternate embodiments, the system may provide power management signals directly to the memory circuits. In the context of the present description, such power management signal(s) may refer to any control signal (e.g. one or more address signals; one or more data signals; a combination of one or more control signals; a sequence of one or more control signals; a signal associated with an active (or active) operation, precharge operation, write operation, read operation, a mode register write operation, a mode register read operation, a refresh operation, or other encoded or direct operation, command or control signal, etc.). The operation associated with a command may consist of the command itself and optionally, one or more necessary signals and/or behavior.

[0060] In one embodiment, the power management signals received from the system may be individual signals supplied to a DIMM. The power management signals may include, for example, CKE and CS signals. These power management signals may also be used in conjunction and/or combination with each other, and optionally, with other signals and commands that are encoded using other signals (e.g. RAS, CAS, WE, address etc.) for example. The JEDEC standards may be describe how commands directed to memory circuits are to be encoded. As the number of memory circuits on a DIMM is increased, it is beneficial to increase the number of power management signals so as to increase the flexibility of the system to manage portion(s) of the memory circuits on a DIMM. In order to increase the number of power management signals from the system without increasing space and the difficulty of the motherboard routing, the power management signals may take several forms. In some of these forms, the power management signals may be encoded, located, placed, or multiplexed in various existing fields (e.g. data field, address field, etc.), signals (e.g. CKE signal, CD signal, etc.), and/or busses.

[0061] For example a signal may be a single wire; that is a single electrical point-to-point connection. In this case, the signal is un-encoded and not bussed, multiplexed, or encoded. As another example, a command directed to a memory circuit may be encoded, for example, in an address signal, by setting a predefined number of bits in a predefined location (or field) on the address bus to a specific combination that uniquely identifies that command. In this case the command is said to be encoded on the address bus and located or placed in a certain position, location, or field. In another example, multiple bits of information may be placed on multiple wires that form a bus. In yet another example, a signal that requires the transfer of two or more bits of information may be time-multiplexed onto a single wire. For example, the time-multiplexed sequence of 10 (a one followed by a zero) may be made equivalent to two individual signals: a one and a zero. Such examples of time-multiplexing are another form of encoding. Such various well-known methods of signaling, encoding (or lack thereof), bussing, and multiplexing, etc. may be used in isolation or combination.

[0062] Thus, in one embodiment, the power management signals from the system may occupy currently unused connection pins on a DIMM (unused pins may be specified by the JEDEC standards). In another embodiment, the power management signals may use existing CKE and CS pins on a DIMM, according to the JEDEC standard, along with additional CKE and CD pins to enable, for example, power management of DIMM capacities that may not yet be currently defined by the JEDEC standards.

[0063] In another embodiment the power management signals from the system may be encoded in the CKE and CS signals. Thus, for example, the CKE signal may be a bus, and the power management signals may be encoded on that bus. In one example, a 3-bit wide bus comprising three signals on three separate wires: CKE[0], CKE[1], and CKE[2], may be decoded by the interface circuit to produce eight separate CKE signals that comprise the power management signals for the memory circuits.

[0064] In yet another embodiment, the power management signals from the system may be encoded in unused portions of existing fields. Thus, for example, certain commands may have portions of the fields set to X (also known as don't care). In this case, the setting of such bit(s) to either a one or to a zero does not affect the command. The effectively unused bit position in this field may thus be used to carry a power management signal. The power management signal may thus be encoded and located or placed in a field in a bus, for example.

[0065] Further, the power management schemes described for the DRAM circuits may also be extended to the interface circuits. For example, the system may have or may infer information that a signal, bus, or other connection will not be used for a period of time. During this period of time, the system may perform power management on the interface circuit or part(s) thereof. Such power management may, for example, use an intelligent signaling mechanism (e.g. encoded signals, sideband signals, etc.) between the system and interface circuits (e.g. register chips, buffer chips, AMB chips, etc.), and/or between interface circuits. These signals may be used to power manage (e.g. power off circuits, turn off or reduce bias currents, switch off or gate clocks, reduce voltage or current, etc) part(s) of the interface circuits (e.g. input receiver circuits, internal logic circuits, clock generation circuits, output driver circuits, termination circuits, etc.)

[0066] It should thus be clear that the power management schemes described here are by way of specific examples for a particular technology, but that the methods and techniques are very general and may be applied to any memory circuit technology and any system (e.g. memory controller, etc.) to achieve control over power behavior including, for example, the realization of power consumption savings and management of current consumption behavior.

[0067] While various embodiments have been described above, it should be understood that they have been presented by way of example only, and not limitation. For example, any of the elements may employ any of the desired functionality set forth hereinabove. Hence, as an option, a plurality of memory circuits may be mapped using simulation to appear as at least one virtual memory circuit, wherein a first number of portions (e.g. banks, etc.) in each physical memory circuit may be coalesced or combined into a second number of virtual portions (e.g. banks, etc.), and the at least one virtual

memory circuit may have at least one latency that is different from the corresponding latency of the physical memory circuits. Of course, in various embodiments, the first and second number of portions may include any one or more portions. Thus, the breadth and scope of a preferred embodiment should not be limited by any of the above-described exemplary embodiments, but should be defined only in accordance with the following claims and their equivalents.

What is claimed is:

1. An apparatus for simulating at least one virtual memory circuit, the apparatus comprising:

a plurality of physical memory circuits; and

an interface circuit configured to:

communicate with the plurality of physical memory circuits;

communicate with a memory controller via a bus; and

simulate at least one virtual memory circuit for the memory controller, wherein a precharge-to-active ratio of the simulated virtual memory circuit is different from a precharge-to-active ratio of at least one physical memory circuit of the plurality of physical memory circuits, and wherein a change in a timing of the bus changes the precharge-to-active ratio of the simulated virtual memory circuit.

2. The apparatus of claim **1**, wherein the bus is an address and control bus.

3. The apparatus of claim **2**, wherein the change in the timing of the bus is a change from a first address timing to a second address timing.

4. The apparatus of claim **3**, wherein the first address timing is a 1T address timing and the second address timing is a 2T address timing.

5. The apparatus of claim **4**, wherein commands or signals on the bus are valid for one clock cycle when the 1T address timing is used.

6. The apparatus of claim **4**, wherein commands or signals on the bus are valid for two clock cycles when the 2T address timing is used.

7. The apparatus of claim **1**, wherein the interface circuit includes at least one of a buffer, a register, or an advanced memory buffer (AMB), positioned on at least one dual in-line memory module (DIMM).

8. The apparatus of claim **1**, wherein the interface circuit includes at least one of a buffer chip, a data register chip, a multiplexer/de-multiplexer chip, a synchronous multiplexer/de-multiplexer chip, a register chip, a data register chip, and an address/control register chip.

9. The apparatus of claim **1**, wherein the interface circuit changes power-related aspects of the simulated virtual memory circuit based on power management signals received from the memory controller.

10. The apparatus of claim **9**, wherein the memory controller places power management signals in at least one of an address field, a data field, at least one unused pin on a dual in-line memory module (DIMM), a clock enable signal, and a chip select signal.

11. The apparatus of claim **1**, wherein the plurality of physical memory circuits is a plurality of dynamic random access memory (DRAM) circuits in a dual in-line memory module (DIMM).

12. A method for simulating at least one virtual memory circuit, the method comprising:

interfacing a plurality of physical memory circuits and a memory controller using an interface circuit, wherein the interface circuit is configured to communicate with the memory controller via a bus; and

simulating at least one virtual memory circuit for the memory controller, wherein a precharge-to-active ratio of the simulated virtual memory circuit is different from a precharge-to-active ratio of at least one physical memory circuit of the plurality of physical memory circuits, and wherein a change in a timing of the bus changes the precharge-to-active ratio of the simulated virtual memory circuit.

13. The method of claim **12**, wherein the bus is an address and control bus.

14. The method of claim **13**, wherein the change in the timing of the bus is a change from a first address timing to a second address timing.

15. The method of claim **14**, wherein the first address timing is a 1T address timing and the second address timing is a 2T address timing.

16. The method of claim **15**, wherein commands or signals on the bus are valid for one clock cycle when the 1T address timing is used.

17. The method of claim **15**, wherein commands or signals on the bus are valid for two clock cycles when the 2T address timing is used.

18. The method of claim **12**, wherein the interface circuit includes at least one of a buffer, a register, an advanced memory buffer (AMB), and a component positioned on at least one dual in-line memory module (DIMM).

19. The method of claim **12**, wherein the interface circuit includes at least one of a buffer chip, a data register chip, a multiplexer/de-multiplexer chip, a synchronous multiplexer/de-multiplexer chip, a register chip, a data register chip, and an address/control register chip.

20. The method of claim **12**, wherein the interface circuit changes power-related aspects of the simulated virtual memory circuit based on power management signals received from the memory controller.

21. The method of claim **20**, wherein the memory controller places power management signals in at least one of an address field, a data field, at least one unused pin on a dual in-line memory module (DIMM), a clock enable signal, and a chip select signal.

22. The method of claim **12**, wherein the plurality of physical memory circuits is a plurality of dynamic random access memory (DRAM) circuits in a dual in-line memory module (DIMM).

* * * * *