2008
MURATA PRODUCTS
POWER SUPPLY REFERENCE GUIDE FOR ALTERA FPGAs

CATALOG NO. DC-03-A

MURATA PRODUCTS RoHS Compliant

muRata®

Innovator in Electronics

Please visit our website
www.murata.com

POWER SUPPLY REFERENCE GUIDE FOR ALTERA® FPGAs

Murata offers an extensive selection of DC–DC Converters, both isolated and non-isolated. This reference guide provides access to recommended non-isolated power solutions specifically for Altera FPGA devices that lead the industry in miniaturization, efficiencies, and versatility. Each power solution represented here includes reference to the appropriate Altera FPGA family, Murata DC–DC Converter part numbers (and their features) and a suggested functional drawing.

For additional information on any of Murata's DC–DC Converter solutions, please visit www.murata.com/power, or contact your local Murata sales representative. (Visit "Contact Us" at www.murata-northamerica.com for representative locations.)

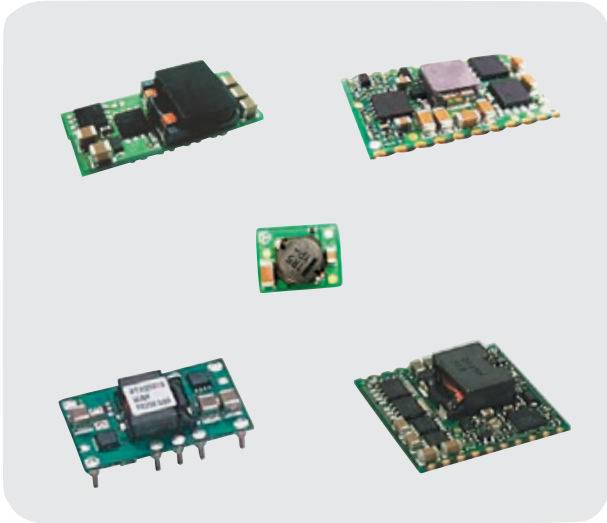

TABLE OF CONTENTS

Page

DC Voltage Specification Summary of Altera FPGAs 1

DC–DC Converter Selection Tables ..... 2 - 6

Reference Designs List 7

Cyclone™ III Solutions ..... 8 - 12

Cyclone™ II Solutions ..... 13 - 17

Stratix™ III Solutions ..... 18 - 22

Stratix™ II Solutions ..... 23 - 27

Stratix™ II GX Solutions ..... 28 - 32

Stratix™ GX Solutions ..... 33 - 37

Download data sheets for DC–DC Converters mentioned in this reference guide at www.murata.com/power/fpga/altera

Feb. 2008

muRata
Innovator in Electronics

DC Voltage Specification Summary of Altera FPGAs

MURATA PRODUCTS RoHS Compliant

This table shows the DC voltage for powering each input power rail of Altera FPGAs.
To estimate current requirement for each individual application, please refer to the Altera Power Estimators, available at **www.altera.com**.

	Cyclone™ III	Cyclone™ II	Stratix® III	Stratix® II	Stratix® II GX	Stratix® GX
V_{CCINT}	1.2V	1.2V	0.9V/1.1V (VCCL)	1.2V	1.2V	1.5V
V_{CCIO}	1.2V-3.3V	1.5V-3.3V	1.2V-3.3V	1.2V-3.3V	1.2V-3.3V	1.5V-3.3V
V_{CCPD}	–	–	2.5V-3.3V	3.3V	3.3V	–
V_{CCA}	2.5V	–	2.5V	1.2V	3.3V	3.3V
V_{CCD}	1.2V	–	1.1V	1.2V	–	–
V_{CCP}	–	–	–	–	1.2V	1.5V
V_{CCR}	–	–	–	–	1.2V	1.5V
V_{CCT}	–	–	–	–	1.2V	1.5V
V_{CCG}	–	–	–	–	–	1.5V
V_{CCL}	–	–	–	–	1.2V	–
V_{CCH}	–	–	–	–	1.2V / 1.5V	–
V_{CCPT}	–	–	2.5V	–	–	–
V_{CCPGM}	–	–	1.8V-3.3V	–	–	–
V_{CC_CLKIN}	–	–	2.5V	–	–	–
V_{CCBAT}	–	–	2.5V	–	–	–

Download data sheets for DC–DC Converters mentioned in this reference guide at www.murata.com/power/fpga/altera

Petitioners
Ex. 1043, p. 1

MURATA PRODUCTS RoHS Compliant

Selection Table for Cyclone™ III FPGAs

Table 1. Cyclone™ III Device Selection Table

Altera				muRata Solutions (Vout/Iout)	
Device	Type	Voltage	Current	Vin=3.3V or 5V	Vin=12V
EP3C5 EP3C10 EP3C16 EP3C25 EP3C40 EP3C55 EP3C80 EP3C120	V_{CCINT}	1.2V	To determine current consumption, please use Altera's PowerPlay Power Estimation Tools, available at http://www.altera.com/support/devices/estimator/pow-powerplay/jsp.	MPD4S014S (Vo1=1-3.3V/1.3A, Vo2=1 8-3.6V/1A,Vo3=2.5V/0.3A) MPD5S025S (Vo1=1-3.3V/1.6A, Vo2=1 8-3.6V/1.6A,Vo3=2 5V/0.3A) MPD6S022S(1.1-3.6V/3A) MPDTY102S(0.8-5V/2A) MPDTY201S(0.8-2.5V/3A) MPDTY301S(0.8-3.3V/7A) MPDTY302S(0.8-2.5V/7A) MPDTY411S(0.8-3.6V/7A) MPDTY412S(0.8-2.5V/7A) MPDTH03050WAS(0.8-2.5V/6A) MPDTH05050WAS(0.8-3.6V/6A)	MPD4S014S (Vo1=1-3.3V/1.3A, Vo2=1.8-3.6V/1A,Vo3=2.5V/0.3A) MPDTY303S(0.8-5.5V/8A) MPDTH12050WAS(1.2-5.5V/6A)
	V_{CCIO}	1.5V-3.3V			
	V_{CCA}	2.5V			
	V_{CCD}	1.2V			

Selection Table for Cyclone™ II FPGAs

Table 2. Cyclone™ II Device Selection Table

Altera				muRata Solutions (Vout/Iout)	
Device	Type	Voltage	Current	Vin=3.3V or 5V	Vin=12V
EP2C5 EP2C8 EP2C15 EP2C20 EP2C35 EP2C50 EP2C70	V_{CCINT}	1.2V	To determine current consumption, please use Altera's PowerPlay Power Estimation Tools, available at http://www.altera.com/support/devices/estimator/pow-powerplay/jsp.	MPD4S014S (Vo1=1-3.3V/1.3A, Vo2=1 8-3.6V/1A,Vo3=2.5V/0.3A) MPD5S025S (Vo1=1-3.3V/1.6A, Vo2=1 8-3.6V/1.6A,Vo3=2 5V/0.3A) MPD6S022S(1.1-3.6V/3A) MPDTY102S(0.8-5V/2A) MPDTY201S(0.8-2.5V/3A) MPDTY301S(0.8-3.3V/7A) MPDTY302S(0.8-2.5V/7A) MPDTY411S(0.8-3.6V/7A) MPDTY412S(0.8-2.5V/7A) MPDTH03050WAS(0.8-2.5V/6A) MPDTH05050WAS(0.8-3.6V/6A)	MPD4S014S (Vo1=1-3.3V/1.3A, Vo2=1.8-3.6V/1A,Vo3=2.5V/0.3A) MPDTY303S(0.8-5.5V/8A) MPDTH12050WAS(1.2-5.5V/6A)
	V_{CCIO}	1.5V-3.3V			

Download data sheets for DC–DC Converters mentioned in this reference guide at www.murata.com/power/fpga/altera

Petitioners
Ex. 1043, p. 2

MURATA PRODUCTS RoHS Compliant

Selection Table for Stratix® III FPGAs

Table 3. Stratix® III Device Selection Table

Altera				muRata Solutions (Vout/Iout)	
Device	**Type**	**Voltage**	**Current**	**Vin=3.3V or 5V**	**Vin=12V**
EP3SL50 EP3SL70 EP3SL110 EP3SL150 EP3SL200 EP3SL340 EP3SE50 EP3SE80 EP3SE110 EP3SE260	VCCL (V_{CCINT})	0.9V/1.1V	To determine current consumption, please use Altera's PowerPlay Power Estimation Tools, which is available at http://www.altera.com/support/devices/es imator/pow-powerplay/jsp.	MPD6S022S(1.1-3.6V/3A) MPDTY201S(0.8-2.5V/3A) MPDTY301S(0.8-3.3V/7A) MPDTY302S(0.8-2.5V/7A) MPDTY311S(0.8-3.3V/16A) MPDTY312S(0.8-2.5V/16A) MPDTY402S(0.75-5.5V/16A) MPDTY411S(0.8-3.6V/7A) MPDTY412S(0.8-2.5V/7A) MPDTH03050WAS(0.8-2.5V/6A) MPDTH05050WAS(0.8-3.6V/6A) MPDTH03060WAS(0.8-2.5V/10A) MPDTH05060WAS(0.8-3.6V/10A) MPDTH03010WAS(0.8-2.5V/15A) MPDTH05010WAS(0.8-3.6V/15A) MPDTH03020WAS(0.8-2.5V/22A) MPDTH05020WAS(0.8-3.6V/22A)	MPDTY303S(0.8-5.5V/8A) MPDTH12050WAS(1.2-5.5V/6A) MPDTH12060WAS(1.2-5.5V/10A) MPDTH12010WAS(1.2-5.5V/12A) MPDTH12020WAS(1.2-5.5V/18A)
	with Large Load Transient Current	0.9V/1.1V		MPDRX002S(0.8-1.8V/16A) MPDRX312S(0.8-1.8V/16A)	MPDRX004S(0.8-1.8V/12A) MPDRX103S(0.8-1.8V/16A) MPDRX104S(1.5-3.3V/12A) MPDRX301S(0.8-1.65V/13A) MPDRX302S(1.6-3.63V/13A) MPDRX303S(0.8-1.65V/26A) MPDRX304S(1.6-3.63V/26A)
	V_{CCIO}	1.2V-3.3V		MPD6S022S(1.1-3.6V/3A) MPDTY201S(0.8-2.5V/3A) MPDTY301S(0.8-3.3V/7A) MPDTY302S(0.8-2.5V/7A) MPDTY311S(0.8-3.3V/16A) MPDTY312S(0.8-2.5V/16A) MPDTY402S(0.8-5.5V/16A) MPDTY411S(0.8-3.6V/7A) MPDTY412S(0.8-2.5V/7A) MPDTH03050WAS(0.8-2.5V/6A) MPDTH05050WAS(0.8-3.6V/6A) MPDTH03060WAS(0.8-2.5V/10A) MPDTH05060WAS(0.8-3.6V/10A) MPDTH03010WAS(0.8-2.5V/15A) MPDTH05010WAS(0.8-3.6V/15A) MPDTH03020WAS(0.8-2.5V/22A) MPDTH05020WAS(0.8-3.6V/22A)	MPDTY303S(0.8-5.5V/8A) MPDTH12050WAS(1.2-5.5V/6A) MPDTH12060WAS(1.2-5.5V/10A) MPDTH12010WAS(1.2-5.5V/12A) MPDTH12020WAS(1.2-5.5V/18A)
	with Large Load Transient Current	1.2V-3.3V		MPDRX002S(0.8-1.8V/16A) MPDRX312S(0.8-1.8V/16A)	MPDRX004S(0.8-1.8V/12A) MPDRX103S(0.8-1.8V/16A) MPDRX104S(1.5-3.3V/12A) MPDRX301S(0.8-1.65V/13A) MPDRX302S(1.6-3.63V/13A) MPDRX303S(0.8-1.65V/26A) MPDRX304S(1.6-3.63V/26A)

Download data sheets for DC–DC Converters mentioned in this reference guide at www.murata.com/power/fpga/altera

MURATA PRODUCTS RoHS Compliant

Selection Table for Stratix® II FPGAs

Table 4. Stratix® II Device Selection Table

Altera				muRata Solutions (Vout/Iout)	
Device	Type	Voltage	Current	Vin=3.3V or 5V	Vin=12V
EP2S15 EP2S30 EP2S60 EP2S90 EP2S130 EP2S180	$V_{CC\ NT}$	1.2V	To determine current consumption, please use Altera's PowerPlay Power Es imation Tools, available at http://www.altera.com/support/devices/estimator/pow-powerplay/jsp.	MPD6S022S(1.1-3.6V/3A) MPDTY201S(0.8-2.5V/3A) MPDTY301S(0.8-3.3V/7A) MPDTY302S(0.8-2.5V/7A) MPDTY311S(0.8-3.3V/16A) MPDTY312S(0.8-2.5V/16A) MPDTY402S(0.75-5.5V/16A) MPDTY411S(0.8-3.6V/7A) MPDTY412S(0.8-2.5V/7A) MPDTH03050WAS(0.8-2.5V/6A) MPDTH05050WAS(0.8-3.6V/6A) MPDTH03060WAS(0.8-2.5V/10A) MPDTH05060WAS(0.8-3.6V/10A) MPDTH03010WAS(0.8-2.5V/15A) MPDTH05010WAS(0.8-3.6V/15A) MPDTH03020WAS(0.8-2.5V/22A) MPDTH05020WAS(0.8-3.6V/22A)	MPDTY303S(0.8-5.5V/8A) MPDTH12050WAS(1.2-5.5V/6A) MPDTH12060WAS(1.2-5.5V/10A) MPDTH12010WAS(1.2-5.5V/12A) MPDTH12020WAS(1.2-5.5V/18A)
	with Large Load Transient Current	1.2V		MPDRX002S(0.8-1.8V/16A) MPDRX312S(0.8-1.8V/16A)	MPDRX004S(0.8-1.8V/12A) MPDRX103S(0.8-1.8V/16A) MPDRX104S(1.5-3.3V/12A) MPDRX301S(0.8-1.65V/13A) MPDRX302S(1.6-3.63V/13A) MPDRX303S(0.8-1.65V/26A) MPDRX304S(1.6-3.63V/26A)
	V_{CCIO}	1.2V-3.3V		MPD6S022S(1.1-3.6V/3A) MPDTy201S(0.8-2.5V/3A) MPDTY301S(0.8-3.3V/7A) MPDTY302S(0.8-2.5V/7A) MPDTY311S(0.8-3.3V/16A) MPDTY312S(0.8-2.5V/16A) MPDTY402S(0.75-5.5V/16A) MPDTY411S(0.8-3.6V/7A) MPDTY412S(0.8-2.5V/7A) MPDTH03050WAS(0.8-2.5V/6A) MPDTH05050WAS(0.8-3.6V/6A) MPDTH03060WAS(0.8-2.5V/10A) MPDTH05060WAS(0.8-3.6V/10A) MPDTH03010WAS(0.8-2.5V/15A) MPDTH05010WAS(0.8-3.6V/15A) MPDTH03020WAS(0.8-2.5V/22A) MPDTH05020WAS(0.8-3.6V/22A)	MPDTY303S(0.8-5.5V/8A) MPDTH12050WAS(1.2-5.5V/6A) MPDTH12060WAS(1.2-5.5V/10A) MPDTH12010WAS(1.2-5.5V/12A) MPDTH12020WAS(1.2-5.5V/18A)
	with Large Load Transient Current	1.2V-3.3V		MPDRX002S(0.8-1.8V/16A) MPDRX312S(0.8-1.8V/16A)	MPDRX004S(0.8-1.8V/12A) MPDRX103S(0.8-1.8V/16A) MPDRX104S(1.5-3.3V/12A) MPDRX301S(0.8-1.65V/13A) MPDRX302S(1.6-3.63V/13A) MPDRX303S(0.8-1.65V/26A) MPDRX304S(1.6-3.63V/26A)

Download data sheets for DC–DC Converters mentioned in this reference guide at www.murata.com/power/fpga/altera

MURATA PRODUCTS RoHS Compliant

Selection Table for Stratix® II GX FPGAs

Table 5. Stratix® II GX Device Selection Table

Altera				muRata Solutions (Vout/Iout)	
Device	Type	Voltage	Current	Vin=3.3V or 5V	Vin=12V
EP2SGX30C EP2SGX30D EP2SGX60C EP2SGX60D EP2SGX60E EP2SGX90E EP2SGX90F EP2SGX130G	V_{CCINT}	1.2V	To determine current consumption, please use Altera's PowerPlay Power Es imation Tools, available at http://www.altera.com/support/devices/estimator/pow-powerplay/jsp.	MPD6S022S(1.1-3.6V/3A) MPDTY201S(0.8-2.5V/3A) MPDTY301S(0.8-3.3V/7A) MPDTY302S(0.8-2.5V/7A) MPDTY311S(0.8-3.3V/16A) MPDTY312S(0.8-2.5V/16A) MPDTY402S(0.75-5.5V/16A) MPDTY411S(0.8-3.6V/7A) MPDTY412S(0.8-2.5V/7A) MPDTH03050WAS(0.8-2.5V/6A) MPDTH05050WAS(0.8-3.6V/6A) MPDTH03060WAS(0.8-2.5V/10A) MPDTH05060WAS(0.8-3.6V/10A) MPDTH03010WAS(0.8-2.5V/15A) MPDTH05010WAS(0.8-3.6V/15A) MPDTH03020WAS(0.8-2.5V/22A) MPDTH05020WAS(0.8-3.6V/22A)	MPDTY303S(0.8-5.5V/8A) MPDTH12050WAS(1.2-5.5V/6A) MPDTH12060WAS(1.2-5.5V/10A) MPDTH12010WAS(1.2-5.5V/12A) MPDTH12020WAS(1.2-5.5V/18A)
	with Large Load Transient Current	1.2V		MPDRX002S(0.8-1.8V/16A) MPDRX312S(0.8-1.8V/16A)	MPDRX004S(0.8-1.8V/12A) MPDRX103S(0.8-1.8V/16A) MPDRX104S(1.5-3.3V/12A) MPDRX301S(0.8-1.65V/13A) MPDRX302S(1.6-3.63V/13A) MPDRX303S(0.8-1.65V/26A) MPDRX304S(1.6-3.63V/26A)
	V_{CCIO}	1.2V-3.3V		MPD6S022S(1.1-3.6V/3A) MPDTY201S(0.8-2.5V/3A) MPDTY301S(0.8-3.3V/7A) MPDTY302S(0.8-2.5V/7A) MPDTY311S(0.8-3.3V/16A) MPDTY312S(0.8-2.5V/16A) MPDTY402S(0.75-5.5V/16A) MPDTY411S(0.8-3.6V/7A) MPDTY412S(0.8-2.5V/7A) MPDTH03050WAS(0.8-2.5V/6A) MPDTH05050WAS(0.8-3.6V/6A) MPDTH03060WAS(0.8-2.5V/10A) MPDTH05060WAS(0.8-3.6V/10A) MPDTH03010WAS(0.8-2.5V/15A) MPDTH05010WAS(0.8-3.6V/15A) MPDTH03020WAS(0.8-2.5V/22A) MPDTH05020WAS(0.8-3.6V/22A)	MPDTY303S(0.8-5.5V/8A) MPDTH12050WAS(1.2-5.5V/6A) MPDTH12060WAS(1.2-5.5V/10A) MPDTH12010WAS(1.2-5.5V/12A) MPDTH12020WAS(1.2-5.5V/18A)
	with Large Load Transient Current	1.2V-3.3V		MPDRX002S(0.8-1.8V/16A) MPDRX312S(0.8-1.8V/16A)	MPDRX004S(0.8-1.8V/12A) MPDRX103S(0.8-1.8V/16A) MPDRX104S(1.5-3.3V/12A) MPDRX301S(0.8-1.65V/13A) MPDRX302S(1.6-3.63V/13A) MPDRX303S(0.8-1.65V/26A) MPDRX304S(1.6-3.63V/26A)

Download data sheets for DC–DC Converters mentioned in this reference guide at www.murata.com/power/fpga/altera

MURATA PRODUCTS RoHS Compliant

Selection Table for Stratix® GX FPGAs

Table 6. Stratix® GX Device Selection Table

Altera				muRata Solutions (Vout/Iout)	
Device	Type	Voltage	Current	Vin=3.3V or 5V	Vin=12V
EP1SGX10C EP1SGX10D EP1SGX25C EP1SGX25D EP1SGX25F EP1SGX40D EP1SGX40G	V_{CCINT}	1.5V	To determine current consumption, please use Altera's PowerPlay Power Estimation Tools, available at http://www.altera.com/support/devices/estimator/pow-powerplay/jsp.	MPD6S022S(1.1-3.6V/3A) MPDTY201S(0.8-2.5V/3A) MPDTY301S(0.8-3.3V/7A) MPDTY302S(0.8-2.5V/7A) MPDTY311S(0.8-3.3V/16A) MPDTY312S(0.8-2.5V/16A) MPDTY402S(0.75-5.5V/16A) MPDTY411S(0.8-3.6V/7A) MPDTY412S(0.8-2.5V/7A) MPDTH03050WAS(0.8-2.5V/6A) MPDTH05050WAS(0.8-3.6V/6A) MPDTH03060WAS(0.8-2.5V/10A) MPDTH05060WAS(0.8-3.6V/10A) MPDTH03010WAS(0.8-2.5V/15A) MPDTH05010WAS(0.8-3.6V/15A) MPDTH03020WAS(0.8-2.5V/22A) MPDTH05020WAS(0.8-3.6V/22A)	MPDTY303S(0.8-5.5V/8A) MPDTH12050WAS(1.2-5.5V/6A) MPDTH12060WAS(1.2-5.5V/10A) MPDTH12010WAS(1.2-5.5V/12A) MPDTH12020WAS(1.2-5.5V/18A)
	with Large Load Transient Current	1.5V		MPDRX002S(0.8-1.8V/16A) MPDRX312S(0.8-1.8V/16A)	MPDRX004S(0.8-1.8V/12A) MPDRX103S(0.8-1.8V/16A) MPDRX104S(1.5-3.3V/12A) MPDRX301S(0.8-1.65V/13A) MPDRX302S(1.6-3.63V/13A) MPDRX303S(0.8-1.65V/26A) MPDRX304S(1.6-3.63V/26A)
	V_{CCIO}	1.5V-3.3V		MPD6S022S(1.1-3.6V/3A) MPDTY201S(0.8-2.5V/3A) MPDTY301S(0.8-3.3V/7A) MPDTY302S(0.8-2.5V/7A) MPDTY311S(0.8-3.3V/16A) MPDTY312S(0.8-2.5V/16A) MPDTY402S(0.75-5.5V/16A) MPDTY411S(0.8-3.6V/7A) MPDTY412S(0.8-2.5V/7A) MPDTH03050WAS(0.8-2.5V/6A) MPDTH05050WAS(0.8-3.6V/6A) MPDTH03060WAS(0.8-2.5V/10A) MPDTH05060WAS(0.8-3.6V/10A) MPDTH03010WAS(0.8-2.5V/15A) MPDTH05010WAS(0.8-3.6V/15A) MPDTH03020WAS(0.8-2.5V/22A) MPDTH05020WAS(0.8-3.6V/22A)	MPDTY303S(0.8-5.5V/8A) MPDTH12050WAS(1.2-5.5V/6A) MPDTH12060WAS(1.2-5.5V/10A) MPDTH12010WAS(1.2-5.5V/12A) MPDTH12020WAS(1.2-5.5V/18A)
	with Large Load Transient Current	1.5V-3.3V		MPDRX002S(0.8-1.8V/16A) MPDRX312S(0.8-1.8V/16A)	MPDRX004S(0.8-1.8V/12A) MPDRX103S(0.8-1.8V/16A) MPDRX104S(1.5-3.3V/12A) MPDRX301S(0.8-1.65V/13A) MPDRX302S(1.6-3.63V/13A) MPDRX303S(0.8-1.65V/26A) MPDRX304S(1.6-3.63V/26A

Download data sheets for DC–DC Converters mentioned in this reference guide at www.murata.com/power/fpga/altera

Power Supply Reference Design List

MURATA PRODUCTS RoHS Compliant

Table 1. Cyclone™ III FPGA Reference Design

#Design	1.2V	3.3V	Description	Page
1	1.3A	1A	4.5-13.2Vinput, Triple Output MPD4S014S	8
2	1.6A	1.6A	5Vinput, Triple Output MPD5S025S	9
3	3A	3A	3-5.5Vinput, MPD6S022S(×2)	10
4	3A	3A	3-5.5Vinput, MPDTY201S(×2)	11
5	8A	8A	6.5-14Vinput, MPDTY303S(×2)	12

Table 2. Cyclone™ II FPGA Reference Design

#Design	1.2V	3.3V	Description	Page
1	1.3A	1A	4.5-13.2Vinput, Triple Output MPD4S014S	13
2	1.6A	1.6A	5Vinput, Triple Output MPD5S025S	14
3	3A	-	3.3Vinput, MPD6S022S	15
4	6A	6A	12Vinput, MPDTH12050WAS(×2)	16
5	7A	7A	5Vinput, MPDTY411S(×2)	17

Table 3. Stratix® III FPGA Reference Design

#Design	0.9V/1.1V	3.3V	Description	Page
1	8A	8A	6.5-14Vinput, MPDTY303(×3)	18
2	12A	8A	7-14Vinput, MPDRX004S+MPDTY303S	19
3	16A	16A	3-5.5Vinput, MPDRX002S+MPDTY402S	20
4	16A	16A	5input, MPDRX312S+MPDTY311S	21
5	26A	26A	5.6-14Vinput, MPDRX303S+MPDRX304S	22

Table 4. Stratix® II FPGA Reference Design

#Design	1.2V	3.3V	Description	Page
1	8A	8A	6.5-14Vinput, MPDTY303(×3)	23
2	12A	8A	7-14Vinput, MPDRX004S+MPDTY303S	24
3	16A	16A	5Vinput, MPDRX002S+MPDTY311S	25
4	18A	18A	12Vinput, MPDTH12020WAS(×2)	26
5	6A	6A	12Vinput, MPDTH12050WAS(×2)	27

Table 5. Stratix® II GX FPGA Reference Design

#Design	1.2V	3.3V	Description	Page
1	8A	8A	6.5-14Vinput, MPDTY303(×3)	28
2	12A	8A	7-14Vinput, MPDRX004S+MPDTY303S	29
3	16A	16A	5Vinput, MPDRX002S+MPDTY311S	30
4	18A	18A	12Vinput, MPDTH12020WAS(×2)	31
5	6A	6A	12Vinput, MPDTH12050WAS(×2)	32

Table 6. Stratix® GX FPGA Reference Design

#Design	1.5V	3.3V	Description	Page
1	8A	8A	6.5-14Vinput, MPDTY303(×3)	33
2	12A	8A	7-14Vinput, MPDRX004S+MPDTY303S	34
3	16A	16A	5Vinput, MPDRX002S+MPDTY311S	35
4	18A	18A	12Vinput, MPDTH12020WAS(×2)	36
5	6A	6A	12Vinput, MPDTH12050WAS(×2)	37

Note:

(1) The current values in these tables indicate the power supply current rating. The FPGA alone does not necessarily require these supply current levels.

(2) In this reference guide, we show capacitors only for stable DC-DC Converter operation. For FPGA decoupling please refer to Altera's documentation on frequency-domain target impedance methods.

Download data sheets for DC–DC Converters mentioned in this reference guide at www.murata.com/power/fpga/altera

Petitioners
Ex. 1043, p. 7

Cyclone™ III FPGA Design 1
4.5 - 13.2V Input, 1.3A 3-Output Solution

MURATA PRODUCTS RoHS Compliant

[Features]

- 3-Output configuration of the MPD4S014S makes it simple to use.
- Wide Input Voltage Range
- SIP configuration saves PCB space.
- Adjustable Start-up Sequence via On/Off Control Pins.
- Trimmable Output Voltages (Vout1 & Vout2)

[Schematic]

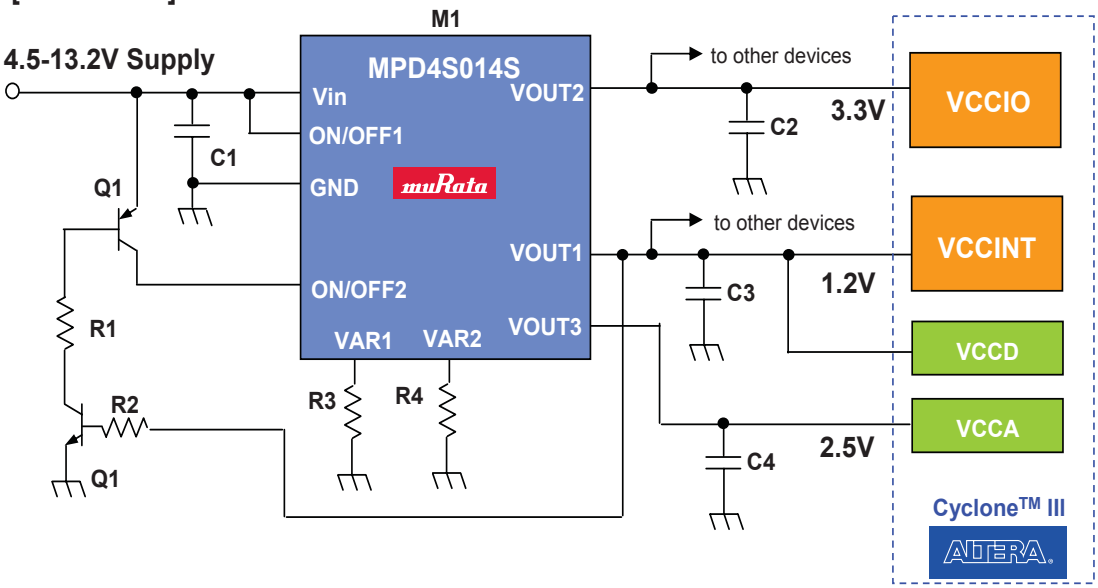

[Bill of Materials]

Reference	Qty	Description	Manufacturer	Part Number
M1	1	1.3A/1.0A/0.3A-out DC-DC converter, Triple Ouptut, SIP	Murata	MPD4S014S
C1,C2,C3,C4	3	Ceramic, 1uF, 16V, B, 10%	Murata	GRM188B31C105KA92
Q1	1	Dual, 50V, 100mA	Panasonic	XP04601
R1,R2	2	47 kΩ, 1/16W, 5%	Std	Std
R3	1	2285Ω, 1/16W, 0.5%	Std	Std
R4	1	1.8kΩ, 1/16W, 0.5%	Std	Std

Download data sheets for DC–DC Converters mentioned in this reference guide at www.murata.com/power/fpga/altera

Petitioners
Ex. 1043, p. 8

Cyclone™ III FPGA Design 2
5V Input, 1.6A 3-Output Solution

MURATA PRODUCTS RoHS Compliant

[Features]

- 3-Output configuration of the MPD5S025S makes it simple to use.
- SIP configuration saves PCB space.
- Adjustable Start-up Sequence via On/Off Control Pins.
- Trimmable Output Voltages (Vout1 & Vout2)

[Schematic]

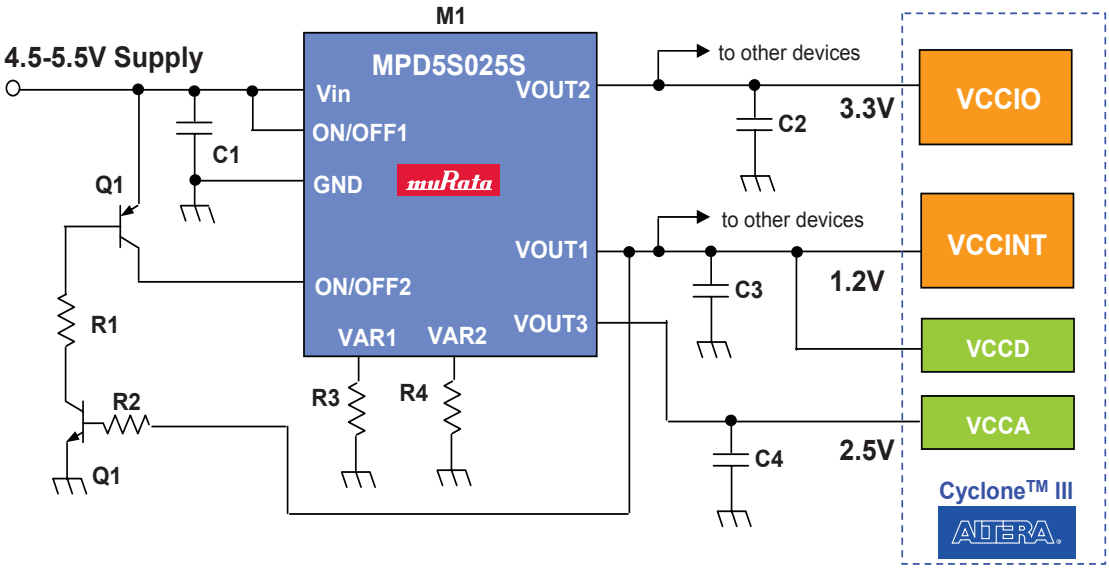

[Bill of Materials]

Reference	Qty	Description	Manufacturer	Part Number
M1	1	1.6A/1.6A/0.3A-out DC-DC converter, Triple Output, SIP	Murata	MPD5S025S
C1,C2,C3,C4	3	Ceramic, 1uF, 16V, B, 10%	Murata	GRM188B31C105KA92
Q1	1	Dual, 50V, 100mA	Panasonic	XP04601
R1,R2	2	47 kΩ, 1/16W, 5%	Std	Std
R3	1	2285Ω, 1/16W, 0.5%	Std	Std
R4	1	1.8kΩ, 1/16W, 0.5%	Std	Std

Download data sheets for DC–DC Converters mentioned in this reference guide at www.murata.com/power/fpga/altera

Petitioners
Ex. 1043, p. 9

Cyclone™ III FPGA Design 3
3-5.5V Input, 3A Low Cost Solution

MURATA PRODUCTS RoHS Compliant

[Features]

- SIP configuration saves PCB space.
- Adjustable Start-up Sequence via On/Off Control Pins.
- Wide input voltage range of MPD6S012S is from 3.0V to 5.5V.
- Trimmable Output Voltage (1.1V to 3.6V)

[Schematic]

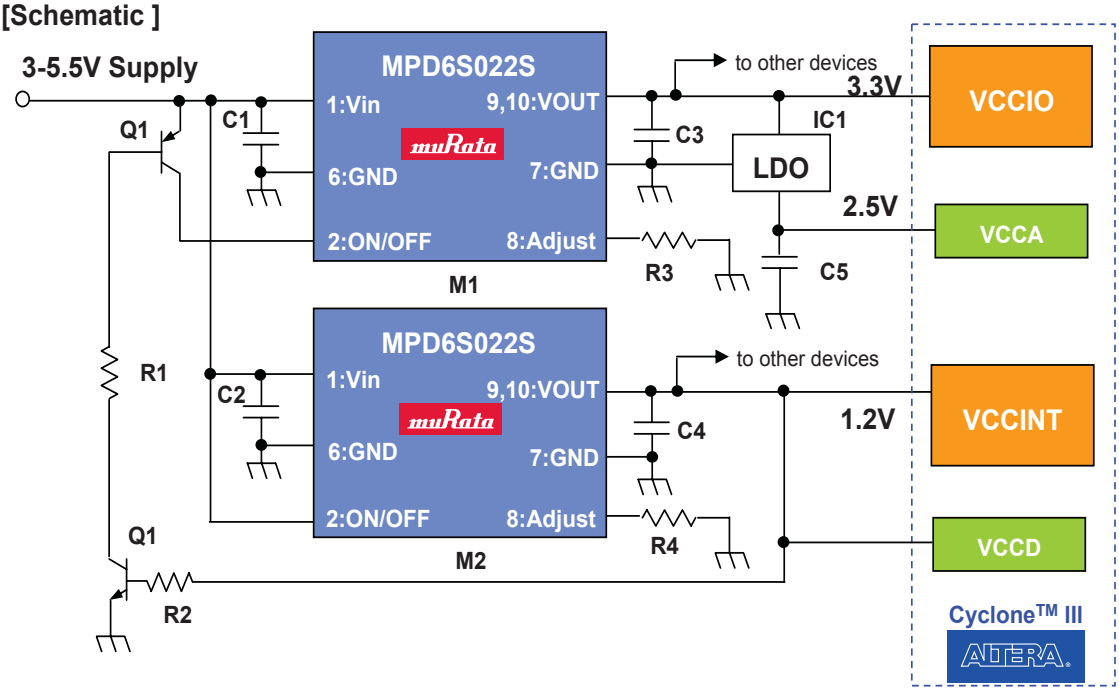

[Bill of Materials]

Reference	Qty	Description	Manufacturer	Part Number
M1,M2	2	3A-out DC-DC converter, SIP	Murata	MPD6S012S
C1,C2,C3,C4	4	Ceramic, 0.1μ F, 50V, R, 10%	Murata	GRM188R11H104KA93
C5	1	Tantalum, 1μ F, 10V	Std	Std
IC1	1	2.5V LDO, 400mA-out	Torex	XC6203P252FR
Q1	1	Dual, 50V, 100mA	Panasonic	XP04601
R1,R2	2	47 kΩ, 1/16W, 5%	Std	Std
R3	1	131.4kΩ, 1/16W, 0.5%	Std	Std
R4	1	747Ω, 1/16W, 0.5%	Std	Std

Download data sheets for DC–DC Converters mentioned in this reference guide at www.murata.com/power/fpga/altera

Petitioners
Ex. 1043, p. 10

Cyclone™ III FPGA Design 4
3-5.5V Input, 3A Ultra Small Solution

MURATA PRODUCTS RoHS Compliant

[Features]

- Super Small (93mm^2), Cost-Efficient; MPDTY201S (M1,M2).
- Adjustable Start-up Sequence via On/Off Control Pins.
- Wide input voltage range of MPDTY201S is from 3.0V to 5.5V.
- Trimmable Output Voltage (0.8V to 2.5V)

[Schematic]

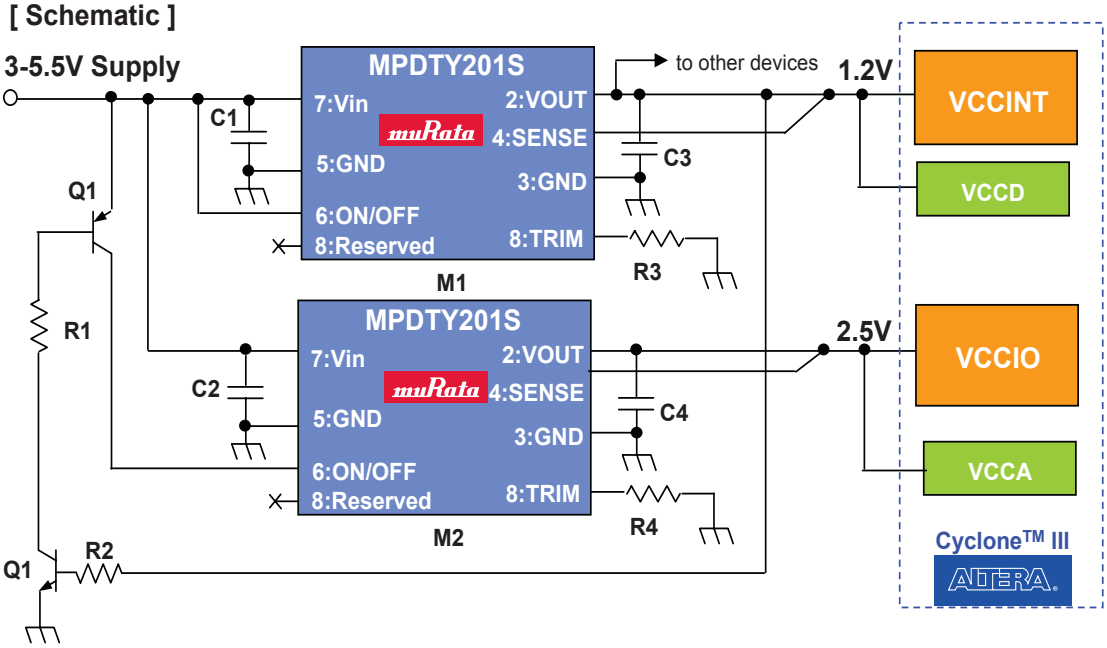

[Bill of Materials]

Reference	Qty	Description	Manufacturer	Part Number
M1,M2	2	3A-out DC-DC converter, SMD	Murata	MPDTY201S
C1,C2	2	Ceramic, 47uF, 6.3V, X5R, 20%	Murata	GRM31CR60J476ME19
C3,C4	2	Ceramic, 1uF, 16V, X5R, 10%	Murata	GRM188R61C105KA93
Q1	1	Dual, 50V,100mA	Panasonic	XP04601
R1,R2	2	47kΩ,1/16W,5%	Std	Std
R3	1	1.7kΩ, 1/16W, 0.5%	Std	Std
R4	1	170.6Ω, 1/16W, 0.5%	Std	Std

Download data sheets for DC–DC Converters mentioned in this reference guide at www.murata.com/power/fpga/altera

Petitioners
Ex. 1043, p. 11

Cyclone™ III FPGA Design 5
6.5-14V Input, 8A Solution

MURATA PRODUCTS RoHS Compliant

[Features]

- Low Profile (H<4.2mm), High Efficiency MPDTY303S.
- Adjustable Start-up Sequence via On/Off Control Pins.

[Schematic]

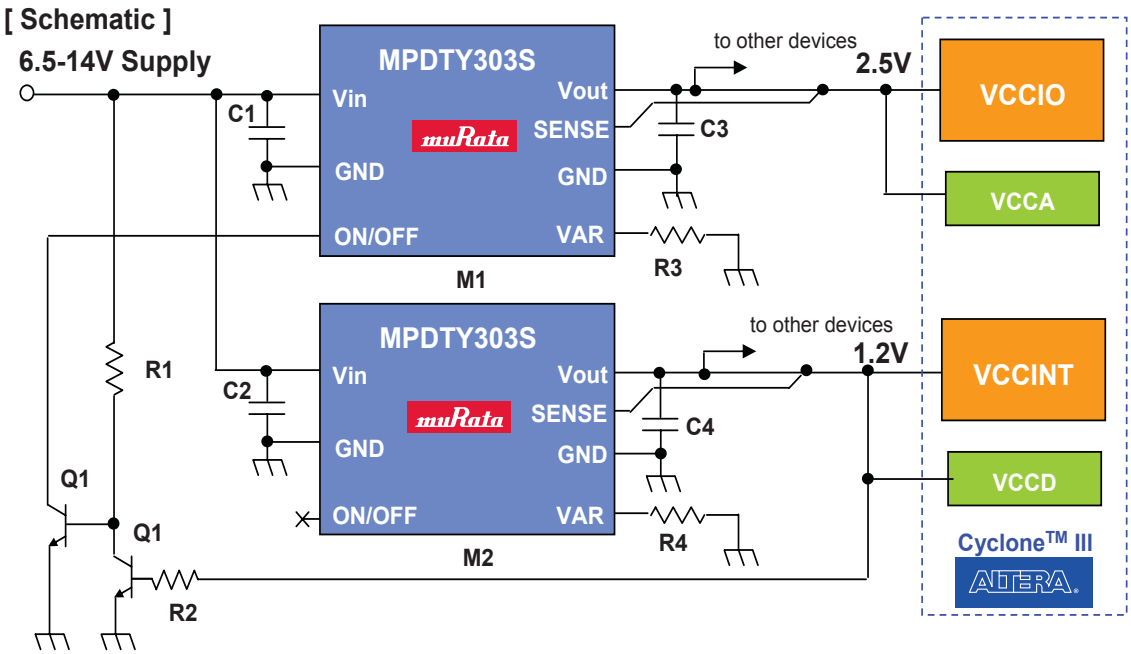

[List of Material]

Reference	Qty	Description	Manufacturer	Part Number
M1,M2	2	8A-out DC-DC converter, SMT	Murata	MPDTY303S
C1,C2	2	Ceramic, 22uF, 16V, B, 10%	Murata	GRM32EB31C226KE16
C3,C4	2	Ceramic, 47uF, 6.3V, B, 20%	Murata	GRM31CB30J476ME18
Q1	1	Dual, 50V, 100mA	Panasonic	XP06501
R1,R2	2	47 kΩ, 1/16W, 5%	Std	Std
R3	1	4.01kΩ, 1/16W, 0.5%	Std	Std
R4	1	45.35kΩ, 1/16W, 0.5%	Std	Std

Download data sheets for DC–DC Converters mentioned in this reference guide at www.murata.com/power/fpga/altera

Petitioners
Ex. 1043, p. 12

Cyclone™ II FPGA Design 1
4.5-13.2V Input, 1.3A 3-Output Solution

MURATA PRODUCTS RoHS Compliant

[Features]

- 3-Output configuration of the MPD4S014S makes it simple to use.
- Wide Input Voltage Range
- SIP configuration saves PCB space.
- Adjustable Start-up Sequence via On/Off Control Pins.
- Trimmable Output Voltages (Vout1 & Vout2)

[Schematic]

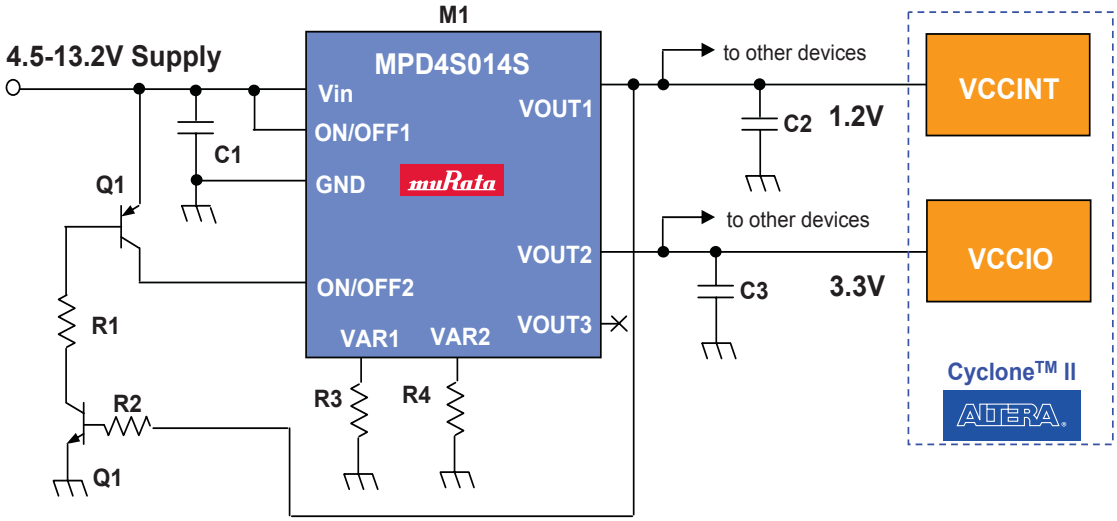

[Bill of Materials]

Reference	Qty	Description	Manufacturer	Part Number
M1	1	1.3A/1.0A/0.3A-out DC-DC converter, Triple, SIP	Murata	MPD4S014S
C1,C2,C3	3	Ceramic, 1uF, 16V, B, 10%	Murata	GRM188B31C105KA92
Q1	1	Dual, 50V, 100mA	Panasonic	XP04601
R1,R2	2	47 kΩ, 1/16W, 5%	Std	Std
R3	1	2285Ω, 1/16W, 0.5%	Std	Std
R4	1	1.8kΩ, 1/16W, 0.5%	Std	Std

Download data sheets for DC–DC Converters mentioned in this reference guide at www.murata.com/power/fpga/altera

Petitioners
Ex. 1043, p. 13

Cyclone™ II FPGA Design 2
5V Input, 1.6A 3-Output Solution

MURATA PRODUCTS RoHS Compliant

[Features]

- 3-Output configuration of the MPD5S025S makes it simple to use.
- SIP configuration saves PCB space.
- Adjustable Start-up Sequence via On/Off Control Pins.
- Trimmable Output Voltages (Vout1 & Vout2)

[Schematic]

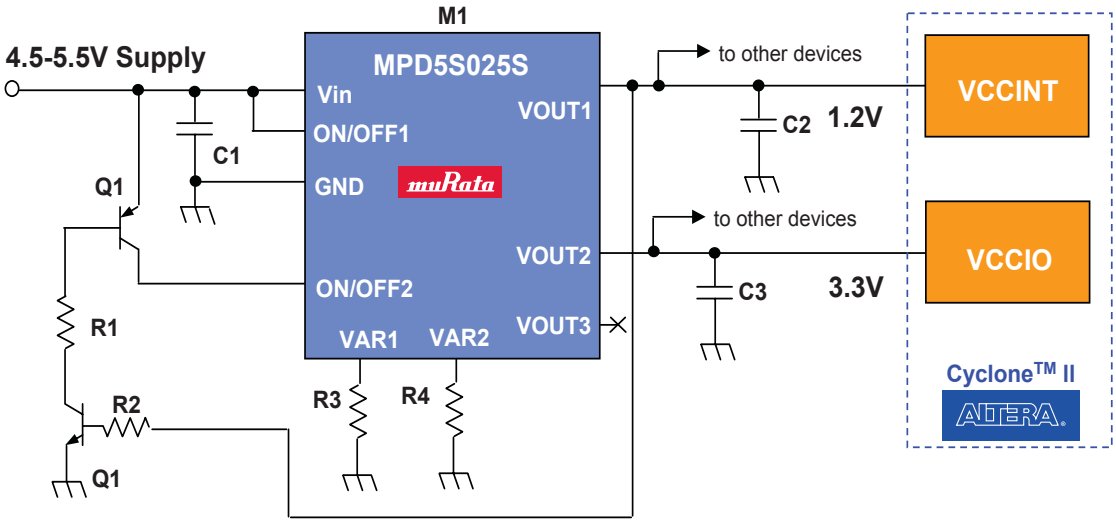

[Bill of Materials]

Reference	Qty	Description	Manufacturer	Part Number
M1	1	1.6A/1.6A/0.3A-out DC-DC converter, Triple, SIP	Murata	MPD5S025S
C1,C2,C3	3	Ceramic, 1uF, 16V, B, 10%	Murata	GRM188B31C105KA92
Q1	1	Dual, 50V, 100mA	Panasonic	XP04601
R1,R2	2	47 kΩ, 1/16W, 5%	Std	Std
R3	1	2285Ω, 1/16W, 0.5%	Std	Std
R4	1	1.8kΩ, 1/16W, 0.5%	Std	Std

Download data sheets for DC–DC Converters mentioned in this reference guide at www.murata.com/power/fpga/altera

Petitioners
Ex. 1043, p. 14

Cyclone™ II FPGA Design 3
3.3V Input, 3A Solution

MURATA PRODUCTS RoHS Compliant

[Features]

- SIP configuration saves PCB space.
- Adjustable Start-up Sequence via On/Off Control Pins.
- Wide input voltage range of MPD6S012S is from 3.0V to 5.5V.
- Trimmable Output Voltage (1.1V to 3.6V)

[Schematic]

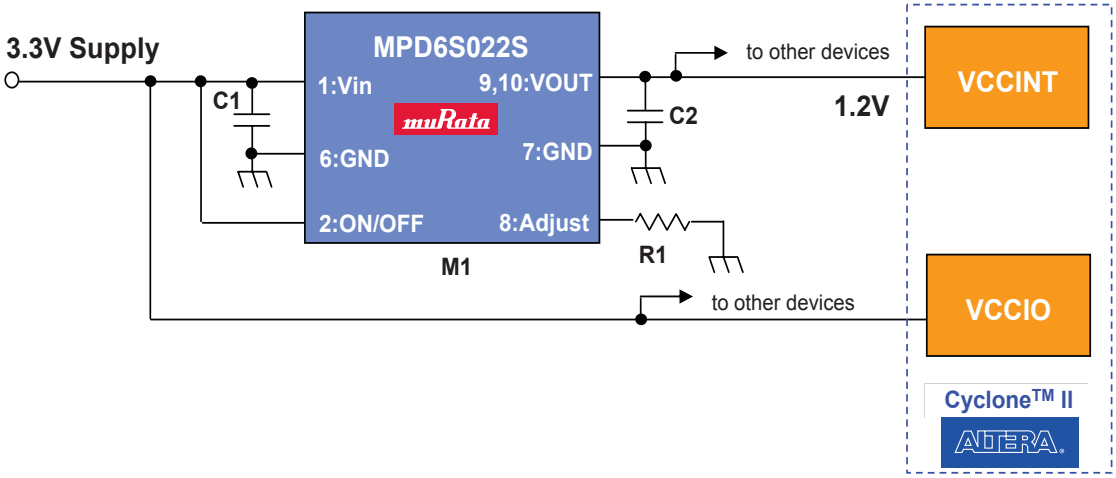

[List of Material]

Reference	Qty	Description	Manufacturer	Part Number
M1	1	3A-out DC-DC converter, SIP	Murata	MPD6S022S
C1,C2	2	Ceramic, 0.1uF, 50V, R, 10%	Murata	GRM188R11H104KA93
R1	1	750Ω, 1/16W, 0.5%	Std	Std

Download data sheets for DC–DC Converters mentioned in this reference guide at www.murata.com/power/fpga/altera

Petitioners
Ex. 1043, p. 15

Cyclone™ II FPGA Design 4
12V Input, 6A Solution

MURATA PRODUCTS RoHS Compliant

[Features]

- Auto-Tracking Feature Makes Sequencing Design Easy
- POLA (Point-of-Load Alliance) Device; MPDTH12050WAS(H) (M1,M2)

[Schematic]

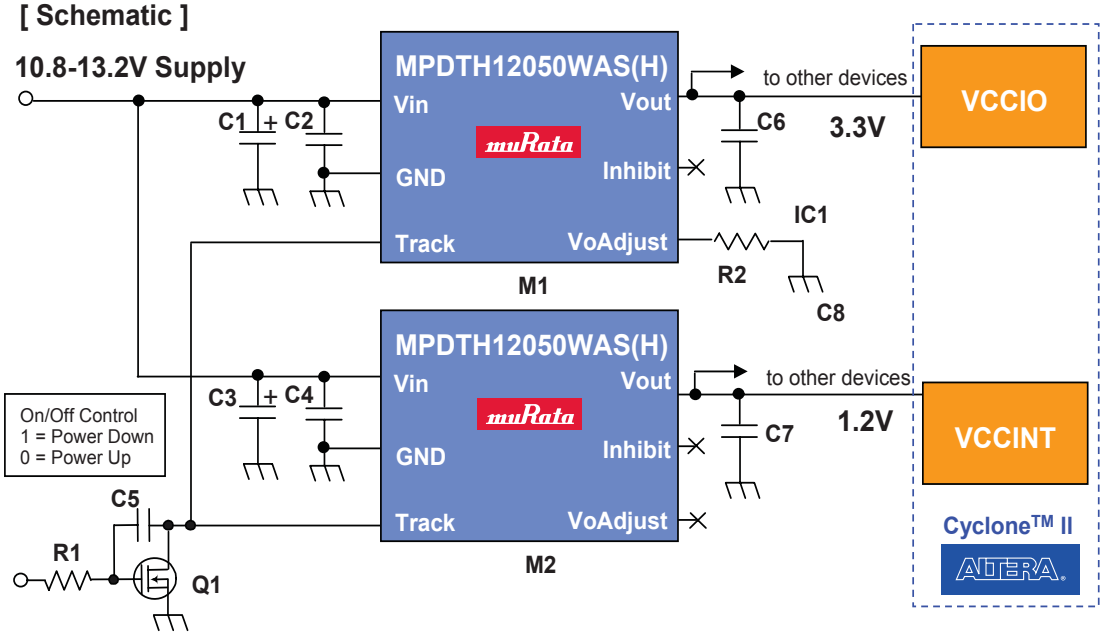

[List of Material]

Reference	Qty	Description	Manufacturer	Part Number
M1,M2	2	6A-out DC-DC converter, SMT	Murata	MPDTH12050WAS
C1,C3	2	Poly-Aluminum, 100uF, 16V	Panasonic	EEFWA1C101P
C2,C4,C6,C7	4	Ceramic, 10uF, 16V, R, 10%	Murata	GRM32DR11C106KA01
C5	1	Ceramic, 0.1uF, 50V, R, 10%	Murata	GRM188R11H104KA93
Q1	1	30V, 100mA	Rohm	2SK3019FTL
R1	1	22 kΩ, 1/16W, 5%	Std	Std
R2	1	2kΩ, 1/16W, 0.5%	Std	Std

Download data sheets for DC–DC Converters mentioned in this reference guide at www.murata.com/power/fpga/altera

Petitioners
Ex. 1043, p. 16

Cyclone™ II FPGA Design 5
5V Input, 7A Solution

MURATA PRODUCTS RoHS Compliant

[Features]

- Industry-Standard Pin Compatibility, Small Footprint, High Efficiency
- Adjustable Start-up Sequence via On/Off Contro Pins.
- Trimmable Output Voltage (0.8V to 3.3V)

[Schematic]

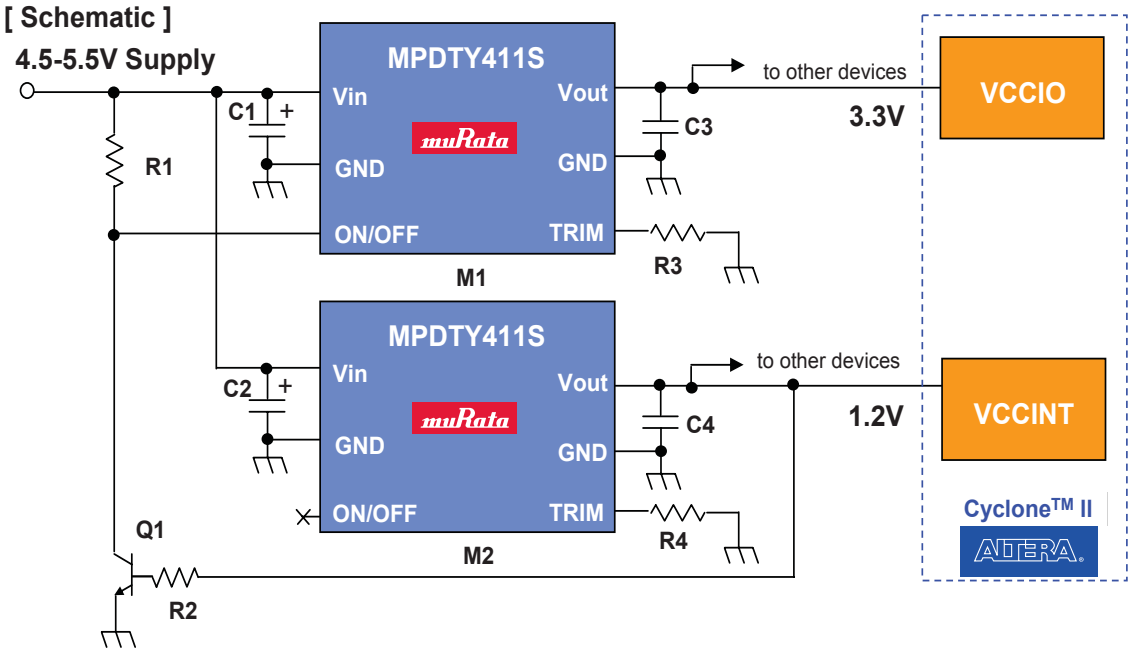

[List of Material]

Reference	Qty	Description	Manufacturer	Part Number
M1,M2	2	7A-out DC-DC converter, SMT	Murata	MPDTY411S
C1,C2	2	Poly-Aluminum, 100uF, 6.3V	Panasonic	EEFUD0J101XR
C3,C4	2	Ceramic, 47uF 6.3V, B, 20%	Murata	GRM31CB30J476ME18
Q1	1	50V, 150mA	Panasonic	2SD1819A
R1,R2	2	22 kΩ, 1/16W, 5%	Std	Std
R3	1	5.46kΩ, 1/16W, 0.5%	Std	Std
R4	1	60.9kΩ, 1/16W, 0.5%	Std	Std

Download data sheets for DC–DC Converters mentioned in this reference guide at www.murata.com/power/fpga/altera

Petitioners
Ex. 1043, p. 17

Stratix® III FPGA Design 1
6.5 -14V Input, 8A Solution

MURATA PRODUCTS RoHS Compliant

[Features]

- Low Profile (H<4.2mm), High Efficiency
- Adjustable Start-up Sequence via On/Off Control Pins.

[Schematic]

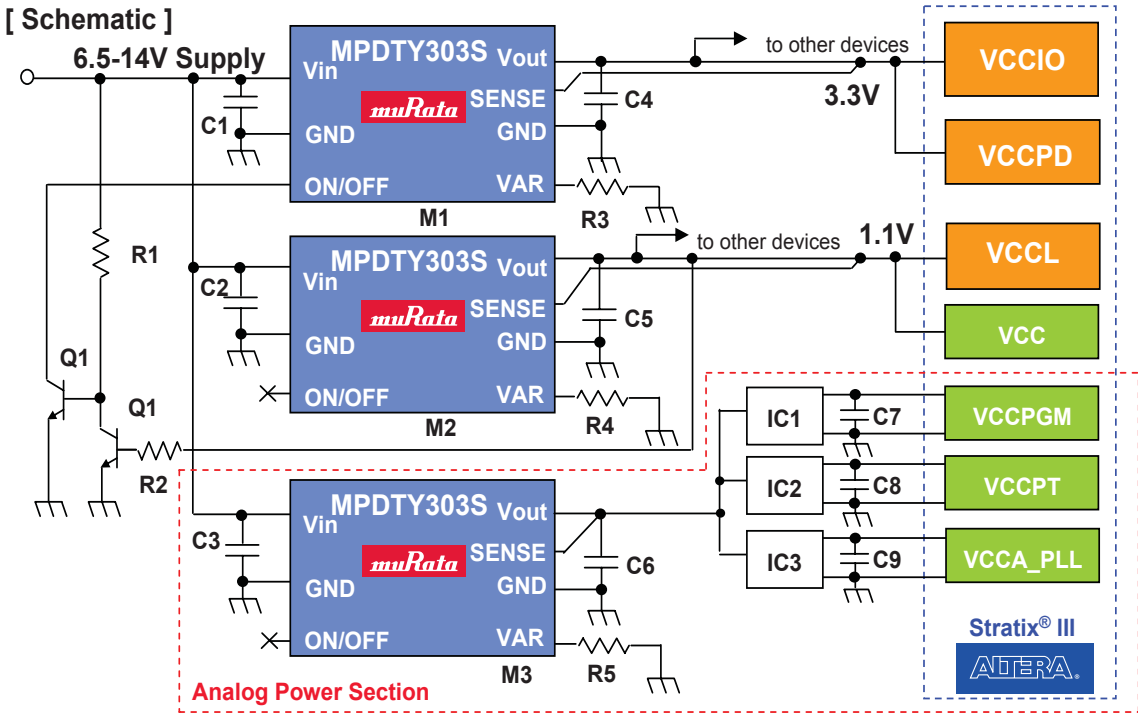

[List of Material]

Reference	Qty	Description	Manufacturer	Part Number
M1-M3	3	8A-out DC-DC converter, SMT	Murata	MPDTY303S
C1-C3	3	Ceramic, 22uF, 16V, B, 10%	Murata	GRM32EB31C226KE16
C4-C6	3	Ceramic, 47uF, 6.3V, B, 20%	Murata	GRM31CB30J476ME18
C7-C9	3	Ceramic, 1uF, 16V, B, 10%	Murata	GRM188B31C105KA92
IC1	1	1.8-3.3V LDO, 700mA	Torex	XC6210P332DR
IC2-IC3	2	2.5V LDO, 700mA	Torex	XC6210P122DR
Q1	1	Dual, 50V, 100mA	Panasonic	XP06501
R1,R2	2	47 kΩ, 1/16W, 5%	Std	Std
R3	1	4.01kΩ, 1/16W, 0.5%	Std	Std
R4	1	45.3kΩ, 1/16W, 0.5%	Std	Std
R5	1	3.17kΩ, 1/16W, 0.5%	Std	Std

Download data sheets for DC–DC Converters mentioned in this reference guide at www.murata.com/power/fpga/altera

Petitioners
Ex. 1043, p. 18

Stratix® III FPGA Design 2
7-14V Input, 12A High Speed Response Solution

MURATA PRODUCTS RoHS Compliant

[Features]

- Fast Transient Response, High Efficiency
- Adjustable Start-up Sequence via On/Off Control Pins.

[Schematic]

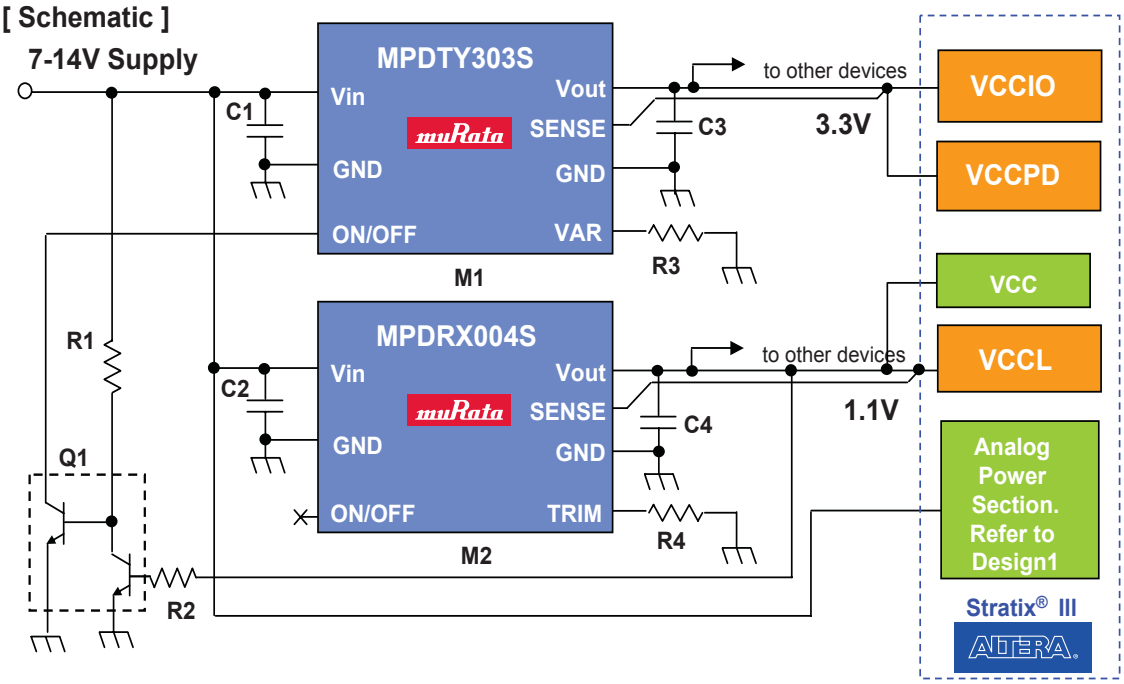

[List of Material]

Reference	Qty	Description	Manufacturer	Part Number
M1	1	8A-out DC-DC converter, SMT	Murata	MPDTY303S
M2	1	12A-out DC-DC converter, SMT	Murata	MPDRX004S
C1,C2	2	Ceramic, 22uF, 16V, B, 10%	Murata	GRM32EB31C226KE16
C3,C4	2	Ceramic, 47uF, 6.3V, B, 20%	Murata	GRM31CB30J476ME18
Q1	1	Dual, 50V, 100mA	Panasonic	XP06501
R1,R2	2	47 kΩ, 1/16W, 5%	Std	Std
R3	1	4.01kΩ, 1/16W, 0.5%	Std	Std
R4	1	8.5kΩ, 1/16W, 0.5%	Std	Std

Download data sheets for DC–DC Converters mentioned in this reference guide at www.murata.com/power/fpga/altera

Stratix® III FPGA Design 3
5V Input, 16A High Speed Response Solution

MURATA PRODUCTS RoHS Compliant

[Features]

- Fast Transient Response, High Efficiency MPDRX002S.
- Adjustable Start-up Sequence via On/Off Control Pins.
- Industry Standard Package.

[Schematic]

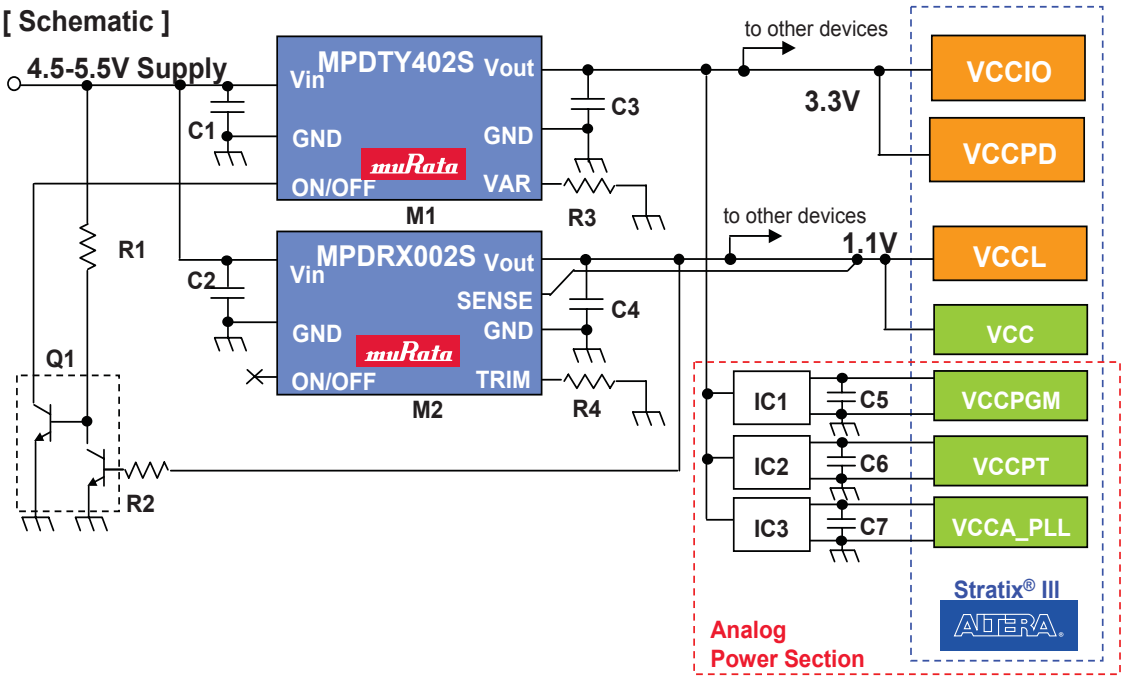

[List of Material]

Reference	Qty	Description	Manufacturer	Part Number
M1	1	16A-out DC-DC converter, SMT	Murata	MPDTY402S
M2	1	16A-out DC-DC converter, SMT	Murata	MPDRX002S
C1-C4	4	Ceramic, 47uF, 6.3V, B, 20%	Murata	GRM31CB30J476ME18
C5-C7	3	Ceramic, 1uF, 16V, B, 10%	Murata	GRM188B31C105KA92
IC1	1	1.8-2.5V LDO, 700mA	Torex	XC6210P332DR
IC2-IC3	2	2.5V LDO, 700mA	Torex	XC6210P122DR
Q1	1	Dual, 50V, 100mA	Panasonic	XP06501
R1,R2	2	47 kΩ, 1/16W, 5%	Std	Std
R3	1	3160Ω, 1/16W, 0.5%	Std	Std
R4	1	8.5kΩ, 1/16W, 0.5%	Std	Std

Download data sheets for DC–DC Converters mentioned in this reference guide at www.murata.com/power/fpga/altera

Petitioners
Ex. 1043, p. 20

Stratix® III FPGA Design 4
5V Input, 16A High Speed Response Solution

MURATA PRODUCTS RoHS Compliant

[Features]

- Ultra low profile package (t=4.2mmMAX.)
- High Speed response ; MPDRX312S (M2)

[Schematic]

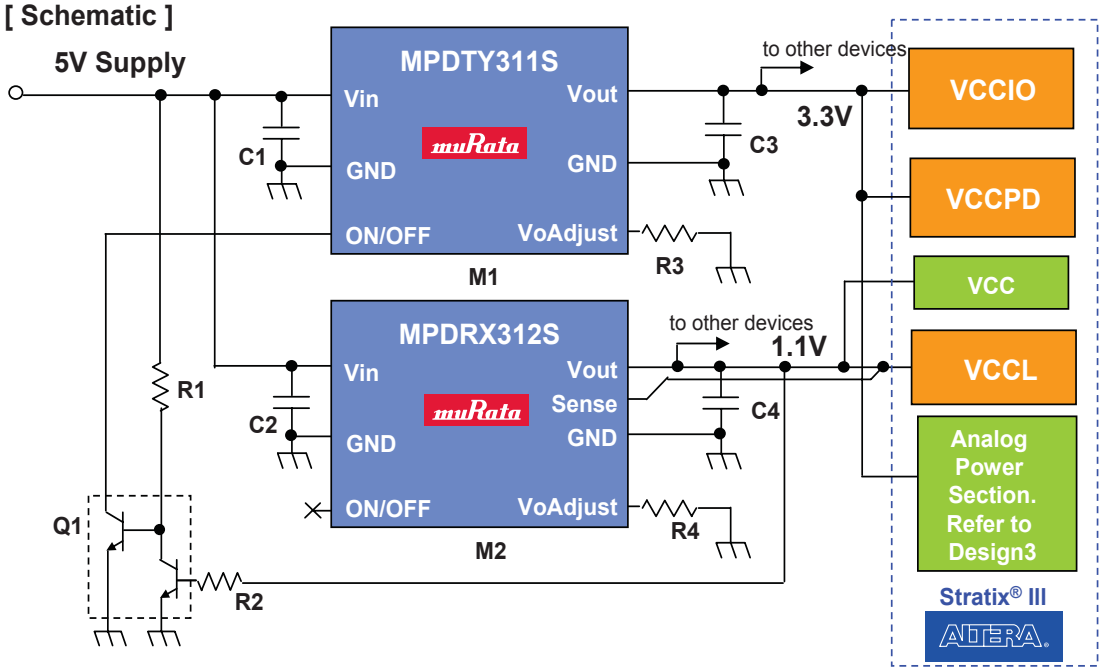

[List of Material]

Reference	Qty	Description	Manufacturer	Part Number
M1	1	16A-out DC-DC converter, SMT	Murata	MPDTY311S
M2	1	16A-out DC-DC converter, SMT	Murata	MPDRX312S
C1,C2,C3,C4	4	Ceramic, 47uF, 6.3V, R, 10%	Murata	GRM31CB30J476KE18
Q1	1	Dual transistor, 50V,0.1A	Panasonic	XP06501
R1,R2	1	47 kΩ, 1/16W, 5%	Std	Std
R3	1	560Ω, 1/16W, 0.5%	Std	Std
R4	1	52.6kΩ, 1/16W, 0.5%	Std	Std

Download data sheets for DC–DC Converters mentioned in this reference guide at www.murata.com/power/fpga/altera

Petitioners
Ex. 1043, p. 21

Stratix® III FPGA Design 5
12V Input, 26A High Speed Response Solution

MURATA PRODUCTS RoHS Compliant

[Features]

- Fast Transient Response DC-DC(M1,M2)
- Wide Input Voltage, great for IBA (Intermediate Bus Architecture)

[Schematic]

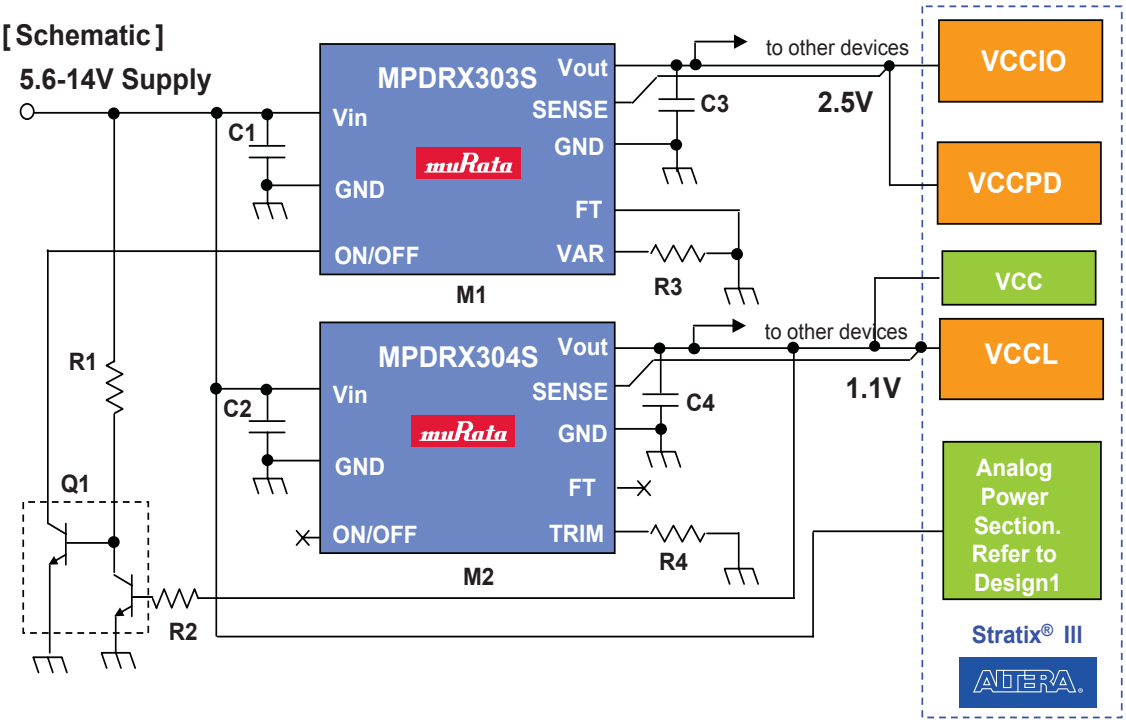

[List of Material]

Reference	Qty	Description	Manufacturer	Part Number
M1	1	26A-out DC-DC converter, SMT	Murata	MPDRX303S
M2	1	26A-out DC-DC converter, SMT	Murata	MPDRX304S
C1,C2	2	Ceramic, 22uF, 16V, B, 10%	Murata	GRM32EB31C226KE16
C3,C4	1	Ceramic, 100uF, 6.3V, B, 20%	Murata	GRM32EB30J107ME16
Q1	1	Dual transistor, 50V,0.1A	Panasonic	XP06501
R1,R2	1	47kΩ, 1/16W, 5%	Std	Std
R3	1	3.613kΩ, 1/16W, 0.5%	Std	Std
R4	1	48.338kΩ, 1/16W, 0.5%	Std	Std

Download data sheets for DC–DC Converters mentioned in this reference guide at www.murata.com/power/fpga/altera

Petitioners
Ex. 1043, p. 22

Stratix® II FPGA Design 1
6.5-14V Input, 8A Solution

MURATA PRODUCTS RoHS Compliant

[Features]

- Low Profile (H<4.2mm), High Efficiency MPDTY303S.
- Adjustable Start-up Sequence via On/Off Control Pins.

[Schematic]

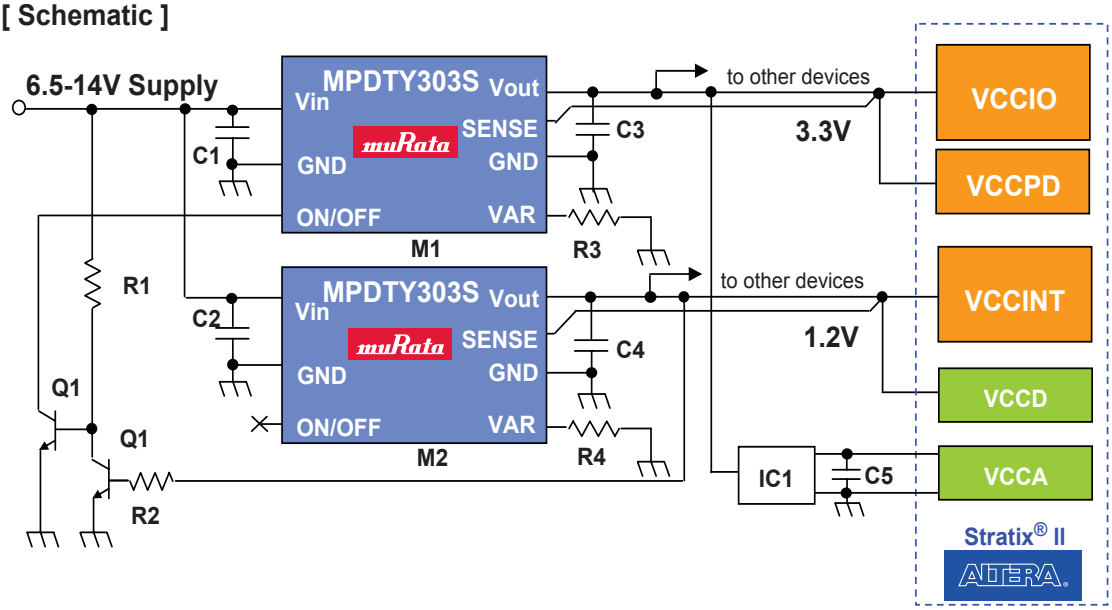

[List of Material]

Reference	Qty	Description	Manufacturer	Part Number
M1,M2	2	8A-out DC-DC converter, SMT	Murata	MPDTY303S
C1,C2	2	Ceramic, 22uF, 16V, B, 10%	Murata	GRM32EB31C226KE16
C3,C4	2	Ceramic, 47uF, 6.3V, B, 20%	Murata	GRM31CB30J476ME18
C5	1	Ceramic, 1uF, 16V, B, 10%	Murata	GRM188B31C105KA92
IC1	1	1.2V LDO, 700mA	Torex	XC6210P122DR
Q1	1	Dual, 50V, 100mA	Panasonic	XP06501
R1,R2	2	47 kΩ, 1/16W, 5%	Std	Std
R3	1	4.01kΩ, 1/16W, 0.5%	Std	Std
R4	1	45.3kΩ, 1/16W, 0.5%	Std	Std

Download data sheets for DC–DC Converters mentioned in this reference guide at www.murata.com/power/fpga/altera

Petitioners
Ex. 1043, p. 23

Stratix® II FPGA Design 2
7-14V Input, 12A High Speed Response Solution

MURATA PRODUCTS RoHS Compliant

[Features]

- Fast Transient Response, High Efficiency MPDRX004S.
- Adjustable Start-up Sequence via On/Off Control Pins.

[Schematic]

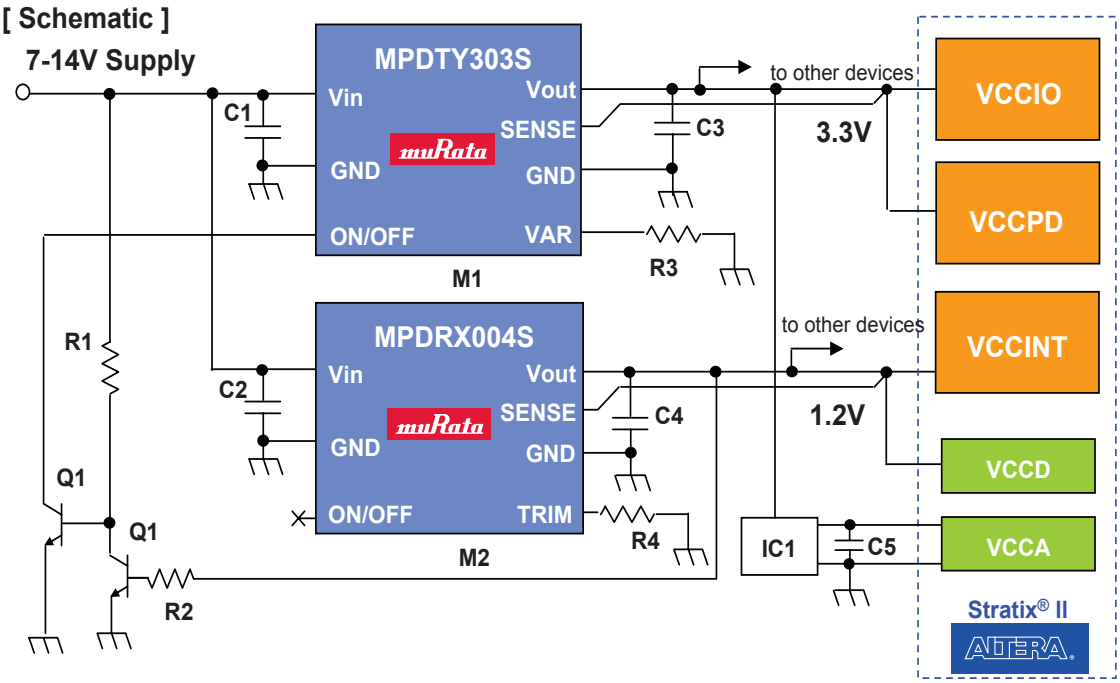

[List of Material]

Reference	Qty	Description	Manufacturer	Part Number
M1	1	8A-out DC-DC converter, SMT	Murata	MPDTY303S
M2	1	12A-out DC-DC converter, SMT	Murata	MPDRX004S
C1,C2	2	Ceramic, 22uF, 16V, B, 10%	Murata	GRM32EB31C226KE16
C3,C4	2	Ceramic, 47uF, 6.3V, B, 20%	Murata	GRM31CB30J476ME18
C5	1	Ceramic, 1uF, 16V, B, 10%	Murata	GRM188B31C105KA92
IC1	1	1.2V LDO, 700mA	Torex	XC6210P122DR
Q1	1	Dual Transister, 50V, 100mA	Panasonic	XP06501
R1,R2	2	47 kΩ, 1/16W, 5%	Std	Std
R3	1	4.01kΩ, 1/16W, 0.5%	Std	Std
R4	1	8.5kΩ, 1/16W, 0.5%	Std	Std

Download data sheets for DC–DC Converters mentioned in this reference guide at www.murata.com/power/fpga/altera

Petitioners
Ex. 1043, p. 24

Stratix® II FPGA Design 3
5V Input, 16A High Speed Response Solution

MURATA PRODUCTS RoHS Compliant

[Features]

- Fast Transient Response, High Efficiency MPDRX002S.
- Adjustable Start-up Sequence via On/Off Control Pins.

[Schematic]

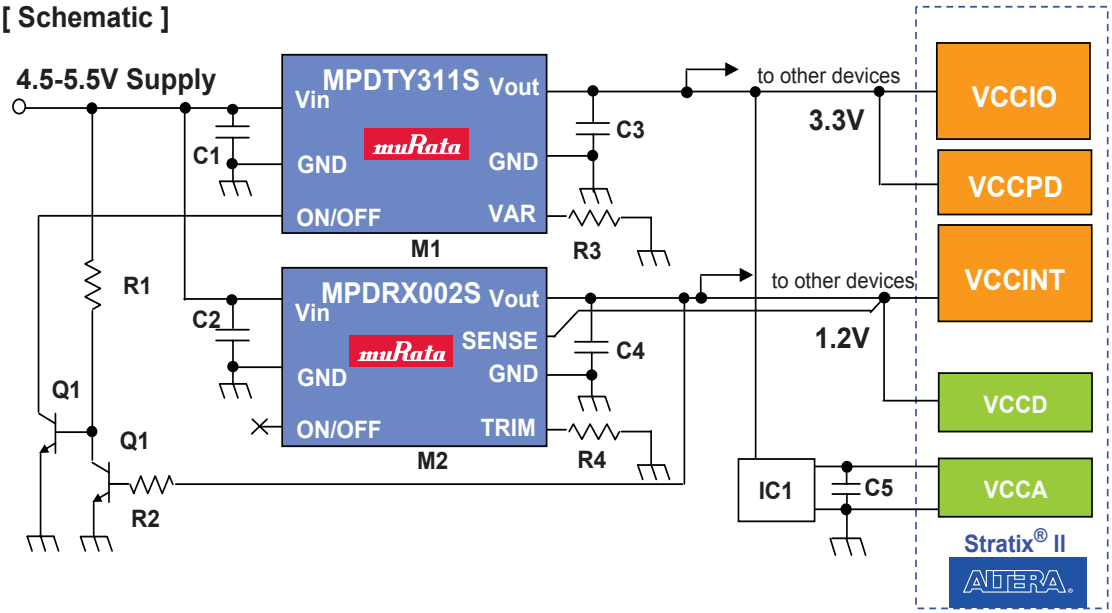

[List of Material]

Reference	Qty	Description	Manufacturer	Part Number
M1	1	16A-out DC-DC converter, SMT	Murata	MPDTY311S
M2	1	16A-out DC-DC converter, SMT	Murata	MPDRX002S
C1-C4	4	Ceramic, 47uF, 6.3V, B, 20%	Murata	GRM31CB30J476ME18
C5	1	Ceramic, 1uF, 16V, B, 10%	Murata	GRM188B31C105KA92
IC1	1	1.2V LDO, 700mA	Torex	XC6210P122DR
Q1	1	Dual, 50V, 100mA	Panasonic	XP06501
R1,R2	2	47 kΩ, 1/16W, 5%	Std	Std
R3	1	560Ω, 1/16W, 0.5%	Std	Std
R4	1	8.5kΩ, 1/16W, 0.5%	Std	Std

Download data sheets for DC–DC Converters mentioned in this reference guide at www.murata.com/power/fpga/altera

Petitioners
Ex. 1043, p. 25

Stratix® II FPGA Design 4
12V Input, 18A Solution

MURATA PRODUCTS RoHS Compliant

[Features]

- Auto-Tracking Feature Makes Sequencing Design Easy
- POLA (Point-of-Load Alliance) Device; MPDTH12020WAS(H) (M1,M2)

[Schematic]

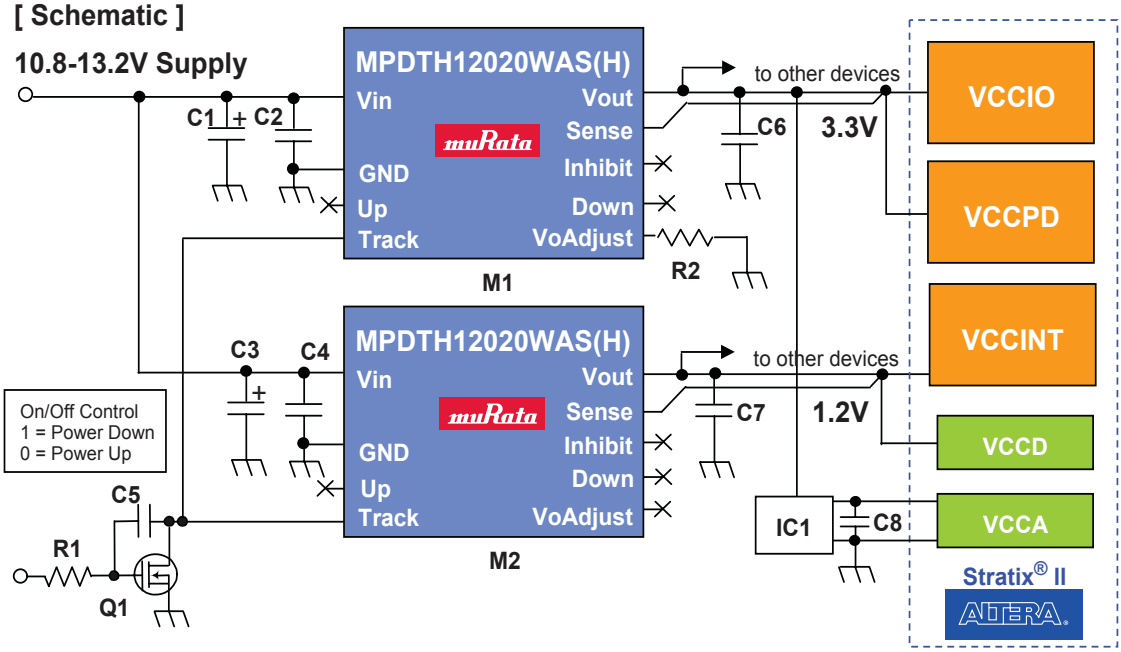

[List of Material]

Reference	Qty	Description	Manufacturer	Part Number
M1,M2	2	18A-out DC-DC converter, SMT	Murata	MPDTH12020WAS
C1,C3	2	Poly-Aluminum, 560uF, 25V	Panasonic	EEUFC1E561S
C2,C4	2	Ceramic, 10uF, 16V, R, 10%	Murata	GRM32DR11C106KA01
C5	1	Ceramic, 0.1uF, 50V, R, 10%	Murata	GRM188R11H104KA93
C6,C7	2	Ceramic, 47uF, 6.3V, B, 20%	Murata	GRM31CB30J476ME18
C8	1	Ceramic, 1uF, 16V, B, 10%	Murata	GRM188B31C105KA92
IC1	1	1.2V LDO, 700mA	Torex	XC6210P122DR
Q1	1	30V, 100mA	Rohm	2SK3019FTL
R1	1	22 kΩ, 1/16W, 5%	Std	Std
R2	1	2kΩ, 1/16W, 0.5%	Std	Std

Download data sheets for DC–DC Converters mentioned in this reference guide at www.murata.com/power/fpga/altera

Petitioners
Ex. 1043, p. 26

Stratix® II FPGA Design 5
12V Input, 6A Solution

MURATA PRODUCTS RoHS Compliant

[Features]

- Auto-Tracking Feature Makes Sequencing Design Easy
- POLA (Point-of-Load Alliance) Device; MPDTH12050WAS(H) (M1,M2)

[Schematic]

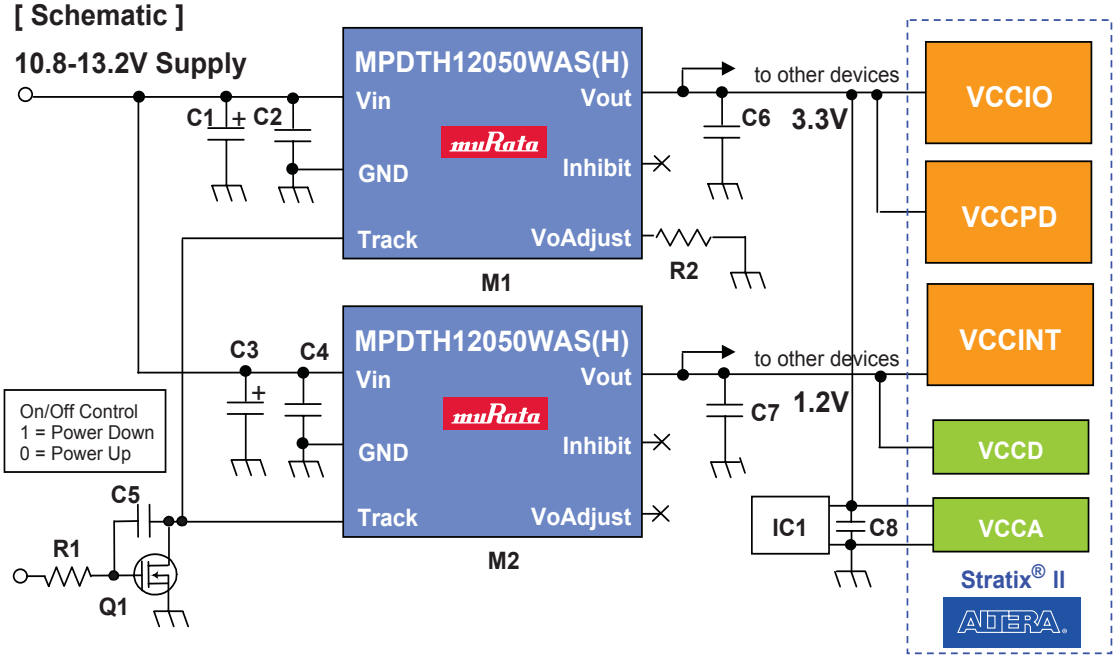

[List of Material]

Reference	Qty	Description	Manufacturer	Part Number
M1,M2	2	6A-out DC-DC converter, SMT	Murata	MPDTH12050WAS
C1,C3	2	Poly-Aluminum, 100uF, 16V	Panasonic	EEFWA1C101P
C2,C4,C6,C7	4	Ceramic, 10uF, 16V, R, 10%	Murata	GRM32DR11C106KA01
C5	1	Ceramic, 0.1uF, 50V, R, 10%	Murata	GRM188R11H104KA93
C8	1	Ceramic, 1uF, 16V, B, 10%	Murata	GRM188B31C105KA92
IC1	1	1.2V LDO, 700mA	Torex	XC6210P122DR
Q1	1	30V, 100mA	Rohm	2SK3019FTL
R1	1	22 kΩ, 1/16W, 5%	Std	Std
R2	1	2kΩ, 1/16W, 0.5%	Std	Std

Download data sheets for DC–DC Converters mentioned in this reference guide at www.murata.com/power/fpga/altera

Petitioners
Ex. 1043, p. 27

Stratix® II GX FPGA Design 1
6.5-14V Input, 8A Solution

MURATA PRODUCTS RoHS Compliant

[Features]

- Low Profile (H<4.2mm), High Efficiency MPDTY303S.
- Adjustable Start-up Sequence via On/Off Control Pins.

[Schematic]

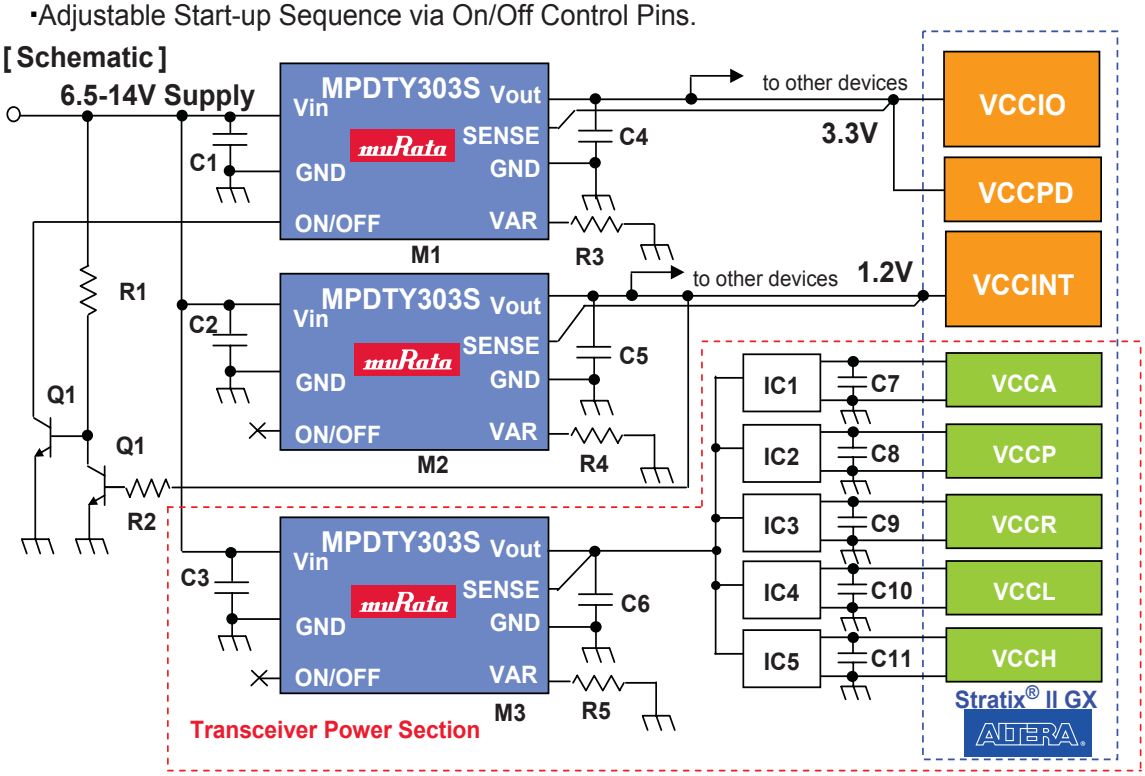

[List of Material]

Reference	Qty	Description	Manufacturer	Part Number
M1-M3	3	8A-out DC-DC converter, SMT	Murata	MPDTY303S
C1-C3	3	Ceramic, 22uF, 16V, B, 10%	Murata	GRM32EB31C226KE16
C4-C6	3	Ceramic, 47uF, 6.3V, B, 20%	Murata	GRM31CB30J476ME18
C7-C11	5	Ceramic, 1uF, 16V, B, 10%	Murata	GRM188B31C105KA92
IC1	1	3.3V LDO, 700mA	Torex	XC6210P332DR
IC2-IC5	4	1.2V LDO, 700mA	Torex	XC6210P122DR
Q1	1	Dual, 50V, 100mA	Panasonic	XP06501
R1,R2	2	47 kΩ, 1/16W, 5%	Std	Std
R3	1	4.01kΩ, 1/16W, 0.5%	Std	Std
R4	1	45.3kΩ 1/16W, 0.5%	Std	Std
R5	1	3.17kΩ 1/16W, 0.5%	Std	Std

Download data sheets for DC–DC Converters mentioned in this reference guide at www.murata.com/power/fpga/altera

Petitioners
Ex. 1043, p. 28

Stratix® II GX FPGA Design 2
7-14V Input, 12A High Speed Response Solution

MURATA PRODUCTS RoHS Compliant

[Features]

- Fast Transient Response, High Efficiency MPDRX004S.
- Adjustable Start-up Sequence via On/Off Control Pins.

[Schematic]

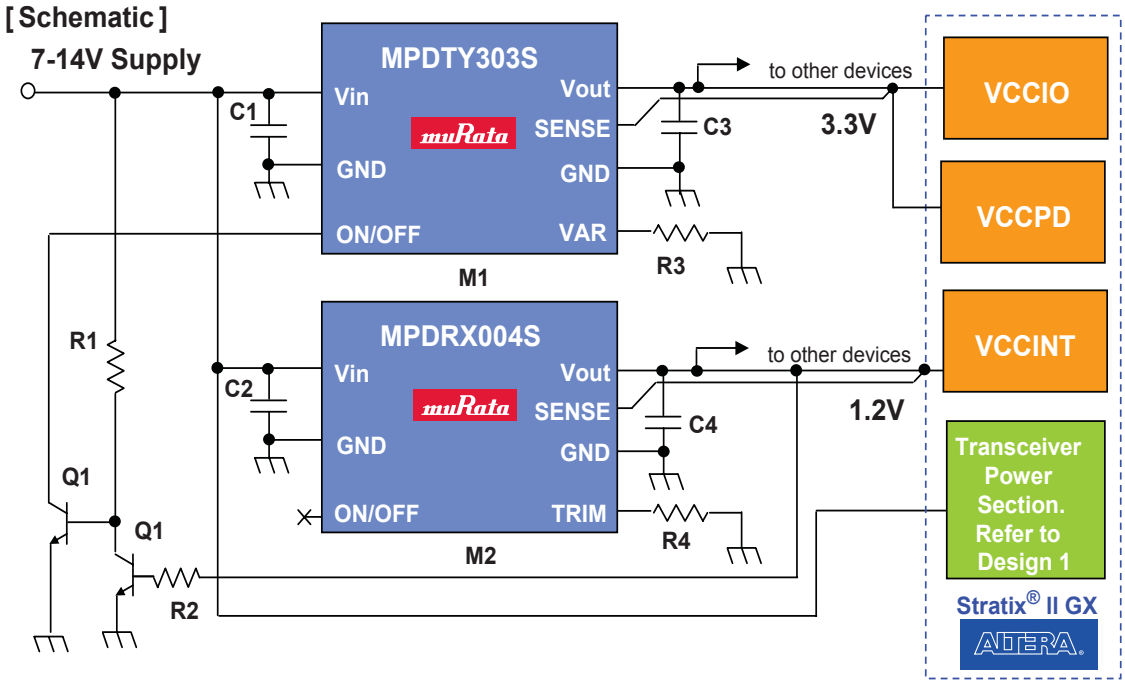

[List of Material]

Reference	Qty	Description	Manufacturer	Part Number
M1	1	8A-out DC-DC converter, SMT	Murata	MPDTY303S
M2	1	12A-out DC-DC converter, SMT	Murata	MPDRX004S
C1,C2	2	Ceramic, 22uF, 16V, B, 10%	Murata	GRM32EB31C226KE16
C3,C4	2	Ceramic, 47uF, 6.3V, B, 20%	Murata	GRM31CB30J476ME18
Q1	1	Dual, 50V, 100mA	Panasonic	XP06501
R1,R2	2	47 kΩ, 1/16W, 5%	Std	Std
R3	1	4.01kΩ, 1/16W, 0.5%	Std	Std
R4	1	8.5kΩ, 1/16W, 0.5%	Std	Std

Download data sheets for DC–DC Converters mentioned in this reference guide at www.murata.com/power/fpga/altera

Petitioners
Ex. 1043, p. 29

Stratix® II GX FPGA Design 3
5V Input, 16A High Speed Response Solution

MURATA PRODUCTS RoHS Compliant

[Features]

- Fast Transient Response, High Efficiency MPDRX002S.
- Adjustable Start-up Sequence via On/Off Control Pins.

[Schematic]

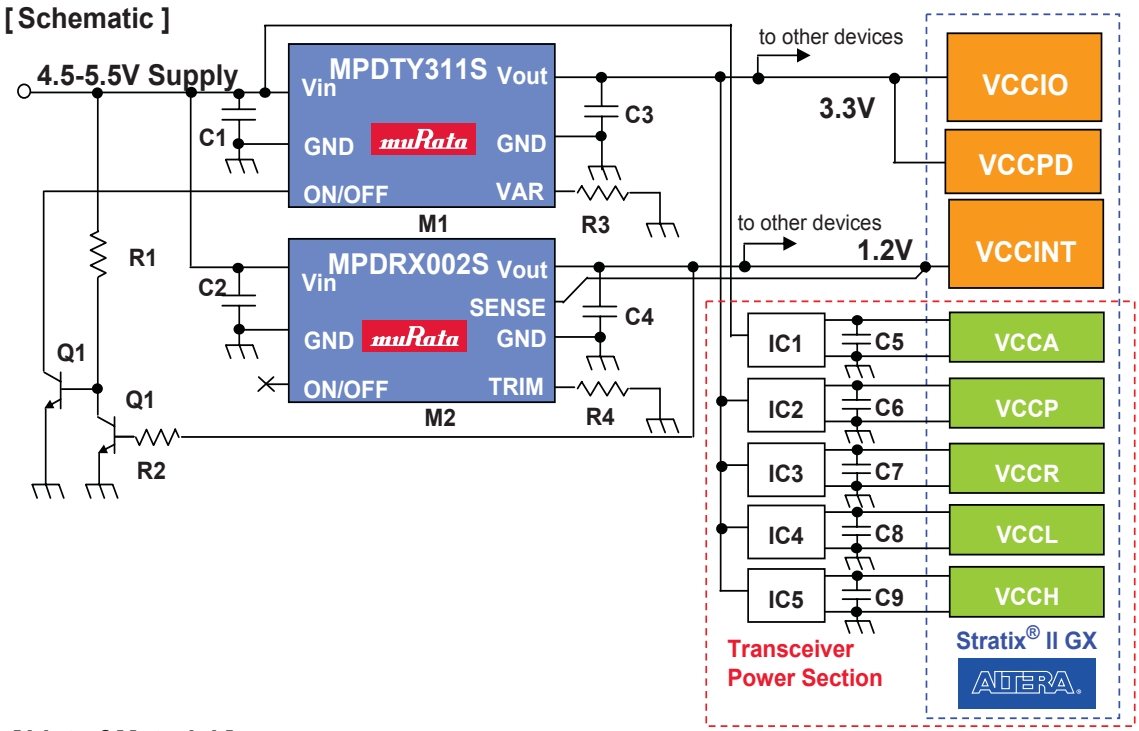

[List of Material]

Reference	Qty	Description	Manufacturer	Part Number
M1	1	16A-out DC-DC converter, SMT	Murata	MPDTY311S
M2	1	16A-out DC-DC converter, SMT	Murata	MPDRX002S
C1-C4	4	Ceramic, 47uF, 6.3V, B, 20%	Murata	GRM31CB30J476ME18
C5-C9	5	Ceramic, 1uF, 16V, B, 10%	Murata	GRM188B31C105KA92
IC1	1	3.3V LDO, 700mA	Torex	XC6210P332DR
IC2-IC5	4	1.2V LDO, 700mA	Torex	XC6210P122DR
Q1	1	Dual, 50V, 100mA	Panasonic	XP06501
R1,R2	2	47 kΩ 1/16W, 5%	Std	Std
R3	1	560Ω, 1/16W, 0.5%	Std	Std
R4	1	8.5kΩ 1/16W, 0.5%	Std	Std

Download data sheets for DC–DC Converters mentioned in this reference guide at www.murata.com/power/fpga/altera

Stratix® II GX FPGA Design 4
12V Input, 18A Solution

MURATA PRODUCTS RoHS Compliant

[Features]

- Auto-Tracking Feature Makes Sequencing Design Easy
- POLA (Point-of-Load Alliance) Device; MPDTH12020WAS(H) (M1,M2)

[Schematic]

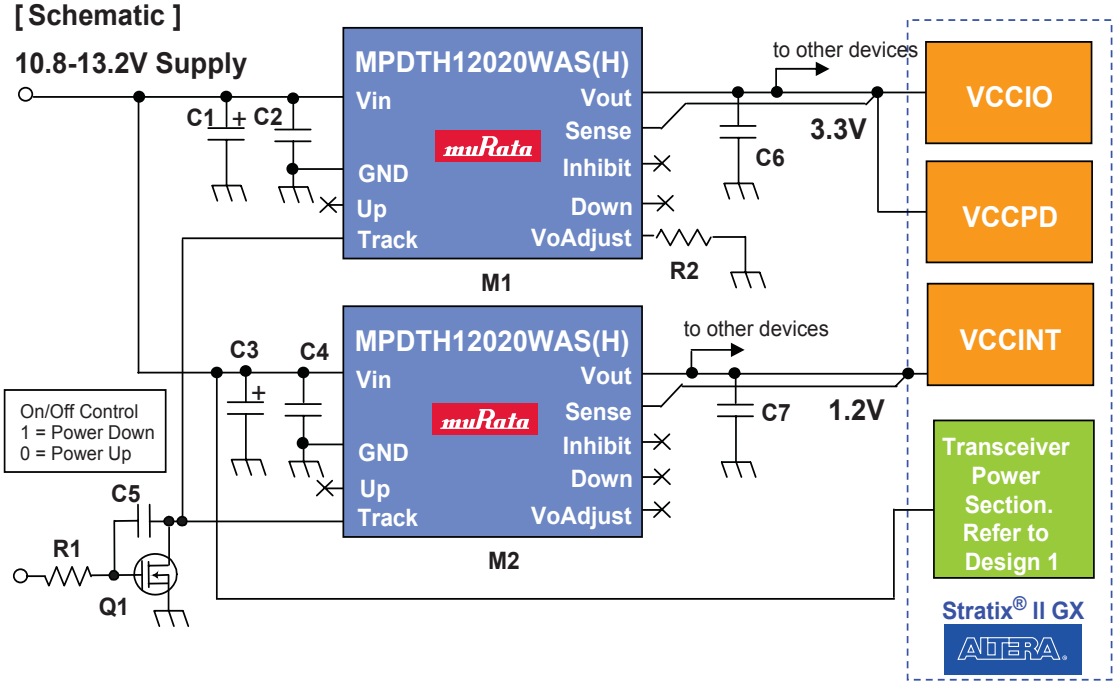

[List of Material]

Reference	Qty	Description	Manufacturer	Part Number
M1,M2	2	18A-out DC-DC converter, SMT	Murata	MPDTH12020WAS
C1,C3	2	Poly-Aluminum, 560uF, 25V	Panasonic	EEUFC1E561S
C2,C4	2	Ceramic, 10uF, 16V, R, 10%	Murata	GRM32DR11C106KA01
C5	1	Ceramic, 0.1uF, 50V, R, 10%	Murata	GRM188R11H104KA93
C6,C7	2	Ceramic, 47uF, 6.3V, B, 20%	Murata	GRM31CB30J476ME18
Q1	1	30V, 100mA	Rohm	2SK3019FTL
R1	1	22 kΩ, 1/16W, 5%	Std	Std
R2	1	2kΩ, 1/16W, 0.5%	Std	Std

Download data sheets for DC–DC Converters mentioned in this reference guide at www.murata.com/power/fpga/altera

Petitioners
Ex. 1043, p. 31

Stratix® II GX FPGA Design 5
12V Input, 6A Solution

MURATA PRODUCTS RoHS Compliant

[Features]

- Auto-Tracking Feature Makes Sequencing Design Easy
- POLA (Point-of-Load Alliance) Device; MPDTH12050WAS(H) (M1,M2)

[Schematic]

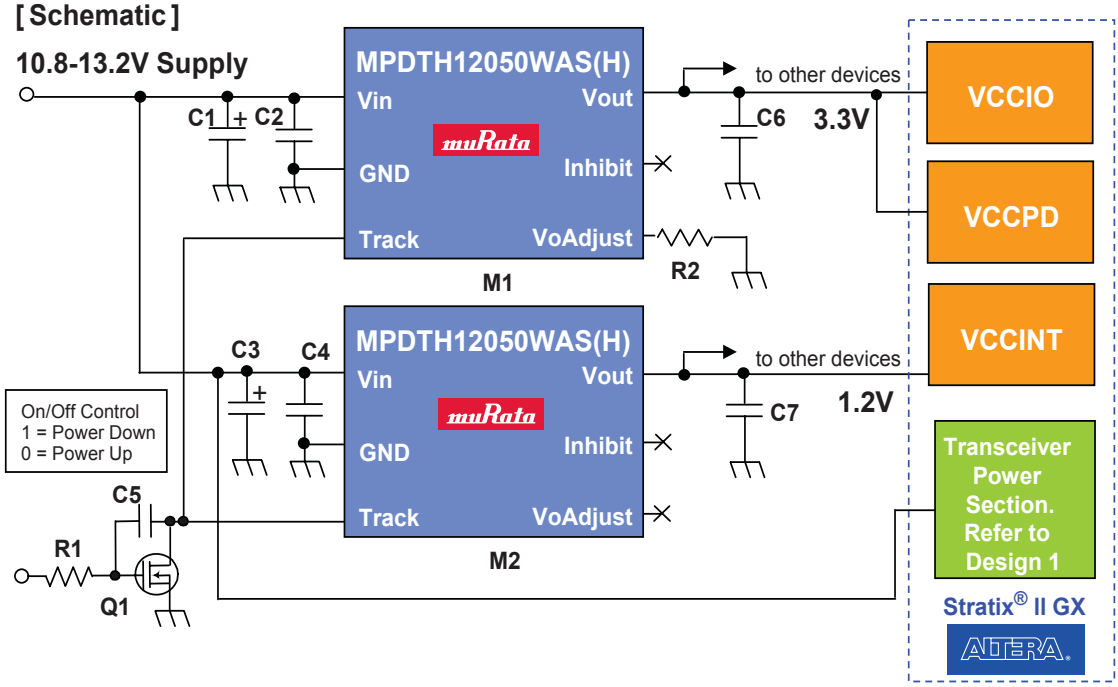

[List of Material]

Reference	Qty	Description	Manufacturer	Part Number
M1,M2	2	6A-out DC-DC converter, SMT	Murata	MPDTH12050WAS
C1,C3	2	Poly-Aluminum, 100uF, 16V	Panasonic	EEFWA1C101P
C2,C4,C6,C7	4	Ceramic, 10uF, 16V, R, 10%	Murata	GRM32DR11C106KA01
C5	1	Ceramic, 0.1uF, 50V, R, 10%	Murata	GRM188R11H104KA93
Q1	1	30V, 100mA	Rohm	2SK3019FTL
R1	1	22 kΩ, 1/16W, 5%	Std	Std
R2	1	2kΩ, 1/16W, 0.5%	Std	Std

Download data sheets for DC–DC Converters mentioned in this reference guide at www.murata.com/power/fpga/altera

Petitioners
Ex. 1043, p. 32

Stratix® GX FPGA Design 1
6.5-14V Input, 8A Solution

MURATA PRODUCTS RoHS Compliant

[Features]

- Low Profile (H<4.2mm), High Efficiency MPDTY303S.
- Adjustable Start-up Sequence via On/Off Control Pins.

[Schematic]

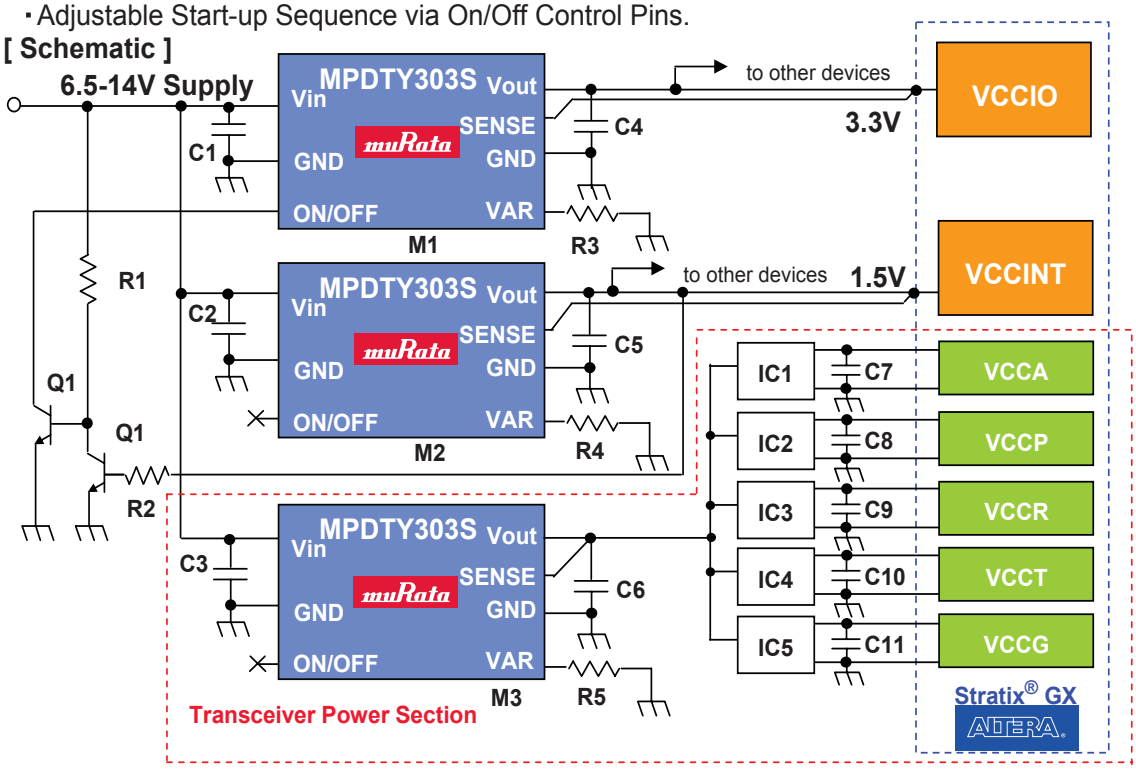

[List of Material]

Reference	Qty	Description	Manufacturer	Part Number
M1-M3	3	8A-out DC-DC converter, SMT	Murata	MPDTY303S
C1-C3	3	Ceramic, 22uF, 16V, B, 10%	Murata	GRM32EB31C226KE16
C4-C6	3	Ceramic, 47uF, 6.3V, B, 20%	Murata	GRM31CB30J476ME18
C7-C11	5	Ceramic, 1uF, 16V, B, 10%	Murata	GRM188B31C105KA92
IC1	1	3.3V LDO, 700mA	Torex	XC6210P332DR
IC2-IC5	4	1.5V LDO, 700mA	Torex	XC6210P152DR
Q1	1	Dual, 50V, 100mA	Panasonic	XP06501
R1,R2	2	47 kΩ, 1/16W, 5%	Std	Std
R3	1	4.01kΩ, 1/16W, 0.5%	Std	Std
R4	1	24.3kΩ, 1/16W, 0.5%	Std	Std
R5	1	3.17kΩ, 1/16W, 0.5%	Std	Std

Download data sheets for DC–DC Converters mentioned in this reference guide at www.murata.com/power/fpga/altera

Stratix® GX FPGA Design 2
7-14V Input, 12A High Speed Response Solution

MURATA PRODUCTS RoHS Compliant

[Features]

- Fast Transient Response, High Efficiency MPDRX004S.
- Adjustable Start-up Sequence via On/Off Control Pins.

[Schematic]

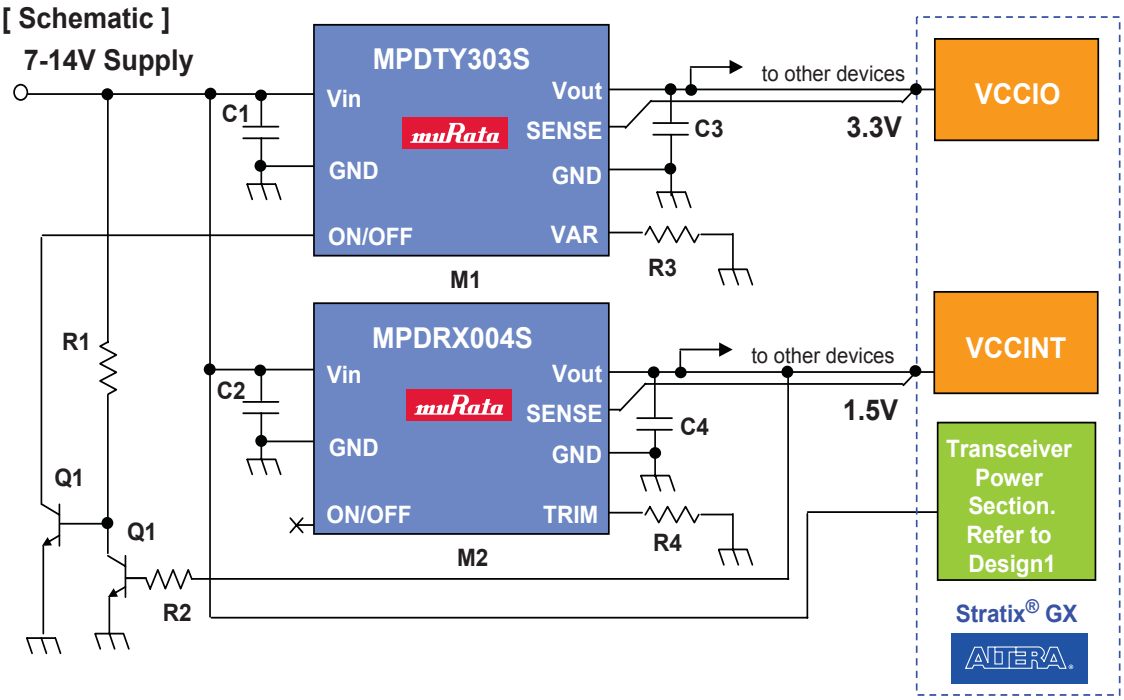

[List of Material]

Reference	Qty	Description	Manufacturer	Part Number
M1	1	8A-out DC-DC converter, SMT	Murata	MPDTY303S
M2	1	12A-out DC-DC converter, SMT	Murata	MPDRX004S
C1,C2	2	Ceramic, 22uF, 16V, B, 10%	Murata	GRM32EB31C226KE16
C3,C4	2	Ceramic, 47uF, 6.3V, B, 20%	Murata	GRM31CB30J476ME18
Q1	1	Dual, 50V, 100mA	Panasonic	XP06501
R1,R2	2	47 kΩ, 1/16W, 5%	Std	Std
R3	1	4.01kΩ, 1/16W, 0.5%	Std	Std
R4	1	2.671kΩ, 1/16W, 0.5%	Std	Std

Download data sheets for DC–DC Converters mentioned in this reference guide at www.murata.com/power/fpga/altera

Petitioners
Ex. 1043, p. 34

Stratix® GX FPGA Design 3
5V Input, 16A High Speed Response Solution

MURATA PRODUCTS RoHS Compliant

[Features]

- Fast Transient Response, High Efficiency MPDRX002S.
- Adjustable Start-up Sequence via On/Off Control Pins.

[Schematic]

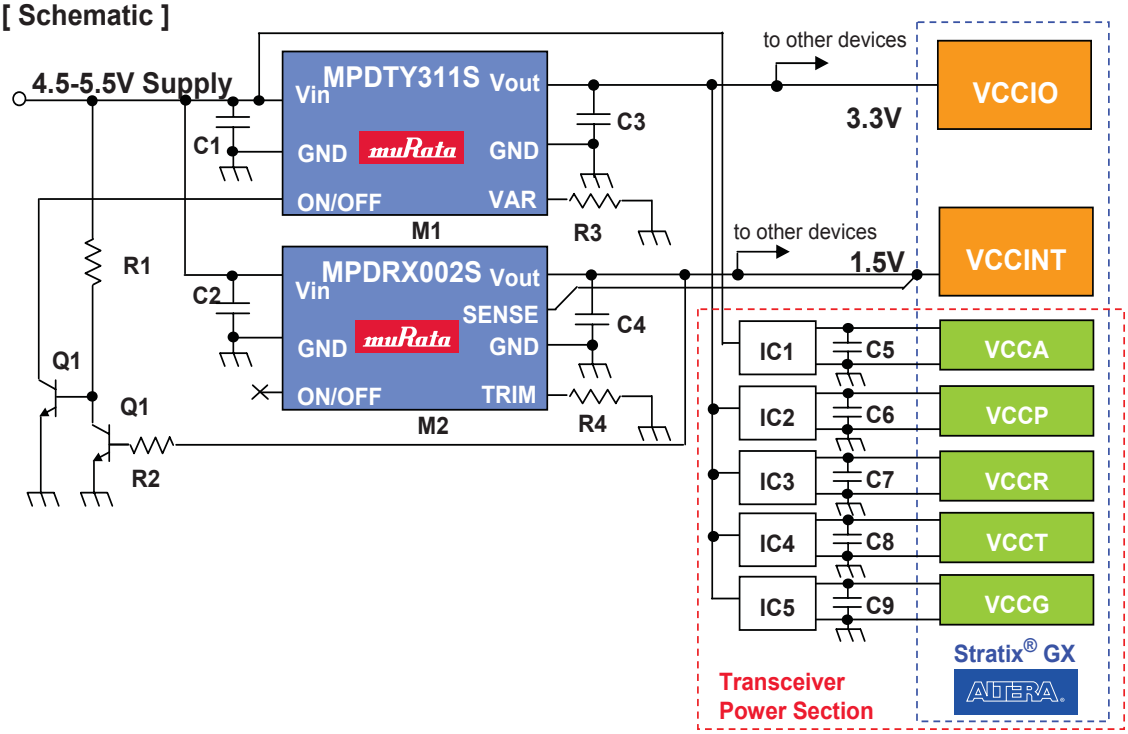

[List of Material]

Reference	Qty	Description	Manufacturer	Part Number
M1	1	16A-out DC-DC converter, SMT	Murata	MPDTY311S
M2	1	16A-out DC-DC converter, SMT	Murata	MPDRX002S
C1-C4	4	Ceramic, 47uF, 6.3V, B, 20%	Murata	GRM31CB30J476ME18
C5-C9	5	Ceramic, 1uF, 16V, B, 10%	Murata	GRM188B31C105KA92
IC1	1	3.3V LDO, 700mA	Torex	XC6210P332DR
IC2-IC5	4	1.5V LDO, 700mA	Torex	XC6210P152DR
Q1	1	Dual, 50V, 100mA	Panasonic	XP06501
R1,R2	2	47 kΩ, 1/16W, 5%	Std	Std
R3	1	560Ω, 1/16W, 0.5%	Std	Std
R4	1	2.67kΩ, 1/16W, 0.5%	Std	Std

Download data sheets for DC–DC Converters mentioned in this reference guide at www.murata.com/power/fpga/altera

Petitioners
Ex. 1043, p. 35

Stratix® GX FPGA Design 4
12V Input, 18A Solution

MURATA PRODUCTS RoHS Compliant

[Features]

- Auto-Tracking Feature Makes Sequencing Design Easy
- POLA (Point-of-Load Alliance) Device; MPDTH12020WAS(H) (M1,M2)

[Schematic]

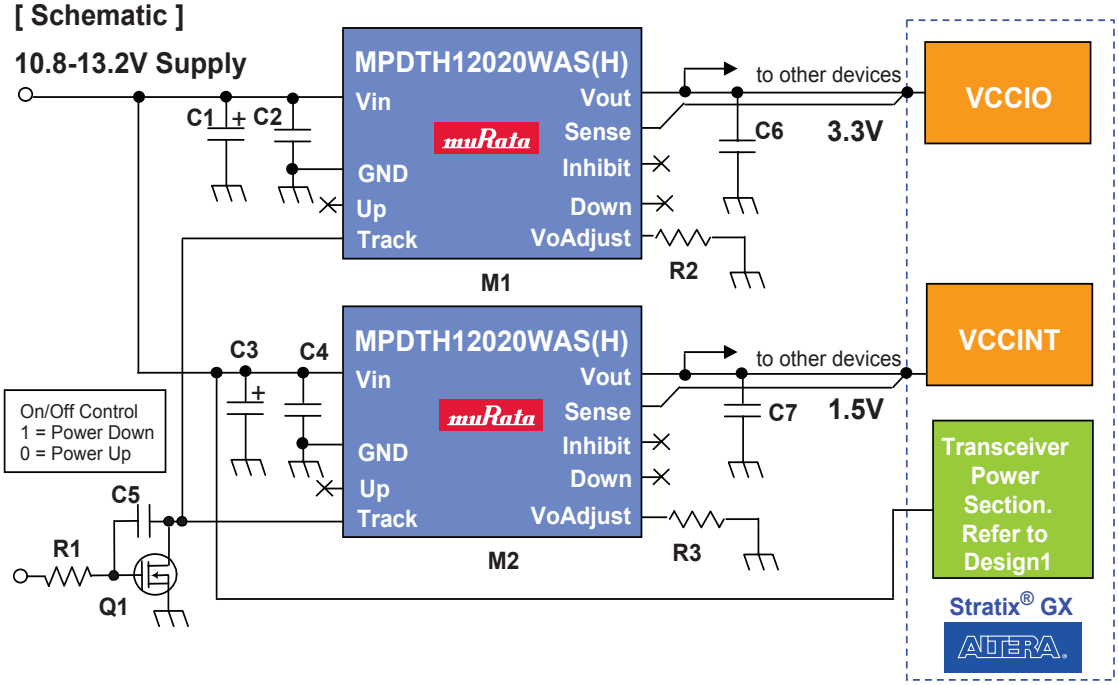

[List of Material]

Reference	Qty	Description	Manufacturer	Part Number
M1,M2	2	18A-out DC-DC converter, SMT	Murata	MPDTH12020WAS
C1,C3	2	Poly-Aluminum, 560uF, 25V	Panasonic	EEUFC1E561S
C2,C4	2	Ceramic, 10uF, 16V, R, 10%	Murata	GRM32DR11C106KA01
C5	1	Ceramic, 0.1uF, 50V, R, 10%	Murata	GRM188R11H104KA93
C6,C7	2	Ceramic, 47uF, 6.3V, B, 20%	Murata	GRM31CB30J476ME18
Q1	1	30V, 100mA	Rohm	2SK3019FTL
R1	1	22 kΩ, 1/16W, 5%	Std	Std
R2	1	2kΩ, 1/16W, 0.5%	Std	Std
R3	1	24.8kΩ, 1/16W, 0.5%	Std	Std

Download data sheets for DC–DC Converters mentioned in this reference guide at www.murata.com/power/fpga/altera

Petitioners
Ex. 1043, p. 36

Stratix® GX FPGA Design 5
12V-Input, 6A Solution

MURATA PRODUCTS RoHS Compliant

[Features]

- Auto-Tracking Feature Makes Sequencing Design Easy
- POLA (Point-of-Load Alliance) Device; MPDTH12050WAS(H) (M1,M2)

[Schematic]

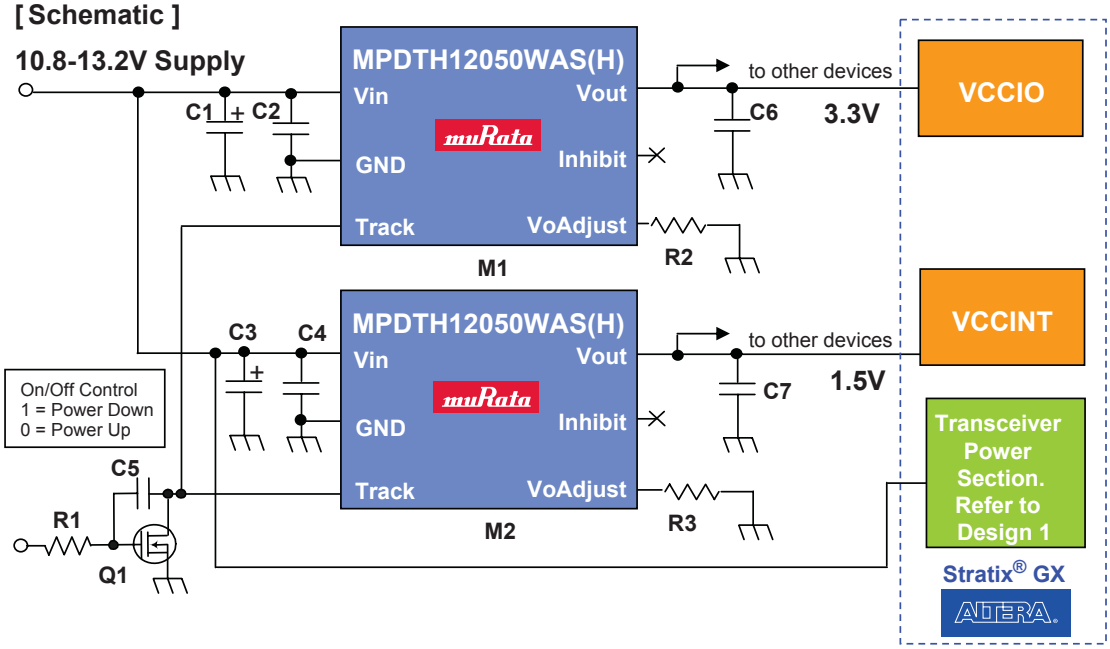

[List of Material]

Reference	Qty	Description	Manufacturer	Part Number
M1,M2	2	6A-out DC-DC converter, SMT	Murata	MPDTH12050WAS
C1,C3	2	Poly-Aluminum, 100uF, 16V	Panasonic	EEFWA1C101P
C2,C4,C6,C7	4	Ceramic, 10uF, 16V, R, 10%	Murata	GRM32DR11C106KA01
C5	1	Ceramic, 0.1uF, 50V, R, 10%	Murata	GRM188R11H104KA93
Q1	1	30V, 100mA	Rohm	2SK3019FTL
R1	1	22 kΩ, 1/16W, 5%	Std	Std
R2	1	2kΩ, 1/16W, 0.5%	Std	Std
R3	1	24.8kΩ, 1/16W, 0.5%	Std	Std

Download data sheets for DC–DC Converters mentioned in this reference guide at www.murata.com/power/fpga/altera

Petitioners
Ex. 1043, p. 37

⚠Note:

1. Export Control
   〈For customers outside Japan〉
   Murata products should not be used or sold for use in the development, production, stockpiling or utilization of any conventional weapons or mass destructive weapons (nuclear weapons, chemical or biological weapons, or missiles), or any other weapons.
   〈For customers in Japan〉
   For products which are controlled items subject to the "Foreign Exchange and Foreign Trade Law" of Japan, the export license specified by the law is required for export.
2. Please contact our sales representatives or product engineers before using the products in this catalog for the applications listed below, which require especially high reliability for the prevention of defects which might directly damage a third party's life, body or property, or when one of our products is intended for use in applications other than those specified in this catalog.
   ①Aircraft equipment ②Aerospace equipment
   ③Undersea equipment ④Power plant equipment
   ⑤Medical equipment ⑥Transportation equipment (vehicles, trains, ships, etc.)
   ⑦Traffic signal equipment ⑧Disaster prevention / crime prevention equipment
   ⑨Data processing equipment ⑩Application of similar complexity and/or reliability requirements to the applications listed above
3. Product specifications are subject to change or our products may be discontinued without advance notice. Please check with our sales representatives or product engineers before ordering.
4. Please read rating and ⚠CAUTION (for storage, operating, rating, soldering, mounting and handling) to prevent smoking and/or burning, etc.
5. Please approve our product specifications or complete the approval sheet for product specifications before ordering.
6. Please note that unless otherwise specified, we shall assume no responsibility whatsoever for any conflict or dispute that may occur in connection with the effect of our and/or a third party's intellectual property rights and other related rights in consideration of your use of our products and/or information described or contained in our catalogs. In this connection, no representation shall be made to the effect that any third parties are authorized to use the rights mentioned above under licenses without our consent.
7. No ozone depleting substances (ODS) under the Montreal Protocol are used in our manufacturing process.
8. For status of ROHS compliance of our products, please consult our website.

Innovator in Electronics

Murata Electronics N.A., Inc.
2200 Lake Park Drive
Smyrna, GA 30080
Phone: 770-436-1300
Fax: 770-436-3030
www.murata.com

For website information on Murata's DC-DC Converter Solutions for Altera FPGAs:
www.murata.com/power/fpga/altera/index.html

Cat.No.DC-03-A 2-08
© 2008 Murata Electronics North America, Inc.