DC-DC Converter Specification(DRAFT)

MPD4S014S

1 . Application
This specification applies to DC-DC Converter for consumer data-processing equipment, MPD4S014S.
For any other application, please contact us before using this product.

2 . Customer Reference
Customer Spec. Number
Customer Part Number

3 . Murata Part Number MPD4S014S

4 . Appearance, Dimensions

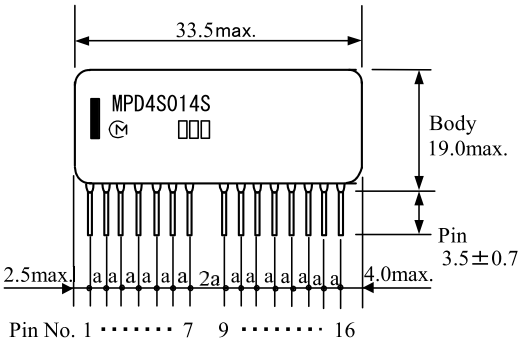

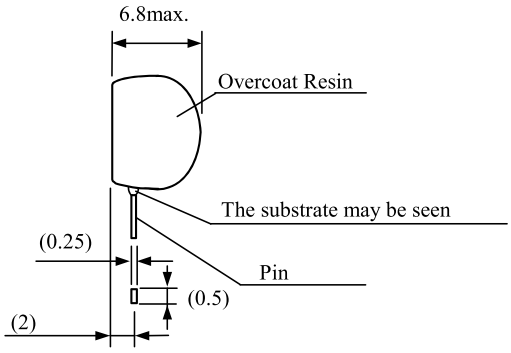

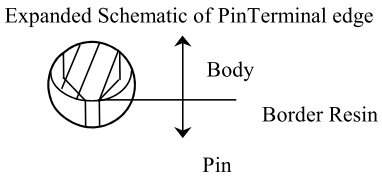

Markings
(1) 1 Pin Marking ▌

(2) Part No. MPD4S014S
(3) MFG ID Ⓜ
(4) Lot No. □□□
(a)(b)(c)
(a) Production Factory
(b) Production Year
(c) Production Month（1,2,3, ---- 9,O,N,D）

⚠ **Note:**

1. This datasheet is downloaded from the website of Murata Manufacturing co., ltd. Therefore, it's specifications are subject to change or our products in it may be discontinued without advance notice. Please check with our sales representatives or product engineers before ordering.
2. This datasheet has only typical specifications because there is no space for detailed specifications. Therefore, please approve our product specifications or transact the approval sheet for product specifications before ordering.

5. Pin Number and Function

Pin No.	Function	Pin No.	Function
1.	Vin	9.	GND
2.	N.C.(Internally Used)	10.	Vout1(1.0V-3.3V)
3.	ON/OFF2	11.	Vout1(1.0V-3.3V)
4.	VAR2	12.	GND
5.	GND	13.	VAR1
6.	Vout2(1.8V-3.6V)	14.	ON/OFF1
7.	Vout3(2.5V)	15.	Vin
		16.	N.C.(Internally Used)

GND terminals and Vin terminals are NOT connected inside of this device. These pins should be connected to one-another externally.
The path between your GND and GND terminals of this device, and your Vin and Vin terminals of this device should be minimized as much as possible on your product's assembly.
N.C.（Pin No.2 and No.16）are utilized internally. These pins should be left open.

6. Block Diagram

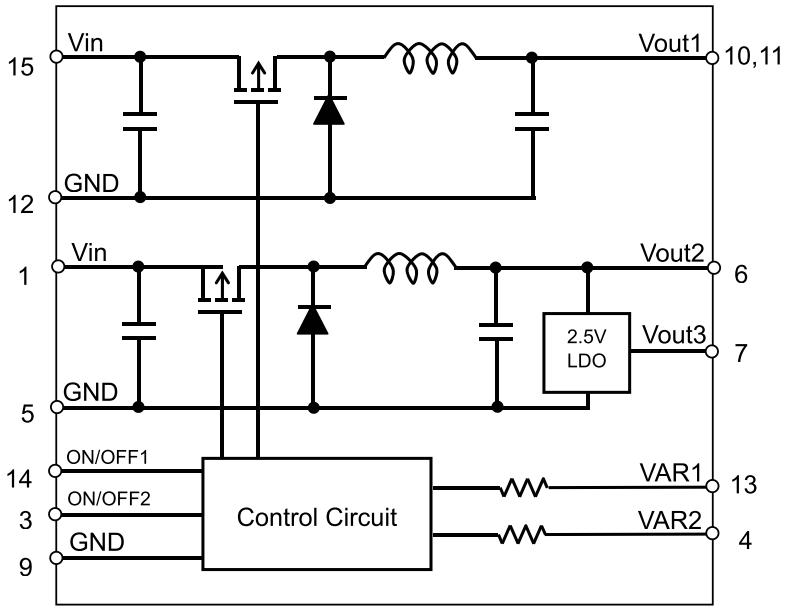

7. Absolute Ratings

7 .1	Input Voltage Range	4.5 to 13.2V
7 .2	ON/OFF Pin Input Voltage Range	-0.3V to Vin+0.3V
7 .3	Operating Ambient Temperature Range	0 to 85°C (Temperature Gradient ≤10°C/H)
7 .4	Storage Temperature Range	-40 to 125°C(Temperature Gradient ≤25°C/H)
7 .5	Operating Humidity Range	20 to 85% (No Condensation)
7 .6	Storage Humidity Range	10 to 90% (No Condensation)
7 .7	Maximum Wet Bulb	39°C

⚠ **Note:**

1. This datasheet is downloaded from the website of Murata Manufacturing co., ltd. Therefore, it's specifications are subject to change or our products in it may be discontinued without advance notice. Please check with our sales representatives or product engineers before ordering.
2. This datasheet has only typical specifications because there is no space for detailed specifications. Therefore, please approve our product specifications or transact the approval sheet for product specifications before ordering.

8. Characteristics

8 .1 Electrical Characteristics (Ta=25 °C)

Item	Symbol	Condition	Value Min.	Value Typ.	Value Max.	Unit
Input Voltage	Vin		4.5	12	13.2	V
Output Voltage Adjustable Range	Vout1	Vin=4.5-13.2V (Vin-Vo>1V)	1.0		3.3	V
	Vout2		1.8		3.6	
Output Voltage Accuracy	Vout1	RVAR1=2.285kΩ±0.5%	+1.15	+1.20	+1.25	V
		RVAR1=10.683kΩ±0.5%	+1.73	+1.80	+1.87	
	Vout2	RVAR2=1.80kΩ±0.5%	+3.20	+3.30	+3.40	
	Vout3	Vo≧2.85V(*1)	+2.375	+2.50	+2.625	
Load Current	Iout1	Vout1=1.0-1.8V	0	-	1.3	A
		Vout1=1.81-3.3V	0	-	1.1	
	Iout2 +Iout3	Current sum of Iout2 and Iout3 (*2)	0	-	1.0	
	Iout3	Vout2≧3.05V	0	-	0.3	
		3.05V>Vout2≧2.95V	0	-	0.25	
		2.95V>Vout2≧2.85V	0	-	0.20	
Continuous Load Current			See thermal derating curve in section 8.2			A
Ripple Voltage	Vrip1	Vin=12V, Iout3=0.3A Vout1=1.2V, Iout1=1.3A, Vout2=3.3V, Iout2=0.7A BW=20MHz, Cout=1μF	-	50	-	mV(p-p)
	Vrip2		-	50	-	
Efficiency	EFF	Vin=12V, Iout3=0.3A Vout1=1.2V, Iout1=1.3A, Vout2=3.3V, Iout2=0.7A	-	75	-	%
Remote ON/OFF	ON/OFF1 ON/OFF2	Vin=4.5-13.2V, ON	+2.5	-	Vin	V
		Vin=4.5-13.2V, OFF	0	-	+0.5	
Frequency	Freq.		-	500	-	kHz
External Output Capacitor	Cout	MLCC (ESR≦50mΩ)	0	1	47	μF
		Electrolytic, Polymer (ESR>50mΩ)	0	47	470	μF
Protection Circuit	SCP	Short circuit protection monitors output voltage. If the output voltage isn't regulated over 8msec (typ), the protection circuit assumes the output is shorted to GND and will shut down the DC-DC converter. This protection won't work as an over current protection, so the current limit of input power supply should be under 5A in order to avoid damage to this device. After correction of the abnormal condition, the DC-DC converter will restart by re-applying Vin or toggling ON/OFF pin.				

Note (1) Vout3 is powered from Vout2 via an LDO inside of this converter. Consequently Vout2 must be 2.85V or more to achieve 2.5V at the Vout3 terminal. If Vout2 < 2.85V, Vout3 will be about 0.3V lower than Vout2.

(2) Vout3 is powered from Vout2 via an LDO inside of the converter. As a result the current that can be sourced from the Vout2 terminal is dependent on Iout3. Please note that the Iout2 limit decreases as Iout3 increases, and vice versa.

⚠ **Note:**

1. This datasheet is downloaded from the website of Murata Manufacturing co., ltd. Therefore, it's specifications are subject to change or our products in it may be discontinued without advance notice. Please check with our sales representatives or product engineers before ordering.
2. This datasheet has only typical specifications because there is no space for detailed specifications. Therefore, please approve our product specifications or transact the approval sheet for product specifications before ordering.

8 .2 Thermal Derating

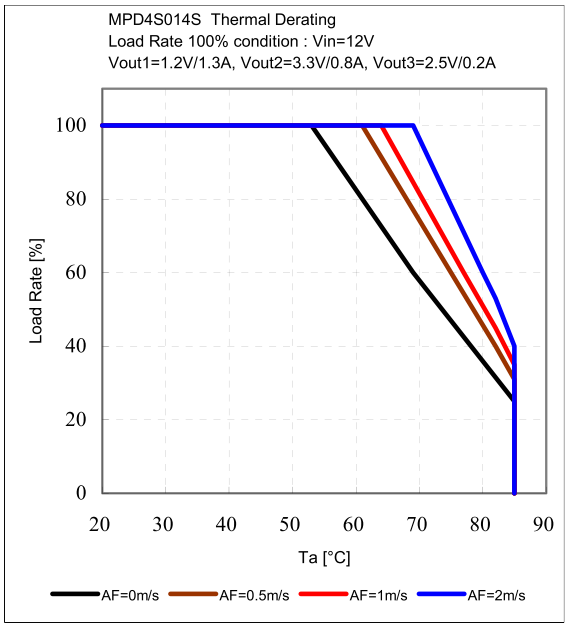

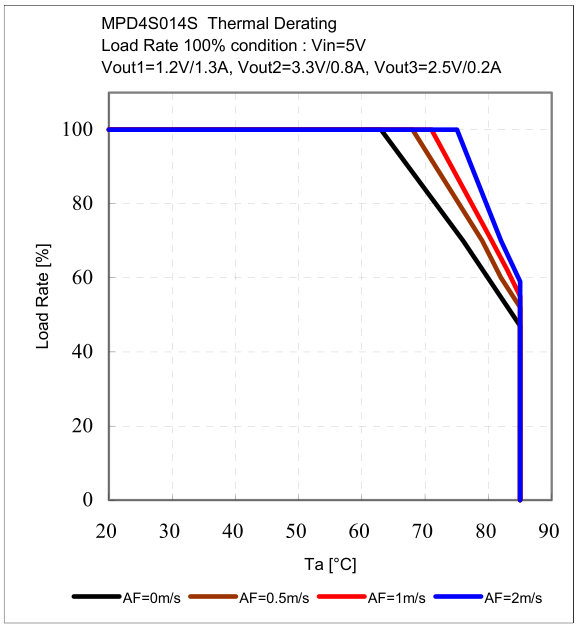

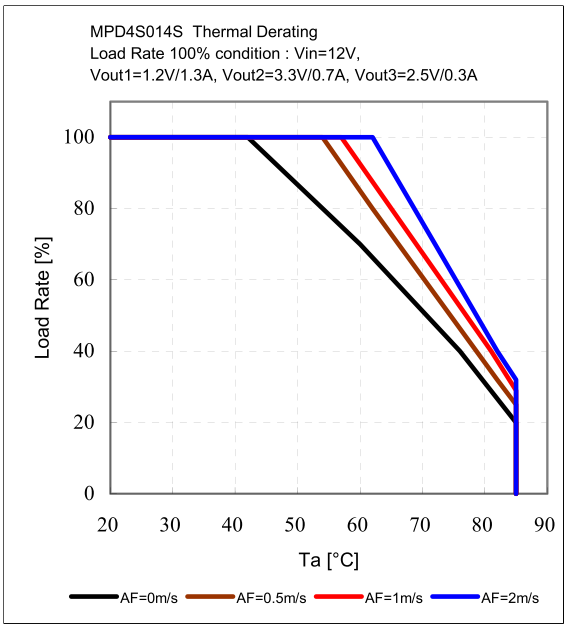

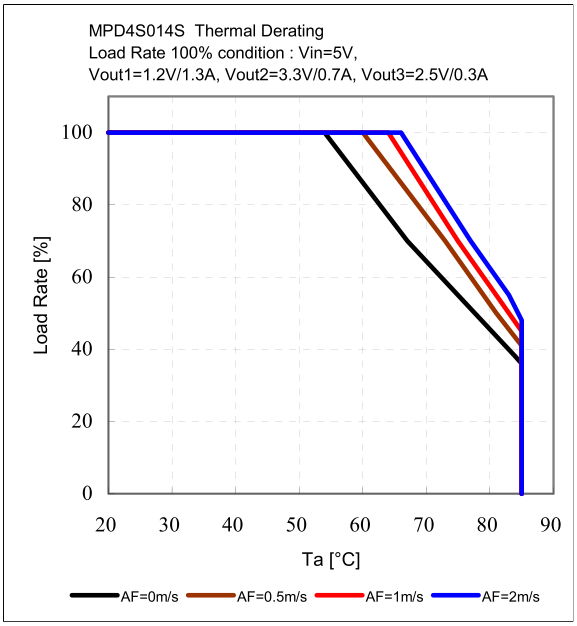

The above thermal derating should be considered a reference only due to dependencies on a variety of conditions such as PCB layout design, output voltage settings, current balance between each output, high temperature exposure from adjacent parts, etc. For reliable operation, please ensure that the surface temperature of this product is maintained below 100°C.

⚠ **Note:**

1. This datasheet is downloaded from the website of Murata Manufacturing co., ltd. Therefore, it's specifications are subject to change or our products in it may be discontinued without advance notice. Please check with our sales representatives or product engineers before ordering.
2. This datasheet has only typical specifications because there is no space for detailed specifications. Therefore, please approve our product specifications or transact the approval sheet for product specifications before ordering.

9. Output Voltage Trimming (Adjustment)

The output voltage of Vout1 and Vout2 can be adjusted by connecting a resistor between each VAR-pin (Pins 4 & 13) to a GND-pin (Pin 9 is recommended for the most accurate Vout setting).
The following equation gives the required external-resistance value to adjust the output voltage to the required Vout.

< Output Voltage Calc.>

$$RVAR1 = \frac{24}{\frac{5.782}{Vout1} - 1.7273} - 5.479 \quad [\mathrm{k}\Omega]$$

$$RVAR2 = \frac{15}{Vout2 - 1.8} - 8.197 \quad [\mathrm{k}\Omega]$$

< RVAR Calculation Example >

Vout1[V]	Calculated RVAR1[Ω]	Applied RVAR1 (example) [Ω]
1.0	440	390+47
1.2	2285	2.2k+82
1.5	5803	5.6k+200
1.8	10683	10k+680
2.5	35512	33k+2.4k
3.0	114501	110k+4.7k
3.3	961436	1M

Vout2[V]	Calculated RVAR2[Ω]	Applied RVAR2 (example) [Ω]
1.8	∞	open
2.0	66803	62k+4.7k
2.5	13232	13k+240
3.0	4303	4.3k
3.3	1803	1.8k
3.6	136	130

⚠ **Note:**

1. This datasheet is downloaded from the website of Murata Manufacturing co., ltd. Therefore, it' s specifications are subject to change or our products in it may be discontinued without advance notice. Please check with our sales representatives or product engineers before ordering.
2. This datasheet has only typical specifications because there is no space for detailed specifications. Therefore, please approve our product specifications or transact the approval sheet for product specifications before ordering.

10. Reliability

10.1 Humidity

According to JIS-C-0022.

40±2°C, 90 to 95%RH, 100 hours. Leave for 4 hours at room temperature.

Result: No apparent damage and no deviation from electrical characteristics (Section 8).

10.2 Temperature Cycles

Repeat cycle 5 times. Leave 2 hours at room temp.
Result: No apparent damage and no deviation from electrical characteristics (Section 8).

Step	Condition	Time
1	-40°C±3°C	30 minutes
2	Room Temp.	5-10 minutes
3	+85°C±2°C	30 minutes
4	Room Temp.	5-10 minutes

10.3 Vibration

10 to 55Hz, 1.5mm amplitude (1minute cycle), 1 hour for each of X, Y, Z directions.

Result: No apparent damage and no deviation from electrical characteristics (Section 8).

10.4 Mechanical Shock

20G, 1 time for each X, Y, Z directions.

Result: No apparent damage and no deviation from electrical characteristics (Section 8).

⚠ **Note:**

1. This datasheet is downloaded from the website of Murata Manufacturing co., ltd. Therefore, it' s specifications are subject to change or our products in it may be discontinued without advance notice. Please check with our sales representatives or product engineers before ordering.
2. This datasheet has only typical specifications because there is no space for detailed specifications. Therefore, please approve our product specifications or transact the approval sheet for product specifications before ordering.

11. Test Circuit

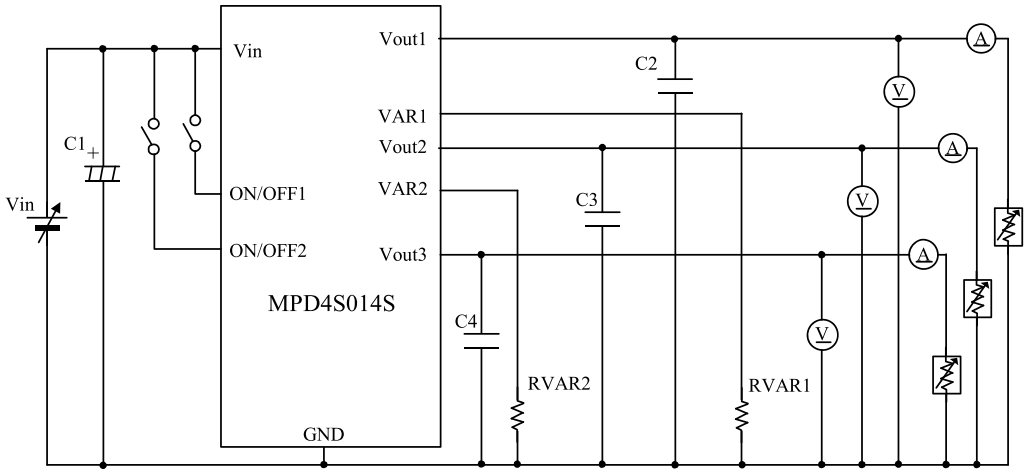

V A	Digital Multi meter	HP34401A equivalent	(Agilent Technologies)
Vr	: Ripple Voltmeter	RM－101 equivalent	(Keisokugiken)
RL	: Electronic Load Device	EUL－150 α XL equivalent	(Fujitsu access)
	: DC Power Supply	HP6621A equivalent	(Agilent Technologies)

C1 : Low Impedance Aluminum Electrolytic Capacitor 220μF/16V (ZL series : Rubycon)
C2,C3,C4 : Ceramic Capacitor 1μF/10V/X7R（GRM188R71A105KA61: MURATA）
RVAR1,RVAR2 : Chip Resistor ±0.5%, 1/16W

Ripple Noise Measurement Circuit

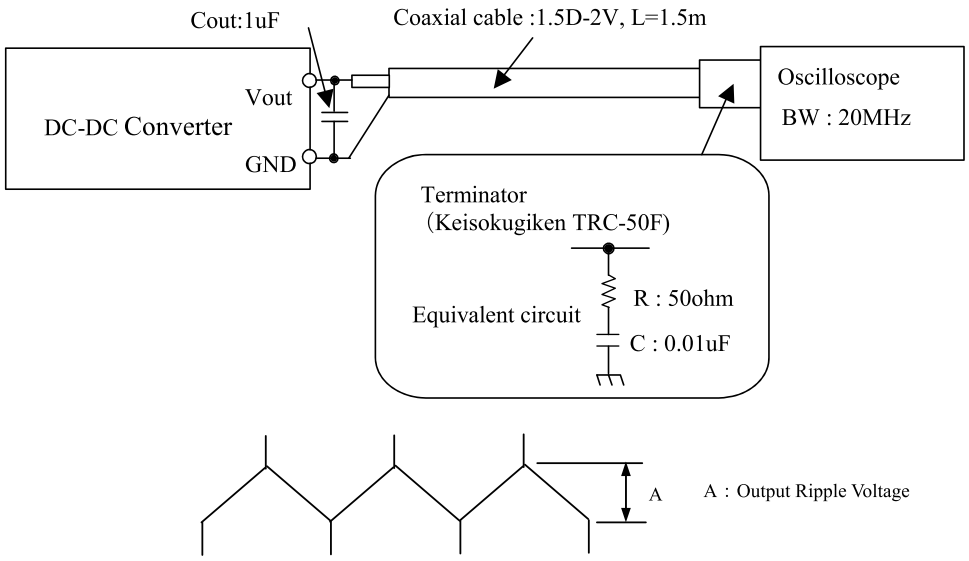

⚠ **Note:**

1. This datasheet is downloaded from the website of Murata Manufacturing co., ltd. Therefore, it' s specifications are subject to change or our products in it may be discontinued without advance notice. Please check with our sales representatives or product engineers before ordering.
2. This datasheet has only typical specifications because there is no space for detailed specifications. Therefore, please approve our product specifications or transact the approval sheet for product specifications before ordering.

12. Packaging Information

①The products are put on the conductive mat in a row as below. (6lines×5columns .)

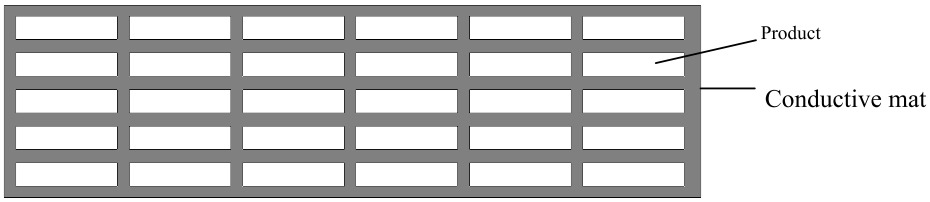

②Pile and pack the 3 above–mentioned units at maximum.

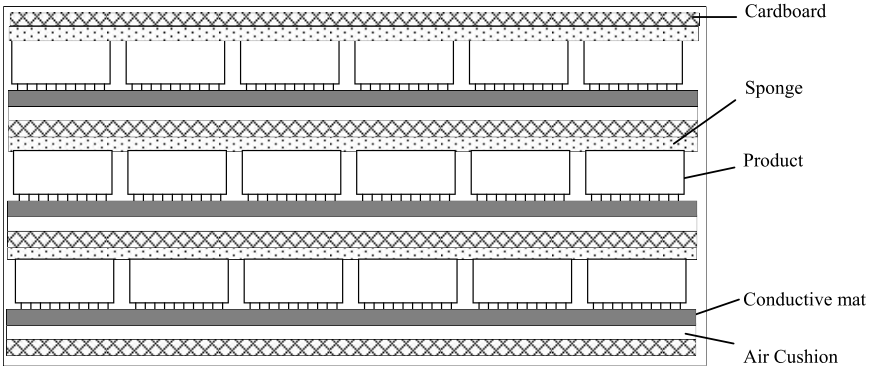

Item	Specification
Packaging form typical classification	Box
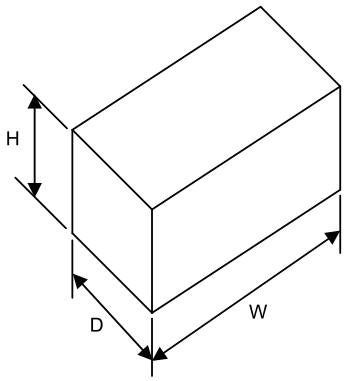 Dimensions of packaging form (typ.)	W = 245 (mm) D = 78 (mm) H = 104 (mm)
The number of products in packaging form	90 pcs
Mass of one product	4 g (typ)
Remark *The number of the product in one box may be less than 90, if needed. *On the packing box, the following is indicated. Murata Part No. Quantity Inspection No.	

⚠ **Note:**

1. This datasheet is downloaded from the website of Murata Manufacturing co., ltd. Therefore, it' s specifications are subject to change or our products in it may be discontinued without advance notice. Please check with our sales representatives or product engineers before ordering.
2. This datasheet has only typical specifications because there is no space for detailed specifications. Therefore, please approve our product specifications or transact the approval sheet for product specifications before ordering.

13. Manufacturing Facilities
Komatsu Murata Mfg.Co.,Ltd.
Kanazu Murata Mfg.Co.,Ltd.
Wakura Murata Mfg.Co.,Ltd.

14. ⚠ Operational Notes

14.1 Be sure to provide an appropriate fail-safe function on your product to prevent secondary damage that may be caused due to abnormal functional or failure of this product.

14.2 Inrush current protection is not a feature of this product.

14.3 Please connect the input terminals with the correct polarity. If an error in connection polarity is made this product may be damaged. If this product is damaged internally, an elevated input current may flow, and so this product may exhibit an abnormal temperature rise, or your product may be damaged. It is recommended that a diode and fuse (per the following diagram) be added for protection.

Fuse Current Rating Standard: 5A

※ Please select diode and fuse after confirming the operation of your product.

14.4 Limitation of Application

Please contact us before using this product for the applications listed below which require especially high reliability for the prevention of defects, which might directly cause damage to the third party's life, body or property.

①Aircraft Equipment
②Aerospace Equipment
③Undersea Equipment
④Power Plant Control Equipment
⑤Medical Equipment
⑥Transportation Equipment (vehicles, trains, ships, etc.)
⑦Traffic Signal Equipment
⑧Disaster prevention /crime prevention equipment
⑨Any other application of similar complexity and/or reliability requirements to the applications listed above.

⚠ **Note:**

1. This datasheet is downloaded from the website of Murata Manufacturing co., ltd. Therefore, it' s specifications are subject to change or our products in it may be discontinued without advance notice. Please check with our sales representatives or product engineers before ordering.
2. This datasheet has only typical specifications because there is no space for detailed specifications. Therefore, please approve our product specifications or transact the approval sheet for product specifications before ordering.

15. Notice

15. 1 Soldering

15.1.1 Flux

Please solder this product with Rosin Flux that contains of 0.2wt% or less chlorine.
Please do not use high activity acid flux or water-soluble flux as they may reduce the reliability of this product.

15.1.2 Solder

15.1.2.1 Lead Free Solder

Please use the solder Sn-3Ag-0.5Cu.

15.1.2.2 Eutectic Solder

Please use the solder H60, H63 (in JIS Z 3282) or equivalent.

15.1.3 Soldering Conditions

15.1.3.1 Lead Free Solder

Please solder under the following conditions.

Flow Soldering Preheating	: 120±10℃ 60-120 seconds
Soldering	: 260±5℃
Time within	: 10 seconds
Soldering Iron Condition	: Less than 350℃, 5 seconds maximum (Soldering iron of less than 30W should be used.)

15.1.3.2 Eutectic Solder

Please solder under the following conditions.

Flow Soldering Preheating	: 120±10℃ 60-120 seconds
Soldering	: 230±5℃
Time within	: 5 seconds
Soldering Iron Condition	: Less than 300℃, 3 seconds maximum (Soldering iron of less than 30W should be used.)

15.2 Cleaning

Please do not wash this product.

15. 3 Storage

15.3.1 Please avoid dampness and heat or locations where temperatures may vary widely to avoid possible water condensation on the product. Exposure to such environments may degrade the performance and/or the reliability of the product.
If the product must be stored for longer than 6 months it is recommend that solderability be tested regularly to confirm material degradation has not occurred.

15.3.2 Please do not store this product in places such as :
A dusty location, a place exposed directly to sea breeze, or in an atmosphere containing corrosive gas (Cl2,NH3,SO2,NOX and so on).

15. 4 Operational Environment and Operational Conditions

15.4.1 Operational Environment

This product is not water-, chemical- or corrosion-proof.
In order to prevent leakage of electricity and an abnormal temperature rise of the device, do not operate under the following environmental conditions:

(1) In an atmosphere containing corrosive gas (Cl2, NH3, SO2, NOX and so on)
(2) In a high-dust environment
(3) Under the exposure of direct sunlight
(4) In a location where the likelihood of exposure to water or water condensation exists.
(5) In a location exposed to ocean air
(6) In any locations similar to the above

15.4.2 Operational Conditions

Please use this product within specified values (power supply, temperature, input, output and load condition, and so on). If the product is exposed to conditions outside of the specified values reliability of the product may be adversely effected.

⚠ **Note:**

1. This datasheet is downloaded from the website of Murata Manufacturing co., ltd. Therefore, it' s specifications are subject to change or our products in it may be discontinued without advance notice. Please check with our sales representatives or product engineers before ordering.
2. This datasheet has only typical specifications because there is no space for detailed specifications. Therefore, please approve our product specifications or transact the approval sheet for product specifications before ordering.

15.4.3 Note prior to use

Diminished reliability and/ or failure may result if the product is exposed to a high-level static charge, over-rated voltage or reverse voltage. Please avoid the following conditions be avoided prior to use of the product:

(1) Supply of power outside of rated values (see section 7)
(2) Supply of reverse power or inadequate connection of a 0 V(DC)line
(3) Electrostatic discharge from production line and/ or operator
(4) Electrification of the product from electrostatic induction
(5) Excessive mechanical shock

15.5 Transportation

Murata recommends that when transporting this product, it be packed so as to avoid damage by mechanical vibration or exposure to adverse conditions such as ocean air, high humidity. It is additionally recommended that appropriate instructions and guidelines be communicated to carriers to prevent exposure to these same conditions.

16.⚠ Note

1. Murata recommends that customers ensure that the evaluation and testing of these devices are completed with this product actually assembled on their product.

2. All the items and parameters in this product specification have been prescribed on the premise that Murata's product is used for the purpose, under the condition and in the environment mutually agreed upon.

This document is for reference only and subject to revision without prior of subsequent notice. Please contact Murata for latest documentation.

⚠ **Note:**

1. This datasheet is downloaded from the website of Murata Manufacturing co., ltd. Therefore, it' s specifications are subject to change or our products in it may be discontinued without advance notice. Please check with our sales representatives or product engineers before ordering.
2. This datasheet has only typical specifications because there is no space for detailed specifications. Therefore, please approve our product specifications or transact the approval sheet for product specifications before ordering.