US011016918B2

(12) **United States Patent**
Chen et al.

(10) **Patent No.: US 11,016,918 B2**
(45) **Date of Patent: May 25, 2021**

(54) **FLASH-DRAM HYBRID MEMORY MODULE**

(71) Applicant: **Netlist, Inc.**, Irvine, CA (US)

(72) Inventors: **Chi-She Chen**, Walnut, CA (US); **Jeffrey C. Solomon**, Irvine, CA (US); **Scott H. Milton**, Irvine, CA (US); **Jayesh Bhakta**, Cerritos, CA (US)

(73) Assignee: **Netlist, Inc.**, Irvine, CA (US)

(*) Notice: Subject to any disclaimer, the term of this patent is extended or adjusted under 35 U.S.C. 154(b) by 0 days.

(21) Appl. No.: **17/138,766**

(22) Filed: **Dec. 30, 2020**

(65) **Prior Publication Data**

US 2021/0124701 A1 Apr. 29, 2021

Related U.S. Application Data

(63) Continuation of application No. 15/934,416, filed on Mar. 23, 2018, which is a continuation of application
(Continued)

(51) **Int. Cl.**
G06F 13/36 (2006.01)
G06F 13/28 (2006.01)
(Continued)

(52) **U.S. Cl.**
CPC ***G06F 13/28*** (2013.01); ***G06F 1/185*** (2013.01); ***G06F 3/0613*** (2013.01);
(Continued)

(58) **Field of Classification Search**
CPC .. G06F 13/28; G06F 13/4027; G06F 13/1694; G06F 13/4223; G06F 12/0638;
(Continued)

(56) **References Cited**

U.S. PATENT DOCUMENTS

2,043,099 A 6/1936 Hanna
3,562,555 A 2/1971 Ahrons
(Continued)

FOREIGN PATENT DOCUMENTS

EP 2737383 A2 6/2014
KR 0130873 B1 4/1999
(Continued)

OTHER PUBLICATIONS

Exhibit, Decision Denying Institution of Inter Partes Review, *Smart Modular Technologies, Inc.* v. *Netlist, Inc.*, Case No. 4:13-cv-05889-YGR Document 309-3, filed Mar. 17, 2015, 23 pages.
(Continued)

Primary Examiner — Hashem Farrokh
(74) *Attorney, Agent, or Firm* — Shami Messinger PLLC

(57) **ABSTRACT**

In certain embodiments, a memory module includes a printed circuit board (PCB) having an interface that couples it to a host system for provision of power, data, address and control signals. First, second, and third buck converters receive a pre-regulated input voltage and produce first, second and third regulated voltages. A converter circuit reduces the pre-regulated input voltage to provide a fourth regulated voltage. Synchronous dynamic random access memory (SDRAM) devices are coupled to one or more regulated voltages of the first, second, third and fourth regulated voltages, and a voltage monitor circuit monitors an input voltage and produces a signal in response to the input voltage having a voltage amplitude that is greater than a threshold voltage.

30 Claims, 22 Drawing Sheets

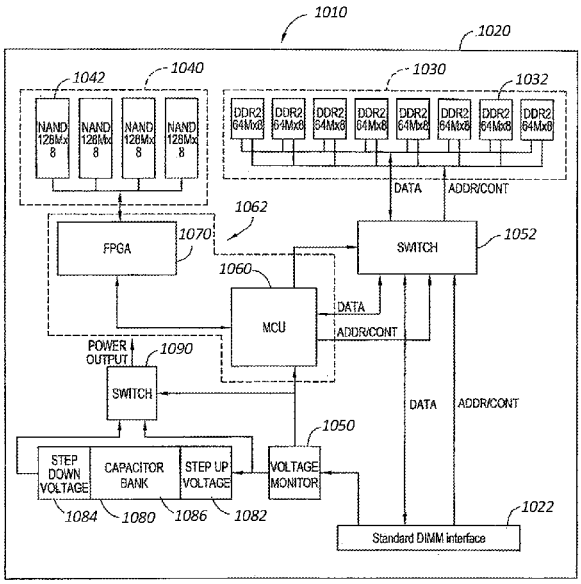

Related U.S. Application Data

No. 14/840,865, filed on Aug. 31, 2015, now Pat. No. 9,928,186, which is a continuation of application No. 14/489,269, filed on Sep. 17, 2014, now Pat. No. 9,158,684, which is a continuation of application No. 13/559,476, filed on Jul. 26, 2012, now Pat. No. 8,874,831, which is a continuation-in-part of application No. 12/240,916, filed on Sep. 29, 2008, now Pat. No. 8,301,833, which is a continuation of application No. 12/131,873, filed on Jun. 2, 2008, now abandoned.

(60) Provisional application No. 60/941,586, filed on Jun. 1, 2007, provisional application No. 61/512,871, filed on Jul. 28, 2011.

(51) **Int. Cl.**

G06F 12/02	(2006.01)
G06F 13/16	(2006.01)
G06F 1/18	(2006.01)
G06F 12/06	(2006.01)
G06F 13/42	(2006.01)
G11C 7/10	(2006.01)
G11C 14/00	(2006.01)
G06F 3/06	(2006.01)
G06F 13/40	(2006.01)

(52) **U.S. Cl.**

CPC ***G06F 3/0659*** (2013.01); ***G06F 3/0685*** (2013.01); ***G06F 12/0246*** (2013.01); ***G06F 12/0638*** (2013.01); ***G06F 13/1694*** (2013.01); ***G06F 13/4027*** (2013.01); ***G06F 13/4243*** (2013.01); ***G11C 7/1072*** (2013.01); ***G11C 14/0018*** (2013.01); *G06F 2212/205* (2013.01); *G06F 2212/7208* (2013.01)

(58) **Field of Classification Search**

CPC G06F 12/0246; G06F 1/185; G06F 3/0613; G06F 3/0685; G06F 3/0659; G06F 2212/7208; G06F 2212/205; G11C 7/1072; G11C 14/0018

USPC 711/103, 104, 105; 710/138

See application file for complete search history.

(56) **References Cited**

U.S. PATENT DOCUMENTS

3,916,390	A	10/1975	Chang et al.
4,234,920	A	11/1980	Ness et al.
4,420,821	A	12/1983	Hoffman
4,449,205	A	5/1984	Hoffman
4,607,332	A	8/1986	Goldberg
4,658,204	A	4/1987	Goodwin
4,882,709	A	11/1989	Wyland
4,884,242	A	11/1989	Lacy et al.
4,965,828	A	10/1990	Ergott, Jr. et al.
5,430,742	A	7/1995	Jeddeloh et al.
5,444,664	A	8/1995	Kuroda et al.
5,490,155	A	2/1996	Abdoo et al.
5,519,663	A	5/1996	Harper, Jr. et al.
5,519,831	A	5/1996	Holzhammer
5,563,839	A	10/1996	Herdt et al.
5,577,213	A	11/1996	Avery et al.
5,619,644	A	4/1997	Crockett et al.
5,630,096	A	5/1997	Zuravleff et al.
5,675,725	A	10/1997	Malcolm
5,757,712	A	5/1998	Nagel et al.
5,799,200	A	8/1998	Brant et al.
5,813,029	A	9/1998	Klein
5,870,350	A	2/1999	Bertin et al.
5,874,995	A	2/1999	Naimpally et al.
5,890,192	A	3/1999	Lee et al.
5,953,215	A	9/1999	Karabatsos
5,991,885	A	11/1999	Chang et al.
6,023,421	A	2/2000	Iadanza et al.
6,026,465	A	2/2000	Mills et al.
6,065,092	A	5/2000	Roy
6,112,310	A	8/2000	Jun et al.
6,145,068	A	11/2000	Lewis
6,158,015	A	12/2000	Klein
6,199,142	B1	3/2001	Saulsbury et al.
6,216,247	B1	4/2001	Creta et al.
6,269,382	B1	7/2001	Cabrera et al.
6,336,174	B1	1/2002	Li et al.
6,336,176	B1	1/2002	Leyda et al.
6,363,450	B1	3/2002	Lash et al.
6,421,279	B1	7/2002	Tobita et al.
6,459,647	B1	10/2002	Kengeri
6,487,102	B1	11/2002	Halbert et al.
6,487,623	B1	11/2002	Emerson et al.
6,571,244	B1	5/2003	Larson
6,614,685	B2	9/2003	Wong
6,658,507	B1	12/2003	Chan
6,691,209	B1	2/2004	O'connell
6,693,840	B2	2/2004	Shimada et al.
6,721,212	B2	4/2004	Sasaki
6,721,860	B2	4/2004	Klein
6,769,081	B1	7/2004	Parulkar
6,799,241	B2	9/2004	Kahn et al.
6,799,244	B2	9/2004	Tanaka et al.
6,810,513	B1	10/2004	Vest
6,816,982	B2	11/2004	Ravid
6,839,774	B1	1/2005	Ahn et al.
6,910,635	B1	6/2005	Miks et al.
6,944,042	B2	9/2005	Komatsuzaki
6,948,029	B2	9/2005	Yano
6,952,368	B2	10/2005	Miura et al.
7,053,470	B1	5/2006	Sellers et al.
7,062,618	B2	6/2006	Tsunoda et al.
7,089,412	B2	8/2006	Chen
7,102,391	B1	9/2006	Sun et al.
7,107,480	B1	9/2006	Moshayedi et al.
7,111,142	B2	9/2006	Spencer et al.
7,136,978	B2	11/2006	Miura et al.
7,155,627	B2	12/2006	Matsui
7,200,021	B2	4/2007	Raghuram
7,234,099	B2	6/2007	Gower et al.
7,353,325	B2	4/2008	Lofgren et al.
7,409,491	B2	8/2008	Doblar et al.
7,409,590	B2	8/2008	Moshayedi et al.
7,411,859	B2	8/2008	Sohn et al.
7,421,552	B2	9/2008	Long
7,467,251	B2	12/2008	Park et al.
7,519,754	B2	4/2009	Wang et al.
7,600,142	B2	10/2009	Ichikawa
7,613,877	B2	11/2009	Shimozono et al.
7,716,411	B2	5/2010	Panabaker et al.
7,818,488	B2	10/2010	Park et al.
7,873,750	B2	1/2011	Yabuta et al.
7,881,150	B2	2/2011	Solomon et al.
7,952,179	B2	5/2011	Chiu et al.
8,001,434	B1	8/2011	Lee et al.
8,081,536	B1	12/2011	Solomon et al.
8,086,955	B2	12/2011	Zhou et al.
8,102,614	B2	1/2012	Song et al.
8,214,616	B2	7/2012	Ware et al.
8,233,303	B2	7/2012	Best et al.
8,301,833	B1	10/2012	Chen et al.
8,407,395	B2	3/2013	Kim et al.
8,412,879	B2	4/2013	Chang et al.
8,516,187	B2	8/2013	Chen et al.
8,671,243	B2	3/2014	Chen et al.
8,677,060	B2	3/2014	Chen et al.
8,874,831	B2	10/2014	Lee et al.
8,880,791	B2	11/2014	Chen et al.
8,904,098	B2	12/2014	Amidi et al.
8,904,099	B2	12/2014	Chen et al.
9,043,677	B2	5/2015	Kong et al.
9,158,684	B2	10/2015	Lee et al.
9,361,250	B2	6/2016	Shan et al.

(56) **References Cited**

U.S. PATENT DOCUMENTS

9,436,600	B2	9/2016	Lee	
9,921,762	B2	3/2018	Amidi et al.	
9,928,186	B2	3/2018	Lee et al.	
2002/0053944	A1	5/2002	Brass et al.	
2002/0083368	A1	6/2002	Abe et al.	
2002/0199061	A1	12/2002	Friedman et al.	
2003/0028733	A1	2/2003	Tsunoda et al.	
2003/0076726	A1	4/2003	Cowles et al.	
2003/0137881	A1	7/2003	Sasaki	
2003/0147297	A1	8/2003	Shiota et al.	
2003/0158995	A1	8/2003	Lee et al.	
2003/0204776	A1	10/2003	Testin	
2003/0206478	A1	11/2003	Ayukawa et al.	
2003/0210601	A1	11/2003	Lin et al.	
2004/0088508	A1	5/2004	Ballard et al.	
2004/0163027	A1	8/2004	MacLaren et al.	
2004/0190210	A1	9/2004	Leete	
2005/0044302	A1	2/2005	Pauley et al.	
2005/0060488	A1	3/2005	Poechmueller	
2005/0132250	A1	6/2005	Hansen et al.	
2005/0141273	A1	6/2005	Park et al.	
2005/0144418	A1	6/2005	Kita	
2005/0183472	A1	8/2005	Choi	
2005/0204091	A1	9/2005	Kilbuck et al.	
2005/0249011	A1	11/2005	Maeda	
2005/0273548	A1	12/2005	Roohparvar	
2006/0039197	A1	2/2006	Khouri et al.	
2006/0069896	A1	3/2006	Sanders	
2006/0080515	A1	4/2006	Spiers et al.	
2006/0126369	A1	6/2006	Raghuram	
2006/0212651	A1	9/2006	Ashmore	
2006/0294295	A1	12/2006	Fukuzo	
2007/0070669	A1	3/2007	Tsern	
2007/0136523	A1*	6/2007	Bonella	G06F 9/4401 711/113
2007/0147115	A1	6/2007	Lin et al.	
2007/0192627	A1	8/2007	Oshikiri	
2007/0255898	A1	11/2007	Nishide et al.	
2007/0276995	A1	11/2007	Caulkins et al.	
2007/0288683	A1	12/2007	Panabaker et al.	
2008/0104344	A1	5/2008	Shimozono et al.	
2008/0126624	A1*	5/2008	Prete	G11C 7/106 710/53
2008/0126690	A1	5/2008	Rajan et al.	
2008/0147968	A1	6/2008	Lee et al.	
2008/0189479	A1	8/2008	Cope et al.	
2008/0195806	A1	8/2008	Cope	
2008/0235443	A1	9/2008	Chow et al.	
2008/0291727	A1	11/2008	Seo et al.	
2009/0031099	A1	1/2009	Sartore	
2009/0235038	A1	9/2009	Sartore	
2010/0110748	A1	5/2010	Best	
2010/0122200	A1	5/2010	Merry, Jr. et al.	
2010/0274953	A1	10/2010	Lee et al.	
2010/0322020	A1	12/2010	Kim	
2011/0078496	A1	3/2011	Jeddeloh	
2011/0161569	A1	6/2011	Shan et al.	
2011/0320804	A1	12/2011	Chan et al.	
2012/0110417	A1	5/2012	Abreu et al.	
2012/0117402	A1	5/2012	Machnicki et al.	
2012/0204079	A1	8/2012	Takefman et al.	
2012/0265952	A1	10/2012	Kurita	
2012/0271990	A1*	10/2012	Chen	G06F 12/00 711/103
2012/0317433	A1	12/2012	Ellis et al.	
2013/0019076	A1	1/2013	Amidi et al.	
2013/0086309	A1	4/2013	Lee et al.	
2013/0254456	A1	9/2013	Chen et al.	
2013/0254497	A1	9/2013	Chen et al.	
2014/0032820	A1	1/2014	Harasawa et al.	
2014/0059170	A1	2/2014	Gasparakis et al.	
2014/0156919	A1	6/2014	Chen et al.	
2014/0156920	A1	6/2014	Chen et al.	
2015/0058701	A1	2/2015	Xing et al.	

FOREIGN PATENT DOCUMENTS

KR	100606242	B1	7/2006
WO	2013016723	A2	1/2013

OTHER PUBLICATIONS

Exhibit, Decision Denying Institution of Inter Partes Review, *Smart Modular Technologies, Inc.* v. *Netlist, Inc.*, Case No. 4:13-cv-05889-YGR Document 309-4, filed Mar. 17, 2015, 20 pages.

Exhibit, Decision Denying Institution of Inter Partes Review, *Smart Modular Technologies, Inc.* v. *Netlist, Inc.*, Case No. 4:13-cv-05889-YGR Document 309-5, filed Mar. 17, 2015, 28 pages.

Exhibit, Decision Denying Institution of Inter Partes Review, *Smart Modular Technologies, Inc.* v. *Netlist, Inc.*, Case No. 4:13-cv-05889-YGR Document 309-9, filed Mar. 17, 2015,17 pages.

Exhibit, Institution of Inter Partes Review, *Sandisk Corporation* v. *Netlist, Inc.*, Case 4:13-cv-05889-YGR Document 316-9, filed Mar. 24, 2015, 29 pages.

Exhibit, Institution of Inter Partes Review, *Smart Modular Technologies, Inc.* v. *Netlist, Inc.*, Case 4:13-cv-05889-YGR Document 309-1, filed Mar. 17, 2015, 22 pages.

JEDEC Standard, Double Data Rate (DDR) SDRAM Specification, JESD79, Jun. 2000, 77 pages.

Exhibit, Letter sent via email on Dec. 6, 2013, Case 4:13-cv-03901-YGR Document 53-2, filed Jan. 6, 2014.

Exhibit, Order Denying Defendant's Motion to Stay Pending Inter Partes Review (Doc.59), *The Procter and Gamble Company* v. *Team Technologies, Inc, et al.*, Case 4:13-cv-05889-YGR Document 316-6, filed Mar. 24, 2015, 10 pages.

Exhibit, Patent Public Advisory Committee Quarterly Meeting, Appeals Statistics USPTO, Case No. 4:13-cv-05889-YGR Document 309-8, filed Mar. 17, 2015, 23 pages.

Exhibit, Reporter's Transcript of Proceedings, *Netlist, Inc* v. *Smart Modular Technologies, Inc., et al.*, Case 4:13-cv-05889-YGR Document 316-3, filed Mar. 24, 2015, 15 pages.

Exhibit, Transcript of Official Electronic Sound Recording Proceeding, *Netlist* v. *Smart Modular Technologies, Inc, et al.*, Case 4:13-cv-05889-YGR Document 305-7, filed Mar. 10, 2015, 10 pages.

File History for U.S. Appl. No. 12/240,916, filed Sep. 29, 2008, 320 pages.

File History for U.S. Appl. No. 13/905,048, filed May 29, 2013, 181 pages.

File History for U.S. Appl. No. 60/941,586, filed Jun. 1, 2007, 23 pages.

File History U.S. Pat. No. 8,671,243.

Final Office Action, dated Jun. 15, 2016, issued in U.S. Appl. No. 14/489,281, 10 pages.

Final Office Action, *SanDisk Corporation* v. *Netlist, Inc.*, U.S. Pat. No. 8,301,833, IPR2014-0099-1007 (PTAB), dated Feb. 1, 2012, 13 pages.

Final Written Decision, U.S. Pat. No. 8,671,243, IPR2017-00587-34, Paper No. 34, entered Jun. 20, 2018, 53 pages.

Final Written Decision, U.S. Pat. No. 8,874,831, IPR2017-00692, Paper No. 25, entered Jul. 5, 2018, 42 pages.

Final Written Decision, U.S. Pat. No. 7,881,150, Case No. Case IPR2014-00882, (PTAB), Paper 33, filed Dec. 14, 2015, 51 pages.

Hasan, J. et al. Efficient Use of Memory Bandwidth to Improve Network Processor Throughput, Proceedings of the 30th Annual International Symposium on Computer Architecture (ISCA'03), IEEE, 2003, 12 pages.

Inter Partes Review No. IPR2017-00692 (PTAB), U.S. Pat. No. 8,874,831, filed Jul. 26, 2012, 78 pages.

Inter Partes Review of U.S. Pat. No. 8,874,831, Case IPR2017-00692 (PTAB), filed Jul. 26, 2012, Paper No. 1, 78 pages.

International Preliminary Report on Patentabillity in PCT/US12/48750, dated Apr. 3, 2014pp. 1-8.

International Search Report and Written Opinion in PCT/US12/48750, dated Oct. 10, 2012pp. 1-10.

ISSCC 2006 / Session 7 / Non-Volatile Memory / 7.7, IEEE International Solid-State Circuits Conference, 2006, 10 pages.

(56) **References Cited**

OTHER PUBLICATIONS

Jacob, B., "Memory Systems Cache, DRAM, Disk", Morgan Kaufman Publishers, Burlington, MA, 2008, Preface and Ch. 7 pp. 315-322, 58 pages.
Jandhyala, S. et al., "Design-For-Test Analysis of a Buffered SDRAM DIMM", Semiconductor Group, Texas Instruments, Proceedings of International Workshop in Memory Technology, Design and Testing, Singapore, 13014, Aug. 1996,15 pages.
JEDEC Definition of DIMM, Exhibit 1029, IPR No. 2017-00587, Dec. 18, 2017, 2 pages.
JEDEC Global Standard for the Microelectronics Industry, Why JEDEC Standards Matter, 2014, 1 page.
JEDEC Standard No. 21-C (Release 17), Annex J: Serial Presence Detects for DDR2 SDRAM (Revision 1.3), 60 pages.
Petition for Inter Partes Review of U.S. Pat. No. 8,516,187 (on behalf of SMART Modular Technologies, Inc.), filed Aug. 22, 2014.
Petition for Inter Partes Review of U.S. Pat. No. 8,671,243, filed May 29, 2013.
Petition for Inter Partes Review of U.S. Pat. No. 8,874,831, filed Jul. 26, 2012.
Petition for Inter Partes Review of U.S. Pat. No. 8,301,833 (on behalf of SMART Modular Technologies, Inc.), filed Aug. 22, 2014.
U.S. Appl. No. 60/912,321, Case No. No. IPR2017-00692-1007 (PTAB), filed Apr. 17, 2017, 42 pages.
Petition for Inter Partes Review of U.S. Pat. No. 8,516,187, IPR2014-00982 (PTAB), dated Jun. 19, 2014, 67 pages.
Petition for Inter Partes Review of U.S. Pat. No. 8,671,243, Case No. IPR2017-00587-1(PTAB), May 29, 2013, 82 pages.
Petition for Inter Partes Review, *SanDisk Corporation* v. *Netlist, Inc*., U.S. Pat. No. 8,301,833, IPR2014-00994 (PTAB), filed Jun. 20, 2014, 69 pages.
Webster's II New College Dictionary, Houghton Mifflin Company, Boston, MA, 2001, pp. 259, 1115.
Videotaped Deposition of Russel Jacob Baker, U.S. Pat. No. 8,671,243, Case Nos. IPR2017-00587-1030 (PTAB), filed Dec. 18, 2017, 268 pages.
Petitioners Demonstratives, *SK hynix Inc., et al*., v. *Netlist, Inc*., U.S. Pat. No. 8,671,243, IPR2017-00587-1037, 89 pages.
Petitioners' Reply in Support of its Motion to Exclude, U.S. Pat. No. 8,874,831, Case No. IPR2017-00692, filed Apr. 9, 2018, 8 pages.
Petitioners' Reply to Patent Owner's Response, Inter Partes Review No. IPR2017-00587-16, U.S. Pat. No. 8,671,243, filed Jan. 12, 2018, 38 pages.
Petitioners' Reply, U.S. Pat. No. 8,874,831, Case No. IPR2017-00692 (PTAB), Paper No. 15, filed Mar. 2, 2018, 35 pages.
Petitioners' Request for Hearing, U.S. Pat. No. 8,301,833, Case No. Case No. IPR2017-00649-2020 (PTAB), Paper No. 8, entered Aug. 23, 2017, 18 pages.
Prosecution History, U.S. Appl. No. 12/240,916, U.S. Pat. No. 8,301,833, *SK hynix Inc* v *Netlist Inc*, Case No. IPR2017-00649-1002 (PTAB), 320 pages.
Prosecution History, U.S. Appl. No. 13/559,476, U.S. Pat. No. 8,301,833, *SK hynix Inc* v *Netlist Inc*, Case No. IPR2017-00649-1002 (PTAB), 312 pages.
Prosecution History, U.S. Appl. No. 60/941,586, *SK hynix Inc* v *Netlist Inc*, Case No. IPR2017-00649-1005 (PTAB), 23 pages.
Provisional Application for Advance Dynamic Disk Memory Module, Specification, *SK hynix Inc*., V. *Netlist, Inc*., Case No. IPR2017-00649-1006 (PTAB), dated Dec. 8, 2005, 53 pages.
U.S. Appl. No. 60/912,321, filed Apr. 17, 2007.
U.S. Appl. No. 60/941,586, filed Jun. 1, 2007.
Requirement for Restriction Election, *SanDisk Corporation* v. *Netlist, Inc*., U.S. Pat. No. 8,301,833, IPR2014-00994-1003 (PTAB), dated Mar. 31, 2019, 7 pages.
Restriction Requirement in U.S. Appl. No. 12/240,916, dated Mar. 31, 2011.
Search Report (Updated) Prior Art Search for U.S. Pat. No. 8,301,833, Global Patent Solutions, Nov. 24, 2020, 179 pages.
Search Report Prior Art Search for U.S. Pat. No. 8,301,833, Global Patent Solutions, Nov. 2, 2020, 38 pages.
Second Amended Answer and Counterclaims to Plaintiff's Complaint for Declaratory Judgment, *Diablo Technologies, Inc*. v. *Netlist, Inc*., Case No. 4:13-CV-03901 (NDCA), YGR, filed Feb. 17, 2014, 21 pages.
Supplemental Declaration of Ronald H. Spuhler, *Netlist* v. *Smart Storage Systems, Inc. et. al*., Case 4:13-cv-05889-YGR Document 305-1, filed Mar. 10, 2015, 2 pages.
U.S. Office Action in U.S. Appl. No. 13/536,173, dated Apr. 15, 2013, pp. 1-10.
U.S. Appl. No. 12/240,916, Case No. IPR2017-00692-2018 (PTAB), dated Sep. 29, 2008, 52 pages.
Third Amended Complaint for Patent Infringement, *Netlist* v. *Smart Storage Systems, Inc. et. al*., Case 4:13-CV-05889-YGR (NDCA), filed Oct. 7, 2014, 21 pages.
Drawing by R. Jacob Bake regarding Address of DRAM and Flash, U.S. Pat. No. 8,671,243, Case IPR2017-00587-1023 (PTAB), filed Dec. 18, 2017, 1 page.
Advisory Action in U.S. Appl. No. 12/240,916, dated Mar. 13, 2012.
Amendment and Reply to Office Action, *SanDisk Corporation* v. *Netlist*, U.S. Appl. No. 13/536,173, IPR2014-00982 (PTAB), dated May 21, 2013, 24 pages.
Amendment and Response to Election Restriction, *SanDisk Corporation* v. *Netlist, Inc*., U.S. Pat. No. 8,301,833, IPR2014-00994-1004 (PTAB), dated May 20, 2011, 9 pages.
American Heritage Dictionary of the English Language, Third Ed., Houghton Mifflin Company, Boston, MA, 1996, 7 pages.
Appeals from the USPTO, PTAB in Nos. IPR2014-00882, IPR2014-00883, IPR2014-01011, US Court of Appeals for the Federal Circuit, decided Jul. 25, 2017, 8 pages.
Charles C., Multiplexers and Demultiplexers, Ex. 1024, IPR No. 2017-00587-1024(PTAB), 2003, 8 pages.
Charles C., Multiplexers and Demultiplexers, Ex. 1033, IPR No. 2017-00587-1033 (PTAB), 2003, 8 pages.
Charles C., Multiplexers and Demultiplexers, Ex. 1034, IPR No. 2017-00587-1033 (PTAB), 2003, 8 pages.
Charles C., Multiplexers and Demultiplexers, Ex. 1035, IPR No. 2017-00587-1035 (PTAB), 2003, 8 pages.
Corrected Petition for Inter Partes Review of Claims 1-30 of U.S. Pat. No. 8,301,833, Declaration of Michael F. Heafey, IPR2014-01370 (PTAB), filed Sep. 22, 2014, 4 pages.
Corrected Petition for Inter Partes Review of Claims 1-32 of U.S. Pat. No. 8,516,187, IPR2014-01371 (PTAB), Sep. 22, 2014, 67 pages.
Corrected Petition for Inter Partes Review of Claims 1-32 of U.S. Pat. No. 8,516,187, Declaration of Dr. Nader Bagherzadeh, IPR2014-01371 (PTAB), filed Sep. 22, 2014, 306 pages.
Decision Denying Institution of Inter Partes Review, U.S. Pat. No. 8,516,187, IPR2014-01371 (PTAB), Paper 12, entered Mar. 13, 2015, 22 pages.
Decision Denying Institution of Inter Partes Review, *SanDisk Corporation* v. *Netlist, Inc*., U.S. Pat. No. 8,301,833, IPR2014-00994 (PTAB), Paper 8, dated Dec. 16, 2014, 16 pages.
Decision Denying Institution of Inter Partes Review, *SanDisk Corporation* v. *Netlist*, U.S. Pat. No. 8,516,187, IPR2014-00982 (PTAB), Paper 9, dated Dec. 22, 2014, 16 pages.
Decision Denying Institution of Inter Partes Review, *Smart Modular Tech* v *Netlist Inc*., U.S. Pat. No. 8,301,833, IPR2014-01370 (PTAB), Paper 13, entered Mar. 13, 2015, 19 pages.
Decision Instituting Inter Partes Review, U.S. Pat. No. 8,671,243, Case No. IPR2017-00587-7(PTAB), Paper No. 7, entered Jun. 22, 2017, 40 pages.
Declaration of R. Jacob Baker, U.S. Pat. No. 8,874,831, Case IPR2017-00692-2016 (PTAB), filed Nov. 10, 2017, 72 pages.
Declaration of R. Jacob Baker, U.S. Pat. No. 8,671,243, Case IPR2017-00587-2016 (PTAB), filed Oct. 13, 2019, 109 pages.
Declaration of Jeff McMullen, *Netlist, Inc*. v. *Diablo Technologies, Inc*., Case No. 4: I 3-CV-05889-YGR (NDCA), Document 362-1, filed Sep. 5, 2018, 3 pages.
Declaration of Paul Min, In Inter Partes Review of U.S. Pat. No. 8,301,833, IPR2014-00994-1020 (PTAB), filed Sep. 29, 2008, 215 pages.

(56) **References Cited**

OTHER PUBLICATIONS

Declaration of Paul Min, In Inter Partes Review of U.S. Pat. No. 8,516,187, IPR2014-00982-1013 (PTAB), filed Jun. 28, 2012, pp. 240.
Declaration of Ron Maltiel, U.S. Pat. No. 8,671,243, No. IPR2017-00587-1003 (PTAB), filed May 29, 2013, 131 pages.
Declaration of Ron Maltiel, U.S. Pat. No. 8,874,831, No. IPR2017-00692-1003 (PTAB), filed Jul. 26, 2012 29, 172 pages.
Declaration of Steven J. Corr, *Netlist, Inc.* v. *SMART Storage Systems, Inc., et al.*, Case 4:13-cv-05889-YGR (NDCA), Document 305-8, filed Mar. 10, 2015, 3 pages.
Deposition of Baker, Exhibit 1030, p. 78, U.S. Pat. No. 8,671,243, *SK hynix Inc., et al.* v. *Netlist, Inc.*, Case No. IPR-2017-00587 (PTAB), filed Dec. 18, 2017, 268 pages.
Deposition of Ron Maltiel, U.S. Pat. No. 8,874,831, Case No. IPR2017-00692-2010 (PTAB), dated Sep. 27, 2017, 155 pages.
Joint Status Report Regarding Inter Partes Review, *Netlist* v. *Smart Storage Systems, Inc. et. al.*, Case No. 4:13-CV-05889-YGR (NDCA), filed Aug. 17, 2018, 4 pages.
Material Science & Engineering, Department of Material Science and Engineering, Stanford University, Exhibit 2011, Case No. IPR2017-00692, 2 pages.
Merriam-Webster's Collegiate Dictionary, Eleventh Ed., Merriam Webster Corporation, Springfield, MA, 2003, 7 pages.
Microsoft Computer Dictionary Fifth Edition, 2002, 3 pages.
Microsoft Computer Dictionary Fifth Edition, 2002, 9 pages.
Microsoft Press, Computer Dictionary, Second Edition, 1994, 4 pages.
Microsoft Windows 2000 Professional Resource Kit, 76 pages.
Notice of Allowance in U.S. Appl. No. 12/240,916, dated Sep. 17, 2012.
Notice of Allowance in U.S. Appl. No. 13/536,173, dated Jul. 2, 2013.
Notice of Allowance in U.S. Appl. No. 13/559,476, dated May 6, 2014.
Notice of Allowance in U.S. Appl. No. 13/559,476, dated Sep. 29, 2014.
Notice of Allowance in U.S. Appl. No. 13/905,048, dated Dec. 19, 2013, 8 pages.
Notice of Allowance in U.S. Appl. No. 13/905,053, dated Dec. 11, 2013.
Notice of Allowance in U.S. Appl. No. 14/173,219 dated Jul. 7, 2014.
Notice of Allowance in U.S. Appl. No. 14/489,269, dated Oct. 8, 2015.
Notice of Allowance, *SanDisk Corporation* v. *Netlist*, U.S. Appl. No. 13/536,173, IPR2014-00982 (PTAB), dated Jul. 2, 2013, 8 pages.
Office Action in U.S. Appl. No. 12/240,916, dated Apr. 3, 2012.
Office Action in U.S. Appl. No. 13/536,176, dated Apr. 15, 2013.
Office Action in U.S. Appl. No. 13/625,563, dated Aug. 5, 2013.
Office Action in U.S. Appl. No. 13/625,563, dated May 9, 2014.
Office Action in U.S. Appl. No. 13/905,048, dated Aug. 1, 2013.
Office Action in U.S. Appl. No. 13/905,053, dated Aug. 1, 2013.
Office Action in U.S. Appl. No. 14/173,219, dated Mar. 13, 2014.
Office Action in U.S. Appl. No. 14/302,292, dated Dec. 21, 2015.
Office Action in U.S. Appl. No. 12/240,916, dated Feb. 1, 2012, 14 pages.
Office Action in U.S. Appl. No. 14/173,242, dated Mar. 14, 2014, 7 pages.
Office Action, U.S. Appl. No. 12/240,916, IPR2014-0099-1005 (PTAB), dated Jul. 29, 2011, 8 pages.
Office Action, U.S. Appl. No. 12/240,916, IPR2014-0099-1010 (PTAB), dated Apr. 3, 2012, 11 pages.
Office Action, U.S. Appl. No. 13/536,173, IPR2014-00982 (PTAB), dated Apr. 15, 2013, 9 pages.
Patent Owner's Demonstratives, U.S. Pat. No. 8,671,243, Case No. IPR 2017-00587-2023, (PTAB), 57 pages.
Patent Owner's Listing of New Arguments and Evidence in Petitioners' Reply, U.S. Pat. No. 8,671,243, Case No. IPR2017-00587 (PTAB), filed Jan. 29, 2018, 6 pages.
Patent Owner's Opposition to Petitioners' Motion to Exclude, U.S. Pat. No. 8,874,831, Case No. IPR2017-00692 (PTAB), filed Apr. 2, 2018, 2017, 11 pages.
Patent Owner's Preliminary Response, U.S. Pat. No. 8,516,187, Case IPR2014-01371 (PTAB), filed Dec. 16, 2014, 66 pages.
Patent Owner's Preliminary Response, *SanDisk Corporation* v. *Netlist, Inc.*, U.S. Pat. No. 8,301,833, IPR2014-00994 (PTAB), Paper 8, dated Oct. 2, 2014, 60 pages.
Patent Owner's Preliminary Response, *SanDisk Corporation* v. *Netlist*, U.S. Pat. No. 8,516,187, IPR2014-00982 (PTAB), dated Sep. 26, 2014, 57 pages.
Patent Owner's Preliminary Response, *SK hynix Inc., et al.*, v. *Netlist*, U.S. Pat. No. 8,301,833, Case No. IPR2017-00649 (PTAB), filed May 1, 2017, 67 pages.
Patent Owner's Preliminary Response, *SK hynix Inc., et al.*, v. *Netlist*, U.S. Pat. No. 8,874,831, Case No. IPR2017-00692 (PTAB), filed May 1, 2017, 48 pages.
Patent Owner's Preliminary Response, *Smart Modular Tech* v *Netlist Inc.*, U.S. Pat. No. 8,301,833, Case IPR2014-01370 (PTAB), filed Dec. 16, 2014, 66 pages.
Patent Owner's Response, U.S. Pat. No. 8,671,243, Case No. IPR2017-00587-12 (PTAB), filed Oct. 13, 2017, 80 pages.
Patent Owner's Response, *SK hynix Inc., et al.*, v. *Netlist*, U.S. Pat. No. 8,874,831, Case No. IPR2017-00692-12 (PTAB), filed Nov. 10, 2017, 77 pages.
Petition for Inter Partes Review of Claims 1-30 of U.S. Pat. No. 8,301,833, IPR2014-01370 (PTAB), filed Aug. 22, 2014, 68 pages.
Petition for Inter Partes Review of U.S. Pat. No. 8,301,833 (on behalf of SanDisk, Corp.), filed Jun. 20, 2014.
Petition for Inter Partes Review of U.S. Pat. No. 8,301,833, filed Sep. 29, 2008.
Petition for Inter Partes Review of U.S. Pat. No. 8,516,187 (on behalf of SanDisk, Corp.), filed Jun. 19, 2014.

* cited by examiner

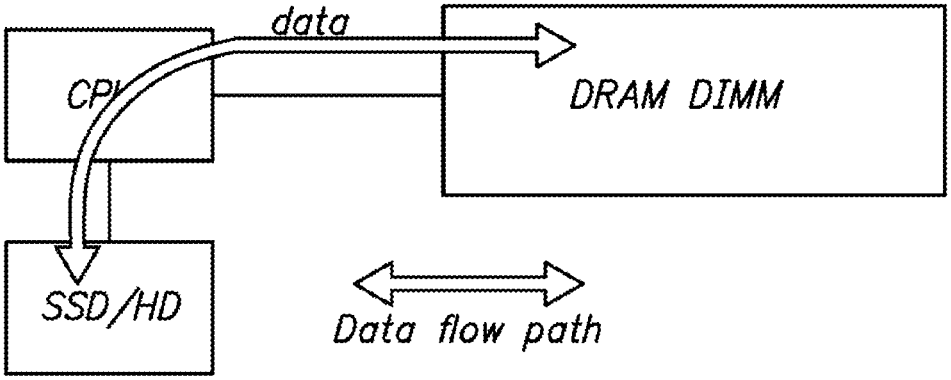

FIG. 1
(PRIOR ART)

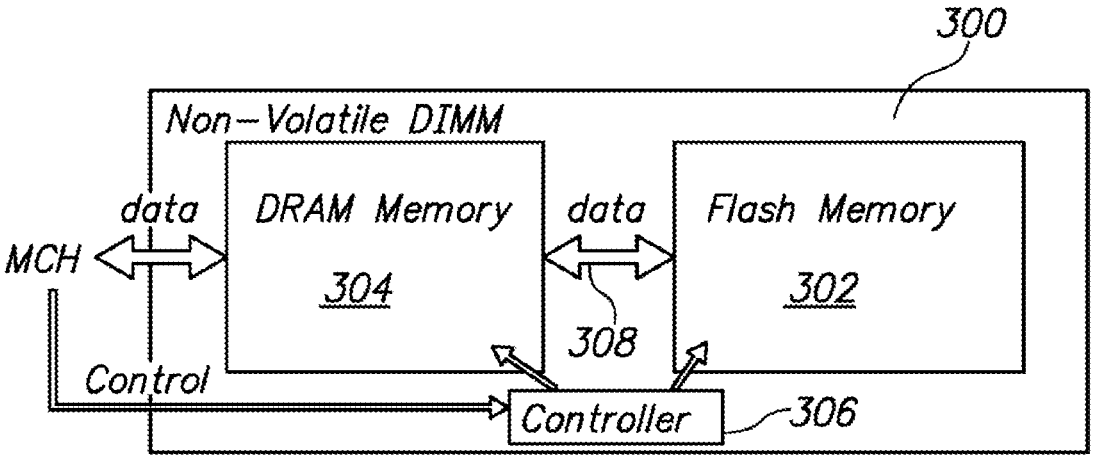

FIG. 3A

Spansion EcoRAM Configurations

256GB Spansion EcoRAM Solution – Single Accelerator

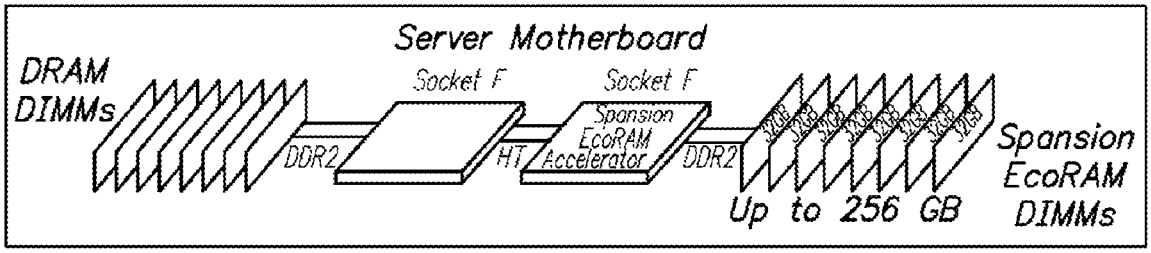

256GB Single Accelerator Spansion EcoRAM Solution

256GB Spansion EcoRAM Solution – Dual Accelerator

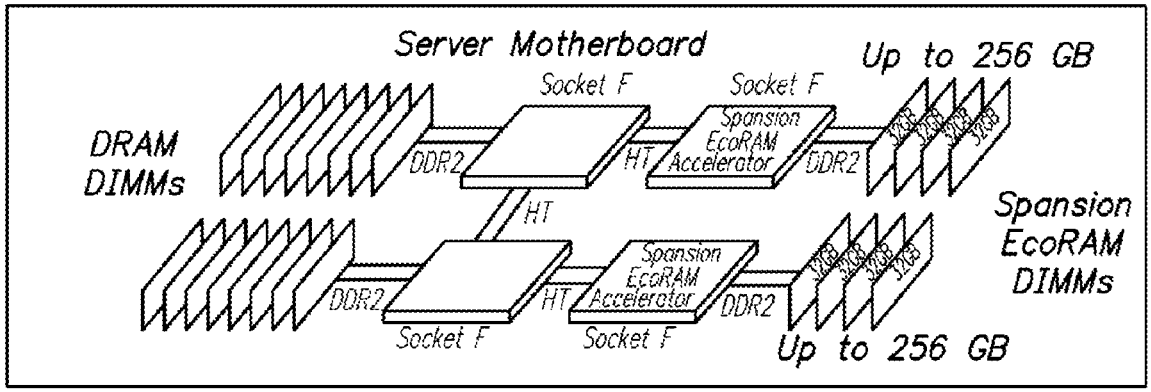

256GB Single Accelerator Spansion EcoRAM Solution

FIG. 2
(PRIOR ART)

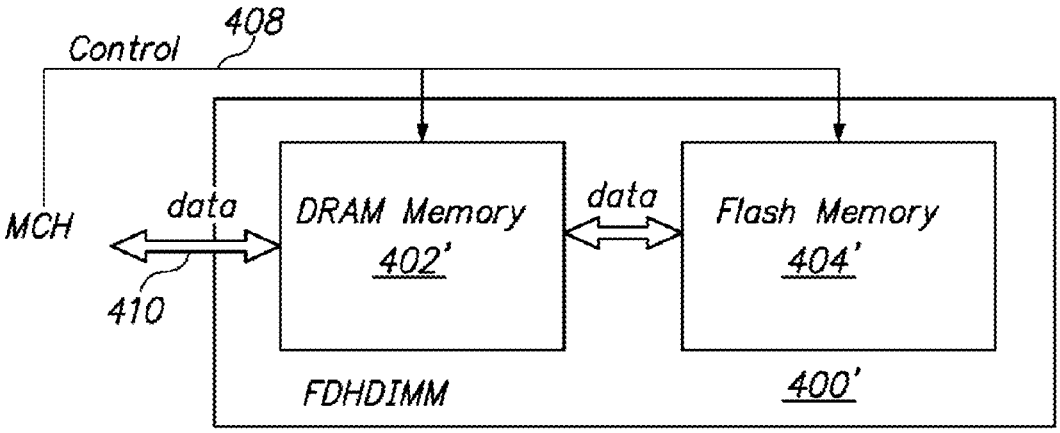

FIG. 4B

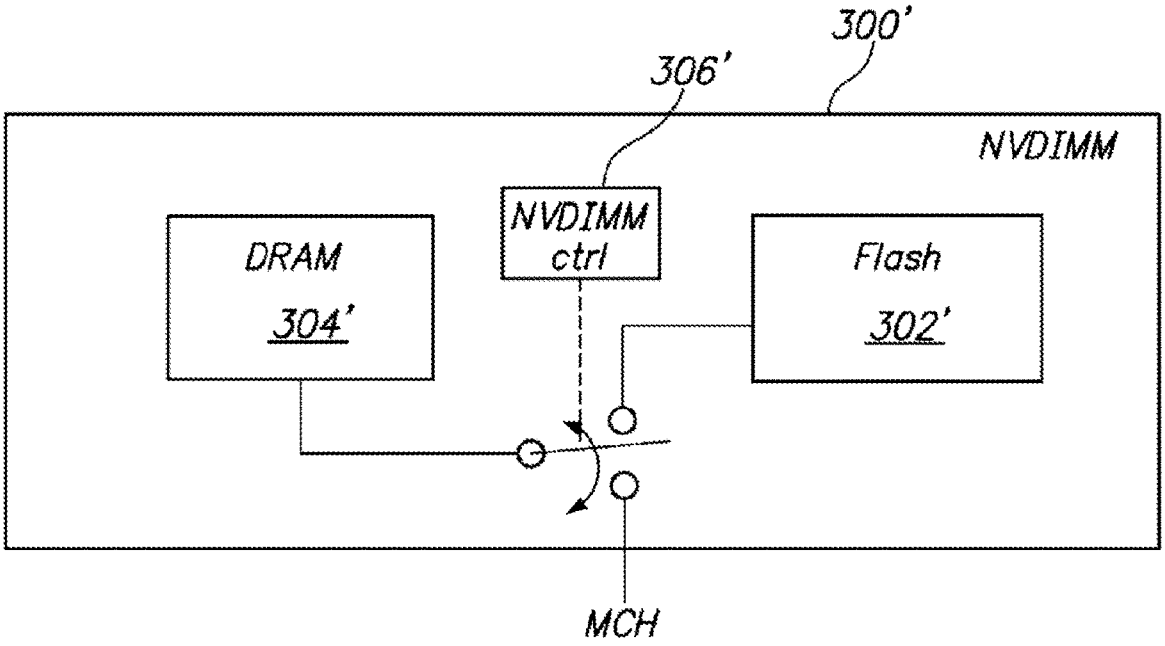
300'
306'
NVDIMM
NVDIMM ctrl
DRAM
304'
Flash
302'
MCH

FIG. 3B

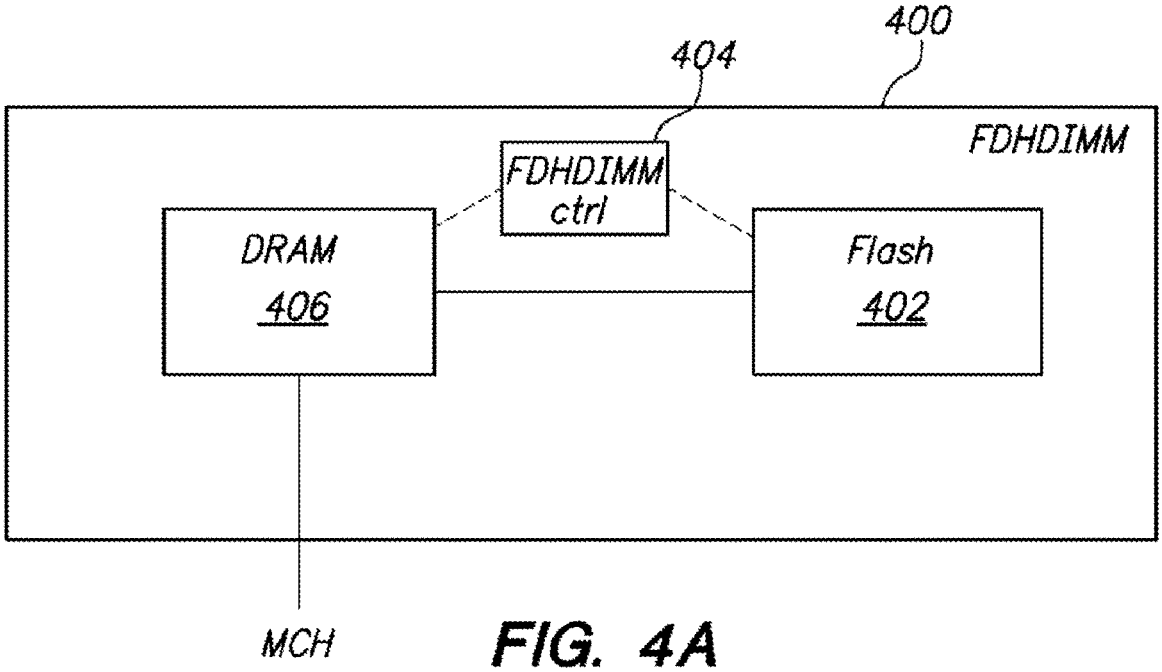
400
404
FDHDIMM
FDHDIMM ctrl
DRAM
406
Flash
402
MCH

FIG. 4A

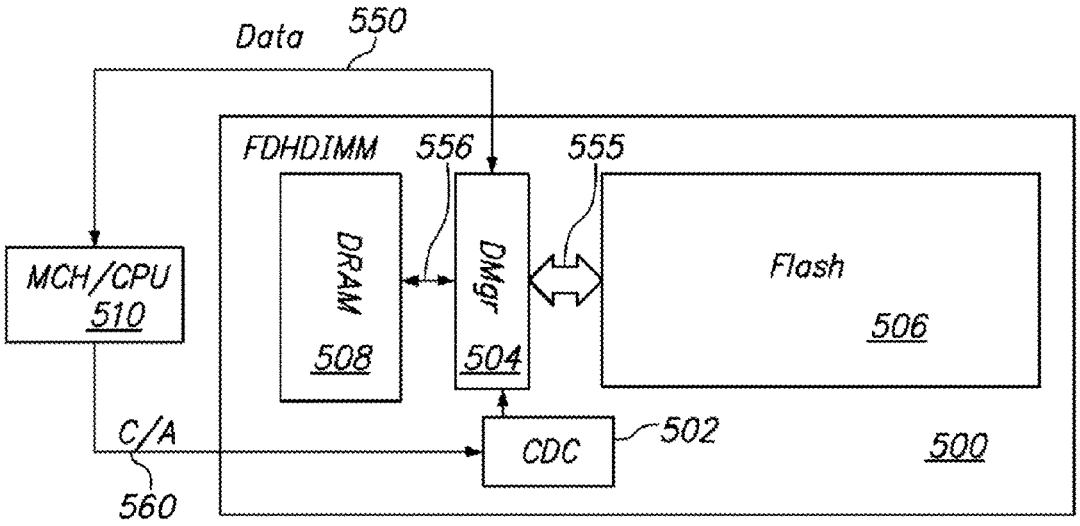
Data
550
FDHDIMM
556
555
DRAM
508
DMgr
504
Flash
506
MCH/CPU
510
C/A
560
CDC
502
500

FIG. 5A

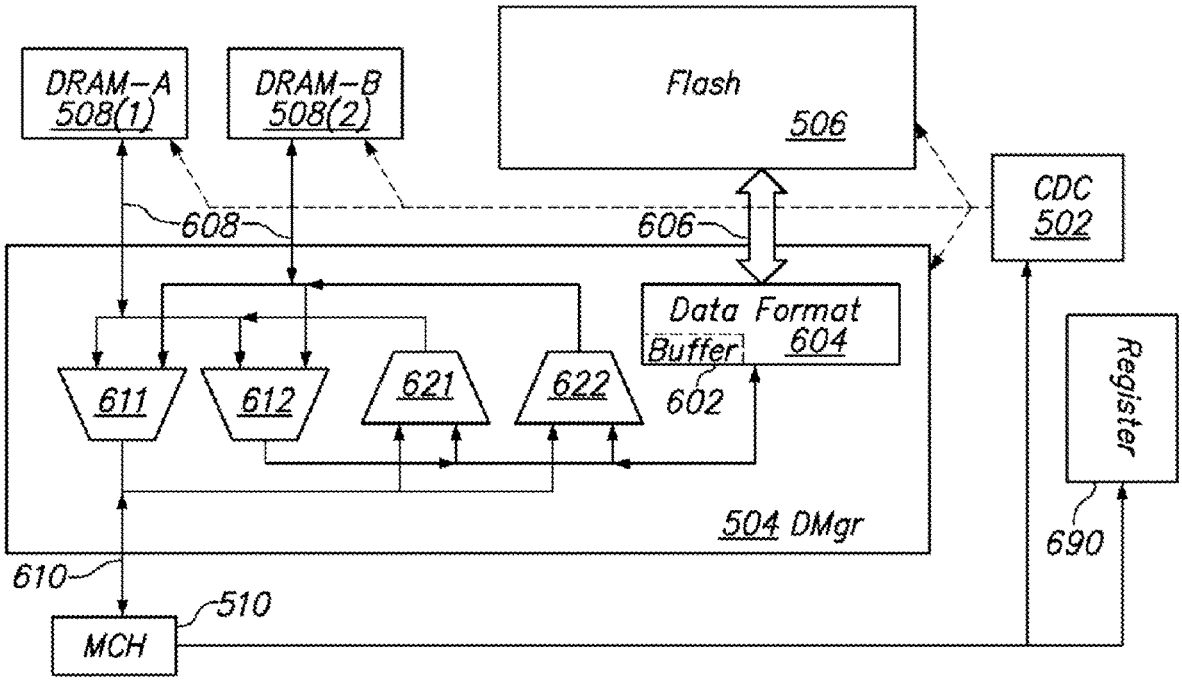
DRAM-A
508(1)
DRAM-B
508(2)
Flash
506
CDC
502
608
606
Data Format
604
Buffer
602
611
612
621
622
Register
690
504 DMgr
610
510
MCH

FIG. 6

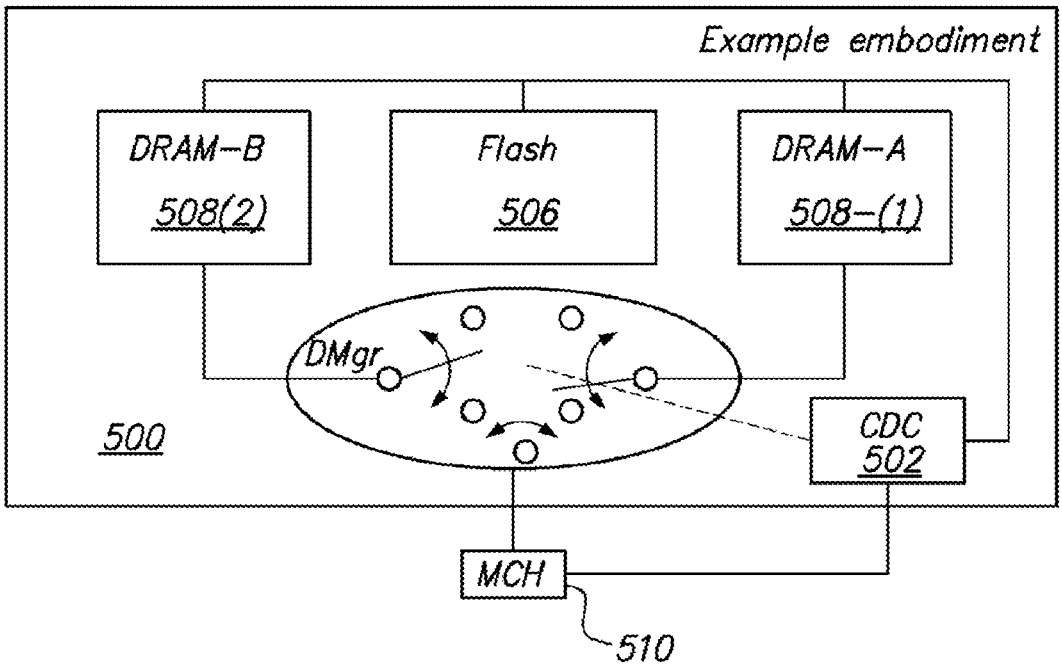
Example embodiment
DRAM–B
508(2)
Flash
506
DRAM–A
508–(1)
DMgr
500
CDC
502
MCH
510

FIG. 5B

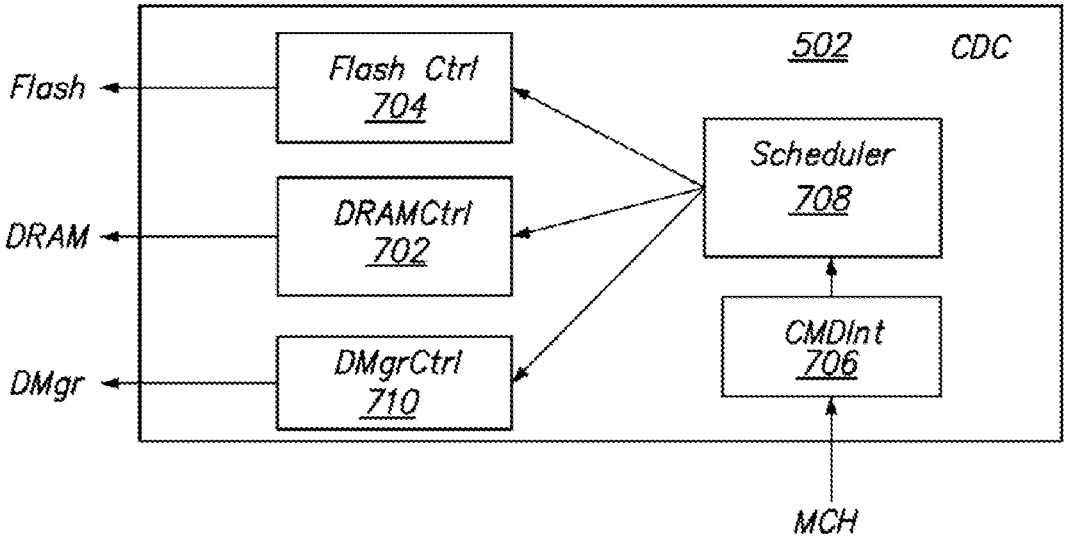
502
CDC
Flash
Flash Ctrl
704
DRAM
DRAMCtrl
702
DMgr
DMgrCtrl
710
Scheduler
708
CMDInt
706
MCH

FIG. 7

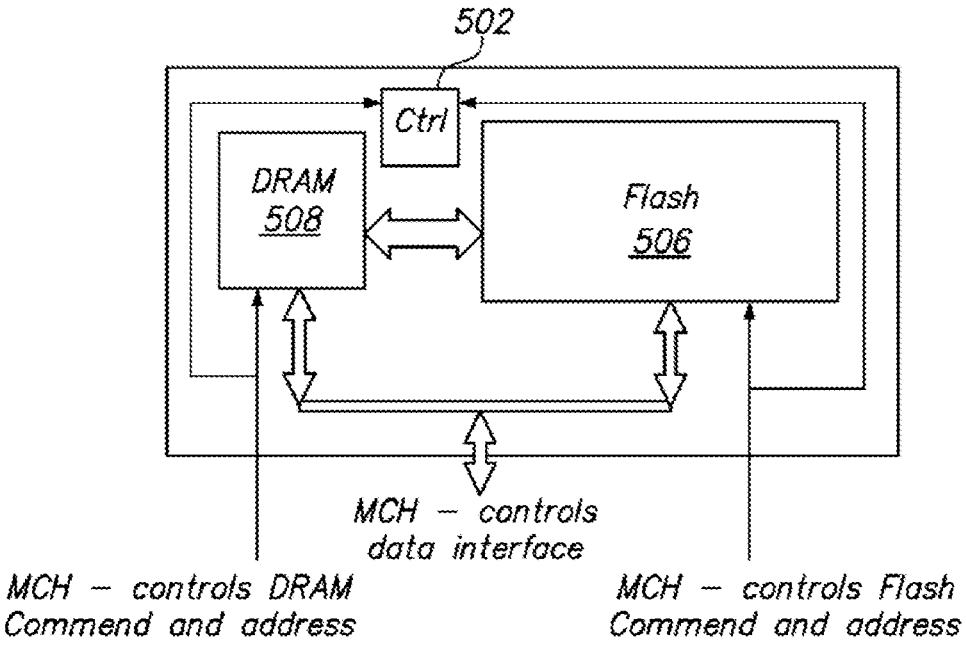
502
Ctrl
DRAM
508
Flash
506
MCH – controls
data interface
MCH – controls DRAM
Commend and address
MCH – controls Flash
Commend and address

FIG. 8A

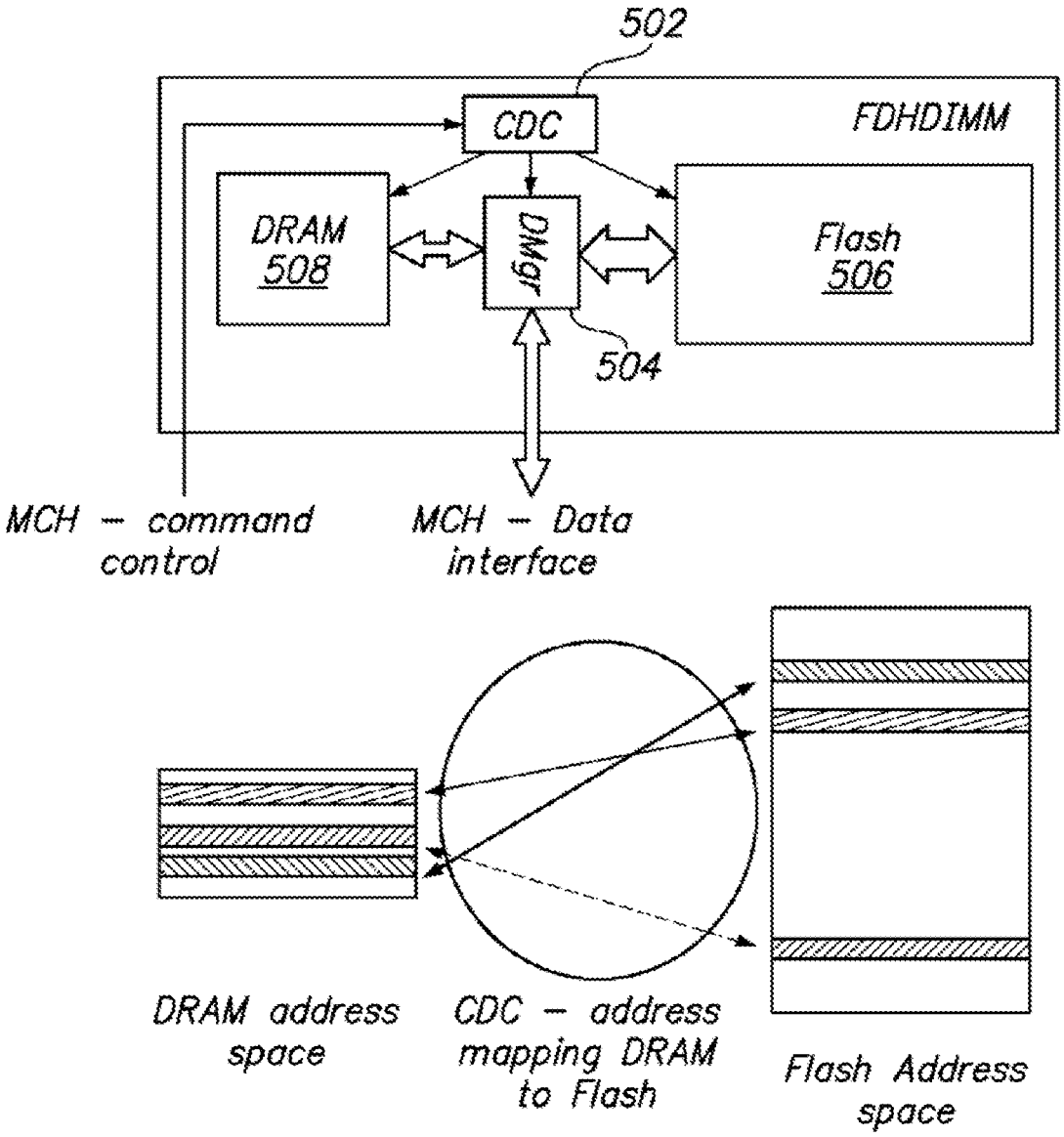
502
CDC
FDHDIMM
DRAM
508
DMgr
Flash
506
504
MCH – command control
MCH – Data interface
DRAM address space
CDC – address mapping DRAM to Flash
Flash Address space

FIG. 8B

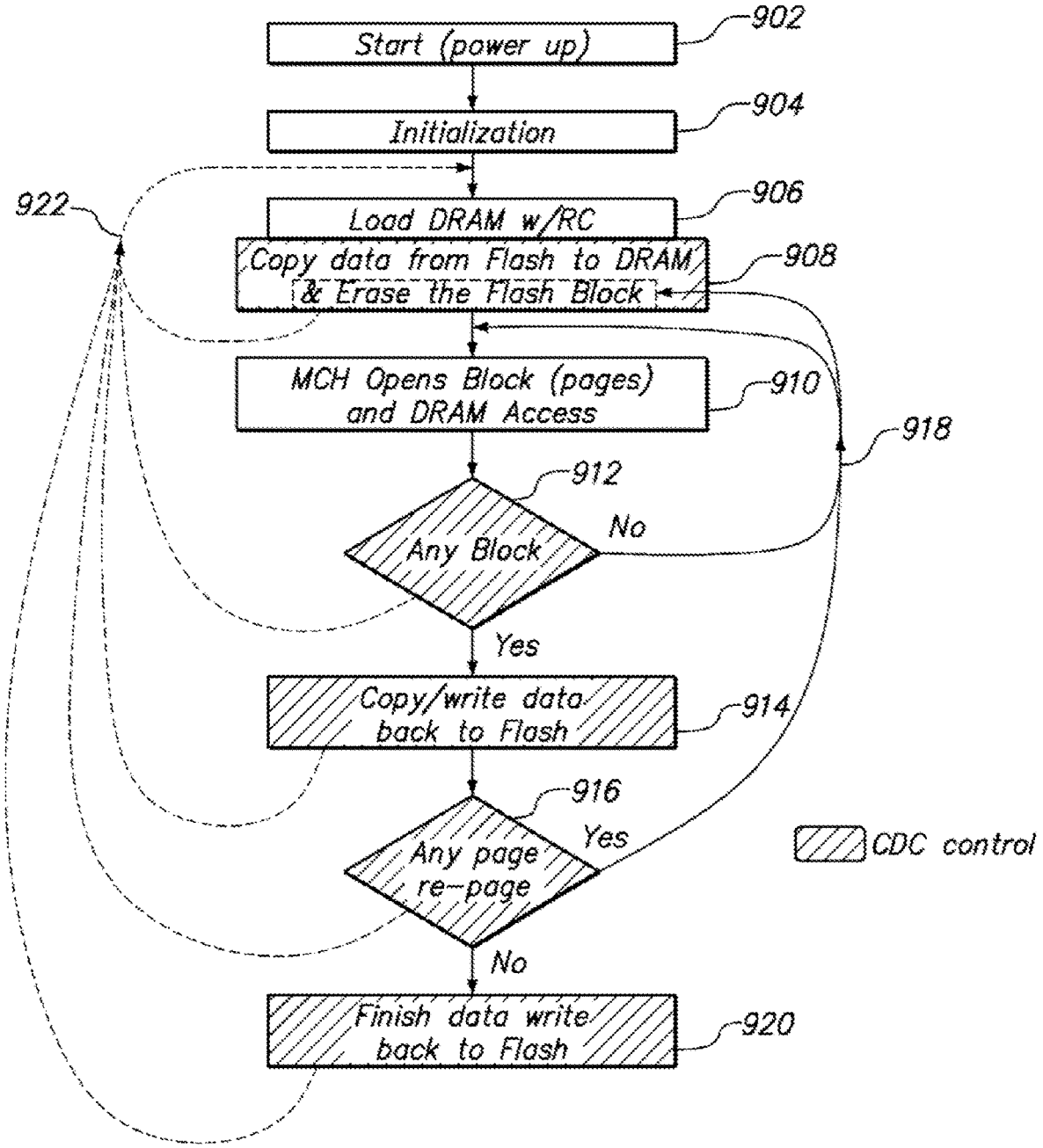
Start (power up)
902
Initialization
904
Load DRAM w/RC
906
Copy data from Flash to DRAM & Erase the Flash Block
908
MCH Opens Block (pages) and DRAM Access
910
Any Block
912
No
Yes
Copy/write data back to Flash
914
Any page re-page
916
Yes
No
Finish data write back to Flash
920
922
918
CDC control

FIG. 9

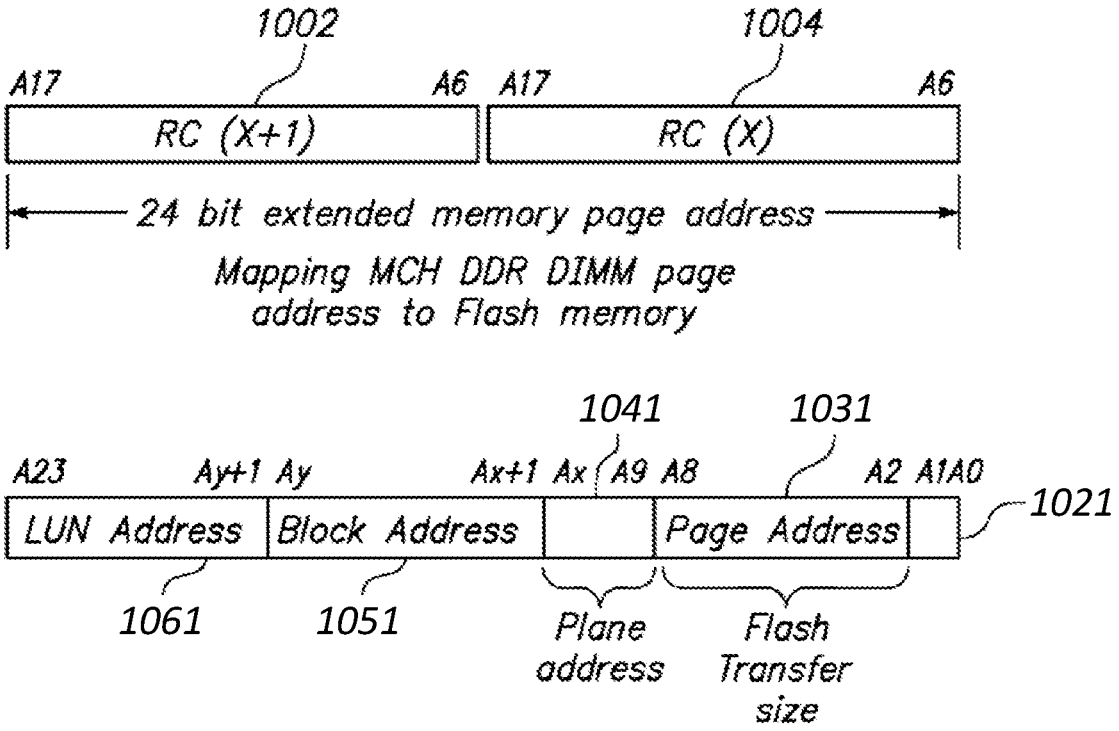
1002
1004
A17
A6
A17
A6
RC (X+1)
RC (X)
24 bit extended memory page address
Mapping MCH DDR DIMM page address to Flash memory
1041
1031
A23
Ay+1
Ay
Ax+1
Ax
A9
A8
A2
A1A0
1021
LUN Address
Block Address
Page Address
1061
1051
Plane address
Flash Transfer size

FIG. 10

DRAM density (GB)	# of blocks per bank	Flash wr–time to rd–time ratio	Avg block use time (sec)	Flash write time (sec)	Max allowed Closed Blk in queue to be written back to Flash
1	250	55	1.00E–03	2.00E–02	0
1	250	55	1.00E–02	2.00E–02	2
1	250	55	2.00E–02	2.00E–02	5
1	250	55	5.00E–02	2.00E–02	11
2	500	55	1.00E–03	2.00E–02	0
2	500	55	1.00E–02	2.00E–02	5
2	500	55	2.00E–02	2.00E–02	9
2	500	55	5.00E–02	2.00E–02	23
4	1000	55	1.00E–03	2.00E–02	1
4	1000	55	1.00E–02	2.00E–02	9
4	1000	55	2.00E–02	2.00E–02	18
4	1000	55	5.00E–02	2.00E–02	45

FIG. 11

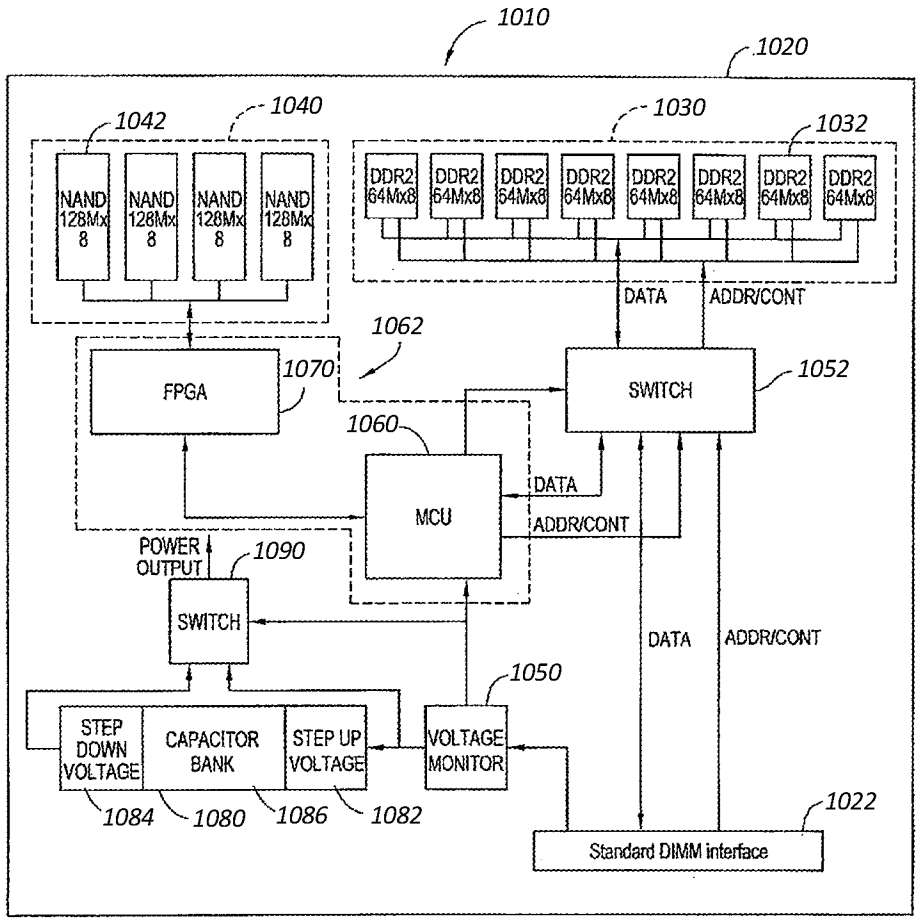
1010
1020
1042
1040
1030
1032
NAND 128Mx 8
NAND 128Mx 8
NAND 128Mx 8
NAND 128Mx 8
DDR2 64Mx8
DDR2 64Mx8
DDR2 64Mx8
DDR2 64Mx8
DDR2 64Mx8
DDR2 64Mx8
DDR2 64Mx8
DDR2 64Mx8
DATA
ADDR/CONT
1062
FPGA
1070
SWITCH
1052
1060
MCU
DATA
ADDR/CONT
POWER OUTPUT
1090
SWITCH
DATA
ADDR/CONT
1050
STEP DOWN VOLTAGE
CAPACITOR BANK
STEP UP VOLTAGE
VOLTAGE MONITOR
1084
1080
1086
1082
1022
Standard DIMM interface

FIG. 12

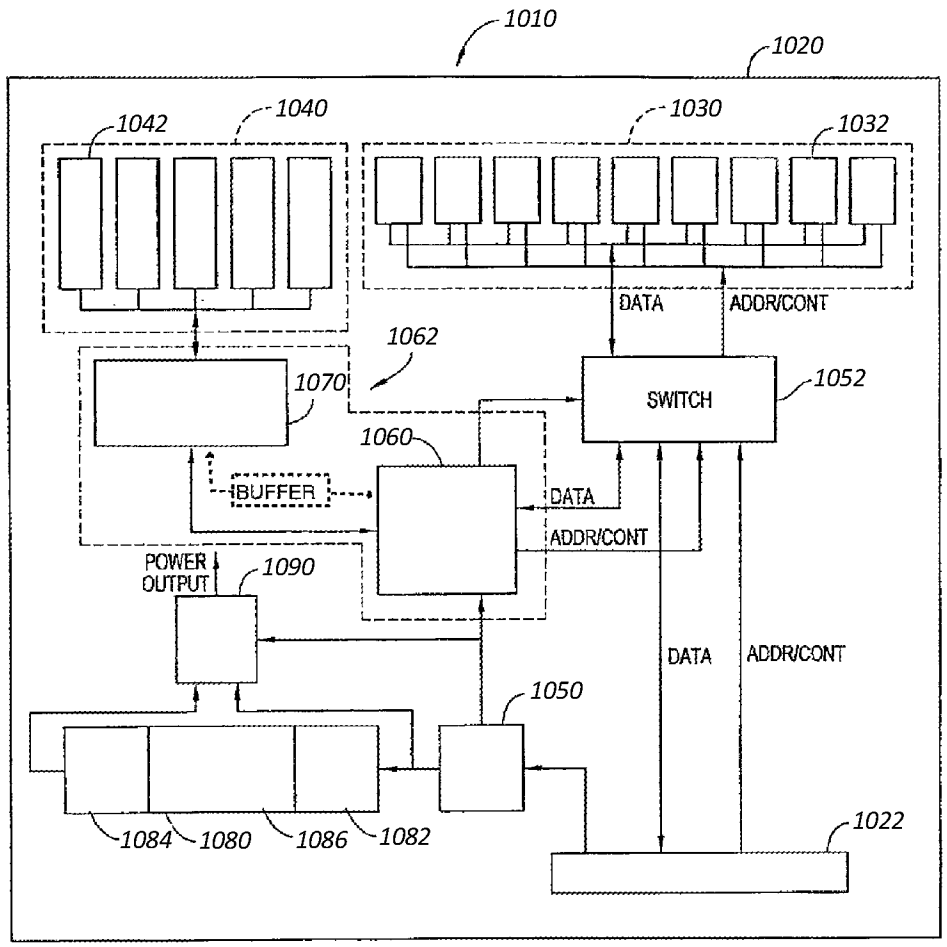
1010
1020
1042
1040
1030
1032
DATA
ADDR/CONT
1062
1070
SWITCH
1052
1060
BUFFER
DATA
ADDR/CONT
POWER OUTPUT
1090
DATA
ADDR/CONT
1050
1084
1080
1086
1082
1022

FIG. 13

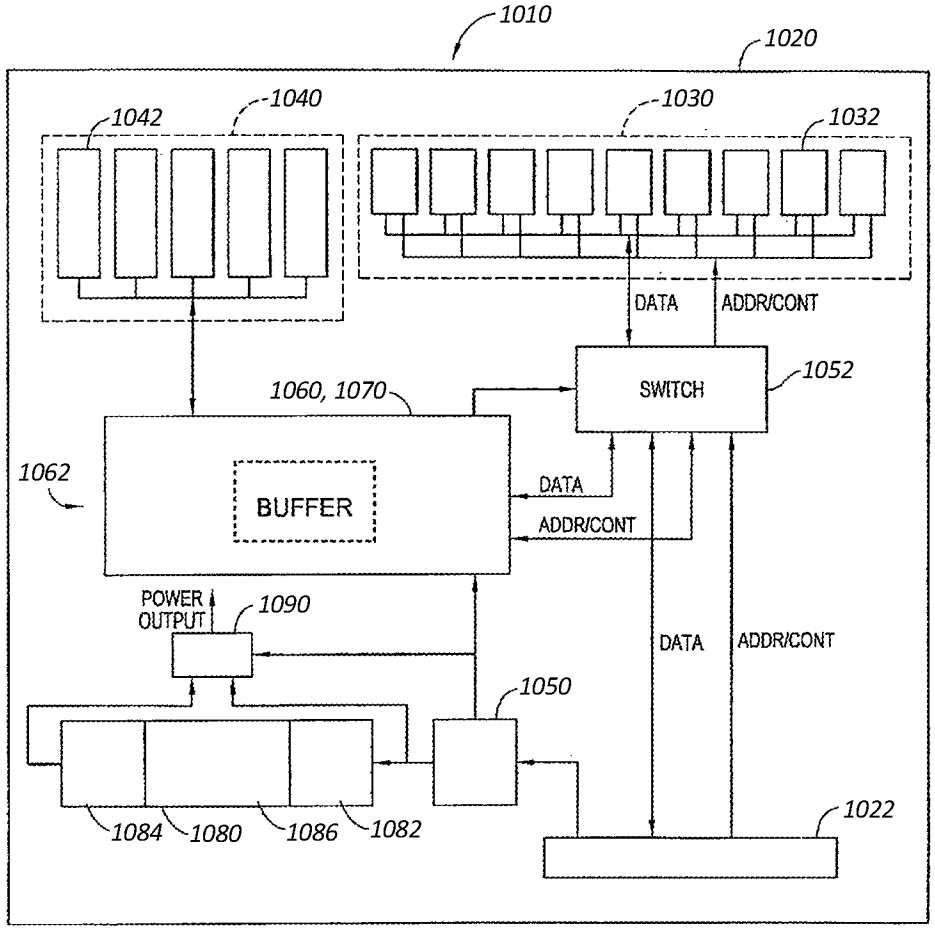
1010
1020
1042
1040
1030
1032
DATA
ADDR/CONT
SWITCH
1052
1060, 1070
1062
BUFFER
DATA
ADDR/CONT
POWER OUTPUT
1090
DATA
ADDR/CONT
1050
1022
1084
1080
1086
1082

FIG. 14

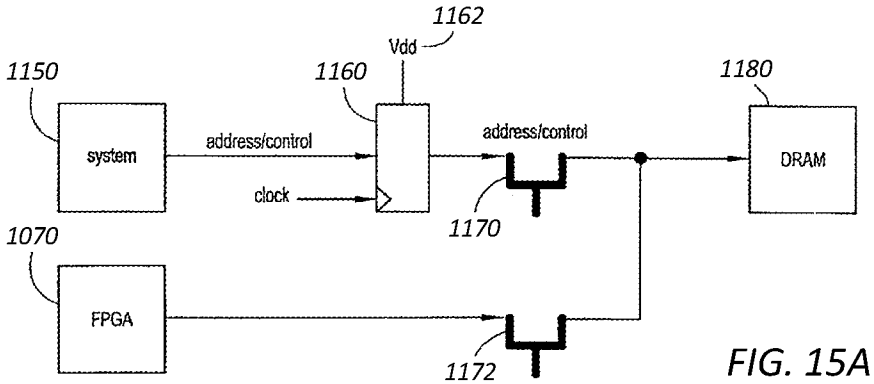

FIG. 15A

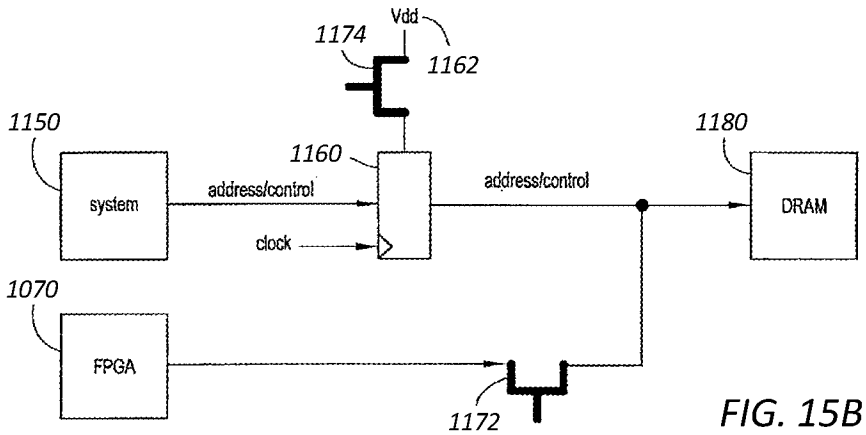

FIG. 15B

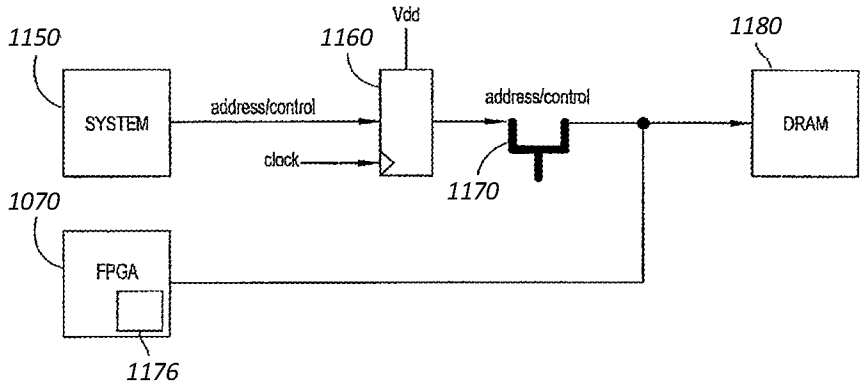
1150
SYSTEM
address/control
clock
1160
Vdd
address/control
1170
1180
DRAM
1070
FPGA
1176

FIG. 15C

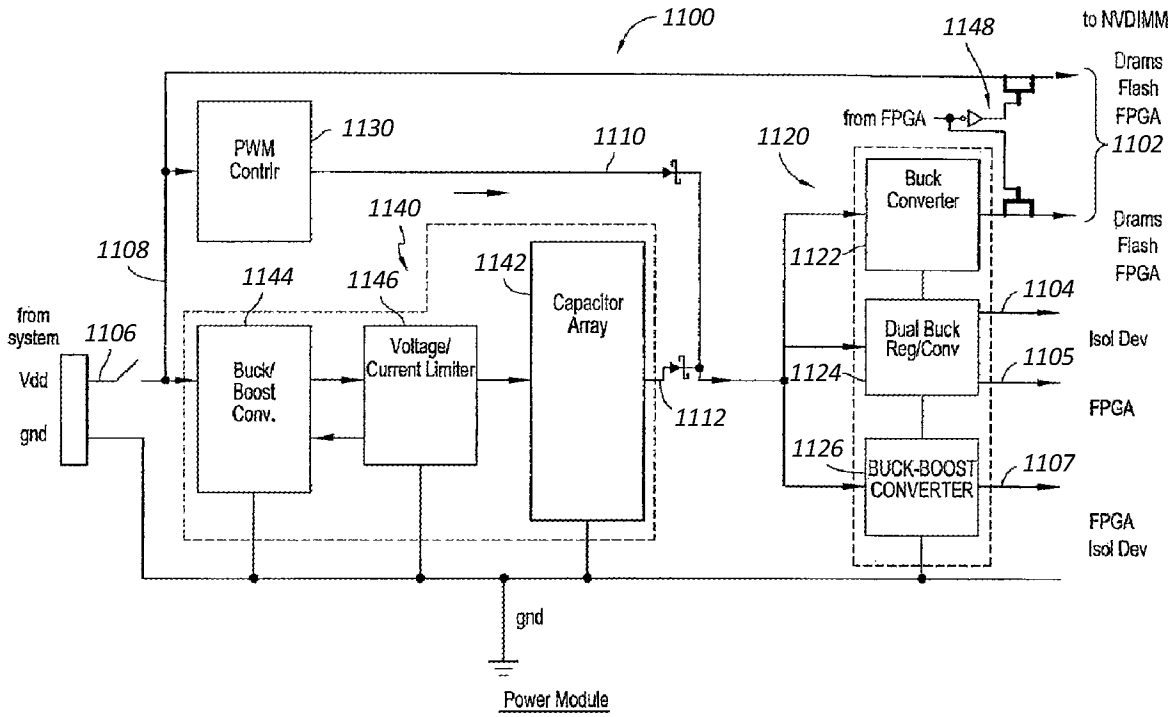
1100
1148
to NVDIMM
Drams
Flash
FPGA
1102
from FPGA
PWM Contlr
1130
1110
1120
Buck Converter
1140
1108
1144
1146
1142
Capacitor Array
1122
Drams
Flash
FPGA
1104
from system
1106
Vdd
gnd
Buck/ Boost Conv.
Voltage/ Current Limiter
Dual Buck Reg/Conv
1105
Isol Dev
1124
1112
FPGA
1126
BUCK-BOOST CONVERTER
1107
FPGA
Isol Dev
gnd
Power Module

FIG. 16

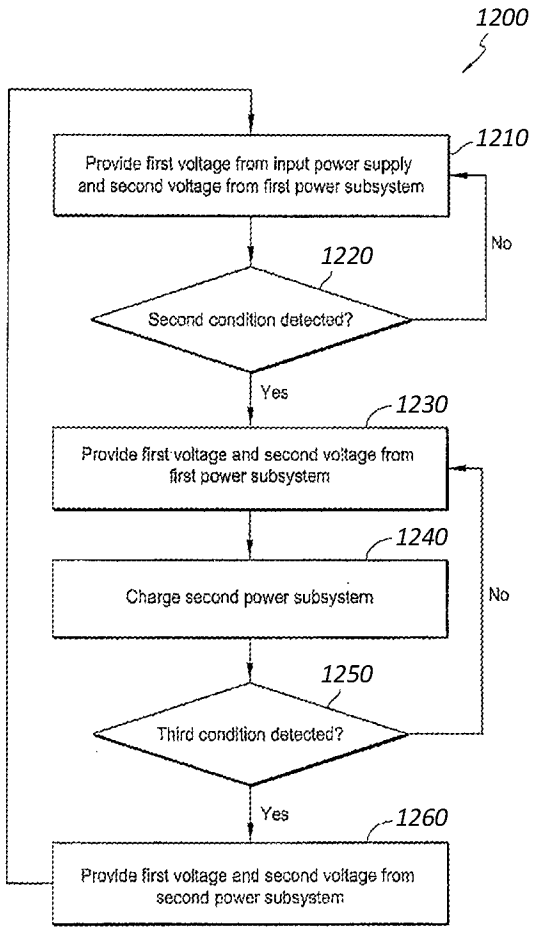
1200
1210
Provide first voltage from input power supply and second voltage from first power subsystem
1220
Second condition detected?
No
Yes
1230
Provide first voltage and second voltage from first power subsystem
1240
Charge second power subsystem
No
1250
Third condition detected?
Yes
1260
Provide first voltage and second voltage from second power subsystem

FIG. 17

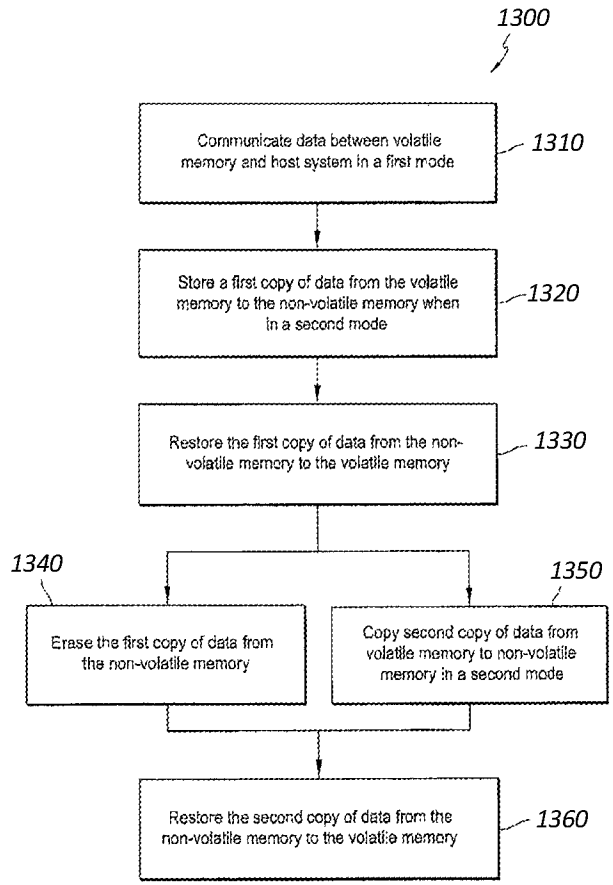
1300
Communicate data between volatile memory and host system in a first mode
1310
Store a first copy of data from the volatile memory to the non-volatile memory when in a second mode
1320
Restore the first copy of data from the non-volatile memory to the volatile memory
1330
1340
Erase the first copy of data from the non-volatile memory
1350
Copy second copy of data from volatile memory to non-volatile memory in a second mode
Restore the second copy of data from the non-volatile memory to the volatile memory
1360

FIG. 18

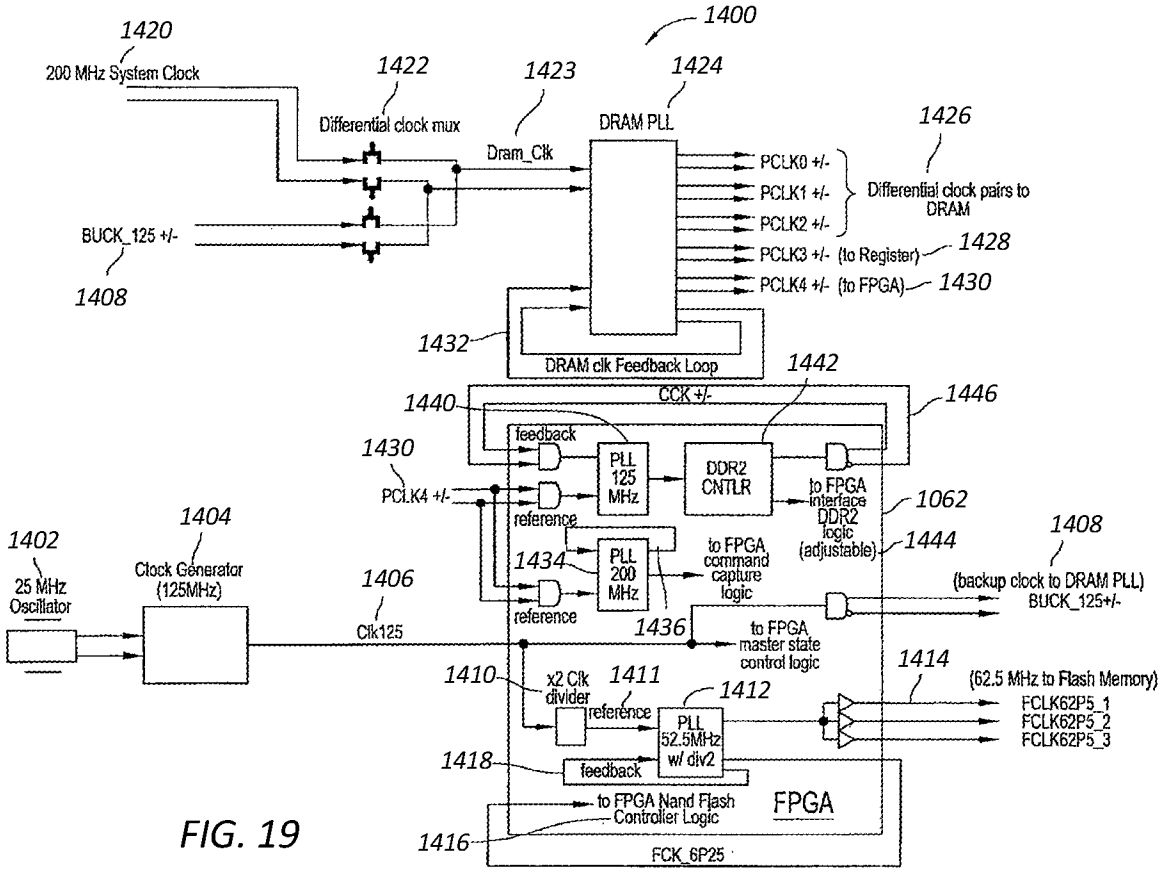
1400
1420
200 MHz System Clock
1422
Differential clock mux
1423
Dram_Clk
1424
DRAM PLL
1426
PCLK0 +/-
PCLK1 +/-
PCLK2 +/-
Differential clock pairs to DRAM
BUCK_125 +/-
1408
PCLK3 +/- (to Register)
1428
PCLK4 +/- (to FPGA)
1430
1432
DRAM clk Feedback Loop
1442
1440
CCK +/-
1446
feedback
1430
PCLK4 +/-
PLL 125 MHz
DDR2 CNTLR
to FPGA interface DDR2 logic (adjustable)
1062
reference
1402
1404
Clock Generator (125MHz)
1434
PLL 200 MHz
to FPGA command capture logic
1444
1408
(backup clock to DRAM PLL) BUCK_125+/-
25 MHz Oscillator
1406
Clk125
reference
1436
to FPGA master state control logic
1410
x2 Clk divider
1411
reference
1412
1414
(62.5 MHz to Flash Memory)
FCLK62P5_1
FCLK62P5_2
FCLK62P5_3
PLL 52.5MHz w/ div2
1418
feedback
to FPGA Nand Flash Controller Logic
FPGA
1416
FCK_6P25

FIG. 19

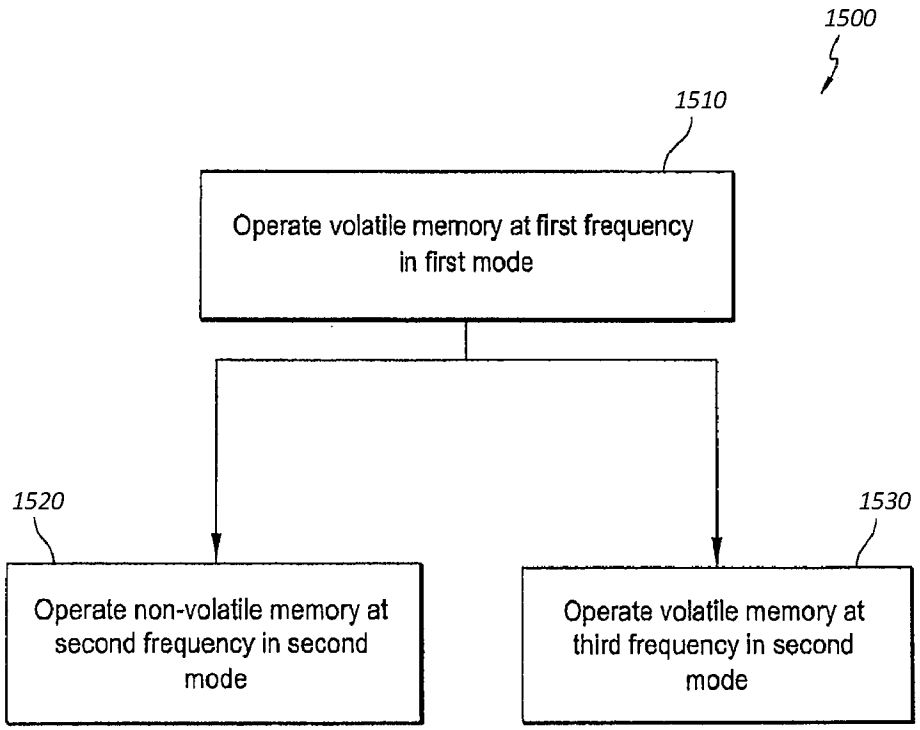
1500
1510
Operate volatile memory at first frequency in first mode
1520
Operate non-volatile memory at second frequency in second mode
1530
Operate volatile memory at third frequency in second mode

FIG. 20

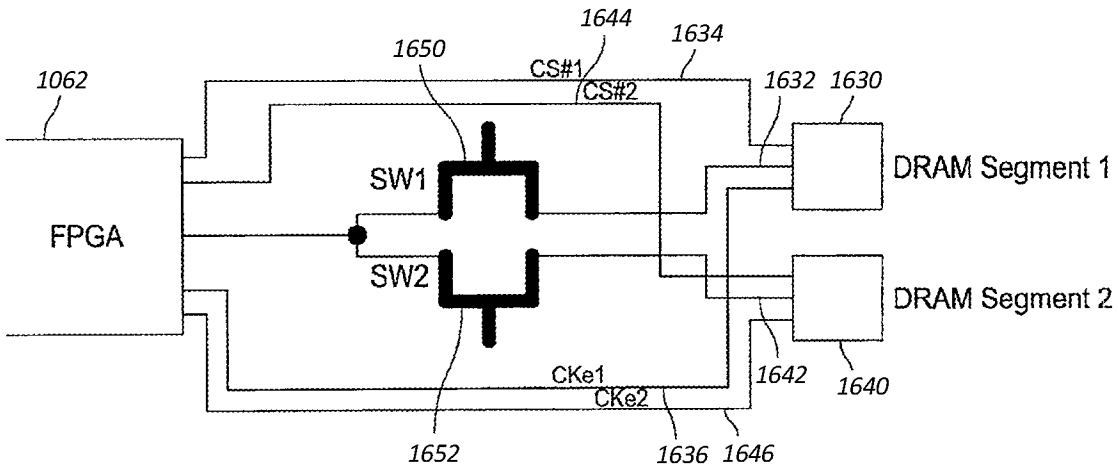
1062
FPGA
1650
SW1
SW2
1652
1644
CS#1
CS#2
1634
1632
1630
DRAM Segment 1
DRAM Segment 2
1642
1640
CKe1
CKe2
1636
1646

FIG. 21

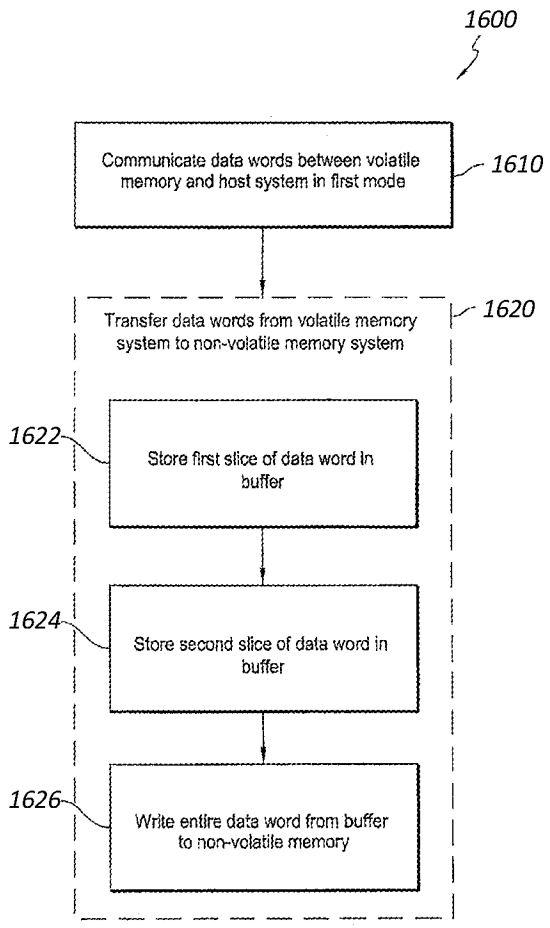
1600
Communicate data words between volatile memory and host system in first mode
1610
Transfer data words from volatile memory system to non-volatile memory system
1620
1622
Store first slice of data word in buffer
1624
Store second slice of data word in buffer
1626
Write entire data word from buffer to non-volatile memory

FIG. 22

FLASH-DRAM HYBRID MEMORY MODULE

PRIORITY CLAIM

This application is a continuation of U.S. patent application Ser. No. 15/934,416, filed Mar. 23, 2018, titled "Flash-Dram Hybrid Memory Module," which is a continuation of U.S. patent application Ser. No. 14/840,865, filed Aug. 31, 2015, titled "Flash-Dram Hybrid Memory Module," now U.S. Pat. No. 9,928,186, which is a continuation of U.S. patent application Ser. No. 14/489,269, filed Sep. 17, 2014, titled "Flash-Dram Hybrid Memory Module," now U.S. Pat. No. 9,158,684, which is a continuation of U.S. patent application Ser. No. 13/559,476, filed Jul. 26, 2012, titled "Flash-Dram Hybrid Memory Module," now U.S. Pat. No. 8,874,831, which claims the benefit of U.S. Provisional Patent Application No. 61/512,871, filed Jul. 28, 2011, and is a continuation-in-part of U.S. patent application Ser. No. 12/240,916, filed Sep. 29, 2008, titled "Non-Volatile Memory Module," now U.S. Pat. No. 8,301,833, which is a continuation of U.S. patent application Ser. No. 12/131,873, filed Jun. 2, 2008, which claims the benefit of U.S. Provisional Patent Application No. 60/941,586, filed Jun. 1, 2007, the contents of all of which are incorporated herein by reference in their entirety.

This application may be considered related to U.S. patent application Ser. No. 14/173,242, titled "Isolation Switching For Backup Of Registered Memory," filed Feb. 5, 2014, which is a continuation of U.S. patent application Ser. No. 13/905,053, titled "Isolation Switching For Backup Of Registered Memory," filed May 29, 2013, now U.S. Pat. No. 8,677,060, issued Mar. 18, 2014, which is a continuation of U.S. patent application Ser. No. 13/536,173, titled "Data Transfer Scheme For Non-Volatile Memory Module," filed Jun. 28, 2012, now U.S. Pat. No. 8,516,187, issued Aug. 20, 2013, which is a divisional of U.S. patent application Ser. No. 12/240,916, titled "Non-Volatile Memory Module," filed Sep. 29, 2008, now U.S. Pat. No. 8,301,833, issued Oct. 30, 2012, which is a continuation of U.S. patent application Ser. No. 12/131,873, filed Jun. 2, 2008, now abandoned, which claims the benefit of U.S. Provisional Application No. 60/941,586, filed Jun. 1, 2007, the contents of which are incorporated by reference herein in their entirety.

This application may also be considered related to U.S. patent application Ser. No. 15/000,834, filed Jan. 19, 2016, which is a continuation of U.S. patent application Ser. No. 14/489,332, filed Sep. 17, 2014, now U.S. Pat. No. 9,269,437, which is a continuation of U.S. patent application Ser. No. 14/173,219, filed Feb. 5, 2014, now U.S. Pat. No. 8,904,099, which is a continuation of U.S. patent application Ser. No. 13/905,048, filed May 29, 2013, now U.S. Pat. No. 6,671,243, which is a continuation U.S. patent application Ser. No. 13/536,173 above.

This application may also be considered related to U.S. patent application Ser. No. 15/924,866, which is a continuation of U.S. patent application Ser. No. 14/489,281, filed Sep. 17, 2014, now U.S. Pat. No. 9,921,762, which is a continuation of U.S. patent application Ser. No. 13/625,563, filed Sep. 24, 2012, now U.S. Pat. No. 8,904,098, which claims the benefit of U.S. Provisional Application No. 61/583,775, filed Sep. 23, 2011.

TECHNICAL FIELD

The present disclosure relates generally to computer memory devices, and more particularly, to devices that

employ different types of memory devices such as combinations of Flash and random access memories.

BACKGROUND

As technology advances and the usage of portable computing devices, such as tablet notebook computers, increases, more data needs to be transferred among data centers and to/from end users. In many cases, data centers are built by clustering multiple servers that are networked to increase performance.

Although there are many types of networked servers that are specific to the types applications envisioned, the basic concept is generally to increase server performance by dynamically allocating computing and storage resources. In recent years, server technology has evolved to be specific to particular applications such as 'finance transactions' (for example, point-of-service, inter-bank transaction, stock market transaction), 'scientific computation' (for example, fluid dynamic for automobile and ship design, weather prediction, oil and gas expeditions), 'medical diagnostics' (for example, diagnostics based on the fuzzy logic, medical data processing), 'simple information sharing and searching' (for example, web search, retail store website, company home page), 'email' (information distribution and archive), 'security service', 'entertainment' (for example, video-on-demand), and so on. However, all of these applications suffer from the same information transfer bottleneck due to the inability of a high speed CPU (central processing unit) to efficiently transfer data in and out of relatively slower speed storage or memory subsystems, particularly since data transfers typically pass through the CPU input/output (I/O) channels.

The data transfer limitations by the CPU are exemplified by the arrangement shown in FIG. **1**, and apply to data transfers between main storage (for example the hard disk (HD) or solid state drive (SSD) and the memory subsystems (for example DRAM DIMM (Dynamic Random Access Memory Dual In-line Memory Module) connected to the front side bus (FSB)). In arrangements such as that of FIG. **1**, the SSD/HD and DRAM DIMM of a conventional memory arrangement are connected to the CPU via separate memory control ports (not shown). FIG. **1** specifically shows, through the double-headed arrow, the data flow path between the computer or server main storage (SSD/HD) to the DRAM DIMMs. Since the SSD/HD data I/O and the DRAM DIMM data I/O are controlled by the CPU, the CPU needs to allocate its process cycles to control these I/Os, which may include the IRQ (Interrupt Request) service which the CPU performs periodically. As will be appreciated, the more time a CPU allocates to controlling the data transfer traffic, the less time the CPU has to perform other tasks. Therefore, the overall performance of a server will deteriorate with the increased amount of time the CPU has to expend in performing data transfer.

There have been various approaches to increase the data transfer throughput rates from/to the main storage, such as SSD/HD, to local storage, such as DRAM DIMM. In one example as illustrated in FIG. **2**, EcoRAM™ developed by Spansion provides a storage SSD based system that assumes a physical form factor of a DIMM. The EcoRAM™ is populated with Flash memories and a relatively small memory capacity using DRAMs which serve as a data buffer. This arrangement is capable of delivering higher throughput rate than a standard SSD based system since the EcoRAM™ is connected to the CPU (central processing unit) via a high speed interface, such as the HT (Hyper

Transport) interface, while an SSD/HD is typically connected via SATA (serial AT attachment), USB (universal serial bus), or PCI Express (peripheral component interface express). For example, the read random access throughput rate of EcoRAM™ is near 3 GB/s compared with 400 MB/s for a NAND SSD memory subsystem using the standard PCI Express-based. This is a 7.5× performance improvement. However, the performance improvement for write random access throughput rate is less than 2×(197 MBs for the EcoRAM vs. 104 MBs for NAND SSD). This is mainly due to the fact that the write speed is cannot be faster than the NAND Flash write access time. FIG. **2** is an example of EcoRAM™ using SSD with the form factor of a standard DIMM such that it can be connected to the FSB (front side bus). However, due to the interface protocol difference between DRAM and Flash, an interface device, EcoRAM Accelerator™), which occupies one of the server's CPU sockets is used, and hence further reducing server's performance by reducing the number of available CPU sockets available, and in turn reducing the overall computation efficiency. The server's performance will further suffer due to the limited utilization of the CPU bus due to the large difference in the data transfer throughput rate between read and write operations.

The EcoRAM™ architecture enables the CPU to view the Flash DIMM controller chip as another processor with a large size of memory available for CPU access.

In general, the access speed of a Flash based system is limited by four items: the read/write speed of the Flash memory, the CPU's FSB bus speed and efficiency, the Flash DIMM controller's inherent latency, and the HT interconnect speed and efficiency which is dependent on the HT interface controller in the CPU and Flash DIMM controller chip.

The published results indicate that these shortcomings are evident in that the maximum throughput rate is 1.56 GBs for the read operation and 104 MBs for the write operation. These access rates are 25% of the DRAM read access speed, and 1.7% of the DRAM access speed at 400 MHz operation. The disparity in the access speed (15 to 1) between the read operation and write operation highlight a major disadvantage of this architecture. The discrepancy of the access speed between this type of architecture and JEDEC standard DRAM DIMM is expected to grow wider as the DRAM memory technology advances much faster than the Flash memory.

Certain types of memory modules comprise a plurality of dynamic random-access memory (DRAM) devices mounted on a printed circuit board (PCB). These memory modules are typically mounted in a memory slot or socket of a computer system (e.g., a server system or a personal computer) and are accessed by the computer system to provide volatile memory to the computer system.

Volatile memory generally maintains stored information only when it is powered. Batteries have been used to provide power to volatile memory during power failures or interruptions. However, batteries may require maintenance, may need to be replaced, are not environmentally friendly, and the status of batteries can be difficult to monitor.

Non-volatile memory can generally maintain stored information while power is not applied to the non-volatile memory. In certain circumstances, it can therefore be useful to backup volatile memory using non-volatile memory.

OVERVIEW

Described herein is a memory module couplable to a memory controller of a host system. The memory module includes a non-volatile memory subsystem, a data manager coupled to the non-volatile memory subsystem, a volatile memory subsystem coupled to the data manager and operable to exchange data with the non-volatile memory subsystem by way of the data manager, and a controller operable to receive commands from the memory controller and to direct (i) operation of the non-volatile memory subsystem, (ii) operation of the volatile memory subsystem, and (iii) transfer of data between any two or more of the memory controller, the volatile memory subsystem, and the non-volatile memory subsystem based on at least one received command from the memory controller.

Also described herein is a method for managing a memory module by a memory controller, the memory module including volatile and non-volatile memory subsystems. The method includes receiving control information from the memory controller, wherein the control information is received using a protocol of the volatile memory subsystem. The method further includes identifying a data path to be used for transferring data to or from the memory module using the received control information, and using a data manager and a controller of the memory module to transfer data between any two or more of the memory controller, the volatile memory subsystem, and the non-volatile memory subsystem based on at least one of the received control information and the identified data path.

Also described herein is a memory module wherein the data manager is operable to control one or more of data flow rate, data transfer size, data buffer size, data error monitoring, and data error correction in response to receiving at least one of a control signal and control information from the controller.

Also described herein is a memory module wherein the data manager controls data traffic between any two or more of the memory controller, the volatile memory subsystem, and the non-volatile memory subsystem based on instructions received from the controller.

Also described herein is a memory module wherein data traffic control relates to any one or more of data flow rate, data transfer size, data buffer size, data transfer bit width, formatting information, direction of data flow, and the starting time of data transfer.

Also described herein is a memory module wherein the controller configures at least one of a first memory address space of the volatile memory subsystem and a second memory address space of the non-volatile memory subsystem in response to at least one of a received command from the memory controller and memory address space initialization information of the memory module.

Also described herein is a memory module wherein the data manager is configured as a bi-directional data transfer fabric having two or more sets of data ports coupled to any one of the volatile and non-volatile memory subsystems.

Also described herein is a memory module wherein at least one of the volatile and non-volatile memory subsystems comprises one or more memory segments.

Also described herein is a memory module wherein each memory segment comprises at least one memory circuit, memory device, or memory die.

Also described herein is a memory module wherein the volatile memory subsystem comprises DRAM memory.

Also described herein is a memory module wherein the non-volatile memory subsystem comprises flash memory.

Also described herein is a memory module wherein at least one set of data ports is operated by the data manager to

independently and/or concurrently transfer data to or from one or more memory segments of the volatile or non-volatile memory subsystems.

Also described herein is a memory module wherein the data manager and controller are configured to effect data transfer between the memory controller and the non-volatile memory subsystem in response to memory access commands received by the controller from the memory controller.

Also described herein is a memory module wherein the volatile memory subsystem is operable as a buffer for the data transfer between the memory controller and non-volatile memory.

Also described herein is a memory module wherein the data manager further includes a data format module configured to format data to be transferred between any two or more of the memory controller, the volatile memory subsystem, and the non-volatile memory subsystem based on control information received from the controller.

Also described herein is a memory module wherein the data manager further includes a data buffer for buffering data delivered to or from the non-volatile memory subsystem.

Also described herein is a memory module wherein the controller is operable to perform one or more of memory address translation, memory address mapping, address domain conversion, memory access control, data error correction, and data width modulation between the volatile and non-volatile memory subsystems.

Also described herein is a memory module wherein the controller is configured to effect operation with the host system in accordance with a prescribed protocol.

Also described herein is a memory module wherein the prescribed protocol is selected from one or more of DDR, DDR2, DDR3, and DDR4 protocols.

Also described herein is a memory module wherein the controller is operable to configure memory space in the memory module based on at least one of a command received from the memory controller, a programmable value written into a register, a value corresponding to a first portion of the volatile memory subsystem, a value corresponding to a first portion of the non-volatile memory subsystem, and a timing value.

Also described herein is a memory module wherein the controller configures the memory space of the memory module using at least a first portion of the volatile memory subsystem and a first portion of the non-volatile memory subsystem, and the controller presents a unified memory space to the memory controller.

Also described herein is a memory module wherein the controller configures the memory space in the memory module using partitioning instructions that are application-specific.

Also described herein is a memory module wherein the controller is operable to copy booting information from the non-volatile to the volatile memory subsystem during power up.

Also described herein is a memory module wherein the controller includes a volatile memory control module, a non-volatile memory control module, data manager control module, a command interpreter module, and a scheduler module.

Also described herein is a memory module wherein commands from the volatile memory control module to the volatile memory subsystem are subordinated to commands from the memory controller to the controller.

Also described herein is a memory module wherein the controller effects pre-fetching of data from the non-volatile to the volatile memory.

Also described herein is a memory module wherein the pre-fetching is initiated by the memory controller writing an address of requested data into a register of the controller.

Also described herein is a memory module wherein the controller is operable to initiate a copy operation of data of a closed block in the volatile memory subsystem to a target block in the non-volatile memory subsystem.

Also described herein is a memory module wherein, if the closed block is re-opened, the controller is operable to abort the copy operation and to erase the target block from the non-volatile memory subsystem.

Also described herein is a method for managing a memory module wherein the transfer of data includes a bidirectional transfer of data between the non-volatile and the volatile memory subsystems.

Also described herein is a method for managing a memory module further comprising operating the data manager to control one or more of data flow rate, data transfer size, data width size, data buffer size, data error monitoring, data error correction, and the starting time of the transfer of data.

Also described herein is a method for managing a memory module further comprising operating the data manager to control data traffic between the memory controller and at least one of the volatile and non-volatile memory subsystems.

Also described herein is a method for managing a memory module wherein data traffic control relates to any one or more of data transfer size, formatting information, direction of data flow, and the starting time of the transfer of data.

Also described herein is a method for managing a memory module wherein data traffic control by the data manager is based on instructions received from the controller.

Also described herein is a method for managing a memory module further comprising operating the data manager as a bi-directional data transfer fabric with two or more sets of data ports coupled to any one of the volatile and non-volatile memory subsystems.

Also described herein is a method for managing a memory module wherein at least one of the volatile and non-volatile memory subsystems comprises one or more memory segments.

Also described herein is a method for managing a memory module wherein each memory segment comprises at least one memory circuit, memory device, or memory die.

Also described herein is a method for managing a memory module wherein the volatile memory subsystem comprises DRAM memory.

Also described herein is a method for managing a memory module wherein the non-volatile memory subsystem comprises Flash memory.

Also described herein is a method for managing a memory module further comprising operating the data ports to independently and/or concurrently transfer data to or from one or more memory segments of the volatile or non-volatile memory subsystems.

Also described herein is a method for managing a memory module further comprising directing transfer of data bi-directionally between the volatile and non-volatile memory subsystems using the data manager and in response to memory access commands received by the controller from the memory controller.

Also described herein is a method for managing a memory module further comprising buffering the data transferred between the memory controller and non-volatile memory subsystem using the volatile memory subsystem.

Also described herein is a method for managing a memory module further comprising using the controller to perform one or more of memory address translation, memory address mapping, address domain conversion, memory access control, data error correction, and data width modulation between the volatile and non-volatile memory subsystems.

Also described herein is a method for managing a memory module further comprising using the controller to effect communication with a host system by the volatile memory subsystem in accordance with a prescribed protocol.

Also described herein is a method for managing a memory module wherein the prescribed protocol is selected from one or more of DDR, DDR2, DDR3, and DDR4 protocols.

Also described herein is a method for managing a memory module further comprising using the controller to configure memory space in the memory module based on at least one of a command received from the memory controller, a programmable value written into a register, a value corresponding to a first portion of the volatile memory subsystem, a value corresponding to a first portion of the non-volatile memory subsystem, and a timing value.

Also described herein is a method for managing a memory module wherein the controller configures the memory space of the memory module using at least a first portion of the volatile memory subsystem and a first portion of the non-volatile memory subsystem, and the controller presents a unified memory space to the memory controller.

Also described herein is a method for managing a memory module wherein the controller configures the memory space in the memory module using partitioning instructions that are application-specific.

Also described herein is a method for managing a memory module further comprising using the controller to copy booting information from the non-volatile to the volatile memory subsystem during power up.

Also described herein is a method for managing a memory module wherein the controller includes a volatile memory control module, the method further comprising generating commands by the volatile memory control module in response to commands from the memory controller, and transmitting the generated commands to the volatile memory subsystem.

Also described herein is a method for managing a memory module further comprising pre-fetching of data from the non-volatile memory subsystem to the volatile memory subsystem.

Also described herein is a method for managing a memory module wherein the pre-fetching is initiated by the memory controller writing an address of requested data into a register of the controller.

Also described herein is a method for managing a memory module further comprising initiating a copy operation of data of a closed block in the volatile memory subsystem to a target block in the non-volatile memory subsystem.

Also described herein is a method for managing a memory module further comprising aborting the copy operation when the closed block of the volatile memory subsystem is re-opened, and erasing the target block in the non-volatile memory subsystem.

Also described herein is a memory system having a volatile memory subsystem, a non-volatile memory subsystem, a controller coupled to the non-volatile memory subsystem, and a circuit coupled to the volatile memory subsystem, to the controller, and to a host system. In a first mode of operation, the circuit is operable to selectively isolate the controller from the volatile memory subsystem, and to selectively couple the volatile memory subsystem to the host system to allow data to be communicated between the volatile memory subsystem and the host system. In a second mode of operation, the circuit is operable to selectively couple the controller to the volatile memory subsystem to allow data to be communicated between the volatile memory subsystem and the nonvolatile memory subsystem using the controller, and the circuit is operable to selectively isolate the volatile memory subsystem from the host system.

Also described herein is a method for operating a memory system. The method includes coupling a circuit to a host system, a volatile memory subsystem, and a controller, wherein the controller is coupled to a non-volatile memory subsystem. In a first mode of operation that allows data to be communicated between the volatile memory subsystem and the host system, the circuit is used to (i) selectively isolate the controller from the volatile memory subsystem, and (ii) selectively couple the volatile memory subsystem to the host system. In a second mode of operation that allows data to be communicated between the volatile memory subsystem and the nonvolatile memory subsystem via the controller, the circuit is used to (i) selectively couple the controller to the volatile memory subsystem, and (ii) selectively isolate the volatile memory subsystem from the host system.

Also described herein is a nontransitory computer readable storage medium storing one or more programs configured to be executed by one or more computing devices. The programs, when executing on the one or more computing devices, cause a circuit that is coupled to a host system, to a volatile memory subsystem, and to a controller that is coupled to a nonvolatile memory subsystem, to perform a method in which, in a first mode of operation that allows data to be communicated between the volatile memory subsystem and the host system, operating the circuit to (i) selectively isolate the controller from the volatile memory subsystem, and (ii) selectively couple the volatile memory subsystem to the host system. In a second mode of operation that allows data to be communicated between the volatile memory subsystem and the nonvolatile memory subsystem via the controller, operating the circuit to (i) selectively couple the controller to the volatile memory subsystem, and (ii) selectively isolate the volatile memory subsystem from the host system.

BRIEF DESCRIPTION OF THE DRAWINGS

The accompanying drawings, which are incorporated into and constitute a part of this specification, illustrate one or more examples of embodiments and, together with the description of example embodiments, serve to explain the principles and implementations of the embodiments.

In the drawings:

FIG. **1** is a block diagram illustrating the path of data transfer, via a CPU, of a conventional memory arrangement;

FIG. **2** is a block diagram of a known EcoRAM™ architecture;

FIGS. **3**A and **3**B are block diagrams of a non-volatile memory DIMM or NVDIMM;

FIGS. **4**A and **4**B are block diagrams of a Flash-DRAM hybrid DIMM or FDHDIMM;

FIG. **5**A is a block diagram of a memory module **500** in accordance with certain embodiments described herein;

FIG. **5**B is a block diagram showing some functionality of a memory module such as that shown in FIG. **5**A;

FIG. **6** is a block diagram showing some details of the data manager (DMgr);

FIG. **7** is a functional block diagram of the on-module controller (CDC);

FIG. **8**A is a block diagram showing more details of the prior art Flash-DRAM hybrid DIMM (FDHDIMM) of FIGS. **4**A and **4**B;

FIG. **8**B is a block diagram of a Flash-DRAM hybrid DIMM (FDHDIMM) in accordance with certain embodiments disclosed herein;

FIG. **9** is a flow diagram directed to the transfer of data from Flash memory to DRAM memory and vice versa in an exemplary FDHDIMM;

FIG. **10** is a block diagram showing an example of mapping of DRAM address space to Flash memory address space; and

FIG. **11** is a table showing estimates of the maximum allowed closed blocks in a queue to be written back to Flash memory for different DRAM densities using various average block use time.

FIG. **12** is a block diagram of an example memory system compatible with certain embodiments described herein.

FIG. **13** is a block diagram of an example memory module with ECC (error-correcting code) having a volatile memory subsystem with nine volatile memory elements and a non-volatile memory subsystem with five non-volatile memory elements in accordance with certain embodiments described herein.

FIG. **14** is a block diagram of an example memory module having a microcontroller unit and logic element integrated into a single device in accordance with certain embodiments described herein.

FIGS. **15**A-**15**C schematically illustrate example embodiments of memory systems having volatile memory subsystems comprising registered dual in-line memory modules in accordance with certain embodiments described herein.

FIG. **16** schematically illustrates an example power module of a memory system in accordance with certain embodiments described herein.

FIG. **17** is a flowchart of an example method of providing a first voltage and a second voltage to a memory system including volatile and non-volatile memory subsystems.

FIG. **18** is a flowchart of an example method of controlling a memory system operatively coupled to a host system and which includes at least 100 percent more storage capacity in non-volatile memory than in volatile memory.

FIG. **19** schematically illustrates an example clock distribution topology of a memory system in accordance with certain embodiments described herein.

FIG. **20** is a flowchart of an example method of controlling a memory system operatively coupled to a host system, the method including operating a volatile memory subsystem at a reduced rate in a back-up mode.

FIG. **21** schematically illustrates an example topology of a connection to transfer data slices from two DRAM segments of a volatile memory subsystem of a memory system to a controller of the memory system.

FIG. **22** is a flowchart of an example method of controlling a memory system operatively coupled to a host system, the method including backing up and/or restoring a volatile memory subsystem in slices.

DESCRIPTION OF EXAMPLE EMBODIMENTS

Example embodiments are described herein in the context of a system of computers, servers, controllers, memory modules, hard disk drives and software. Those of ordinary skill in the art will realize that the following description is illustrative only and is not intended to be in any way limiting. Other embodiments will readily suggest themselves to such skilled persons having the benefit of this disclosure. Reference will now be made in detail to implementations of the example embodiments as illustrated in the accompanying drawings. The same reference indicators will be used to the extent possible throughout the drawings and the following description to refer to the same or like items.

In the interest of clarity, not all of the routine features of the implementations described herein are shown and described. It will, of course, be appreciated that in the development of any such actual implementation, numerous implementation-specific decisions must be made in order to achieve the developer's specific goals, such as compliance with application- and business-related constraints, and that these specific goals will vary from one implementation to another and from one developer to another. Moreover, it will be appreciated that such a development effort might be complex and time-consuming, but would nevertheless be a routine undertaking of engineering for those of ordinary skill in the art having the benefit of this disclosure.

In accordance with this disclosure, the components, process steps, and/or data structures described herein may be implemented using various types of operating systems, computing platforms, computer programs, and/or general purpose machines. In addition, those of ordinary skill in the art will recognize that devices of a less general purpose nature, such as hardwired devices, field programmable gate arrays (FPGAs), application specific integrated circuits (ASICs), or the like, may also be used without departing from the scope and spirit of the inventive concepts disclosed herein. Where a method comprising a series of process steps is implemented by a computer or a machine and those process steps can be stored as a series of instructions readable by the machine, they may be stored on a tangible medium such as a computer memory device (e.g., ROM (Read Only Memory), PROM (Programmable Read Only Memory), EEPROM (Electrically Eraseable Programmable Read Only Memory), Flash memory, Jump Drive, and the like), magnetic storage medium (e.g., tape, magnetic disk drive, and the like), optical storage medium (e.g., CD-ROM, DVD-ROM, paper card, paper tape and the like) and other types of program memory.

The term "exemplary" where used herein is intended to mean "serving as an example, instance or illustration." Any embodiment described herein as "exemplary" is not necessarily to be construed as preferred or advantageous over other embodiments.

Disclosed herein are arrangements for improving memory access rates and addressing the high disparity (15 to 1 ratio) between the read and write data throughput rates. In one arrangement, a Flash-DRAM-hybrid DIMM (FDHDIMM) with integrated Flash and DRAM is used. Methods for controlling such an arrangement are described.

In certain embodiments, the actual memory density (size or capacity) of the DIMM and/or the ratio of DRAM memory to Flash memory are configurable for optimal use with a particular application (for example, POS, inter-bank transaction, stock market transaction, scientific computation such as fluid dynamics for automobile and ship design, weather prediction, oil and gas expeditions, medical diagnostics such as diagnostics based on the fuzzy logic, medical data processing, simple information sharing and searching such as web search, retail store website, company home

page, email or information distribution and archive, security service, and entertainment such as video-on-demand).

In certain embodiments, the device contains a high density Flash memory with a low density DRAM, wherein the DRAM is used as a data buffer for read/write operation. The Flash serves as the main memory. Certain embodiments described herein overcome the needs of having a long separation period between an Activate command (may be referred to as RAS) and a corresponding read or write command (may be referred to as first CAS command).

In accordance with one embodiment, described with reference to FIGS. **3**A and **3**B, a memory system **300** includes a non-volatile (for example Flash) memory subsystem **302** and a volatile (for example DRAM) memory subsystem **304**. The examples of FIGS. **3**A and **3**B are directed to architectures of a non-volatile DIMM (NVDIMM) NVDIMM system that may use a power subsystem (not shown) that can include a battery or a capacitor as a means for energy storage to copy DRAM memory data into Flash memory when power loss occurs, is detected, or is anticipated to occur during operation. When normal power is restored, a restore NVDIMM operation is initiated and the data stored in the Flash memory is properly restored to the DRAM memory. In this architecture, the density of the Flash is about the same as the DRAM memory size or within a few multiples, although in some applications it may be higher. This type of architecture may also be used to provide non-volatile storage that is connected to the FSB (front side bus) to support RAID (Redundant Array of Independent Disks) based systems or other type of operations. An NVDIMM controller **306** receives and interprets commands from the system memory controller hub (MCH). The NVDIMM controller **306** control the NVDIMM DRAM and Flash memory operations. In FIG. **3**A, the DRAM **304** communicates data with the MCH, while an internal bus **308** is used for data transfer between the DRAM and Flash memory subsystems. In FIG. **3**B, the NVDIMM controller **306'** of NVDIMM **300'** monitors events or commands and enables data transfer to occur in a first mode between the DRAM **304'** and Flash **302'** or in a second mode between the DRAM and the MCH.

In accordance with one embodiment, a general architecture for a Flash and DRAM hybrid DIMM (FDHDIMM) system **400** is shown in FIG. **4**A. The FDHDIMM interfaces with an MCH (memory controller hub) to operate and behave as a high density DIMM, wherein the MCH interfaces with the non-volatile memory subsystem (for example Flash) **402** is controlled by an FDHDIMM controller **404**. Although the MCH interfaces with the Flash via the FDHDIMM controller, the FDHDIMM overall performance is governed by the Flash access time. The volatile memory subsystem (for example DRAM) **406** is primarily used as a data buffer or a temporary storage location such that data from the Flash memory **402** is transferred to the DRAM **406** at the Flash access speed, and buffered or collected into the DRAM **406**, which then transfers the buffered data to the MCH based on the access time of DRAM. Similarly, when the MCH transfers data to the DRAM **406**, the FDHDIMM controller **404** manages the data transfer from the DRAM **406** to the Flash **402**. Since the Flash memory access speed (both read and write) is relatively slower than DRAM, (e.g. for example a few hundred microseconds for read access), the average data throughput rate of FDHDIMM **400** is limited by the Flash access speed. The DRAM **406** serves as a data buffer stage that buffers the MCH read or write data. Thus, the DRAM **406** serves as a temporary storage for the data to be transferred from/to the Flash **402**. Furthermore, in accordance with one embodiment, the MCH recognizes the physical density of an FDHDIMM operating as a high density DIMM as the density of Flash alone.

In accordance with one embodiment, a read operation can be performed by the MCH by sending an activate command (may be simply referred to as RAS, or row address strobe) to the FDHDIMM **400** to conduct a pre-fetch read data operation from the Flash **402** to the DRAM **406**, with the pre-fetch data size being for example a page (1 KB or 2 KB, or may be programmable to any size). The MCH then sends a read command (may be simply referred to as CAS, or column address strobe) to read the data out input of the DRAM. In this embodiment, the data transfer from Flash to DRAM occurs at Flash access speed rates, while data transfer from DRAM to MCH occurs at DRAM access speed rates. In this example, data latency and throughput rates are the same as any DRAM operation as long as the read operations are executed onto the pages that were opened with the activate command previously sent to pre-fetch data from the Flash to DRAM. Thus, a longer separation time period between the RAS (e.g. Activate command) and the first CAS (column address strobe e.g. read or write command) is required to account for the time it takes to pre-fetch data from the Flash to DRAM.

An example of FDHDIMM operating as a DDR DIMM with SSD is shown in FIG. **4**B, wherein the FDHDIMM **400'** supports two different interface interpretations to the MCH. In the first interface interpretation, the MCH views the FDHDIMM **400'** as a combination of DRAM DIMM and SSD (not illustrated). In this mode the MCH needs to manage two address spaces, one for the DRAMs **402'** and one for the Flash **404'**. The MCH is coupled to, and controls, both of the DRAM and Flash memory subsystems. One advantage of this mode is that the CPU does not need to be in the data path when data is moved from DRAM to Flash or from Flash to DRAM. In the second interface interpretation, the MCH views the FDHDIMM **400'** as an on-DIMM Flash with the SSD in an extended memory space that is behind the DRAM space. Thus, in this mode, the MCH physically fetches data from the SSD to the DDR DRAM and then the DRAM sends the data to the MCH. Since all data movement occurs on the FDHDIMM, this mode will provide better performance than if the data were to be moved through or via the CPU.

In accordance with one embodiment and as shown in FIG. **4**B, the FDHDIMM **400'** receives control signals **408** from the MCH, where the control signals may include one or more control signals specifically for the DRAM **402'** operation and one or more control signals specifically for the Flash **404'** operation. In this embodiment, the MCH or CPU is coupled to the FDHDIMM via a single data bus interface **410** which couples the MCH to the DRAM.

FIGS. **5**A and **5**B are block diagrams of a memory module **500** that is couplable to a host system (not shown). The host system may be a server or any other system comprising a memory system controller or an MCH for providing and controlling the read/write access to one or more memory systems, wherein each memory system may include a plurality of memory subsystems, a plurality of memory devices, or at least one memory module. The term "read/write access" means the ability of the MCH to interface with a memory system or subsystem in order to write data into it or read data from it, depending on the particular requirement at a particular time.

In certain embodiments, memory module **500** is a Flash-DRAM hybrid memory subsystem which may be integrated with other components of a host system. In certain embodiments, memory module **500** is a Flash-DRAM hybrid

memory module that has the DIMM (dual-inline memory module) form factor, and may be referred to as a FDHDIMM, although it is to be understood that in both structure and operation it may be different from the FDHDIMM discussed above and described with reference to FIGS. **4**A and **4**B. Memory module **500** includes two on-module intermediary components: a controller and a data manager. These on-module intermediary components may be physically separate components, circuits, or modules, or they may be integrated onto a single integrated circuit or device, or integrated with other memory devices, for example in a three dimensional stack, or in any one of several other possible expedients for integration known to those skilled in the art to achieve a specific design, application, or economic goal. In the case of a DIMM, these on-module intermediary components are an on-DIMM Controller (CDC) **502** and an on-DIMM data manager (DMgr) **504**. While the DIMM form factor will predominate the discussion herein, it should be understood that this is for illustrative purposes only and memory systems using other form factors are contemplated as well. CDC **502** and data manager DMgr **504** are operative to manage the interface between a non-volatile memory subsystem such as a Flash **506**, a volatile memory subsystem such as a DRAM **508**, and a host system represented by MCH **510**.

In certain embodiments, CDC **502** controls the read/write access to/from Flash memory **506** from/to DRAM memory **508**, and to/from DRAM memory from/to MCH **510**.

Read/write access between DRAM **508**, Flash **506** and MCH **510** may be referred to herein generally as communication, wherein control and address information C/A **560** is sent from MCH **510** to CDC **502**, and possible data transfers follow as indicated by Data **550**, Data **555**, and/or Data **556**. In certain embodiments, the CDC **502** performs specific functions for memory address transformation, such as address translation, mapping, or address domain conversion, Flash access control, data error correction, manipulation of data width or data formatting or data modulation between the Flash memory and DRAM, and so on. In certain embodiments, the CDC **502** ensures that memory module **500** provides transparent operation to the MCH in accordance with certain industry standards, such as DDR, DDR2, DDR3, DDR4 protocols. In the arrangement shown in FIGS. **5**A and **5**B, there is no direct access from the MCH **510** to the Flash **506** memory subsystem. Thus in accordance with certain embodiments, the Flash access speed has minimal impact on the overall FDHDIMM access speed. In the schematic illustration of FIG. **5**B and in accordance with one embodiment, the CDC controller **502** receives standard DDR commands from the MCH, interprets, and produces commands and/or control signals to control the operation of the Data manager (DMgr), the Flash memory and the DRAM memory. The DMgr controls the data path routing amongst DRAMs, Flash and MCH, as detailed below. The data path routing control signals are independently operated without any exclusivity.

An exemplary role of DMgr **504** is described with reference to FIG. **6**. In certain embodiments and in response to communication from CDC **502**, DMgr **504** provides a variety of functions to control data flow rate, data transfer size, data buffer size, data error monitoring or data error correction. For example, these functions or operations can be performed on-the-fly (while data is being transferred via the DMgr **504**) or performed on buffered or stored data in DRAM or a buffer. In addition, one role of DMgr **504** is to provide interoperability among various memory subsystems or components and/or MCH **510**.

In one embodiment, an exemplary host system operation begins with initialization. The CDC **502** receives a first command from the MCH **510** to initialize FDHDIMM **500** using a certain memory space. The memory space as would be controlled by MCH **510** can be configured or programmed during initialization or after initialization has completed. The MCH **510** can partition or parse the memory space in various ways that are optimized for a particular application that the host system needs to run or execute. In one embodiment, the CDC **502** maps the actual physical Flash **506** and DRAM **508** memory space using the information sent by MCH **510** via the first command. In one embodiment, the CDC **502** maps the memory address space of any one of the Flash **506** and DRAM **508** memory subsystems using memory address space information that is received from the host system, stored in a register within FDHDIMM **500**, or stored in a memory location of a non-volatile memory subsystem, for example a portion of Flash **506** or a separate non-volatile memory subsystem. In one embodiment, the memory address space information corresponds to a portion of initialization information of the FDHDIMM **500**.

In one embodiment, MCH **510** may send a command to restore a certain amount of data information from Flash **506** to DRAM **508**. The CDC **502** provides control information to DMgr **504** to appropriately copy the necessary information from Flash **506** to the DRAM **508**. This operation can provide support for various host system booting operations and/or a special host system power up operation.

In one embodiment, MCH **510** sends a command which may include various fields comprising control information regarding data transfer size, data format options, and/or startup time. CDC **502** receives and interprets the command and provides control signals to DMgr **504** to control the data traffic between the Flash **506**, the DRAM **508**, and the MCH **510**. For example, DMgr **504** receives the data transfer size, formatting information, direction of data flow (via one or more multiplexers such as **611**, **612**, **621**, **622** as detailed below), and the starting time of the actual data transfer from CDC **502**. DMgr **504** may also receive additional control information from the CDC **502** to establish a data flow path and/or to correctly establish the data transfer fabric. In certain embodiments, DMgr **504** also functions as a bi-directional data transfer fabric. For example, DMgr **504** may have more than 2 sets of data ports facing the Flash **506** and the DRAM **508**. Multiplexers **611** and **612** provide controllable data paths from any one of the DRAMs **508**(**1**) and **508**(**2**) (DRAM-A and DRAM-B) to any one of the MCH **510** and the Flash **506**. Similarly multiplexers **621** and **622** provide controllable data paths from any one of the MCH and the Flash memory to any one of the DRAMs **508**(**1**) and **508**(**2**) (DRAM-A and DRAM-B). In one embodiment, DRAM **508**(**1**) is a segment of DRAM **508**, while in other embodiments, DRAM **508**(**1**) is a separate DRAM memory subsystem. It will be understood that each memory segment can comprise one or more memory circuits, a memory devices, and/or memory integrated circuits. Of course other configurations for DRAM **508** are possible, and other data transfer fabrics using complex data paths and suitable types of multiplexing logic are contemplated.

In accordance with one embodiment, the two sets of multiplexors **611**, **612** and **621**, **622** allow independent data transfer to Flash **506** from DRAM-A **508**(**1**) and DRAM-B **508**(**2**). For example, in response to one or more control signals or a command from CDC **502**, DMgr **504** can transfer data from DRAM-A **508**(**1**) to MCH **510**, via multiplexer **611**, at the same time as from DRAM-B **508**(**2**)

to the Flash **506**, via multiplexer **612**; or data is transferred from DRAM-B **508**(**2**) to MCH **510**, via multiplexer **611**, and simultaneously data is transferred from the Flash **506** to DRAM-A **508**(**1**), via multiplexer **621**. Further, in the same way that data can be transferred to or from the DRAM in both device-wide or segment-by-segment fashion, data can be transferred to or from the flash memory in device-wide or segment-by-segment fashion, and the flash memory can be addressed and accessed accordingly.

In accordance with one embodiment the illustrated arrangement of data transfer fabric of DMgr **504** also allows the CDC **502** to control data transfer from the Flash memory to the MCH by buffering the data from the Flash **506** using a buffer **602**, and matching the data rate and/or data format of MCH **510**. The buffer **602** is shown in FIG. **6** as a portion of a data format module **604**; however, buffer **602** may also be a distributed buffer such that one buffer is used for each one of the set of multiplexer logic elements shown as multiplexers **611**, **612**, **621**, and **622**. Various buffer arrangements may be used, such as a programmable size buffer to meet the requirement of a given system design requirement, for example the disparity between read/write access time; or overall system performance, for example latency. In certain embodiments, the buffer **604** may introduce one or more clock cycle delays into a data communication path between MCH **510**, DRAM **508**, and Flash **506**.

In certain embodiments, data format module **604** contains a data formatting subsystem (not shown) to enable DMgr **504** to format and perform data transfer in accordance with control information received from CDC**502**. Data buffer **604** of data format module **602**, discussed above, also supports a wide data bus **606** coupled to the Flash memory **506** operating at a first frequency, while receiving data from DRAM **508** using a relatively smaller width data bus **608** operating at a second frequency, the second frequency being larger than the first frequency in certain embodiments. The buffer **602** is designed to match the data flow rate between the DRAM **508** and the Flash **506**.

A register **690** provides the ability to register commands received from MCH **510** via C/A **560** (FIG. **5**A). The register **690** may communicate these commands to CDC **502** and/or to the DRAM **508** and/or Flash **506**. The register **690** communicates these registered commands to CDC **502** for processing. The register **690** may also include multiple registers (not shown), such that it can provide the ability to register multiple commands, a sequence of commands, or provide a pipeline delay stage for buffering and providing a controlled execution of certain commands received form MCH **510**.

In certain embodiments, the register **690** may register commands from MCH **510** and transmit the registered commands to DRAM **508** and/or Flash **506** memory subsystems. In certain embodiments, the CDC **502** monitors commands received from MCH **510**, via control and address bus C/A **560**, and provides appropriate control information to DMgr **504**, DRAM **508**, or Flash **506** to execute these commands and perform data transfer operations between MCH **510** and FDHDIMM **500** via MCH data bus **610**.

FIG. **7** illustrates a functional block diagram of the CDC **502**. In certain embodiments, the major functional blocks of the CDC **502** are a DRAM control block DRAMCtrl **702**, Flash control block FlashCtrl **704**, MCH command interpreter Cmdlnt **706**, DRAM-Flash interface scheduler Scheduler **708**, and DMgr control block (DMgrCtrl) **710**.

In accordance with one embodiment, DRAMCtrl **702** generates DRAM commands that are independent from the commands issued by the MCH **510**. In accordance with one embodiment, when the MCH **510** initiates a read/write operation from/to the same DRAM **508** that is currently executing a command from the DRAMCtrl **702**, then the CDC **502** may choose to instruct DRAMCtrl **702** to abort its operation in order to execute the operation initiated by the MCH. However, the CDC **502** may also pipeline the operation so that it causes DRAMCtrl **702** to either halt or complete its current operation prior to executing that of the MCH. The CDC **502** may also instruct DRAMCtrl **702** to resume its operation once the command from MCH **510** is completed.

In accordance with one embodiment, the FlashCtrl **704** generates appropriate Flash commands for the proper read/write operations. The Cmdlnt **706** intercepts commands received from MCH **510** and generates the appropriate control information and control signals and transmit them to the appropriate FDHDIMM functional block. For example, Cmdlnt **706** issues an interrupt signal to the DRAMCtrl **702** when the MCH issues a command that collides (conflicts) with the currently executing or pending commands that DRAMCtrl **702** has initiated independently from MCH **510**, thus subordinating these commands to those from the MCH. The Scheduler **708** schedules the Flash-DRAM interface operation such that there is no resource conflict in the DMgr **504**. In accordance with one embodiment, the Scheduler **708** assigns time slots for the DRAMCtrl **702** and FlashCtrl **704** operation based on the current status and the pending command received or to be received from the MCH. The DMgrCtrl **710** generates and sends appropriate control information and control signals for the proper operation and control of the data transfer fabric to enable or disable data paths between Flash **506**, DRAM **508**, and the MCH **510**.

FIG. **8**A is a block diagram showing a Flash-DRAM hybrid DIMM (FDHDIMM). As seen from FIG. **8**A, this Flash-DRAM hybrid DIMM requires two separate and independent address buses to separately control the address spaces: one for the Flash memory Flash **506** and the other for the DRAM memory DRAM **508**. The MCH treats the DRAM **508** and Flash **506** as separate memory subsystems, for example DRAM and SSD/HD memory subsystems. The memory in each address space is controlled directly by the MCH. However, the on-DIMM data path between Flash **506** and DRAM **508** allows for direct data transfer to occur between the Flash **506** and the DRAM **508** in response to control information from Ctrl **502**. In this embodiment, this data transfer mechanism provides direct support for executing commands from the MCH without having the MCH directly controlling the data transfer, and thus improving data transfer performance from Flash **506** to the DRAM **508**. However, the MCH needs to manage two address spaces and two different memory protocols simultaneously. Moreover, the MCH needs to map the DRAM memory space into the Flash memory space, and the data interface time suffers due to the difference in the data access time between the Flash memory and the DRAM memory.

In accordance with one embodiment, a memory space mapping of a Flash-DRAM hybrid DIMM is shown in FIG. **8**B. A memory controller of a host system (not shown) controls both of the DRAM **508** address space and the Flash **506** address space using a single unified address space. The CDC **502** receives memory access commands from the MCH and generates control information for appropriate mapping and data transfer between Flash and DRAM memory subsystem to properly carry out the memory access commands. In one embodiment, the memory controller of the host system views the large Flash memory space as a DRAM memory space, and accesses this unified memory

space with a standard DDR (double data rate) protocol used for accessing DRAM. The unified memory space in this case can exhibit overlapping memory address space between the Flash **506** and the DRAM **508**. The overlapping memory address space may be used as a temporary storage or buffer for data transfer between the Flash **506** and the DRAM **508**. For example, the DRAM memory space may hold a copy of data from the selected Flash memory space such that the MCH can access this data normally via DDR memory access commands. The CDC **502** controls the operation of the Flash **506** and DRAM **508** memory subsystems in response to commands received from a memory controller of a host system.

In one embodiment, the unified memory space corresponds to a contiguous address space comprising a first portion of the address space of the Flash **506** and a first portion of the address space of the DRAM **508**. The first portion of the address space of the Flash **506** can be determined via a first programmable register holding a first value corresponding to the desired Flash memory size to be used. Similarly, the first portion of the address space of the DRAM **508** can be determined via a second programmable register holding a second value corresponding to the desired DRAM memory size to be used. In one embodiment, any one of the first portion of the address space of the Flash **506** and the first portion of the address space of the DRAM **508** is determined via a first value corresponding to a desired performance or memory size, the first value being received by the CDC **502** via a command sent by memory controller of the host system.

In accordance with one embodiment, a flow diagram directed to the transfer of data from Flash memory to DRAM memory and vice versa in an exemplary FDHDIMM is shown in FIG. **9**. In certain embodiments, data transfer from the Flash **506** to the DRAM **508** occurs in accordance with memory access commands which the CDC **502** receives from the memory controller of the host system. In certain embodiments, the CDC **502** controls the data transfer from the DRAM **508** to the Flash **506** so as to avoid conflict with any memory operation that is currently being executed. For example, when all the pages in a particular DRAM memory block are closed. The CDC **502** partitions the DRAM memory space into a number of blocks for the purpose of optimally supporting the desired application. The controller can configure memory space in the memory module based on at least one of one or more commands received from the MCH, instructions received from the MCH, a programmable value written into a register, a value corresponding to a first portion of the volatile memory subsystem, a value corresponding to a first portion of the non-volatile memory subsystem, and a timing value. Furthermore, the block size can be configurable by the memory controller of the host system, such that the number pages in a block can be optimized to support a particular application or a task. Furthermore, the block size may be configured on-the-fly, e.g. CDC **502** can receive instruction regarding a desired block size from the memory controller via a memory command, or via a programmable value.

In certain embodiments, a memory controller can access the memory module using a standard access protocol, such as JEDEC's DDR DRAM, by sending a memory access command to the CDC **502** which in turn determines what type of a data transfer operation it is and the corresponding target address where the data information is stored, e.g. data information is stored in the DRAM **508** or Flash **506** memory subsystems. In response to a read operation, if the CDC **502** determines that data information, e.g. a page (or block), does not reside in the DRAM **508** but resides in Flash **506**, then the CDC **502** initiates and controls all necessary data transfer operations from Flash **506** to DRAM **508** and subsequently to the memory controller. In one embodiment, once the CDC **502** completes the data transfer operation of the requested data information from the Flash **506** to the DRAM **508**, the CDC **502** alerts the memory controller to retrieve the data information from the DRAM **508**. In on embodiment, the memory controller initiates the copying of data information from Flash **506** to DRAM **508** by writing, into a register in the CDC **502**, the target Flash address along with a valid block size. The CDC **502** in turn, executes appropriate operations and generates control information to copy the data information to the DRAM **508**. Consequently, the memory controller can access or retrieve the data information using standard memory access commands or protocol.

An exemplary flow chart is shown in FIG. **9**, a starting step or power up **902**, is followed by an initialization step **904**, the memory controller initiates, at step **906**, a data move from the Flash **506** to the DRAM **508** by writing target address and size, to a control register in the CDC **502**, which then copies, at **908**, data information from the Flash **506** to the DRAM **508** and erases the block in the Flash. Erasing the data information from Flash may be accomplished independently from (or concurrently with) other steps that CDC **502** performs in this flow chart, i.e. other steps can be executed concurrently with the Erase the Flash block step. Once the data information or a block of data information is thus moved to the DRAM **508**, the memory controller can operate on this data block using standard memory access protocol or commands at **910**. The CDC **502** checks, at **912**, if any of the DRAM **508** blocks, or copied blocks, are closed. If the memory controller closed any open blocks in DRAM **508**, then the CDC **502** initiate a Flash write to write the closed block from the DRAM **508** to the Flash **506**, at **914**. In addition, the memory controller, at **916**, reopens the closed block that is currently being written into the Flash **506**, then the CDC **502** stops the Flash write operation and erases the Flash block which was being written to, as shown at **918**. Otherwise, the CDC **502** continues and completes the writing operation to the Flash at **920**.

The dashed lines in FIG. **9** indicate independent or parallel activities that can be performed by the CDC **502**. At any time the CDC **502** receives a DRAM load command from a memory controller which writes a Flash target address and/or block size information into the RC register(s) at **922**, as described above, then the CDC **502** executes a load DRAM w/RC step **906** and initiates another branch (or a thread) of activities that includes steps **908-922**. In one embodiment, the CDC **502** controls the data transfer operations between DRAM **508** and Flash **506** such that the Flash **506** is completely hidden from the memory controller. The CDC **502** monitors all memory access commands sent by the memory controller using standard DRAM protocol and appropriately configures and manipulate both Flash **506** and DRAM **508** memory subsystems to perform the requested memory access operation and thus achieve the desired results. The memory controller does not interface directly with the Flash memory subsystem. Instead, the memory controller interfaces with the CDC **502** and/or DMgr **504** as shown in FIG. **5** and FIG. **6**. Moreover, the memory controller may use one or more protocol, such as DDR, DDR2, DDR3, DDR4 protocols or the like.

In accordance with one embodiment, an example of mapping a DRAM address space to Flash memory address space is shown in FIG. **10**. Two sets (**1002**, **1004**) of address

bits AD**6** to AD**17**, forming a 24 bit extended memory page address, are allocated for the block address. For example, assuming a Block size of 256K Bytes, then a 24-bit block address space (using the two sets of AD**6** to AD**17** **1002** and **1004**) would enable access to 4 TB of Flash memory storage space. If a memory module has 1 GB of DRAM storage capacity, then it can hold approximately 4K Blocks of data in the DRAM memory, each Block comprise 256 K Bytes of data. The DRAM address space, corresponding to the 4K blocks, can be assigned to different virtual ranks and banks, where the number of virtual ranks and banks is configurable and can be manipulated to meet a specific design or performance needs. For example, if a 1G Bytes memory module is configured to comprise two ranks with eight banks per rank, then each bank would hold two hundred fifty (**250**) blocks or the equivalent of 62 M Bytes or 62K pages, where each page correspond to a 1K Bytes. Other configurations using different page, block, banks, or ranks numbers may also be used. Furthermore, an exemplary mapping of 24-bit DDR DIMM block address to Flash memory address, using Block addressing as described above, is shown in FIG. **10**. The 24-bit can be decomposed into fields, such as a logical unit number LUN address **1061** field, a Block address **1051** field, a Plane address **1041**, a Page address **1031**, and a group of least significant address bits A_0A_1 **1021**. The Plane address **1041** is a sub address of the block address, and it may be used to support multiple page IO so as to improve Flash memory subsystem operation. In this example, it is understood that different number of bits may be allocated to each field of the 24-bit

The CDC **502** manages the block write-back operation by queuing the blocks that are ready to be written back to the Flash memory. As described above, if any page in a queued block for a write operation is reopened, then the CDC **502** will stop the queued block write operation, and remove the block from the queue. Once all the pages in a block are closed, then the CDC **502** restarts the write-back operation and queue the block for a write operation.

In accordance with one embodiment, an exemplary read operation from Flash **506** to DRAM **508** can be performed in approximately 400 μs, while a write operation from DRAM **508** to Flash **506** can be performed in approximately 22 ms resulting in a read to write ratio of 55 to 1. Therefore, if the average time a host system's memory controller spends accessing data information in a Block of DRAM is about 22 ms (that is the duration that a Block comprises one or more pages that are open), then the block write-back operation from DRAM to Flash would not impact performance and hence the disparity between read and write access may be completely hidden from the memory controller. If the block usage time is 11 ms instead of 22 ms, then the CDC **502** control the data transfer operation between DRAM **508** and Flash **506** such that there are no more than 9 closed blocks in the queue to be written-back to the Flash memory, hence approximately an average of 100 ms can be maintained for a standard DDR DRAM operation. Moreover, the number of closed Blocks in the queue to be written-back to the Flash memory subsystem varies with the average block usage time and the desired performance for a specific host system or for a specific application running using the host system resources.

Consequently, the maximum number of closed Blocks to be written-back to Flash can be approximated to be

((# of blocks per bank)/(ratio of 'Flash_block_write-_time' to 'Flash_read_time'))*((Block usage time)/('Flash_block_write_time'))

In order to maintain less than 100 ms time period for queued write-back Blocks, then using a Flash memory subsystem having 22 ms write access time per Block would results in a maximum number of four Blocks to be queued for write operation to Flash **506**. Therefore, on average approximately 88 ms (=22 ms*4) for blocks means that each bank should not have more than four Blocks that need to be written back to the Flash **506**.

The above equation also indicates that bigger DRAM memory space can support shorter block usage times. For example, 2 GB of DRAM memory allows the 8 closed blocks to be written-back to Flash. The table in FIG. **11** provides an estimation of the maximum allowed closed blocks in the queue to be written back to the Flash memory for different DRAM density using various average block use time.

Certain embodiments described herein include a memory system which can communicate with a host system such as a disk controller of a computer system. The memory system can include volatile and non-volatile memory, and a controller. The controller backs up the volatile memory using the non-volatile memory in the event of a trigger condition. Trigger conditions can include, for example, a power failure, power reduction, request by the host system, etc. In order to power the system in the event of a power failure or reduction, the memory system can include a secondary power source which does not comprise a battery and may include, for example, a capacitor or capacitor array.

In certain embodiments, the memory system can be configured such that the operation of the volatile memory is not adversely affected by the non-volatile memory or by th controller when the volatile memory is interacting with the host system. For example, one or more isolation devices may isolate the non-volatile memory and the controller from the volatile memory when the volatile memory is interacting with the host system and may allow communication between the volatile memory and the non-volatile memory when the data of the volatile memory is being restored or backed-up. This configuration generally protects the operation of the volatile memory when isolated while providing backup and restore capability in the event of a trigger condition, such as a power failure.

In certain embodiments described herein, the memory system includes a power module which provides power to the various components of the memory system from different sources based on a state of the memory system in relation to a trigger condition (e.g., a power failure). The power module may switch the source of the power to the various components in order to efficiently provide power in the event of the power failure. For example, when no power failure is detected, the power module may provide power to certain components, such as the volatile memory, from system power while charging a secondary power source (e.g., a capacitor array). In the event of a power failure or other trigger condition, the power module may power the volatile memory elements using the previously charged secondary power source.

In certain embodiments, the power module. transitions relatively smoothly from powering the volatile memory with system power to powering it with the secondary power source. For example, the power system may power volatile memory with a third power source from the time the memory system detects that power failure is likely to occur until the time the memory system detects that the power failure has actually occurred.

In certain embodiments, the volatile memory system can be operated at a reduced frequency during backup and/or

restore operations which can improve the efficiency of the system and save power. In some embodiments, during backup and/or restore operations, the volatile memory communicates with the non-volatile memory by writing and/or. reading data words in bit-wise slices instead of by writing entire words at once. In certain embodiments, when each slice is being written to or read from the volatile memory the unused slice(s) of volatile memory is not active, which can reduce the power consumption of the system.

In yet other embodiments, the non-volatile memory can include at least 100 percent more storage capacity than the volatile memory. This configuration can allow the memory system to efficiently handle subsequent trigger conditions.

FIG. **12** is a block diagram of an example memory system **1010** compatible with certain embodiments described herein. The memory system **1010** can be coupled to a host computer system and can include a volatile memory subsystem **1030**, a non-volatile memory subsystem **1040**, and a controller **1062** operatively coupled to the non-volatile memory subsystem **1040**. In certain embodiments, the memory system **1010** includes at least one circuit **1052** configured to selectively operatively decouple the controller **1062** from the volatile memory subsystem **1030**.

In certain embodiments, the memory system **1010** comprises a memory module. The memory system **1010** may comprise a printed-circuit board (PCB) **1020**. In certain embodiments, the memory system **1010** has a memory capacity of 512-MB, 1-GB, 2-GB, 4-GB, or 8-GB. Other volatile memory capacities are also compatible with certain embodiments described herein. In certain embodiments, the memory system **10** has a non-volatile memory capacity of 512-MB, 1-GB, 2-GB, 4-GB, 8-GB, 16-GB, or 32-GB. Other non-volatile memory capacities are also compatible with certain embodiments described herein. In addition, memory systems **1010** having widths of 4 bytes, 8 bytes, 16 bytes, 32 bytes, or 32 bits, 64 bits, 128 bits, 256 bits, as well as other widths (in bytes or in bits), are compatible with embodiments described herein. In certain embodiments, the PCB **1020** has an industry-standard form factor. For example, the PCB **1020** can have a low profile (LP) form factor with a height of 30 millimeters and a width of 133.35 millimeters. In certain other embodiments, the PCB **1020** has a very high profile (VHP) form factor with a height of 50 millimeters or more. In certain other embodiments, the PCB **1020** has a very low profile (VLP) form factor with a height of 18.3 millimeters. Other form factors including, but not limited to, small-outline (SO-DIMM), unbuffered (UDIMM), registered (RDIMM), fully-buffered (FB-DIMM), miniDIMM, mini-RDIMM, VLP mini-DIMM, micro-DIMM, and SRAM DIMM are also compatible with certain embodiments described herein. For example, in other embodiments, certain non-DIMM form factors are possible such as, for example, single in-line memory module (SIMM), multi-media card (MMC), and small computer system interface (SCSI).

In certain preferred embodiments, the memory system **1010** is in electrical communication with the host system. In other embodiments, the memory system **1010** may communicate with a host system using some other type of communication, such as, for example, optical communication. Examples of host systems include, but are not limited to, blade servers, 1U servers, personal computers (PCs), and other applications in which space is constrained or limited. The memory system **1010** can be in communication with a disk controller of a computer system, for example. The PCB **1020** can comprise an interface **1022** that is configured to be in electrical communication with the host system (not shown). For example, the interface **1022** can comprise a plurality of edge connections which fit into a corresponding slot connector of the host system. The interface **1022** of certain embodiments provides a conduit for power voltage as well as data, address, and control signals between the memory system **1010** and the host system. For example, the interface **1022** can comprise a standard 240-pin DDR2 edge connector.

The volatile memory subsystem **1030** comprises a plurality of volatile memory elements **1032** and the non-volatile memory subsystem **1040** comprises a plurality of non-volatile memory elements **1042**. Certain embodiments described herein advantageously provide nonvolatile storage via the non-volatile memory subsystem **1040** in addition to high-performance (e.g., high speed) storage via the volatile memory subsystem **1030**. In certain embodiments, the first plurality of volatile memory elements **1032** comprises two or more dynamic random-access memory (DRAM) elements. Types of DRAM elements **1032** compatible with certain embodiments described herein include, but are not limited to, DDR, DDR2, DDR3, and synchronous DRAM (SDRAM). For example, in the block diagram of FIG. **12**, the first memory bank **1030** comprises eight 64M×8 DDR2 SDRAM elements **1032**. The volatile memory elements **1032** may comprise other types of memory elements such as static random-access memory (SRAM). In addition, volatile memory elements **1032** having bit widths of 4, 8, 16, 32, as well as other bit widths, are compatible with certain embodiments described herein. Volatile memory elements **1032** compatible with certain embodiments described herein have packaging which include, but are not limited to, thin small-outline package (TSOP), ball-grid-array (BGA), fine-pitch BGA (FBOA), micro-BOA (1.1,BGA), mini-BGA (mBGA), and chip-scale packaging (CSP).

In certain embodiments, the second plurality of non-volatile memory elements **1042** comprises one or more flash memory elements. Types of flash memory elements **1042** compatible with certain embodiments described herein include, but are not limited to, NOR flash, NAND flash, ONE-NAND flash, and multi-level cell (MLC). For example, in the block diagram of FIG. **12**, the second memory bank **1040** comprises 512 MB of flash memory organized as four 128 Mb×8 NAND flash memory elements **1042**. In addition, nonvolatile memory elements **1042** having bit widths of 4, 8, 16, 32, as well as other bit widths, are compatible with certain embodiments described herein. Non-volatile memory elements **1042** compatible with certain embodiments described herein have packaging which include, but are not limited to, thin small-outline package (TSOP), ball-grid-array (BOA), fine-pitch BOA (FBGA), micro-BOA (POA), mini-BGA (mBGA), and chip-scale packaging (CSP).

FIG. **13** is a block diagram of an example memory module **10** with ECC (error-correcting code) having a volatile memory subsystem **1030** with nine volatile memory elements **1032** and a non-volatile memory subsystem **1040** with five non-volatile memory elements **1042** in accordance with certain embodiments described herein. The additional memory element **1032** of the first memory bank **1030** and the additional memory element **1042** of the second memory bank **1040** provide the ECC capability. In certain other embodiments, the volatile memory subsystem **1030** comprises other numbers of volatile memory elements **1032** (e.g., 2, 3, 4, 5, 6, 7, more than 9). In certain embodiments, the non-volatile memory subsystem **1040** comprises other numbers of nonvolatile memory elements **1042** (e.g., 2, 3, more than 5).

Referring to FIG. **12**, in certain embodiments, the logic element **1070** comprises a field-programmable gate array (FPGA). In certain embodiments, the logic element **1070** comprises an FPGA available from Lattice Semiconductor Corporation which includes an internal flash. In certain other embodiments, the logic element **1070** comprises an FPOA available from another vendor. The internal flash can improve the speed of the memory system **1010** and save physical space. Other types of logic elements **1070** compatible with certain embodiments described herein include, but are not limited to, a programmable-logic device (PLD), an application-specific integrated circuit (ASIC), a custom-designed semiconductor device, a complex programmable logic device (CPLD). In certain embodiments, the logic element **1070** is a custom device. In certain embodiments, the logic element **1070** comprises various discrete electrical elements, while in certain other embodiments, the logic element **1070** comprises one or more integrated circuits. FIG. **14** is a block diagram of an example memory module **1010** having a microcontroller unit **1060** and logic element **1070** integrated into a single controller **1062** in accordance with certain embodiments described herein. In certain embodiments, the controller **1062** includes one or more other components. For example, in one embodiment, an FPGA without an internal flash is used and the controller **1062** includes a separate flash memory component which stores configuration information to program the FPGA.

In certain embodiments, the at least one circuit **1052** comprises one or more switches coupled to the volatile memory subsystem **1030**, to the controller **1062**, and to the host computer (e.g., via the interface **1022**, as schematically illustrated by FIGS. **12-14**). The one or more switches are responsive to signals (e.g., from the controller **1062**) to selectively operatively decouple the controller **1062** from the volatile memory subsystem **1030** and to selectively operatively couple the controller **1062** to the volatile memory subsystem **1030**. In addition, in certain embodiments, the at least one circuit **1052** selectively operatively couples and decouples the volatile memory subsystem **1030** and the host system.

In certain embodiments, the volatile memory subsystem **1030** can comprise a registered DIMM subsystem comprising one or more registers **1160** and a plurality of DRAM elements **1180**, as schematically illustrated by FIG. **15**A. In certain such embodiments, the at least one circuit **1052** can comprise one or more switches **1172** coupled to the controller **1062** (e.g., logic element **1070**) and to the volatile memory subsystem **1030** which can be actuated to couple and decouple the controller **1062** to and from the volatile memory subsystem **1030**, respectively. The memory system **1010** further comprises one or more switches **1170** coupled to the one or more registers **1160** and to the plurality of DRAM elements **1180** as schematically illustrated by FIG. **15**A. The one or more switches **1170** can be selectively switched, thereby selectively operatively coupling the volatile memory subsystem **1030** to the host system **1150**. In certain other embodiments, as schematically illustrated by FIG. **15**B, the one or more switches **1174** are also coupled to the one or more registers **1160** and to a power source **1162** for the one or more registers **1160**. The one or more switches **1174** can be selectively switched to turn power on or off to the one or more registers **1160**, thereby selectively operatively coupling the volatile memory subsystem **1030** to the host system **1150**. As schematically illustrated by FIG. **15**C, in certain embodiments the at least one circuit **1052** comprises a dynamic on-die termination (ODT) **1176** circuit of the logic element **1070**. For example, the logic element **1070** can comprise a dynamic ODT circuit **1176** which selectively operatively couples and decouples the logic element **1070** to and from the volatile memory subsystem **1030**, respectively. In addition, and similar to the example embodiment of FIG. **15**A described above, the one or more switches **1170** can be selectively switched, thereby selectively operatively coupling the volatile memory subsystem **1030** to the host system **1150**.

Certain embodiments described herein utilize the non-volatile memory subsystem **1040** as a flash "mirror" to provide backup of the volatile memory subsystem **1030** in the event of certain system conditions. For example, the non-volatile memory subsystem **1040** may backup the volatile memory subsystem **1030** in the event of a trigger condition, such as, for example, a power failure or power reduction or a request from the host system. In one embodiment, the nonvolatile memory subsystem **1040** holds intermediate data results in a noisy system environment when the host computer system is engaged in a long computation. In certain embodiments, a backup may be performed on a regular basis. For example, in one embodiment, the backup may occur every millisecond in response to a trigger condition. In certain embodiments, the trigger condition occurs when the memory system **1010** detects that the system voltage is below a certain threshold voltage. For example, in one embodiment, the threshold voltage is **1010** percent below a specified operating voltage. In certain embodiments, a trigger condition occurs when the voltage goes above a certain threshold value, such as, for example, **1010** percent above a specified operating voltage. In some embodiments, a trigger condition occurs when the voltage goes below a threshold or above another threshold. In various embodiments, a backup and/or restore operation may occur in reboot and/or non-reboot trigger conditions.

As schematically illustrated by FIGS. **12** and **13**, in certain embodiments, the controller **1062** may comprise a microcontroller unit (MCU) **1060** and a logic element **1070**. In certain embodiments, the MCU **1060** provides memory management for the non-volatile memory subsystem **1040** and controls data transfer between the volatile memory subsystem **30** and the nonvolatile memory subsystem **1040**. The MCU **1060** of certain embodiments comprises a 16-bit microcontroller, although other types of microcontrollers are also compatible with certain embodiments described herein. As schematically illustrated by FIGS. **12** and **13**, the logic element **1070** of certain embodiments is in electrical communication with the non-volatile memory subsystem **1040** and the MCU **1060**. The logic element **1070** can provide signal level translation between the volatile memory elements **1032** (e.g., 1.8V SSTL-2 for DDR2 SDRAM elements) and the non-volatile memory elements **1042** (e.g., 3V TTL for NAND flash memory elements). In certain embodiments, the logic element **1070** is also programmed to perform address/address translation between the volatile memory subsystem **1030** and the non-volatile memory subsystem **1040**. In certain preferred embodiments, 1-NAND type flash are used for the non-volatile memory elements **1042** because of their superior read speed and compact structure.

The memory system **1010** of certain embodiments is configured to be operated in at least two states. The at least two states can comprise a first state in which the controller **1062** and the non-volatile memory subsystem **1040** are operatively decoupled (e.g., isolated) from the volatile memory subsystem **1030** by the at least one circuit **1052** and a second state in which the volatile memory subsystem **1030** is operatively coupled to the controller **1062** to allow data to

be communicated between the volatile memory subsystem **1030** and the nonvolatile memory subsystem **1040** via the controller **1062**. The memory system **1010** may transition from the first state to the second state in response to a trigger condition, such as when the memory system **1010** detects that there is a power interruption (e.g., power failure or reduction) or a system hang-up.

The memory system **1010** may further comprise a voltage monitor **1050**. The voltage monitor circuit **1050** monitors the voltage supplied by the host system via the interface **1022**. Upon detecting a low voltage condition (e.g., due to a power interruption to the host system), the voltage monitor circuit **1050** may transmit a signal to the controller **1062** indicative of the detected condition. The controller **1062** of certain embodiments responds to the signal from the voltage monitor circuit **1050** by transmitting a signal to the at least one circuit **1052** to operatively couple the controller to the volatile memory system **1030**, such that the memory system **1010** enters the second state. For example, the voltage monitor **1050** may send a signal to the MCU **1060** which responds by accessing the data on the volatile memory system **1030** and by executing a write cycle on the nonvolatile memory subsystem **1040**. During this write cycle, data is read from the volatile memory subsystem **1030** and is transferred to the non-volatile memory subsystem **1040** via the MCU **1060**. In certain embodiments, the voltage monitor circuit **1050** is part of the controller **1062** (e.g., part of the MCU **1060**) and the voltage monitor circuit **1050** transmits a signal to the other portions of the controller **1062** upon detecting a power threshold condition.

The isolation or operational decoupling of the volatile memory subsystem **1030** from the non-volatile memory subsystem in the first state can preserve the integrity of the operation of the memory system **1010** during periods of operation in which signals (e.g., data) are transmitted between the host system and the volatile memory subsystem **1030**. For example, in one embodiment during such periods of operation, the controller **1062** and the nonvolatile memory subsystem **1040** do not add a significant capacitive load to the volatile memory system **1030** when the memory system **1010** is in the first state. In certain such embodiments, the capacitive load of the controller **1062** and the non-volatile memory subsystem **1040** do not significantly affect the signals propagating between the volatile memory subsystem **1030** and the host system. This can be particularly advantageous in relatively high-speed memory systems where loading effects can be significant. In one preferred embodiment, the at least one circuit **1052** comprises an FSA1208 Low-Power, Eight-Port, Hi-Speed Isolation Switch from Fairchild Semiconductor. In other embodiments, the at least one circuit **1052** comprises other types of isolation devices.

Power may be supplied to the volatile memory subsystem **1030** from a first power supply (e.g., a system power supply) when the memory system **1010** is in the first state and from a second power supply **1080** when the memory system **1010** is in the second state. In certain embodiments, the memory system **1010** is in the first state when no trigger condition (e.g., a power failure) is present and the memory system **1010** enters the second state in response to a trigger condition. In certain embodiments, the memory system **1010** has a third state in which the controller **1062** is operatively decoupled from the volatile memory subsystem **1030** and power is supplied to the volatile memory subsystem **1030** from a third power supply (not shown). For example, in one embodiment the third power supply may provide power to the volatile memory subsystem **1030** when the memory system **1010** detects that a trigger condition is likely to occur but has not yet occurred.

In certain embodiments, the second power supply **1080** does not comprise a battery. Because a battery is not used, the second power supply **1080** of certain embodiments may be relatively easy to maintain, does not generally need to be replaced, and is relatively environmentally friendly. In certain embodiments, as schematically illustrated by FIGS. **12-14**, the second power supply **1080** comprises a step-up transformer **1082**, a step-down transformer **1084**, and a capacitor bank **1086** comprising one or more capacitors (e.g., double-layer capacitors). In one example embodiment, capacitors may take about three to four minutes to charge and about two minutes to discharge. In other embodiments, the one or more capacitors may take a longer time or a shorter time to charge and/or discharge. For example, in certain embodiments, the second power supply **1080** is configured to power the volatile memory subsystem **1030** for less than thirty minutes. In certain embodiments, the second power supply **1080** may comprise a battery. For example, in certain embodiments, the second power supply **1080** comprises a battery and one or more capacitors and is configured to power the volatile memory subsystem **1030** for no more than thirty minutes.

In certain embodiments, the capacitor bank **1086** of the second power supply **1080** is charged by the first power supply while the memory system **1010** is in the first state. As a result, the second power supply **1080** is fully charged when the memory system **1010** enters the second state. The memory system **1010** and the second power supply **1080** may be located on the same printed circuit board **1020**. In other embodiments, the second power supply **1080** may not be on the same printed circuit board **1020** and may be tethered to the printed circuit board **1020**, for example.

When operating in the first state, in certain embodiments, the step-up transformer **1082** keeps the capacitor bank **1086** charged at a peak value. In certain embodiments, the step-down transformer **1084** acts as a voltage regulator to ensure that regulated voltages are supplied to the memory elements (e.g., 1.8V to the volatile DRAM elements **1032** and 3.0V to the non-volatile flash memory elements **1042**) when operating in the second state (e.g., during power down). In certain embodiments, as schematically illustrated by FIGS. **12-14**, the memory module **1010** further comprises a switch **1090** (e.g., FET switch) that switches power provided to the controller **1062**, the volatile memory subsystem **1030**, and the non-volatile memory subsystem **1040**, between the power from the second power supply **1080** and the power from the first power supply (e.g., system power) received via the interface **1022**. For example, the switch **1090** may switch from the first power supply to the second power supply **1080** when the voltage monitor **1050** detects a low voltage condition. The switch **1090** of certain embodiments advantageously ensures that the volatile memory elements **1032** and non-volatile memory elements **1042** are powered long enough for the data to be transferred from the volatile memory elements **1032** and stored in the non-volatile memory elements **1042**. In certain embodiments, after the data transfer is complete, the switch **1090** then switches back to the first power supply and the controller **1062** transmits a signal to the at least one circuit **1052** to operatively decouple the controller **1062** from the volatile memory subsystem **1030**, such that the memory system **1010** reenters the first state.

When the memory system **1010** re-enters the first state, data may be transferred back from the non-volatile memory

subsystem **1040** to the volatile memory subsystem **1030** via the controller **1062**. The host system can then resume accessing the volatile memory subsystem **1030** of the memory module **1010**. In certain embodiments, after the memory system **1010** enters or re-enters the first state (e.g., after power is restored), the host system accesses the volatile memory subsystem **1030** rather than the non-volatile memory subsystem **1040** because the volatile memory elements **1032** have superior read/write characteristics. In certain embodiments, the transfer of data from the volatile memory bank **1030** to the nonvolatile memory bank **1040**, or from the non-volatile memory bank **1040** to the volatile. memory bank **1030**, takes less than one minute per GB.

In certain embodiments, the memory system **1010** protects the operation of the volatile memory when communicating with the host-system and provides backup and restore capability in the event of a trigger condition such as a power failure. In certain embodiments, the memory system **1010** copies the entire contents of the volatile memory subsystem **1030** into the nonvolatile memory subsystem **1040** on each backup operation. Moreover, in certain embodiments, the entire contents of the non-volatile memory subsystem **1040** are copied back into the volatile memory subsystem **1030** on each restore operation. In certain embodiments, the entire contents of the non-volatile memory subsystem **1040** are accessed for each backup and/or restore operation, such that the non-volatile memory subsystem **1040** (e.g., flash memory subsystem) is used generally uniformly across its memory space and wear-leveling is not performed by the memory system **1010**. In certain embodiments, avoiding wear-leveling can decrease cost and complexity of the memory system **1010** and can improve the performance of the memory system **1010**. In certain other embodiments, the entire contents of the volatile memory subsystem **1030** are not copied into the non-volatile memory subsystem **1040** on each backup operation, but only a partial copy is performed. In certain embodiments, other management capabilities such as bad-block management and error management for the flash memory elements of the non-volatile memory subsystem **1040** are performed in the controller **1062**.

The memory system **1010** generally operates as a write-back cache in certain embodiments. For example, in one embodiment, the host system (e.g., a disk controller) writes data to the volatile memory subsystem **1030** which then writes the data to non-volatile storage which is not part of the memory system **1010**, such as, for example, a hard disk. The disk controller may wait for an acknowledgment signal from the memory system **1010** indicating that the data has been written to the hard disk or is otherwise secure. The memory system **1010** of certain embodiments can decrease delays in the system operation by indicating that the data has been written to the hard disk before it has actually done so. In certain embodiments, the memory system **1010** will still be able to recover the data efficiently in the event of a power outage because of the backup and restore capabilities described herein. In certain other embodiments, the memory system **1010** may be operated as a write-through cache or as some other type of cache.

FIG. **16** schematically illustrates an example power module **1100** of the memory system **1010** in accordance with certain embodiments described herein. The power module **1100** provides power to the various components of the memory system **1010** using different elements based on a state of the memory system **1010** in relation to a trigger condition. In certain embodiments, the power module **1100** comprises one or more of the components described above with respect to FIG. **12**. For example, in certain embodiments, the power module **1100** includes the second power supply **1080** and the switch **1090**.

The power module **1100** provides a plurality of voltages to the memory system **1010** comprising non-volatile and volatile memory subsystems **1030**, **1040**. The plurality of voltages comprises at least a first voltage **1102** and a second voltage **1104**. The power module **1100** comprises an input **1106** providing a third voltage **1108** to the power module **1100** and a voltage conversion element **1120** configured to provide the second voltage **1104** to the memory system **1010**. The power module **1100** further comprises a first power element **1130** configured to selectively provide a fourth voltage **1110** to the conversion element **1120**. In certain embodiments, the first power element **1130** comprises a pulse-width modulation power controller. For example, in one example embodiment, the first power element **1130** is configured to receive a 1.8V input system voltage as the third voltage **1108** and to output a modulated 5V output as the fourth voltage **1110**.

The power module **1100** further comprises a second power element **1140** can be configured to selectively provide a fifth voltage **1112** to the conversion element **1120**. The power module **1100** can be configured to selectively provide the first voltage **1102** to the memory system **1010** either from the conversion element **1120** or from the input **1106**.

The power module **1100** can be configured to be operated in at least three states in certain embodiments. In a first state, the first voltage **1102** is provided to the memory system **1010** from the input **1106** and the fourth voltage **1110** is provided to the conversion element **1120** from the first power element **1130**. In a second state, the fourth voltage **1110** is provided to the conversion element **1120** from the first power element **1130** and the first voltage **1102** is provided to the memory system **1010** from the conversion element **1120**. In the third state, the fifth voltage **1112** is provided to the conversion element **1120** from the second power element **1140** and the first voltage **1104** is provided to the memory system **1010** from the conversion element **1120**.

In certain embodiments, the power module **1100** transitions from the first state to the second state upon detecting that a trigger condition is likely to occur and transitions from the second state to the third state upon detecting that the trigger condition has occurred. For example, the power module **1100** may transition to the second state when it detects that a power failure is about to occur and transitions to the third state when it detects that the power failure has occurred. In certain embodiments, providing the first voltage **1102** in the second state from the first power element **1130** rather than from the input **1106** allows a smoother transition from the first state to the third state. For example, in certain embodiments, providing the first voltage **1102** from the first power element **1130** has capacitive and other smoothing effects. In addition, switching the point of power transition to be between the conversion element **1120** and the first and second power elements **1130**, **1140** (e.g., the sources of the pre-regulated fourth voltage **1110** in the second state and the pre-regulated fifth voltage **1112** in the third state) can smooth out potential voltage spikes.

In certain embodiments, the second power element **1140** does not comprise a battery and may comprise one or more capacitors. For example, as schematically illustrated in FIG. **16**, the second power element **1140** comprises a capacitor array **1142**, a buck-boost converter **1144** which adjusts the voltage for charging the capacitor array and a voltage/current limiter **1146** which limits the charge current to the capacitor array **1142** and stops charging the capacitor array **1142** when it has reached a certain charge voltage. In one

example embodiment, the capacitor array **1142** comprises two 50 farad capacitors capable of holding a total charge of 4.6V. For example, in one example embodiment, the buck-boost converter **1144** receives a 1.8V system voltage (first voltage **1108**) and boosts the voltage to 4.3V which is outputted to the voltage current limiter **1146**. The voltage/current limiter **1146** limits the current going to the capacitor array **1142** to 1A and stops charging the array **1142** when it is charged to 4.3V. Although described with respect to certain example embodiments, one of ordinary skill will recognize from the disclosure herein that the second power element **1140** may include alternative embodiments. For example, different components and/or different value components may be used. For example, in other embodiments, a pure boost converter may be used instead of a buck-boost converter. In another embodiment, only one capacitor may be used instead of a capacitor array **1142**.

The conversion element **1120** can comprise one or more buck converters and/or one or more buck-boost converters. The conversion element **1120** may comprise a plurality of sub-blocks **1122**, **1124**, **1126** as schematically illustrated by FIG. **16**, which can provide more voltages in addition to the second voltage **1104** to the memory system **1010**. The sub-blocks may comprise various converter circuits such as buck-converters, boost converters, and buck-boost converter circuits for providing various voltage values to the memory system **1010**. For example, in one embodiment, sub-block **1122** comprises a buck converter, sub-block **1124** comprises a dual buck converter, and sub-block **1126** comprises a buck-boost converter as schematically illustrated by FIG. **16**. Various other components for the sub-blocks **1122**, **1124**, **1126** of the conversion element **1120** are also compatible with certain embodiments described herein. In certain embodiments, the conversion element **1120** receives as input either the fourth voltage **1110** from the first power element **1130** or the fifth voltage **1112** from the second power element **1140**, depending on the state of the power module **1100**, and reduces the input to an appropriate amount for powering various components of the memory system. For example, the buck-converter of sub-block **1122** can provide 1.8V at 2A for about 60 seconds to the volatile memory elements **1032** (e.g., DRAM), the non-volatile memory elements **1042** (e.g., flash), and the controller **1062** (e.g., an FPGA) in one embodiment. The sub-block **1124** can provide the second voltage **1104** as well as another reduced voltage **1105** to the memory system **1010**. In one example embodiment, the second voltage **1104** is 2.5V and is used to power the at least one circuit **1052** (e.g., isolation device) and the other reduced voltage **1105** is 1.2V and is used to power the controller **1062** (e.g., FPGA). The subblock **1126** can provide yet another voltage **1107** to the memory system **1010**. For example, the voltage **1107** may be 3.3V and may be used to power both the controller **1062** and the at least one circuit **1052**.

Although described with respect to certain example embodiments, one of ordinary skill will recognize from the disclosure herein that the conversion element **1120** may include alternative embodiments. For example, there may be more or less sub-blocks which may comprise other types of converters (e.g., pure boost converters) or which may produce different voltage values. In one embodiment, the volatile memory elements **1032** and nonvolatile memory elements **1042** are powered using independent voltages and are not both powered using the first voltage **1102**.

FIG. **17** is a flowchart of an example method **1200** of providing a first voltage **1102** and a second voltage **1104** to a memory system **1010** including volatile and nonvolatile memory subsystems **1030**, **1040**. While the method **1200** is described herein by reference to the memory system **1010** schematically illustrated by FIGS. **12-15**, other memory systems are also compatible with embodiments of the method **1200**. During a first condition, the method **1200** comprises providing the first voltage **1102** to the memory system **1010** from an input power supply **1106** and providing the second voltage **1104** to the memory system **1010** from a first power subsystem in operational block **1210**. For example, in one embodiment, the first power subsystem comprises the first power element **1130** and the voltage conversion element **1120** described above with respect to FIG. **16**. In other embodiments, other first power subsystems are used.

The method **1200** further comprises detecting a second condition in operational block **1220**. In certain embodiments, detecting the second condition comprises detecting that a trigger condition is likely to occur. During the second condition, the method **1200** comprises providing the first voltage **1102** and the second voltage **1104** to the memory system **1010** from the first power subsystem in an operational block **1230**. For example, referring to FIG. **16**, a switch **1148** can be toggled to provide the first voltage **1102** from the conversion element **1120** rather than from the input power supply.

The method **1200** further comprises charging a second power subsystem in operational block **1240**. In certain embodiments, the second power subsystem comprises the second power element **1140** or another power supply that does not comprise a battery. For example, in one embodiment, the second power subsystem comprises the second power element **1140** and the voltage conversion element **1120** described above with respect to FIG. **16**. In other embodiments, some other second power subsystem is used.

The method **1200** further comprises detecting a third condition in an operational block **1250** and during the third condition, providing the first voltage **1102** and the second voltage **1104** to the memory system **1010** from the second power subsystem **1140** in an operational block **1260**. In certain embodiments, detecting the third condition comprises detecting that the trigger condition has occurred. The trigger condition may comprise various conditions described herein. In various embodiments, for example, the trigger condition comprises a power reduction, power failure, or system hang-up. The operational blocks of the method **1200** may be performed in different orders in various embodiments. For example, in certain embodiments, the second power subsystem **1140** is charged before detecting the second condition.

In certain embodiments, the memory system **1010** comprises a volatile memory subsystem **1030** and a non-volatile memory subsystem **1040** comprising at least 100 percent more storage capacity than does the volatile memory subsystem. The memory system **1010** also comprises a controller **1062** operatively coupled to the volatile memory subsystem **1030** and operatively coupled to the non-volatile memory subsystem **1040**. The controller **1062** can be configured to allow data to be communicated between the volatile memory subsystem **1030** and the host system when the memory system **1010** is operating in a first state and to allow data to be communicated between the volatile memory subsystem **1030** and the non-volatile memory subsystem **1040** when the memory system **1010** is operating in a second state.

Although the memory system **1010** having extra storage capacity of the non-volatile memory subsystem **1040** has been described with respect to certain embodiments, alter-

native configurations exist. For example, in certain embodiments, there may be more than 100 percent more storage capacity in the non-volatile memory subsystem **1040** than in the volatile memory subsystem **1030**. In various embodiments, there may be at least 200, 300, or 400 percent more storage capacity in the non-volatile memory subsystem **1040** than in the volatile memory subsystem **1030**. In other embodiments, the non-volatile memory subsystem **1040** includes at least some other integer multiples of the storage capacity of the volatile memory subsystem **1030**. In some embodiments, the non-volatile memory subsystem **1040** includes a non-integer multiple of the storage capacity of the volatile memory subsystem **1030**. In one embodiment, the non-volatile memory subsystem **1040** includes less than 100 percent more storage capacity than does the volatile memory subsystem **1030**.

The extra storage capacity of the non-volatile memory subsystem **1040** can be used to improve the backup capability of the memory system **1010**. In certain embodiments in which data can only be written to portions of the non-volatile memory subsystem **1040** which do not contain data (e.g., portions which have been erased), the extra storage capacity of the nonvolatile memory subsystem **1040** allows the volatile memory subsystem **1030** to be backed up in the event of a subsequent power failure or other trigger event. For example, the extra storage capacity of the non-volatile memory subsystem **1040** may allow the memory system **1010** to backup the volatile memory subsystem **1030** efficiently in the event of multiple trigger conditions (e.g., power failures). In the event of a first power failure, for example, the data in the volatile memory system **1030** is copied to a first, previously erased portion of the nonvolatile memory subsystem **1040** via the controller **1062**. Since the non-volatile memory subsystem **1040** has more storage capacity than does the volatile memory subsystem **1030**, there is a second portion of the non-volatile memory subsystem **1040** which does not have data from the volatile memory subsystem **1030** copied to it and which remains free of data (e.g., erased). Once system power is restored, the controller **1062** of the memory system **1010** restores the data to the volatile memory subsystem **1030** by copying the backed-up data from the non-volatile memory subsystem **1040** back to the volatile memory subsystem **1030**. After the data is restored, the memory system **1010** erases the non-volatile memory subsystem **1040**. While the first portion of the non-volatile memory subsystem **1040** is being erased, it may be temporarily unaccessible.

If a subsequent power failure occurs before the first portion of the non-volatile memory subsystem **1040** is completely erased, the volatile memory subsystem **1030** can be backed-up or stored again in the second portion of the non-volatile memory subsystem **1040** as described herein. In certain embodiments, the extra storage capacity of the non-volatile memory subsystem **1040** may allow the memory system **1010** to operate more efficiently. For example, because of the extra storage capacity of the non-volatile memory subsystem **1040**, the memory system **1010** can handle a higher frequency of trigger events that is not limited by the erase time of the non-volatile memory subsystem **1040**.

FIG. **18** is a flowchart of an example method **1300** of controlling a memory system **1010** operatively coupled to a host system and which includes a volatile memory subsystem **1030** and a non-volatile memory subsystem **1040**. In certain embodiments, the non-volatile memory subsystem **1040** comprises at least 100 percent more storage capacity than does the volatile memory subsystem **30** as described herein. While the method **1300** is described herein by reference to the memory system **1010** schematically illustrated by FIGS. **12-14**, the method **1300** can be practiced using other memory systems in accordance with certain embodiments described herein. In an operational block **1310**, the method **1300** comprises communicating data between the volatile memory subsystem **1030** and the host system when the memory system **1010** is in a first mode of operation. The method **1300** further comprises storing a first copy of data from the volatile memory subsystem **1030** to the non-volatile memory subsystem **1040** at a first time when the memory system **1010** is in a second mode of operation in an operational block **1320**.

In an operational block **1330**, the method **1300** comprises restoring the first copy of data from the non-volatile memory subsystem **1040** to the volatile memory subsystem **1030**. The method **1300** further comprises erasing the first copy of data from the non-volatile memory subsystem **1040** in an operational block **1340**. The method further comprises storing a second copy of data from the volatile memory subsystem **1030** to the non-volatile memory subsystem **1040** at a second time when the memory system **1010** is in the second mode of operation in an operational block **1350**. Storing the second copy begins before the first copy is completely erased from the non-volatile memory subsystem **1040**.

In some embodiments, the memory system **1010** enters the second mode of operation in response to a trigger condition, such as a power failure. In certain embodiments, the first copy of data and the second copy of data are stored in separate portions of the nonvolatile memory subsystem **1040**. The method **1300** can also include restoring the second copy of data from the non-volatile memory subsystem **1040** to the volatile memory subsystem **1030** in an operational block **1360**. The operational blocks of method **1300** referred to herein may be performed in different orders in various embodiments. For example, in some embodiments, the second copy of data is restored to the volatile memory subsystem **1030** at operational block **1360** before the first copy of data is completely erased in the operational block **1340**.

FIG. **19** schematically illustrates an example clock distribution topology **1400** of a memory system **1010** in accordance with certain embodiments described herein. The clock distribution topology **1400** generally illustrates the creation and routing of the clock signals provided to the various components of the memory system **1010**. A clock source **1402** such as, for example, a 25 MHz oscillator, generates a clock signal. The clock source **1402** may feed a clock generator **1404** which provides a clock signal **1406** to the controller **1062**, which may be an FPGA. In one embodiment, the clock generator **1404** generates a 125 MHz clock signal **1406**. The controller **1062** receives the clock signal **1406** and uses it to clock the controller **1062** master state control logic. For example, the master state control logic may control the general operation of an FPGA controller **1062**.

The clock signal **1406** can also be input into a clock divider **1410** which produces a frequency-divided version of the clock signal **1406**. In an example embodiment, the clock divider **1410** is a divide by two clock divider and produces a 62.5 MHz clock signal in response to the 125 MHz clock signal **1406**. A non-volatile memory phase-locked loop (PLL) block **1412** can be included (e.g., in the controller **1062**) which distributes a series of clock signals to the non-volatile memory subsystem **1040** and to associated control logic. For example, a series of clock signals **1414** can

be sent from the controller **1062** to the non-volatile memory subsystem **1040**. Another clock signal **1416** can be used by the controller logic which is dedicated to controlling the non-volatile memory subsystem **1040**. For example, the clock signal **1416** may clock the portion of the controller **1062** which is dedicated to generating address and/or control lines for the non-volatile memory subsystem **1040**. A feedback clock signal **1418** is fed back into the non-volatile memory PLL block **1412**. In one embodiment, the PLL block **1412** compares the feedback clock **1418** to the reference clock **1411** and varies the phase and frequency of its output until the reference **1411** and feedback **1418** clocks are phase and frequency matched.

A version of the clock signal **1406** such as the backup clock signal **1408** may be sent from the controller to the volatile memory subsystem **1030**. The clock signal **1408** may be, for example, a differential version of the clock signal **1406**. As described herein, the backup clock signal **1408** may be used to clock the volatile memory subsystem **1030** when the memory system **1010** is backing up the data from the volatile memory subsystem **1030** into the non-volatile memory subsystem **1040**. In certain embodiments, the backup clock signal **1408** may also be used to clock the volatile memory subsystem **1030** when the memory system **1010** is copying the backed-up data back into the volatile memory subsystem **1030** from the nonvolatile memory subsystem **1040** (also referred to as restoring the volatile memory subsystem **1030**). The volatile memory subsystem **1030** may normally be run at a higher frequency (e.g., DRAM running at 400 MHz) than the nonvolatile memory subsystem **1040** (e.g., flash memory running at 62.5 MHz) when communicating with the host system (e.g., when no trigger condition is present). However, in certain embodiments the volatile memory subsystem **1030** may be operated at a reduced frequency (e.g., at twice the frequency of the non-volatile memory subsystem **1040**) without introducing significant delay into the system during backup operation and/or restore operations. Running the volatile memory subsystem **1030** at the reduced frequency during a backup and/or restore operation may advantageously reduce overall power consumption of the memory system **1010**.

In one embodiment, the backup clock **1408** and the volatile memory system clock signal **1420** are received by a multiplexer **1422**, as schematically illustrated by FIG. **19**. The multiplexer **1422** can output either the volatile memory system clock signal **1420** or the backup clock signal **1408** depending on the backup state of the memory system **1010**. For example, when the memory system **1010** is not performing a backup or restore operation and is communicating with the host system (e.g., normal operation), the volatile memory system clock signal **1420** may be provided by the multiplexer **422** to the volatile memory PLL block **1424**. When the memory system **1010** is performing a backup (or restore) operation, the backup clock signal **1408** may be provided.

The volatile memory PLL block **1424** receives the volatile memory reference clock signal **1423** from the multiplexer **1422** and can generate a series of clock signals which are distributed to the volatile memory subsystem **1030** and associated control logic. For example, in one embodiment, the PLL block **1424** generates a series of clock signals **1426** which clock the volatile memory elements **1032**. A clock signal **1428** may be used to clock control logic associated with the volatile memory elements, such as one or more registers (e.g., the one or more registers of a registered DIMM). Another clock signal **1430** may be sent to the controller **1062**. A feedback clock signal **1432** is fed back into the volatile memory PLL block **1424**. In one embodiment, the PLL block **1424** compares the feedback clock signal **1432** to the reference clock signal **1423** and varies the phase and frequency of its output until the reference clock signal **1423** and the feedback clock signal **1432** clocks are phase and frequency matched.

The clock signal **1430** may be used by the controller **1062** to generate and distribute clock signals which will be used by controller logic which is configured to control the volatile memory subsystem **1030**. For example, control logic in the controller **1062** may be used to control the volatile memory subsystem **1030** during a backup or restore operation. The clock signal **1430** may be used as a reference clock signal for the PLL block **1434** which can generate one or more clocks **1438** used by logic in the controller **1062**. For example, the PLL block **1434** may generate one or more clock signals **1438** used to drive logic circuitry associated with controlling the volatile memory subsystem **1030**. In certain embodiments, the PLL block **1434** includes a feedback clock signal **1436** and operates in a similar manner to other PLL blocks described herein.

The clock signal **1430** may be used as a reference clock signal for the PLL block **1440** which may generate one or more clock signals used by a sub-block **1442** to generate one or more other clock signals **1444**. In one embodiment, for example, the volatile memory subsystem **1030** comprises DDR2 SDRAM elements and the sub-block **1442** generates one or more DDR2 compatible clock signals **1444**. A feedback clock signal **1446** is fed back into the PLL block **1440**. In certain embodiments, the PLL block **1440** operates in a similar manner to other PLL blocks described herein.

While described with respect to the example embodiment of FIG. **19**, various alternative clock distribution topologies are possible. For example, one or more of the clock signals have a different frequency in various other embodiments. In some embodiments, one or more of the clocks shown as differential signals are single ended signals. In one embodiment, the volatile memory subsystem **1030** operates on the volatile memory clock signal **1420** and there is no backup clock signal **1408**. In some embodiments, the volatile memory subsystem **1030** is operated at a reduced frequency during a backup operation and not during a restore operation. In other embodiments, the volatile memory subsystem **1030** is operated at a reduced frequency during a restore operation and not during a backup operation.

FIG. **20** is a flowchart of an example method **1500** of controlling a memory system **1010** operatively coupled to a host system. Although described with respect to the memory system **1010** described herein, the method **1500** is compatible with other memory systems. The memory system **1010** may include a clock distribution topology **1400** similar to the one described above with respect to FIG. **19** or another clock distribution topology. The memory system **1010** can include a volatile memory subsystem **1030** and a non-volatile memory subsystem **1040**.

In an operational block **1510**, the method **1500** comprises operating the volatile memory subsystem **1030** at a first frequency when the memory system **1010** is in a first mode of operation in which data is communicated between the volatile memory subsystem **1030** and the host system. In an operational block **1520**, the method **1500** comprises operating the non-volatile memory subsystem **1040** at a second frequency when the memory system **1010** is in a second mode of operation in which data is communicated between the volatile memory subsystem **1030** and the non-volatile memory subsystem **1040**. The method **1500** further comprises operating the volatile memory subsystem **1030** at a

third frequency in an operational block **1530** when the memory system **1010** is in the second mode of operation. In certain embodiments, the memory system **1010** is not powered by a battery when it is in the second mode of operation. The memory system **1010** may switch from the first mode of operation to the second mode of operation in response to a trigger condition. The trigger condition may be any trigger condition described herein such as, for example, a power failure condition. In certain embodiments, the second mode of operation includes both backup and restore operations as described herein. In other embodiments, the second mode of operation includes backup operations but not restore operations. In yet other embodiments, the second mode of operation includes restore operations but not backup operations.

The third frequency can be less than the first frequency. For example, the third frequency can be approximately equal to the second frequency. In certain embodiments, the reduced frequency operation is an optional mode. In yet other embodiments, the first, second and/or third frequencies are configurable by a user or by the memory system **1010**.

FIG. **21** schematically illustrates an example topology of a connection to transfer data slices from two DRAM segments **1630**, **1640** of a volatile memory subsystem **1030** of a memory system **1010** to a controller **1062** of the memory system **1010**. While the example of FIG. **21** shows a topology including two DRAM segments **1630**, **1640** for the purposes of illustration, each address location of the volatile memory subsystem **1030** comprises more than the two segments in certain embodiments. The data lines **1632**, **1642** from the first DRAM segment **1630** and the second DRAM segment **1640** of the volatile memory subsystem **1030** are coupled to switches **1650**, **1652** which are coupled to the controller **1062** (e.g., logic element **1070**) of the memory system **1010**. The chip select lines **1634**, **1644** and the self-refresh lines **1636**, **1646** (e.g., CKe signals) of the first and second DRAM segments **1630**, **1640**, respectively, are coupled to the controller **1062**. In certain embodiments, the controller **1062** comprises a buffer (not shown) which is configured to store data from the volatile memory subsystem **1030**. In certain embodiments, the buffer is a first-in, first out buffer (FIFO). In certain embodiments, data slices from each DRAM segment **1630**, **1640** comprise a portion of the volatile memory subsystem data bus. In one embodiment, for example, the volatile memory subsystem **1030** comprises a 72-bit data bus (e.g., each data word at each addressable location is 72 bits wide and includes, for example, 64 bits of accessible SDRAM and 8 bits of ECC), the first data slice from the first DRAM segment **1630** may comprise 40 bits of the data word, and the second data slice from the second DRAM segment **1640** may comprise the remaining 32 bits of the data word. Certain other embodiments comprise data buses and/or data slices of different sizes.

In certain embodiments, the switches **1650**, **1652** can each be selectively switched to selectively operatively couple the data lines **1632**, **1642**, respectively from the first and second DRAM segments **1630**, **1640** to the controller **1062**. The chip select lines **1634**, **1644** enable the first and second DRAM segments **1630**, **1640**, respectively, of the volatile memory subsystem **1030**, and the self-refresh lines **1636**, **1646** toggle the first and second DRAM segments **1630**, **1640**, respectively, from self-refresh mode to active mode. In certain embodiments, the first and second DRAM segments **1630**, **1640** maintain stored information but are not accessible when they are in self-refresh mode, and maintain stored information and are accessible when they are in active mode.

In certain embodiments, when the memory system **1010** is backing up the volatile memory system **1030**, data slices from only one of the two DRAM segments **1630**, **1640** at a time are sent to the controller **1062**. For example, when the first slice is being written to the controller **1062** during a back-up, the controller **1062** sends a signal via the CKe line **1636** to the first DRAM segment **1630** to put the first DRAM segment **1630** in active mode. In certain embodiments, the data slice from the first DRAM segment **1630** for multiple words (e.g., a block of words) is written to the controller **1062** before writing the second data slice from the second DRAM segment **1640** to the controller **1062**. While the first data slice is being written to the controller **1062**, the controller **1062** also sends a signal via the CKe line **1646** to put the second DRAM segment **1640** in self-refresh mode. Once the first data slice for one word or for a block of words is written to the controller **1062**, the controller **1062** puts the first DRAM segment **1630** into self-refresh mode by sending a signal via the CKe line **1636** to the first DRAM segment **1640**. The controller **1062** also puts the second DRAM segment **1640** into active mode by sending a signal via the CKe line **1646** to the DRAM segment **1640**. The second slice for a word or for a block of words is written to the controller **1062**. In certain embodiments, when the first and second data slices are written to the buffer in the controller **1062**, the controller **1062** combines the first and second data slices **1630**, **1640** into complete words or blocks of words and then writes each complete word or block of words to the non-volatile memory subsystem **1040**. In certain embodiments, this process is called "slicing" the volatile memory subsystem **1030**.

In certain embodiments, the data may be sliced in a restore operation as well as, or instead of, during a backup operation. For example, in one embodiment, the nonvolatile memory elements **1042** write each backed-up data word to the controller **1062** which writes a first slice of the data word to the volatile memory subsystem **1030** and then a second slice of the data word to the volatile memory subsystem **1030**. In certain embodiments, slicing the volatile memory subsystem **1030** during a restore operation may be performed in a manner generally inverse to slicing the volatile memory subsystem **1030** during a backup operation.

FIG. **22** is a flowchart of an example method **1600** of controlling a memory system **1010** operatively coupled to a host system and which includes a volatile memory subsystem **1030** and a non-volatile memory subsystem **1040**. Although described with respect to the memory system **1010** described herein with respect to FIGS. **12-14** and **21**, the method **1600** is compatible with other memory systems. The method **1600** comprises communicating data words between the volatile memory subsystem **1030** and the host system when the memory system **1010** is in a first mode of operation in an operational block **1610**. For example, the memory system **1010** may be in the first mode of operation when no trigger condition has occurred and the memory system is not performing a backup and/or restore operation or is not being powered by a secondary power supply.

In an operational block **1620**, the method further comprises transferring data words from the volatile memory subsystem **1030** to the non-volatile memory subsystem **1040** when the memory system **1010** is in a second mode of operation. In certain embodiments, each data word comprises the data stored in a particular address of the memory system **1010**. The memory system **1010** may enter the second mode of operation, for example, when a trigger condition (e.g., a power failure) occurs. In certain embodiments, transferring each data word comprises storing a first

portion (also referred to as a slice) of the data word in a buffer in an operational block **1622**, storing a second portion of the data word in the buffer in an operational block **1624**, and writing the entire data word from the buffer to the non-volatile memory subsystem **1040** in an operational block **1626**.

In one example embodiment, the data word may be a 72 bit data word (e.g., 64 bits of accessible SDRAM and 8 bits of ECC), the first portion (or "slice") may comprise 40 bits of the data word, and the second portion (or "slice") may comprise the remaining 32 bits of the data word. In certain embodiments, the buffer is included in the controller **1062**. For example, in one embodiment, the buffer is a first-in, first-out buffer implemented in the controller **1062** which comprises an FPGA. The method **1600** may generally be referred to as "slicing" the volatile memory during a backup operation. In the example embodiment, the process of "slicing" the volatile memory during a backup includes bringing the 32-bit slice out of self-refresh, reading a 32-bit block from the slice into the buffer, and putting the 32-bit slice back into self-refresh. The 40-bit slice is then brought out of self-refresh and a 40-bit block from the slice is read into a buffer. Each block may comprise a portion of multiple words. For example, each 32-bit block may comprise 32-bit portions of multiple 72-bit words. In other embodiments, each block comprises a portion of a single word. The 40-bit slice is then put back into self-refresh in the example embodiment. The 32-bit and 40-bit slices are then combined into a 72-bit block by the controller **1062** and ECC detection/correction is performed on each 72-bit word as it is read from the buffer and written into the non-volatile memory subsystem (e.g., flash).

In some embodiments, the entire data word may comprise more than two portions. For example, the entire data word may comprise three portions instead of two and transferring each data word further comprises storing a third portion of each data word in the buffer. In certain other embodiments, the data word may comprise more than three portions.

In certain embodiments, the data may be sliced in a restore operation as well as, or instead of, during a backup operation. For example, in one embodiment, the nonvolatile memory elements **1040** write each backed-up data word to the controller **1062** which writes a first portion of the data word to the volatile memory subsystem **1030** and then a second portion of the data word to the volatile memory **1030**. In certain embodiments, slicing the volatile memory subsystem **1030** during a restore operation may be performed in a manner generally inverse to slicing the volatile memory subsystem **1030** during a backup operation.

The method **1600** can advantageously provide significant power savings and can lead to other advantages. For example, in one embodiment where the volatile memory subsystem **1030** comprises DRAM elements, only the slice of the DRAM which is currently being accessed (e.g., written to the buffer) during a backup is configured in full-operational mode. The slice or slices that are not being accessed may be put in self-refresh mode. Because DRAM in self-refresh mode uses significantly less power than DRAM in full-operational mode, the method **1600** can allow significant power savings. In certain embodiments, each slice of the DRAM includes a separate self-refresh enable (e.g., CKe) signal which allows each slice to be accessed independently.

In addition, the connection between the DRAM elements and the controller **1062** may be as large as the largest slice instead of as large as the data bus. In the example embodiment, the connection between the controller **1062** and the DRAM may be 40 bits instead of 72 bits. As a result, pins on the controller **1062** may be used for other purposes or a smaller controller may be used due to the relatively low number of pin-outs used to connect to the volatile memory subsystem **1030**. In certain other embodiments, the full width of the data bus is connected between the volatile memory subsystem **1030** and the controller **1062** but only a portion of it is used during slicing operations. For example, in some embodiments, memory slicing is an optional mode.

While embodiments and applications have been shown and described, it would be apparent to those skilled in the art having the benefit of this disclosure that many more modifications than mentioned above are possible without departing from the inventive concepts disclosed herein. The invention, therefore, is not to be restricted except in the spirit of the appended claims.

What is claimed is:

1. A memory module comprising:

a printed circuit board (PCB) having an interface configured to fit into a corresponding slot connector of a host system, the interface including a plurality of edge connections configured to couple power, data, address and control signals between the memory module and the host system;

a first buck converter configured to provide a first regulated voltage having a first voltage amplitude;

a second buck converter configured to provide a second regulated voltage having a second voltage amplitude;

a third buck converter configured to provide a third regulated voltage having a third voltage amplitude;

a converter circuit configured to provide a fourth regulated voltage having a fourth voltage amplitude; and

a plurality of components coupled to the PCB, each component of the plurality of components coupled to one or more regulated voltages of the first, second, third and fourth regulated voltages, the plurality of components comprising:

a plurality of synchronous dynamic random access memory (SDRAM) devices coupled to the first regulated voltage, and

at least one circuit coupled between a first portion of the plurality of edge connections and the plurality of SDRAM devices, the at least one circuit operable to (i) receive a first plurality of address and control signals via the first portion of the plurality of edge connections, and (ii) output a second plurality of address and control signals to the plurality of SDRAM devices, the at least one circuit coupled to both the second regulated voltage and the fourth regulated voltage, wherein a first one of the second and fourth voltage amplitudes is less than a second one of the second and fourth voltage amplitudes.

2. The memory module of claim **1**, wherein the first and third buck converters are further configured to operate as a dual buck converter.

3. The memory module of claim **1**, wherein the first voltage amplitude is 1.8 volts.

4. The memory module of claim **1**, wherein the second, third, and fourth voltage amplitudes are 2.5 volts, 1.2 volts, and 3.3 volts, respectively.

5. The memory module of claim **1**, further comprising:

a voltage monitor circuit configured to monitor a power input voltage received via a second portion of the plurality of edge connections, the voltage monitor circuit configured to produce a trigger signal in response to the power input voltage having a voltage amplitude that is greater than a first threshold voltage.

6. The memory module of claim 5, wherein the voltage monitor circuit is further configured to produce the trigger signal in response to the power input voltage having a voltage amplitude that is less than a second threshold voltage.

7. The memory module of claim 6, wherein the second threshold voltage corresponds to a voltage level that is ten percent less than a specified operating voltage.

8. The memory module of claim 1, the plurality of components further comprising:

one or more registers coupled to one of the first, second, third and fourth regulated voltages, the one or more registers configured to register, in response to a clock, the first plurality of address and control signals, wherein the one of the first, second, third and fourth regulated voltages is selectively switched off to turn power off to the one or more registers while one or more components of the plurality of components are powered on.

9. The memory module of claim 5, wherein the first threshold voltage corresponds to a voltage level that is ten percent greater than a specified operating voltage.

10. The memory module of claim 5, the plurality of components further comprising:

a logic element including a non-volatile memory, the non-volatile memory is configured to store configuration information.

11. The memory module of claim 10, wherein, in response to the trigger signal, the logic element writes information into the non-volatile memory.

12. The memory module of claim 5, the plurality of components further comprising:

a non-volatile memory; and

a controller configured to receive the trigger signal, wherein, in response to the trigger signal, the controller performs a write operation to the non-volatile memory.

13. The memory module of claim 5, wherein the power input voltage is coupled to the first, second, and third buck converters and the converter circuit.

14. The memory module of claim 8, wherein, in response to selectively switching on the one of the first, second, third and fourth regulated voltages to the one or more registers, the one or more registers is configured to output the registered first plurality of address and control signals to the plurality of SDRAM devices.

15. The memory module of claim 1, the plurality of components further comprising:

a logic element including one or more integrated circuits and discrete electrical elements, the one or more integrated circuit including an internal non-volatile memory, wherein the non-volatile memory is configured to store configuration information.

16. A memory module comprising:

a printed circuit board (PCB) having an interface configured to fit into a corresponding slot connector of a host system, the interface including a plurality of edge connections configured to couple power, data, address and control signals between the memory module and the host system;

first, second, and third buck converters configured to receive a pre-regulated input voltage and to produce first, second and third regulated voltages, respectively;

a converter circuit configured to reduce the pre-regulated input voltage to provide a fourth regulated voltage, wherein the first, second, third and fourth regulated voltages have first, second, third, and fourth voltage amplitudes, respectively;

a plurality of components coupled to the PCB, the plurality of components including a plurality of synchronous dynamic random access memory (SDRAM) devices, each component of the plurality of components coupled to one or more regulated voltages of the first, second, third and fourth regulated voltages; and

a voltage monitor circuit configured to monitor an input voltage received via a first portion of the plurality of edge connections, the voltage monitor circuit configured to produce a signal in response to the input voltage having a voltage amplitude that is greater than a first threshold voltage.

17. The memory module of claim 16, wherein the second and third buck converters are configured to operate as a dual buck converter.

18. The memory module of claim 16, the plurality of components further including:

a controller coupled to the voltage monitor circuit and configured to receive the signal, wherein the controller executes a write operation in response to the signal.

19. The memory module of claim 18, wherein the write operation includes writing data information into non-volatile memory.

20. The memory module of claim 16, wherein the plurality of SDRAM devices are configured to receive at least one of the first, second, third and fourth regulated voltages having a voltage amplitude of 1.8 volts.

21. The memory module of claim 16, the plurality of components further including:

at least one circuit coupled between the interface and the plurality of SDRAM devices, the at least one circuit operable to receive a first plurality of address and control signals via a second portion of the plurality of edge connections and to output a second plurality of address and control signals to the plurality of SDRAM devices, the at least one circuit coupled to both the second regulated voltage and the fourth regulated voltage, wherein a first one of the second and fourth voltage amplitudes is less than a second one of the second and fourth voltage amplitudes.

22. The memory module of claim 16, the plurality of components further including:

a logic element including an internal non-volatile memory, wherein the non-volatile memory is configured to store configuration information, wherein the configuration information is used to program the logic element.

23. A memory module comprising:

a printed circuit board (PCB) having an interface configured to fit into a corresponding slot connector of a host system, the interface including a plurality of edge connections configured to couple power, data, address and control signals between the memory module and the host system;

a plurality of components coupled to the PCB, each component of the plurality of components coupled to one or more regulated voltages of first, second, third and fourth regulated voltages, the plurality of components including a plurality of synchronous dynamic random access memory (SDRAM) devices and one or more registers, the plurality of SDRAM devices coupled to the first regulated voltage, the one or more registers coupled to (i) the second regulated voltage, (ii) a portion of the plurality of edge connections, and (iii) the plurality of SDRAM devices, wherein a plu-

rality of address and control signals are coupled to the one or more registers via the portion of the plurality of edge connections;

first, second, and third buck converters configured to provide the first, second and third regulated voltages, respectively; and

a converter circuit configured to provide the fourth regulated voltage,

wherein the second regulated voltage is configured to be selectively switched on or off to the one or more registers while at least the plurality of SDRAM devices are powered on,

wherein if the second regulated voltage is switched on while at least the plurality of SDRAM devices are powered on, the one or more registers are configured to couple the first plurality of address and control signals to the plurality of SDRAM devices, and

wherein if the second regulated voltage is switched off while the plurality of SDRAM devices are powered on, the one or more registers are configured to decouple the plurality of SDRAM devices from the first plurality of address and control signals.

24. The memory module of claim **23**, further comprising:

a voltage monitor circuit configured to monitor an input voltage received from the host system via the interface, the voltage monitor circuit configured to produce a signal in response to the input voltage having a voltage amplitude that is greater than a first threshold voltage.

25. The memory module of claim **24**, the plurality of components further including:

a controller coupled to the voltage monitor circuit and configured to receive the signal, wherein, in response to the signal, the controller executes a write operation.

26. The memory module of claim **25**, wherein the write operation includes writing data information to non-volatile memory.

27. The memory module of claim **24**, wherein the voltage monitor circuit is further configured to produce the signal in response to the input voltage having a voltage amplitude that is less than a second threshold voltage.

28. The memory module of claim **23**, wherein the second and third buck converters are configured to operate as a dual buck converter.

29. The memory module of claim **23**, wherein the plurality of SDRAM devices are configured to receive at least one of the first, second, third and fourth regulated voltages having a voltage amplitude of 1.8 volts.

30. The memory module of claim **23**, wherein the first, second, and third buck converters are configured to receive a pre-regulated input voltage and to provide the first, second and third regulated voltages, respectively, and wherein the converter circuit is configured to reduce the pre-regulated voltage input to provide the fourth regulated voltage.

* * * * *