US010672458B1

(12) **United States Patent**
Shaeffer et al.

(10) **Patent No.: US 10,672,458 B1**
(45) **Date of Patent: *Jun. 2, 2020**

(54) **MEMORY SYSTEM TOPOLOGIES INCLUDING A BUFFER DEVICE AND AN INTEGRATED CIRCUIT MEMORY DEVICE**

(71) Applicant: **Rambus Inc.**, Sunnyvale, CA (US)

(72) Inventors: **Ian Shaeffer**, Los Gatos, CA (US); **Ely Tsern**, Los Altos, CA (US); **Craig Hampel**, Los Altos, CA (US)

(73) Assignee: **Rambus Inc.**, Sunnyvale, CA (US)

(*) Notice: Subject to any disclaimer, the term of this patent is extended or adjusted under 35 U.S.C. 154(b) by 0 days.

This patent is subject to a terminal disclaimer.

(21) Appl. No.: **16/692,043**

(22) Filed: **Nov. 22, 2019**

Related U.S. Application Data

(60) Continuation of application No. 16/214,986, filed on Dec. 10, 2018, now Pat. No. 10,535,398, which is a

(Continued)

(51) **Int. Cl.**
G11C 7/00 (2006.01)
G11C 11/4093 (2006.01)

(Continued)

(52) **U.S. Cl.**
CPC ***G11C 11/4093*** (2013.01); ***G06F 13/16*** (2013.01); ***G06F 13/4027*** (2013.01);

(Continued)

(58) **Field of Classification Search**
CPC . G11C 11/4093; G06F 13/16; G06F 13/4027; G06F 13/4068

(Continued)

(56) **References Cited**

U.S. PATENT DOCUMENTS

4,621,339 A 11/1986 Wagner et al.
4,631,666 A 12/1986 Harris et al.

(Continued)

FOREIGN PATENT DOCUMENTS

CN 1540665 10/2004
CN 1577633 2/2005

(Continued)

OTHER PUBLICATIONS

"Draft Standard for a High-Speed Memory Interface (SyncLink)," Draft 0.99 IEEE P1596.7-199X, pp. 1-56 (1996), Microprocessor and Microcomputer Standards Subcommittee of the IEEE Computer Society. 66 pages.

(Continued)

Primary Examiner — Vu A Le

(57) **ABSTRACT**

Systems, among other embodiments, include topologies (data and/or control/address information) between an integrated circuit buffer device (that may be coupled to a master, such as a memory controller) and a plurality of integrated circuit memory devices. For example, data may be provided between the plurality of integrated circuit memory devices and the integrated circuit buffer device using separate segmented (or point-to-point link) signal paths in response to control/address information provided from the integrated circuit buffer device to the plurality of integrated circuit buffer devices using a single fly-by (or bus) signal path. An integrated circuit buffer device enables configurable effective memory organization of the plurality of integrated circuit memory devices. The memory organization represented by the integrated circuit buffer device to a memory controller may be different than the actual memory organization behind or coupled to the integrated circuit buffer device. The buffer device segments and merges the data transferred between the memory controller that expects a

(Continued)

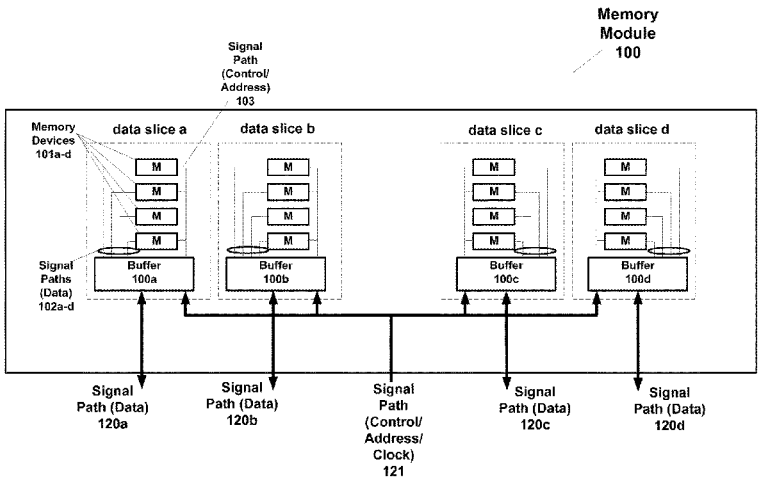

particular memory organization and actual memory organization.

20 Claims, 38 Drawing Sheets

Related U.S. Application Data

continuation of application No. 15/832,468, filed on Dec. 5, 2017, now Pat. No. 10,381,067, which is a continuation of application No. 15/389,409, filed on Dec. 22, 2016, now Pat. No. 9,865,329, which is a continuation of application No. 14/801,723, filed on Jul. 16, 2015, now Pat. No. 9,563,583, which is a continuation of application No. 14/015,648, filed on Aug. 30, 2013, now Pat. No. 9,117,035, which is a continuation of application No. 13/149,682, filed on May 31, 2011, now Pat. No. 8,539,152, which is a continuation of application No. 12/703,521, filed on Feb. 10, 2010, now Pat. No. 8,108,607, which is a continuation of application No. 12/424,442, filed on Apr. 15, 2009, now Pat. No. 7,685,364, which is a division of application No. 11/697,572, filed on Apr. 6, 2007, now Pat. No. 7,562,271, which is a continuation-in-part of application No. 11/460,899, filed on Jul. 28, 2006, now Pat. No. 7,729,151, which is a continuation-in-part of application No. 11/236,401, filed on Sep. 26, 2005, now Pat. No. 7,464,225.

(51) **Int. Cl.**

H01L 25/10	(2006.01)
G11C 5/02	(2006.01)
G11C 5/04	(2006.01)
G11C 5/06	(2006.01)
G11C 7/10	(2006.01)
G11C 7/22	(2006.01)
G06F 13/40	(2006.01)
G06F 13/16	(2006.01)
G11C 11/4076	(2006.01)
G11C 11/4091	(2006.01)
G11C 11/4094	(2006.01)
G11C 11/4096	(2006.01)
H01L 25/065	(2006.01)
H01L 25/18	(2006.01)
H01L 23/00	(2006.01)

(52) **U.S. Cl.**

CPC ***G06F 13/4068*** (2013.01); ***G11C 5/025*** (2013.01); ***G11C 5/04*** (2013.01); ***G11C 5/06*** (2013.01); ***G11C 7/1006*** (2013.01); ***G11C 7/222*** (2013.01); ***G11C 11/4076*** (2013.01); ***G11C 11/4091*** (2013.01); ***G11C 11/4094*** (2013.01); ***G11C 11/4096*** (2013.01); ***H01L 25/0652*** (2013.01); ***H01L 25/105*** (2013.01); *G11C 7/22* (2013.01); *H01L 24/73* (2013.01); *H01L 25/0657* (2013.01); *H01L 25/18* (2013.01); *H01L 2224/32145* (2013.01); *H01L 2224/48227* (2013.01); *H01L 2224/73265* (2013.01); *H01L 2225/1005* (2013.01); *H01L 2225/1023* (2013.01); *H01L 2225/1058* (2013.01); *H01L 2924/14* (2013.01); *H01L 2924/15192* (2013.01); *H01L 2924/15311* (2013.01); *H01L 2924/15331* (2013.01); *H01L 2924/3011* (2013.01); *H01L 2924/3025* (2013.01)

(58) **Field of Classification Search**

USPC 365/189.17

See application file for complete search history.

(56) **References Cited**

U.S. PATENT DOCUMENTS

4,644,532	A	2/1987	George et al.
4,667,305	A	5/1987	Dill et al.
4,691,301	A	9/1987	Anderson
4,747,070	A	5/1988	Trottier et al.
4,747,100	A	5/1988	Roach et al.
4,858,107	A	8/1989	Fedele
4,864,563	A	9/1989	Pavey et al.
4,947,257	A	8/1990	Fernandez et al.
4,965,799	A	10/1990	Green et al.
4,977,498	A	12/1990	Rastegar et al.
5,034,917	A	7/1991	Bland et al.
5,068,650	A	11/1991	Fernandez et al.
5,164,916	A	11/1992	Wu et al.
5,228,132	A	7/1993	Neal et al.
5,228,134	A	7/1993	MacWilliams et al.
5,243,703	A	9/1993	Farmwald et al.
5,283,877	A	2/1994	Gastinel et al.
5,301,278	A	4/1994	Bowater et al.
5,307,320	A	4/1994	Farrer et al.
5,325,493	A	6/1994	Herrell et al.
5,355,467	A	10/1994	MacWilliams et al.
5,371,880	A	12/1994	Bhattacharya
5,392,407	A	2/1995	Heil et al.
5,400,360	A	3/1995	Richards et al.
5,408,646	A	4/1995	Olnowich et al.
5,432,823	A	7/1995	Gasbarro et al.
5,475,818	A	12/1995	Molyneaux et al.
5,509,138	A	4/1996	Cash et al.
5,511,224	A	4/1996	Tran et al.
5,513,135	A	4/1996	Dell et al.
5,513,377	A	4/1996	Capowski et al.
5,537,394	A	7/1996	Abe et al.
5,544,342	A	8/1996	Dean
5,553,266	A	9/1996	Metzger et al.
5,557,266	A	9/1996	Calvignac et al.
5,574,945	A	11/1996	Elko et al.
5,602,780	A	2/1997	Diem et al.
5,604,735	A	2/1997	Levinson et al.
5,606,717	A	2/1997	Farmwald et al.
5,630,095	A	5/1997	Snyder
5,630,170	A	5/1997	Koizumi
5,638,334	A	6/1997	Farmwald et al.
5,642,444	A	6/1997	Mostafavi
5,644,541	A	7/1997	Siu et al.
5,655,113	A	8/1997	Leung et al.
5,657,481	A	8/1997	Farmwald et al.
5,659,710	A	8/1997	Sherman et al.
5,701,313	A	12/1997	Purdham
5,701,438	A	12/1997	Bains
5,742,840	A	4/1998	Hansen et al.
5,748,872	A	5/1998	Norman
5,758,056	A	5/1998	Barr
5,781,717	A	7/1998	Wu et al.
5,787,083	A	7/1998	Iwamoto et al.
5,802,054	A	9/1998	Bellenger
5,802,565	A	9/1998	McBride et al.
5,805,089	A	9/1998	Fiedler
5,805,798	A	9/1998	Kearns et al.
5,838,603	A	11/1998	Mori et al.
5,838,985	A	11/1998	Ohki
5,845,108	A	12/1998	Yoo et al.
5,848,145	A	12/1998	Gallagher et al.
5,860,080	A	1/1999	James et al.
5,867,180	A	2/1999	Katayama et al.
5,867,422	A	2/1999	John
5,883,839	A	3/1999	Tosaka et al.
5,884,036	A	3/1999	Haley
5,889,726	A	3/1999	Jeddeloh
5,893,921	A	4/1999	Bucher et al.
5,896,383	A	4/1999	Wakeland

(56) **References Cited**

U.S. PATENT DOCUMENTS

5,898,863	A	4/1999	Ofer et al.
5,900,017	A	5/1999	Genduso et al.
5,901,294	A	5/1999	Tran et al.
5,910,921	A	6/1999	Beffa et al.
5,911,052	A	6/1999	Singhal et al.
5,913,044	A	6/1999	Tran et al.
5,917,760	A	6/1999	Millar
5,923,893	A	7/1999	Moyer et al.
5,926,839	A	7/1999	Katayama
5,953,215	A	9/1999	Karabatsos
5,977,806	A	11/1999	Kikuchi
5,982,238	A	11/1999	Soderquist
5,987,576	A	11/1999	Johnson et al.
6,006,318	A	12/1999	Hansen et al.
6,016,282	A	1/2000	Keeth
6,034,878	A	3/2000	Osaka et al.
6,038,682	A	3/2000	Norman
6,065,092	A	5/2000	Roy
6,092,229	A	7/2000	Boyle et al.
6,097,883	A	8/2000	Dell et al.
6,104,417	A	8/2000	Nielsen et al.
6,108,731	A	8/2000	Suzuki et al.
6,125,419	A	9/2000	Umemura et al.
6,128,756	A	10/2000	Beffa
6,142,830	A	11/2000	Loeffler
6,151,648	A	11/2000	Haq
6,154,821	A	11/2000	Barth et al.
6,154,826	A	11/2000	Wulf et al.
6,154,855	A	11/2000	Norman
6,160,423	A	12/2000	Haq
6,182,257	B1	1/2001	Gillingham
6,185,644	B1	2/2001	Farmwald et al.
6,185,654	B1	2/2001	Van Doren
6,208,273	B1	3/2001	Dye et al.
6,226,723	B1	5/2001	Gustayson et al.
6,247,100	B1	6/2001	Drehmel et al.
6,255,859	B1	7/2001	Haq
6,263,413	B1	7/2001	Motomura et al.
6,263,448	B1	7/2001	Tsern et al.
6,266,252	B1	7/2001	Karabatsos
6,272,034	B1	8/2001	Kinoshita et al.
6,272,609	B1	8/2001	Jeddeloh
6,276,844	B1	8/2001	Coteus et al.
6,292,877	B1	9/2001	Ryan
6,317,252	B1	11/2001	Vahala et al.
6,317,352	B1	11/2001	Halbert et al.
6,321,282	B1	11/2001	Horowitz et al.
6,327,205	B1	12/2001	Haq
6,330,667	B1	12/2001	Klein
6,330,687	B1	12/2001	Griffith
6,345,321	B1	2/2002	Litaize et al.
6,349,051	B1	2/2002	Klein
6,369,605	B1	4/2002	Bonella et al.
6,401,167	B1	6/2002	Barth et al.
6,408,402	B1	6/2002	Norman
6,414,868	B1	7/2002	Wong et al.
6,414,899	B2	7/2002	Afghahi et al.
6,414,904	B2	7/2002	So
6,425,064	B2	7/2002	Soderquist
6,434,035	B2	8/2002	Miersch et al.
6,442,057	B1	8/2002	Song et al.
6,442,644	B1	8/2002	Gustavson et al.
6,442,742	B1	8/2002	Sugibayashi
6,446,158	B1	9/2002	Karabatsos
6,449,213	B1	9/2002	Dodd et al.
6,449,679	B2	9/2002	Ryan
6,449,703	B2	9/2002	Jeddeloh
6,449,727	B1	9/2002	Toda
6,466,496	B2	10/2002	Kuge
6,477,592	B1	11/2002	Chen et al.
6,477,614	B1	11/2002	Leddige et al.
6,480,409	B2	11/2002	Park et al.
6,480,927	B1	11/2002	Bauman
6,487,102	B1	11/2002	Halbert et al.
6,493,250	B2	12/2002	Halbert et al.
6,502,161	B1	12/2002	Perego et al.
6,510,503	B2	1/2003	Gillingham et al.
6,510,506	B2	1/2003	Nagapudi et al.
6,513,080	B1	1/2003	Haq
6,513,091	B1	1/2003	Blackmon et al.
6,516,365	B2	2/2003	Horowitz et al.
6,526,469	B1	2/2003	Drehmel et al.
6,530,006	B1	3/2003	Dodd et al.
6,530,033	B1	3/2003	Raynham et al.
6,553,450	B1	4/2003	Dodd et al.
6,557,069	B1	4/2003	Drehmel et al.
6,587,912	B2	7/2003	Leddige et al.
6,604,180	B2	8/2003	Jeddeloh
6,622,224	B1	9/2003	Cloud
6,625,687	B1	9/2003	Halbert et al.
6,633,947	B1	10/2003	Holman et al.
6,639,820	B1	10/2003	Khandekar et al.
6,643,752	B1	11/2003	Donnelly et al.
6,684,263	B2	1/2004	Horowitz et al.
6,690,191	B2	2/2004	Wu et al.
6,690,726	B1	2/2004	Yavits et al.
6,701,446	B2	3/2004	Tsern et al.
6,708,248	B1	3/2004	Garrett, Jr. et al.
6,714,433	B2	3/2004	Doblar et al.
6,720,643	B1	4/2004	Fox et al.
6,742,098	B1	5/2004	Halbert et al.
6,754,117	B2	6/2004	Jeddeloh
6,759,884	B2	7/2004	Tomita
6,820,163	B1	11/2004	McCall et al.
6,842,864	B1	1/2005	Barth et al.
6,853,938	B2	2/2005	Jeddeloh
6,854,042	B1	2/2005	Karabatsos
6,864,524	B2	3/2005	Masleid et al.
6,877,079	B2	4/2005	Yoo et al.
6,889,284	B1	5/2005	Nizar et al.
6,968,419	B1	11/2005	Holman
6,970,968	B1	11/2005	Holman
7,007,130	B1	2/2006	Holman
7,010,629	B1	3/2006	Frame et al.
7,010,642	B2	3/2006	Perego et al.
7,038,956	B2	5/2006	Beer
7,110,400	B2	9/2006	Hronik
7,123,497	B2	10/2006	Matsui et al.
7,127,022	B1	10/2006	Dieguez
7,254,075	B2	8/2007	Woo et al.
7,275,189	B2	9/2007	Ruckerbauer et al.
7,320,047	B2	1/2008	Perego et al.
7,321,997	B2	1/2008	Zimmerman et al.
7,339,840	B2	3/2008	Wallner et al.
7,404,050	B2	7/2008	Gregorius
7,519,894	B2	4/2009	WeiB et al.
7,523,244	B2	4/2009	Liaw et al.
7,615,857	B1	11/2009	Jouppi
7,949,931	B2	5/2011	Lastras-Montano
8,060,774	B2	11/2011	Smith et al.
2001/0000693	A1	5/2001	Hamamoto et al.
2001/0039606	A1	11/2001	Jeddeloh
2001/0048616	A1	12/2001	Ayukawa et al.
2002/0024833	A1	2/2002	Song et al.
2002/0024834	A1	2/2002	Jeon et al.
2002/0083287	A1	6/2002	Zumkehr et al.
2002/0112119	A1	8/2002	Halbert et al.
2002/0124153	A1	9/2002	Litaize et al.
2002/0124203	A1	9/2002	Fang
2002/0129215	A1	9/2002	Yoo et al.
2002/0135394	A1	9/2002	Ahn et al.
2002/0144071	A1	10/2002	Williams et al.
2002/0184462	A1	12/2002	Jeddeloh
2003/0012229	A1	1/2003	Braun
2003/0018880	A1	1/2003	Litaize et al.
2003/0043613	A1	3/2003	Doblar et al.
2003/0074490	A1	4/2003	Pochmuller
2003/0090879	A1	5/2003	Doblar et al.
2003/0120895	A1	6/2003	Litaize et al.
2003/0177313	A1	9/2003	Iyer et al.
2003/0204783	A1	10/2003	Kuroda
2004/0015650	A1	1/2004	Zumkehr et al.
2004/0034825	A1	2/2004	Jeddeloh
2004/0049720	A1	3/2004	Boehler

(56) **References Cited**

U.S. PATENT DOCUMENTS

2004/0085795	A1	5/2004	Braun et al.
2004/0095838	A1	5/2004	Li
2004/0105292	A1	6/2004	Matsui
2004/0125666	A1	7/2004	Lee et al.
2004/0133736	A1	7/2004	Kyung
2004/0143773	A1	7/2004	Chen
2004/0145935	A1	7/2004	Jakobs
2004/0151038	A1	8/2004	Ruckerbauer et al.
2004/0164334	A1	8/2004	Masleid et al.
2004/0221106	A1	11/2004	Perego et al.
2004/0150024	A1	12/2004	Mazoyer et al.
2004/0246767	A1	12/2004	Vogt
2004/0246785	A1	12/2004	Vogt
2004/0246786	A1	12/2004	Vogt
2004/0250024	A1	12/2004	Vogt
2004/0250153	A1	12/2004	Vogt
2004/0250181	A1	12/2004	Vogt et al.
2004/0256638	A1	12/2004	Perego et al.
2004/0257847	A1	12/2004	Matsui et al.
2004/0260991	A1	12/2004	Vogt et al.
2004/0267481	A1	12/2004	Resnick et al.
2005/0108469	A1	5/2005	Freeman et al.
2005/0236703	A1	10/2005	Kazi et al.
2006/0095592	A1	5/2006	Borkenhagen
2007/0070669	A1	3/2007	Tsern
2008/0082763	A1	4/2008	Rajan et al.
2008/0294838	A1*	11/2008	Houston G06F 9/4403 711/103
2009/0198924	A1	8/2009	Tsern et al.
2009/0321893	A1	12/2009	Somasekhar et al.
2010/0074038	A1	3/2010	Ruckerbauer et al.
2010/0217915	A1	8/2010	O'Connor et al.

FOREIGN PATENT DOCUMENTS

DE	10208726		4/2010
EP	0198429		10/1986
EP	0282070	A2	9/1988
EP	0811916	A2	12/1997
EP	0813204	A2	12/1997
EP	0947070		10/1999
EP	1069509	A2	1/2001
GB	2383656		7/2003
JP	04-186599		7/1992
JP	10-207785		8/1998
JP	10-207786		8/1998
JP	11-297092		10/1999
JP	11-317503		11/1999
JP	2000-030487		1/2000
JP	2000-040035		2/2000
JP	2002-064145		2/2002
JP	2003-324155		11/2003
JP	2004-055100		2/2004
JP	2004-139552	A2	5/2004
JP	2004-327474		11/2004
JP	2006-302129		11/2006
WO	WO-1998-012637		3/1998
WO	WO-1999-030240	A1	6/1999
WO	WO-99/41666	A1	8/1999
WO	WO-1999-041667	A1	8/1999
WO	WO-2002-025454	A2	3/2002
WO	WO-2004/025663		3/2004
WO	WO-2004-111856		12/2004
WO	WO-2005/066965		7/2005
WO	WO-2007-028109	A2	3/2007
WO	WO-2007-038225		4/2007

OTHER PUBLICATIONS

"Intel 82804AA Memory Repeater Hub for SDRAM (MRH-S)", Datasheet, Intel Corp., pp. 1-48 (Nov. 1999).

"Intel 82805AA Memory Translator Hub (MTH) Datasheet", Intel Corp., pp. 1-48 (Nov. 1999). 48 pages.

"Inter Partes Reexamination Communication," issued in Inter Partes Reexam Control No. 95/000,166, mail date (from USPTO) Oct. 19, 2007, 23 pages.

"Order Granting/Denying Request for Inter Partes Reexamination," issued in Inter Partes Reexam Control No. 95/000,183, mail date (from USPTO) Oct. 19, 2007, 21 pages.

"SLDRAM 400 Mb/s/pin Command/Address Repeater", SLD10400 Rev. 5, SLDRAM Consortium, pp. 1-12, (Jan. 7, 1998).

Intel Developer Forum, "DDR2 Memory in 2004 Servers—Recipes for Successful Designs", Sep. 2003. 33 pages.

Allan, Graham, "DDR SDRAM/SGRAM: An Interpretation of the JEDEC Standard," MOSAID Technologies Inc., Sep. 25, 1998. 73 pages.

AMD letter entitled "Re: Patent and Patent Applications Declaration Concerning Fully Buffered DIMMs," dated Apr. 12, 2004, referenced in Excel Spreadsheet, entitled "Patents.xls." 1 page.

Cataldo, A., "TI Fields DSP-Based Media Processor on a DIMM", EE Times (Jan. 2000). 2 pages.

Chakraborty, Kanad, "BISRAMGEN: A Silicon Compiler for Built-In Self-Repairable Random-Access Memories," University of Michigan, The Sciences and Engineering, vol. 58-02B, 1997. 145 pages.

Chinese Office Action dated Nov. 6, 2009, The Patent Office of the People's Republic of China, Chinese Patent Application No. 200680041998.3 filed Sep. 21, 2006, 10 pages.

CN First Office Action dated Mar. 19, 2012 re CN Application No. 200880016745.X. 25 pages.

CN First Office Action dated Nov. 6, 2009 re CN Application No. 200680041998.3. 10 pages.

CN Office Action dated Apr. 2, 2011 re CN Application No. 201010184674.3. 34 pages.

CN Office Action dated Jan. 29, 2012 in CN Application No. 200680041998.3, Includes English Translation. 30 pages.

CN Office Action dated Oct. 26, 2011 in CN Application No. 200680041998.3. 3 pages.

CN Rejection Decision dated Jan. 29, 2012 re CN Application No. 200680041998.3. 30 pages.

CN Response dated Aug. 16, 2011 to the Third Office Action dated Jun. 9, 2011 re CN Application No. 200680041998.3. 4 Pages.

CN Response dated Aug. 17, 2011 to the Office Action dated Apr. 2, 2011 re CN Application No. 201010184674.3. 19 Pages.

CN Response dated Jun. 25, 2012 to the Third Office Action dated Apr. 12, 2012 in CN Application No. 201010184674.3. 19 pages.

CN Response dated May 20, 2010 re Cn Application No. 200680041993.3 no translation. 20 Pages.

CN Response submitted on Mar. 21, 2011 to the Second Office Action of Jan. 7, 2011 re CN Application No. 200680041998.3. 26 pages.

CN Response to Office Action dated May 20, 2010, Chinese Patent Application No. 200680041998.3 Filed Sep. 21, 2006. 20 Pages.

CN Second Office Action dated Jan. 7, 2011 re CN Application No. 200680041998.3. 22 pages.

CN Second Office Action dated Oct. 26, 2011 re CN Application No. 201010184674.3. 8 Pages.

CN Third Office Action dated Apr. 12, 2012 re CN Application No. 201010184674.3. 6 pages.

CN Third Office Action dated Jun. 9, 2011 re CN Application No. 200680041998.3. 27 pages.

Communication from European Patent Office dated Mar. 9, 2007 in EP Application No. 05001739.8-2210. 4 pages.

David, Howard Intel Developer Forum, "Fully Buffered Dimm (FB-DIMM) Design Considerations", Feb. 18, 2004. 37 pages.

Doettling et al., "S/390 Parallel Enterprise Server Generation 3: A Balanced System and Cache Structure," IBM J. Res. Develop., vol. 41 (No. 4/5), Jul./Sep. 1997, pp. 405-428. 24 pages.

EP Office Action dated Jul. 6, 2012 in EP Application No. 06815141.4-2210. 5 pages.

EP Office Action dated Sep. 17, 2010, EP Patent Application No. 06815141.4, filed Sep. 2006. 5 Pages.

EP Office Communication pursuant to Article 94(3) EPC, dated Sep. 17, 2010, in EP Application No. 06815141.4-2210. 5 pages.

EP Response dated Feb. 2, 2011 to the Official Communication of Sep. 17, 2010 re EP Application No. 06815141.4 20 Pages.

(56) **References Cited**

OTHER PUBLICATIONS

EP Search Report dated May 18, 2006 re EP Application No. 05001769.8. 3 Pages.
Excel Spreadsheet, entitled "Patents and Patent Applications that May be Related to FB-DIMM," available at "http://www.jedec.org/download/search/FBDIMM/patents.xls," Jan. 23, 2006. 2 pages.
Exhibit AH, Tab 1—In the matter of Rambus, Inc., FTC Docket No. 9302, Opinion of the Commission, re Request for Inter Partes Reexamination of U.S. Pat. No. 6,426,916, Aug. 2, 2006 (date shown on page from FTC website for Docket No. 9302). 121 pages.
Expert Report of Robert J. Murphy Regarding Patent Validity, dated Apr. 13, 2005, from *Hynix Semiconductor Inc. et al.* v. *Rambus Inc.*, No. 00-20905 RMW (N.D. Cal.) 112 pages.
Extended European Search Report, dated Apr. 13, 2006, from European Application No. 05 02 6720. 7 pages.
Extended European Search Report, dated Aug. 24, 2007, from European Application No. 06 12 5946. 4 pages.
Extended European Search Report, dated Aug. 6, 2007, from European Application No. 06 12 5958.6. 4 pages.
Extended European Search Report, dated Jul. 18, 2007, from European Application No. 06 12 5954.5. 4 pages.
Farmwald, M. et al., (Rambus Inc.) "A fast path to one memory," IEEE Spectrum, Oct. 1992, pp. 50-51. 2 pages.
Gibson, Jerry D., Editor-in-Chief, "The Mobile Communications Handbook," copyright 1996 CRC Press, Inc., p. 24. 3 pages.
Gillingham et al., "SLDRAM: High Performance Open-Standard Memory," IEEE Micro, Nov./Dec. 1997, pp. 29-39, vol. 17, No. 6, Institute of Electrical and Electronics Engineers, Inc., Los Alamitos, California. 11 pages.
Gillingham, Peter, "SLDRAM Architectural and Functional Overview," SLDRAM Consortium, Aug. 29, 1997, pp. 1-14. 14 pages.
Gjessing, S. et al., "A RAM link for high speed", IEEE Spectrum, Oct. 1992, pp. 52-53.
Graham Allan, MOSAID Technologies Inc., "DDR SDRAM/SGRAM an Interpretation of the JEDEC Standard", Sep. 25, 1998 72 pages.
Gustavson et al., "The Scalable Coherent Interface Project (Superbus)," SCI Aug. 22, 1988, Draft, Rev. 14. 16 pages.
Gustavson, David B., "Scalable Coherent Interface", Nov. 28, 1988, Invited paper presented at COMPCON Spring 89, San Francisco, CA, IEEE pp. 536-538, Feb. 24-Mar. 3, 1989. 3 pages.
Gustavson, David B., P1596: SCI, A Scalable Coherent Interface Bus Specification Components (Nov. 28, 1988). 3 pages.
Gustavson, David et al., "Macintosh HD: Desktop Folder: SLDRAMrepeaterConcerns", Sunday, Nov. 23, 1997, 4 pages.
Herriot, J., "Software is the Key to Wafer-Scale RAM," High Performance Systems, vol. 11, No. 1, Jan. 1990, pp. 36-37.
Hynix's Motion for Leave to File Motion for Partial Reconsideration of Claim Construction and Summary Judgment Orders, dated Aug. 5, 2005, from *Hynix Semiconductor Inc. et al.* v. *Rambus Inc.*, No. 00-20905 RMW (N.D. Cal.) 6 pages.
Hynix's Motion for Reconsideration of Construction of "Device" and Related Summary Judgment Orders, dated Oct. 18, 2005, from *Hynix Semiconductor Inc. et al.* v. *Rambus Inc.*, No. 00-20905 RMW (N.D. Cal.) 31 pages.
Hynix's Opposition to Rambus's Motion for Summary Judgment of Infringement by Hynix's Counterclaim Products, dated Nov. 2, 2007, from *Rambus Inc.* v. *Hynix Semiconductor Inc. et al.*, No. 05-00334 RMW (N.D. Cal.) 16 pages.
Hynix's Reply in Support of its Motion for Reconsideration of Construction of "Device" and Related Summary Judgment Orders, dated Nov. 7, 2005, from *Hynix Semiconductor Inc. et al.* v. *Rambus Inc.*, No. 00-20905 RMW (N.D. Cal.) 11 pages.
Hynix's Reply Re: Motion for a New Trial on Invalidity Based on Prior Art, dated Jun. 27, 2006, Case No. CV 00-20905 RMW. 8 pages.
Hynix's Supplemental Brief in Support of its Motion for New Trial in Invalidity (KSR), dated Jul. 6, 2007, from *Hynix Semiconductor Inc. et al.* v. *Rambus Inc.*, No. 00-20905 RMW (N.D. Cal.). 13 pages.
IBM, "184 Pin DIMM Design Updates/Ramifications for Unbuffered and Registered DDR DIMMs," JC-42.5, Dec. 1999, pp. 1-12. 13 pages.
IBM, "Application Note DDR SDRAM Module Serial Presence Detect Definitions", Oct. 1999, pp. 1-34. 35 pages.
IBM, Micron Technology and Reliance Computer Corporation, "DDR SDRAM Registered DIMM," Design Specification, Revision 0.6, Nov. 1999. 62 pages.
IEEE Standard for Scalable Coherent Interface (SCI), "Microprocessor and Microcomputer Standards Subcommittee of the IEEE Computer Society," IEEE Std. 1596-1992, Aug. 2, 1993. 270 pages.
Inphi letter entitled "Re: License assurance for patents and applications essential to Fully Buffered DIMM proposal," dated Mar. 3, 2005, referenced in Excel Spreadsheet, entitled "Patents.xls." 1 page.
Inphi letter entitled "Re: License assurance for patents relavent to FBDIMM," dated Jun. 6, 2005, referenced in Excel Spreadsheet, entitled "Patents.xls." 1 page.
Institue of Electrical and Electronics Engineers, "802.3ab—A Tutorial Presentation," Slides, Mar. 1998. 63 pages Duplicate.
Intel Developer Forum, "Fully Buffered DIMM (FB-DIMM) Server Memory Architecture: Capacity, Perfomance, Reliability, and Longevity", Feb. 18, 2004. 106 pages.
Interlocutory Decision in Opposition Proceedings, dated Nov. 27, 2002, from European Patent No. EP 0 525 068. 38 pages.
International Preliminary Report dated Oct. 15, 2009, Patent Cooperation Treaty; International Application No. PCT/US2008/059268 filed Apr. 3, 2008. 11 pages.
International Search Report & The Written Opinion of the International Searching Authority, Patent Cooperation Treaty, Application No. PCT/US2008/059268 filed on Apr. 3, 2008, dated Sep. 23, 2008. 13 pages.
International Search Report and Written Opinion dated May 2, 2007 in International Application No. PCT/US2006/036894. 15 pages.
International Search Report in PCT/US05/17066, dated Nov. 2, 2005. 2 pages.
James, David V., "Scalable I/O Architecture for Buses," COMPCON Spring 1989, SCI, Nov. 28, 1988. 7 pages.
JC-42.3 Task Group Minutes, "Meeting on Synchronous DRAM Ballots," Las Vegas, Nevada, Jan. 21, 1993. 19 pages.
Jeddeloh, Joe, "Fully Buffered DIMM (FB-DIMM)," Advanced Systems Technology, Micron Technology, Inc. Apr. 15-16, 2004. 32 pages.
JEDEC Standard No. 21-C, pp. 4.20-4-1 through 4.20.4-69, 4.20.4-184 Pin, PC1600/2100 DDR SDRAM Registered DIMM Design Specification, Revision 1.2, Feb. 2002. 68 pages.
JEDEC Standard- "FBDIMM Specification: High Speed Differential PTP Link at 1.5V," JESD8-18, Sep. 2006, available at "http://www.jedec.org/download/search/JESD8-18.pdf". 60 pages.
John, Lizy Kurian, "VaWiRAM: A Variable Width Random Access Memory Module," 1995 IEEE, 9th International Conference on VLSI Design—1996. pp. 219-224. 6 pages.
Johnson, B., "Direct RDRAM Basic Architecture and Program Overview", Intel Developer Forum, pp. 1-14, (Sep. 1998). 28 pages.
Johnson, Dave et al., "Intel iAPX 432-VLSI Building Blocks for a Fault-Tolerant Computer," AFIPS Conference Proceedings, 1983 National Computer Conference, pp. 531-537 (May 16-19, 1983). 9 pages.
Joint Claim Construction and Prehearing Statement Pursuant to Patent Local Rule 4-3, dated Jul. 11, 2007, from *Rambus Inc.* v. *Micron Technology, Inc. et al.*, No. 06-00244 RMW (N.D. Cal.) 233 pages.
Jones, F. (United Memories, Inc.) "A new era of fast dynamic RAMs", IEEE Spectrum, Oct. 1992, pp. 43-49.
JP Office Action dated Dec. 27, 2011 in JP Application No. 2008-532397. 6 pages.
JP Office Action dated Jul. 11, 2012 in JP Application No. 2008-532397. 6 pages.
JP Office Action dated Jul. 6, 2012 in JP Application No. 2010-502293. 4 pages.
JP Office Action dated Mar. 13, 2012 re JP Application No. 2010-502293. 6 pages.

(56) **References Cited**

OTHER PUBLICATIONS

JP Response dated Jun. 12, 2012 for JP Application No. 2010-502293 and English Translations of JP Argument and Amendment. 17 pages.
Karabatsos, C., "Quad Band Memory (QBM) Technology", Kentron Technologies, Inc., Apr. 2001. 5 pages.
Kentron letter entitled "Re: License Assurance," dated Jan. 23, 2006, referenced in Excel Spreadsheet, entitled "Patents.xls." 1 page.
Kentron Technologies, Inc., "Quad Band Memory (QBM)," "The 'QBM Enabled' VIA PT880/PM880 Chipset Solutions with the Fastest Memory," published Jul. 21, 2003. 12 pages.
Kentron Technologies, Inc., Quad Band Memory Providing High Performance DDRI & II Based Memory Solutions, Apr. 15, 2004, JEDEX San Jose. 22 Pages.
Kristiansen et al., "Scalable Coherent Interface," Feb. 1989. 8 pages.
Kristiansen, E.H., Alnes, Knut, Bakka, Bjorn O, and Jenssen, Mant, "Scalable Coherent Interface," to appear in Eurobus Conference Proceedings, May 1989. 9 pages.
Kyeong-Sik Min, et al., "A Post-Package Bit-Repair Scheme Using Static Latches With Bipolar-Voltage Programmable Antifuse Circuit for High-Density DRAMs," IEEE Symposium on VLSI Circuits, Digest of Technical Papers, Jun. 14-16, 2001, pp. 67-68.
Lines et al., "High Speed Circuit Techniques in a 150Mhz 64M SDRAM," Proceedings of Memory Technology, Design & Testing International Workshop, San Jose, CA, Aug. 11, 1997, pp. 8-11. 4 pages.
Mac Williams, Pete, "PC Memory Directions for 1999 and Beyond", Intel Developer Forum, pp. 1-10, (Sep. 1998).
Macdonald, N., et al., "200Mb Wafer Memory," 1989 IEEE International Solid-State Circuits Conference, Digest of Technical Papers, 36th ISSCC, 1st Ed., pp. 240-241, Feb. 17, 1989.3 pages.
Manners, "Memory Survival Crisis," Electronics Weekly, Apr. 1, 1992, 1 page.
Manufacturer's Joint Motion for Summary Judgment of (1) Non-Infringement of the Farmwald Patents Under the Manufacturers' Proposed Claim Construction, or (2) Invalidity of the Farmwald Patents Under Rambus's Proposed Claim Construction and Memorandum of Points and Authorities, dated Oct. 9, 2007, from *Rambus Inc.* v. *Hynix Semiconductor Inc. et al.*, No. 05-00334 RMW (N.D. Cal.), *Rambus Inc.* v. *Samsung Electronics Co., Ltd. et al.*, No. 05-002298 RMW (N.D. Cal.), and *Rambus Inc.* v. *Micron Technology, Inc. et al.*, No. 06-00244 RMW (N.D. Cal.) 40 pages.
Manufacturer's Joint Opposition to Rambus's Motions for Summary Judgment of Literal Infringement, dated Nov. 2, 2007, from *Rambus Inc.* v. *Hynix Semiconductor Inc. et al.*, No. 05-00334 RMW (N.D. Cal.), *Rambus Inc.* v. *Samsung Electronics Co., Ltd. et al.*, No. 05-002298 RMW (N.D. Cal.), and *Rambus Inc.* v. *Micron Technology, Inc. et al.*, No. 06-00244 RMW (N.D. Cal.) 28 pages.
Manufacturer's Joint Reply Brief in Support of the Manufacturer's Joint Motion for Summary Judgment of (1) Non-Infringement of the Farmwald Patents Under the Manufacturers' Proposed Claim Construction, or (2) Invalidity of the Farmwald Patents Under Rambus's Proposed Claim Construction and Memorandum of Points and Authorities, dated Nov. 16, 2007, from *Rambus Inc.* v. *Hynix Semiconductor Inc. et al.*, No. 05-00334 RMW (N.D. Cal.), *Rambus Inc.* v. *Samsung Electronics Co., Ltd. et al.*, No. 05-002298 RMW (N.D. Cal.), and *Rambus Inc.* v. *Micron Technology, Inc. et al.*, No. 06-00244 RMW (N.D. Cal.) 31 pages.
Micron letter entitled "Re: Patent Application Relating to Recent FBDIMM Presentation," dated Sep. 16, 2005, referenced in Excel Spreadsheet, entitled "Patents.xls." 1 page.
Micron letter entitled "Re: Patent Applications Concerning Fully Buffered DIMMs," dated Dec. 2, 2003, referenced in Excel Spreadsheet, entitled "Patents.xls." 3 pages.
Micron, 240-Pin 256MB, 512MB, 1GB DDR2 SDRAM FBDIMM (SR, FB x 72) Features, Micron Technology, Inc., 2004, pp. 1-36.
Micron, 256MB, 512MB, 1GB (x72, ECC, DR) 168-Pin SDRAM RDIMM, Synchronous DRAM Module, Micron Technology, Inc., 2001, pp. 1 -28.
Micron's Preliminary Invalidity Contentions, dated May 11, 2007, from *Rambus Inc.* v. *Micron Technology, Inc. et al.*, No. 06-00244 RMW (N.D. Cal.) 3699 pages.
Microsoft Press Computer Dictionary, 3rd Ed., 1997, pp. 48 and 68. 4 pages.
Minutes of Meeting No. 33 JC-16 Committee on Voltage Level and Interface, Mar. 2, 1999, Las Vegas, Nevada. 12 pages.
Minutes of Meeting No. 75 JEDEC JC-42.3 Committee on RAM Memories, and referenced attachment "Y" of the presentation titled "SyncLink", May 24, 1995, New Orleans. 14 pages.
Minutes of Oral Proceedings, dated Jan. 24, 2008, from European Patent No. EP 1 004 956. 86 pages.
MoSys Incorporated Technology White Paper, Jul. 1994, pp. 1-15.
Mosys, "MD904 to MD920, Multibank DRAM (MDRAM) 128Kx32 to 656Kx32," Datasheet, Document DS01-2.1, MoSys Inc. California, Dec. 18, 1995, pp. 1-14. 14 pages.
Mosys, Inc., "MD904 to MD920, 1/2 to 2 1/2 MByte Multibank DRAM (MDRAM) 128Kx32 to 656Kx32," Preliminary Information, Feb. 21, 1997. 16 pages.
Muchmore, Simon, "Designing Computer Systems Based on Multibus II", New Electronics, vol. 20, No. 16, pp. 31-32, Aug. 11, 1987. 4 pages.
Nakase et al., "Source-Synchronization and Timing Vernier Techniques for 1.2 GB/s SLDRAM Interface," IEEE Journal of Solid-State Circuits, vol. 34, No. 4, Apr. 1999, pp. 494-501. 8 pages.
Ng, R. (Sun Microsystems Inc.) "Fast computer memories", IEEE Spectrum, Oct. 1992, pp. 36-39.
Notice of Opposition to European Patent No. 0 994 420 of Hynix Semiconductor Deutschland GmbH, dated Oct. 2, 2006 (with English-Language Translation). 90 pages.
Notice of Opposition to European Patent No. 0 994 420 of Micron Europe Ltd., dated Oct. 3, 2006. 79 pages.
Notice of Opposition to European Patent No. 0 994 420 of Micron Semiconductor (Deutschland) Gmbh, dated Oct. 2, 2006. 43 pages.
Notice of Opposition to European Patent No. 1 022 641 of Micron Europe Ltd., dated Dec. 7, 2007. 44 pages.
Notice of Opposition to European Patent No. 1 022 642 of Micron Europe Ltd., dated Sep. 10, 2001. 45 pages.
Notice of Opposition to European Patent No. 1 197 830 of Hynix Semiconductor Deutschland GmbH, dated Jul. 3, 2007 (with English-language translation). 132 pages.
Notice of Opposition to European Patent No. 1 197 830 of Micron Europe Limited, dated Jul. 3, 2007. 93 pages.
Notice of Opposition to European Patent No. EP 0 525 068, of Hyundai Electronics Deutschland GmbH, dated Dec. 15, 2000 (with English-Language Translation). 88 pages.
Notice of Opposition to European Patent No. EP 0 525 068, of Infineon Technologies AG, dated Nov. 23, 2000 (with English-language translation). 50 pages.
Notice of Opposition to European Patent No. EP 0 525 068, of Micron Europe Ltd., dated Oct. 26, 2000. 27 pages.
Notice of Opposition to European Patents No. 1 004 956 of Micron Europe Ltd., dated Oct. 3, 2001. 43 pages.
Opinion of the Commission on Remedy, from in the Matter of Rambus Inc., Docket No. 9302 (FTC) No Date Listed. 21 pages.
Order Denying Hynix's Motion for Partial Reconsideration of Claim Construction and Related Summary Judgment Orders, dated Feb. 21, 2006, from *Hynix Semiconductor Inc. et al.* v. *Rambus Inc.*, No. 00-20905 RMW (N.D. Cal.) 11 pages.
Order Denying Rambus's Motion for Summary Judgment of Infringement Relating to "Delay Locked Loop," dated Feb. 23, 2006, from *Hynix Semiconductor Inc. et al.* v. *Rambus Inc.*, No. 00-20905 RMW (N.D. Cal.) 8 pages.
Order Denying Rambus's Motion for Summary Judgment of Infringement Relating to Access Time Register Limitations, dated Mar. 13, 2006, from *Hynix Semiconductor Inc. et al.* v. *Rambus Inc.*, No. 00-20905 RMW (N.D. Cal.) 3 pages.
Order Denying Rambus's Motion for Summary Judgment of Infringement Relating to the "In Response to" Rising/Falling Claim Limi-

(56) **References Cited**

OTHER PUBLICATIONS

tation, dated Mar. 12, 2005, from *Hynix Semiconductor et al.* v. *Rambus Inc.*, No. 00-20905 RMW (N.D. Cal.) 6 pages.
Order Granting Leave to File Motion for Partial Reconsideration of Claim Construction and Summary Judgment Orders, dated Oct. 3, 2005, from *Hynix Semiconductor Inc. et al.* v. *Rambus Inc.*, No. 00-20905 RMW (N.D. Cal.) 3 pages.
Order Granting Reexamination, mailed on Jan. 9, 2008, from Reexamination Control No. 95/001,013. 25 Pages.
Oskin, Mark, et al., "Operating Systems Techniques for Parallel Computation in Intelligent Memory," Parallel Processing Letters, vol. 12, Nos. 3 & 4, 2002, pp. 311-326. 16 pages.
Oskin, Mark, et al., "Reducing Cost and Tolerating Defects in Page-Based Intelligent Memory," Proceedings 2000 International Conference on Computer Design, Sep. 17-20, 2000, pp. 276-284.
Paris et al., "WP 24.3: A 800 MB/s 72 Mb SLDRAM with Digitally-Calibrated DLL," ISSCC, 0-7803-5129-0-99, Slide Supplement, IEEE, 1999. 10 pages.
Patentica letter emtitled "Re: Patents and IP concerning Fully Buffered DIMMS and AMB Devices," dated Dec. 18, 2004, referenced in Excel Spreadsheet, entitled "Paatents.xls." 4 pages.
Pawlowski, J. Thomas, Hybrid Memory Cube (HMC) dated Aug. 4, 2011, Micron Technology, Inc. 24 Pages.
PCT International Search Report PCT/US00/41554, dated Jun. 27, 2001. 4 pages.
Poulton, John, "Signaling in High Performance Memory Systems," IEEE Solid State Circuits Conference, slides 1-59, Feb. 1999. 30 pages.
Preliminary publication of JEDEC Semiconductor Memory Standards, JEDEC 64 MEG: x4, x8, x16 DDR SDRAM, JEDEC, Aug. 1999. 73 pages.
QBM Alliance, Platform Conference, Quad Band Memory: DDR 200/266/333 devices producing DDR400/533/667, Jan. 23-24, 2002. 33 pages.
Rambus Inc. Data Sheet, "16/18Mbit (2Mx8/9) and 64/72Mbit (8Mx8/9) Concurrent RDRAM", Mar. 1996, pp. 1-30. 30 pages.
Rambus Inc., "16/18Mbit (2Mx8/9) & 64/72 Mbit (8Mx8/9) Concurrent RDRAM—Advance Information," Rambus Inc. Data Sheet, Jul. 1996. 61 pages.
Rambus Inc., "8/9-Mbit (1Mx8/9) & 16/18Mbit (2Mx8/9) RDRAM—Preliminary Information," Rambus Inc. Data Sheet, Mar. 1, 1996. 30 pages.
Rambus Inc., "Direct RDRAM 256/288-Mbit (512Kx16/18x32s)", Aug. 1999, pp. 1-66.
Rambus Inc., "RDRAM Annotated Specification 4.1-2," Apr. 29, 1997. 366 Pages.
Rambus Inc.'s Opposition to Hynix's Motion for Administrative Relief to File Hynix's Second Supplemental Brief in Support of Its Motion for New Trial on Invalidity Due to Prior Art, dated Jan. 9, 2008, from *Hynix Semiconductor Inc. et al.* v. *Rambus Inc.*, No. 00-20905 RMW (N.D. Cal.) 3 pages.
Registered Letter re Communication Pursuant to Article 96(2) EPC in EP Application No. 05001769.8, dated Mar. 9, 2007. 3 pages.
Request for Declaration of Interference, filed on Apr. 13, 2006 in U.S. Appl. No. 11/203,652, including exhibits A through K. 171 pages.
Response to Restriction Requirement, U.S. Appl. No. 11/697,572, filed Apr. 6, 2007, dated Jan. 12, 2009. 11 pages.
Rhoden, Desi Advanced Memory International, Inc., Platform99, Standard DRAM Futures and DDR Infrastructures, Jul. 21 & 22, 1999. 48 pages.
Rudack, M., et al., "Yield Enhancement Considerations for a Single-Chip Multiprocessor System With Embedded DRAM," Proceedings 1999 IEEE International Symposium on Defect and Fault Tolerance in VLSI Systems, Nov. 1-3, 1999, pp. 31-39.
Salters, R.H.W. (Phillips Research Laboratories), "Fast DRAMS for sharper TV", IEEE Spectrum, Oct. 1992, pp. 40-42.
Samsung Electronics Inc., "KMM377S1620CT2 SDRAM Module Datasheet," Rev. 1 (Nov. 1998), Preliminary, pp. 1-12. 12 pages.
Samsung letter, dated Oct. 25, 2004, referenced in Excel Spreadsheet, entitled "Patents.xls." 1 page.
Schanke, "Proposal for Clock Distribution in SCI", SCI, May 5, 1989 (dup of 3661).
Schanke, Morten, "Proposal for Clock Distribution in SCI", SCI-B [1 and Sci 2], May 5, 1989. 5 pages.
Shaeffer, Ian re U.S. Appl. No. 12/703,521, filed Feb. 10, 2010 re Office Action dated Sep. 30, 2011 re Consideration of the Information Disclosure Statement filed submitted Sep. 21, 2011. 4 Pages
Shaeffer, Ian, U.S. Appl. No. 12/424,442, filed Apr. 15, 2009 re Issue Fee Transmittal mailed Feb. 4, 2010. 2 pages.
Shaeffer, Ian, U.S. Appl. No. 12/424,442, filed Apr. 15, 2009 re Notice of Allowance and Fee(s) Due dated Nov. 6, 2009. 25 pages.
Shaeffer, Ian, U.S. Appl. No. 12/424,442, filed Apr. 15, 2009 re Office Action dated Jan. 28, 2010. 5 pages.
Shaeffer, Ian, U.S. Appl. No. 12/703,521, filed Feb. 10, 2010, Comments on Statement of Reasons for Allowance dated Apr. 5, 2011. 1 Page.
Shaeffer, Ian, U.S. Appl. No. 12/703,521, filed Feb. 10, 2010, Information Disclosure Statement dated Nov. 16, 2011. 12 pages.
Shaeffer, Ian, U.S. Appl. No. 12/703,521, filed Feb. 10, 2010, Information Disclosure Statement dated Mar. 11, 2011. 4 Pages
Shaeffer, Ian, U.S. Appl. No. 12/703,521, filed Feb. 10, 2010, Information Disclosure Statement submitted Apr. 4, 2011. 30 pages.
Shaeffer, Ian, U.S. Appl. No. 12/703,521, filed Feb. 10, 2010, Notice of Allowance and Fee(s) Due dated Jan. 7, 2011. 24 Pages.
Shaeffer, Ian, U.S. Appl. No. 12/703,521, filed Feb. 10, 2010, Information Disclosure Statement mailed Jan. 5, 2012. 18 pages
Shaeffer, Ian, U.S. Appl. No. 13/149,682, filed May 31, 2011 re Information Disclosure Statement dated Oct. 6, 2011. 5 Pages
Shaeffer, Ian, U.S. Appl. No. 13/149,682, filed May 31, 2011 re Information Disclosure Statement dated Oct. 6, 2011. 14 Pages
Shaeffer, Ian, U.S. Appl. No. 13/149,682, filed May 31, 2011, re Correction to Information Disclosure Statement of Nov. 16, 2011, dated Dec. 12, 2011. 5 pages.
Shaeffer, Ian, U.S. Appl. No. 703,521, filed Feb. 10, 2010, re Resubmission of Information Disclosure Statements of Mar. 11, 2011, Apr. 4, 2011, and Nov. 18, 2011, dated Dec. 9, 2011. 17 pages.
SLDRAM Inc., "SLD4M18DR400 4 MEG X 18 SLDRAM: 400 Mb/s/pin SLDRAM 4 M x 18 SLDRAM Pipelined, Eight Bank, 2.5 V Operation," Jul. 9, 1998. 69 pages.
The Institute of Electrical and Electronics Engineering, Inc., "IEEE Standard for High-Bandwidth Memory Interface Based on Scalable Coherent Interface SCI Signaling Technology (RamLink)," 1996, pp. 1-99. 100 pages.
Tsern, Eli, U.S. Appl. No. 12/030,332, filed Feb. 13, 2008, re Response to Office Action dated Jun. 18, 2012. 21 pages.
Tsern, Ely re U.S. Appl. No. 12/030,332, filed Feb. 13, 2008 re Information Disclosure Statement submitted Oct. 28, 2011. 4 Pages
Tsern, Ely, et al., U.S. Appl. No. 12/030,332, filed Feb. 13, 2008 re Response to Office Action dated Jun. 18, 2012. 21 pages.
Tsern, Ely, U.S. Appl. No. 11/460,899, filed Jul. 28, 2006 re Information Disclosure Statement mailed Jan. 21, 2010. 2 pages
Tsern, Ely, U.S. Appl. No. 11/460,899, filed Jul. 28, 2006 re Office Action dated Feb. 12, 2010. 4 pages.
Tsern, Ely, U.S. Appl. No. 11/460,899, filed Jul. 28, 2006 re Response to Non-Final Office Action dated Nov. 30, 2009, 24 pages.
Tsern, Ely, U.S. Appl. No. 12/030,332, filed Feb. 13, 2008, re Response to Office Action Under 37 C.F.R. ss 1.111 dated Jan. 4, 2012. 18 pages.
Tsern, Ely, US. Appl. No. 12/030,332, filed Feb. 13, 2008 re Information Disclosure Statement mailed Jan. 21, 2010, 2 pages
Tsern, Ely, U.S. Appl. No. 12/424,442, filed Apr. 15, 2009 re Information Disclosure Statement mailed Jan. 21, 2010. 2 pages
Tsern, Ely, U.S. Appl. No. 12/030,332, filed Feb. 13, 2008, Final Office Action dated Apr. 10, 2012. 66 pages.
Tsern, Ely, U.S. Appl. No. 12/030,332, filed Feb. 13, 2008, Information Disclosure Statement dated Nov. 16, 2011. 12 pages.
Tsern, Ely, U.S. Appl. No. 12/030,332, filed Feb. 13, 2008, re Correction to Information Disclosure Statement of Nov. 16, 2011, dated Dec. 12, 2011. 5 pages.
Tsern, Ely, U.S. Appl. No. 12/030,332, filed Feb. 13, 2008, Response dated Apr. 4, 2011 to the Office Action. 83 Pages.

(56) **References Cited**

OTHER PUBLICATIONS

Tsern, Ely, U.S. Appl. No. 13/149,682, filed May 31, 2011, Information Disclosure Statement dated Nov. 16, 2011. 12 pages.
U.S. Non-Final Office Action dated Sep. 3, 2009 re U.S. Appl. No. 11/460,899, filed Jul. 28, 2006. 82 pages.
Vogt, Pete D. U.S. Appl. No. 10/859,060, filed May 31, 2004, Application as Filed. 60 pages.
Vogt, Pete D. U.S. Appl. No. 10/713,868, filed Nov. 14, 2003, Application as Filed. 60 pages.
Vogt, Pete D., "Early CRC Delivery for Partial Frame," U.S. Appl. No. 10/714,025, filed Nov. 14, 2003. 60 pages.
Vogt, Pete D., U.S. Appl. No. 10/714,026, filed Nov. 14, 2003, Application as Filed. 61 pages.
Vogt, Pete D., U.S. Appl. No. 10/883,474, filed Jun. 30, 2004, Application as Filed. 68 pages.
Vogt, Pete D., U.S. Appl. No. 10/859,438, filed May 31, 2004, Application as Filed. 57 pages.
Vogt, Pete D., U.S. Appl. No. 10/882,999, filed Jun. 30, 2004, Application as Filed. 63 pages.
Vogt, Pete D., U.S. Appl. No. 10/858,850, filed May 31, 2004, Application as Filed. 59 pages.
Vogt, Pete. "Fully Buffered DIMM (FB-DIMM) Server Memory Architecture: Capacity, Performance, Reliability, and Longevity", dated Feb. 18, 2004. 33 pages.
Volz, Richard A. et al., "Position Paper on Global Clock for the Futurebus +" SCI, 1989. 7 pages.
Weber, Fred "The AMD Athlon Processor: Future Directions", AMD, May, 1999. 25 pages.
Wiggers, H., "SyncLink a Proposal for an Implementation of IEEE P1596.4", Hewlett Packard, pp. 1-20 (Mar 1995).
Wintec letter entitled "Re: Disclosure of Patent Pending—Adaptive Memory Module by Wintec Industries, Inc.," dated Apr. 2, 2003, referenced in Excel Spreadsheet, entitled "Patents.xls." 1 page.
Wintec letter entitled "Re: Patent Application Concerning JC-42.5 Item 1467.00 & JC-42-ddr3 Item 1349," dated Mar. 19, 2003, referenced in Excel Spreadsheet, entitled "Patents.xls." 1 page.
Yih, Jih-Shyr, "Built-In Self-Repair of Embedded VLSI Arrays by Electronic Neural Nets (Neural Nets)," University of Michigan, The Sciences and Engineering, vol. 52-01 B, 1990. 155 pages.
U.S. Appl. No. 16/214,986, filed Dec. 10, 2018.
U.S. Appl. No. 15/832,468, filed Dec. 5, 2017, U.S. Pat. No. 10,381,067.
U.S. Appl. No. 15/389,409, filed Dec. 22, 2016, U.S. Pat. No. 9,865,329.
U.S. Appl. No. 14/801,723, filed Jul. 16, 2015, U.S. Pat. No. 9,563,583.
U.S. Appl. No. 14/015,648, filed Aug. 30, 2013, U.S. Pat. No. 9,117,035.
U.S. Appl. No. 13/149,682, filed May 31, 2011, U.S. Pat. No. 8,539,152.
U.S. Appl. No. 12/703,521, filed Feb. 10, 2010, U.S. Pat. No. 8,108,607.
U.S. Appl. No. 12/,424,442, filed Apr. 15, 2009, U.S. Pat. No. 7,685,364.
U.S. Appl. No. 11/697,572, filed Apr. 6, 2007, U.S. Pat. No. 7,562,271.
U.S. Appl. No. 11/460,899, filed Jul. 28, 2006, U.S. Pat. No. 7,729,151.
U.S. Appl. No. 11/236,401, filed Sep. 26, 2005, U.S. Pat. No. 7,464,225.

* cited by examiner

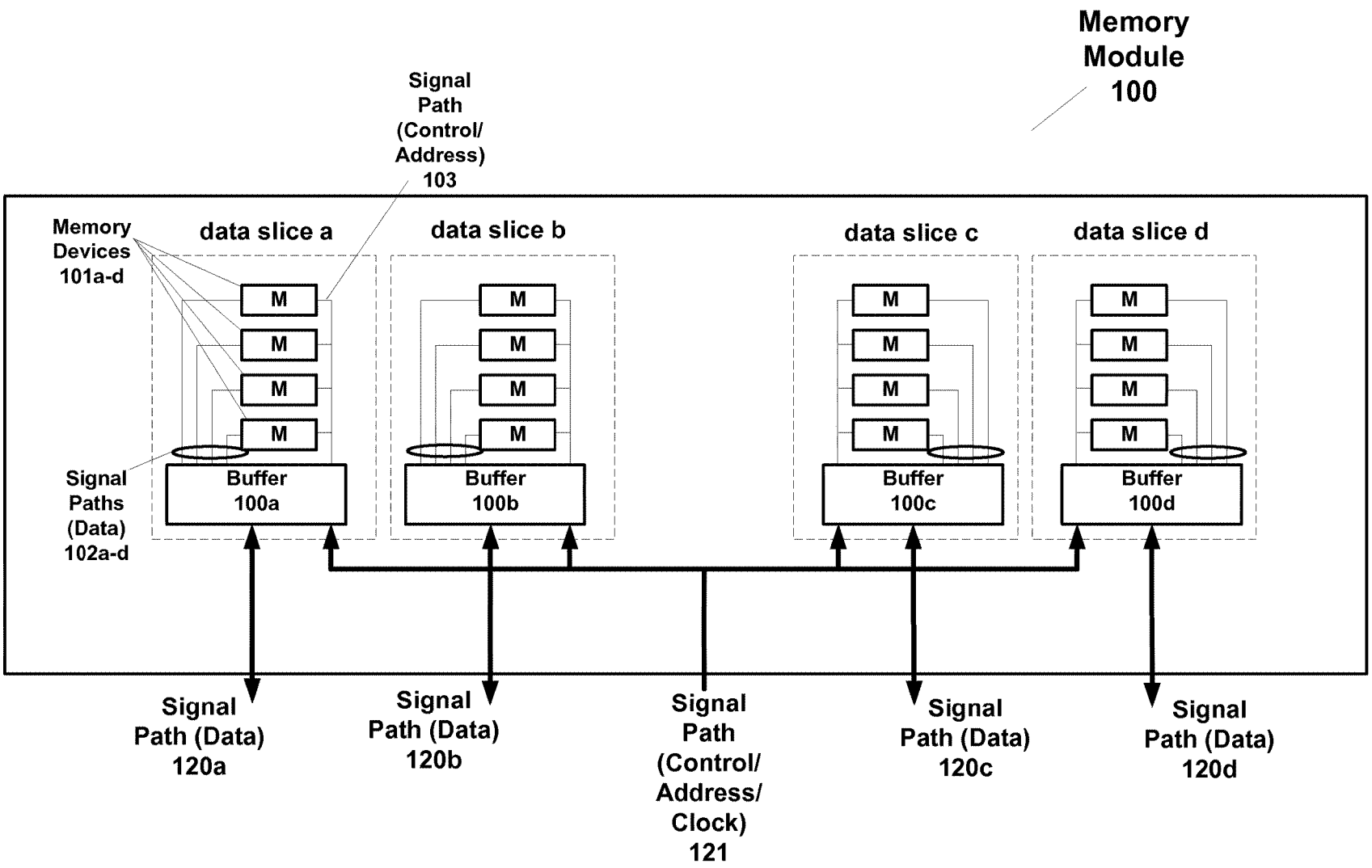
Memory Module 100
Signal Path (Control/ Address) 103
Memory Devices 101a-d
data slice a
data slice b
data slice c
data slice d
M
Buffer 100a
Buffer 100b
Buffer 100c
Buffer 100d
Signal Paths (Data) 102a-d
Signal Path (Data) 120a
Signal Path (Data) 120b
Signal Path (Control/ Address/ Clock) 121
Signal Path (Data) 120c
Signal Path (Data) 120d

Fig. 1

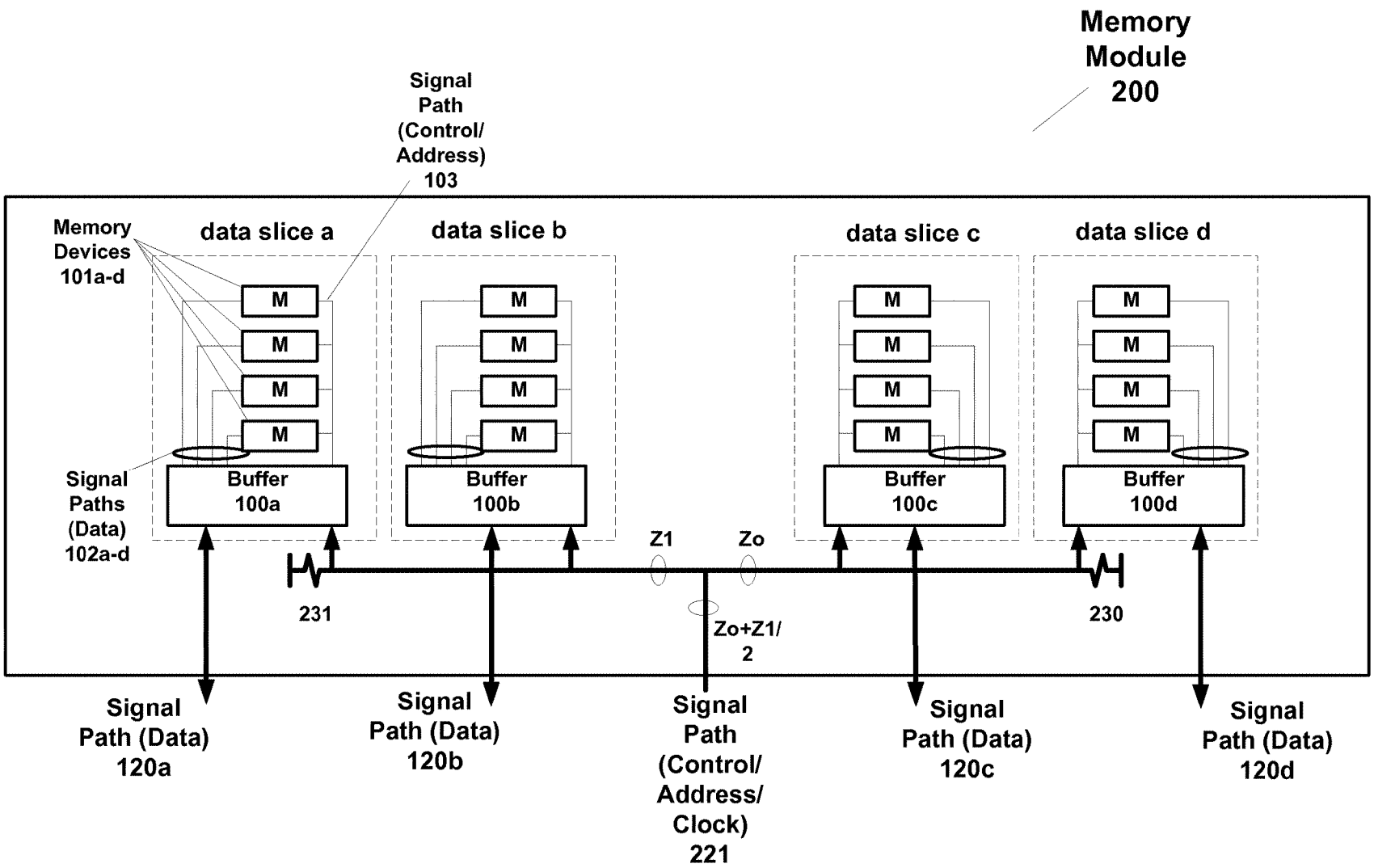
Memory Module 200
Signal Path (Control/ Address) 103
Memory Devices 101a-d
data slice a
data slice b
data slice c
data slice d
M
Signal Paths (Data) 102a-d
Buffer 100a
Buffer 100b
Buffer 100c
Buffer 100d
Z1
Zo
231
230
Zo+Z1/ 2
Signal Path (Data) 120a
Signal Path (Data) 120b
Signal Path (Control/ Address/ Clock) 221
Signal Path (Data) 120c
Signal Path (Data) 120d

Fig. 2

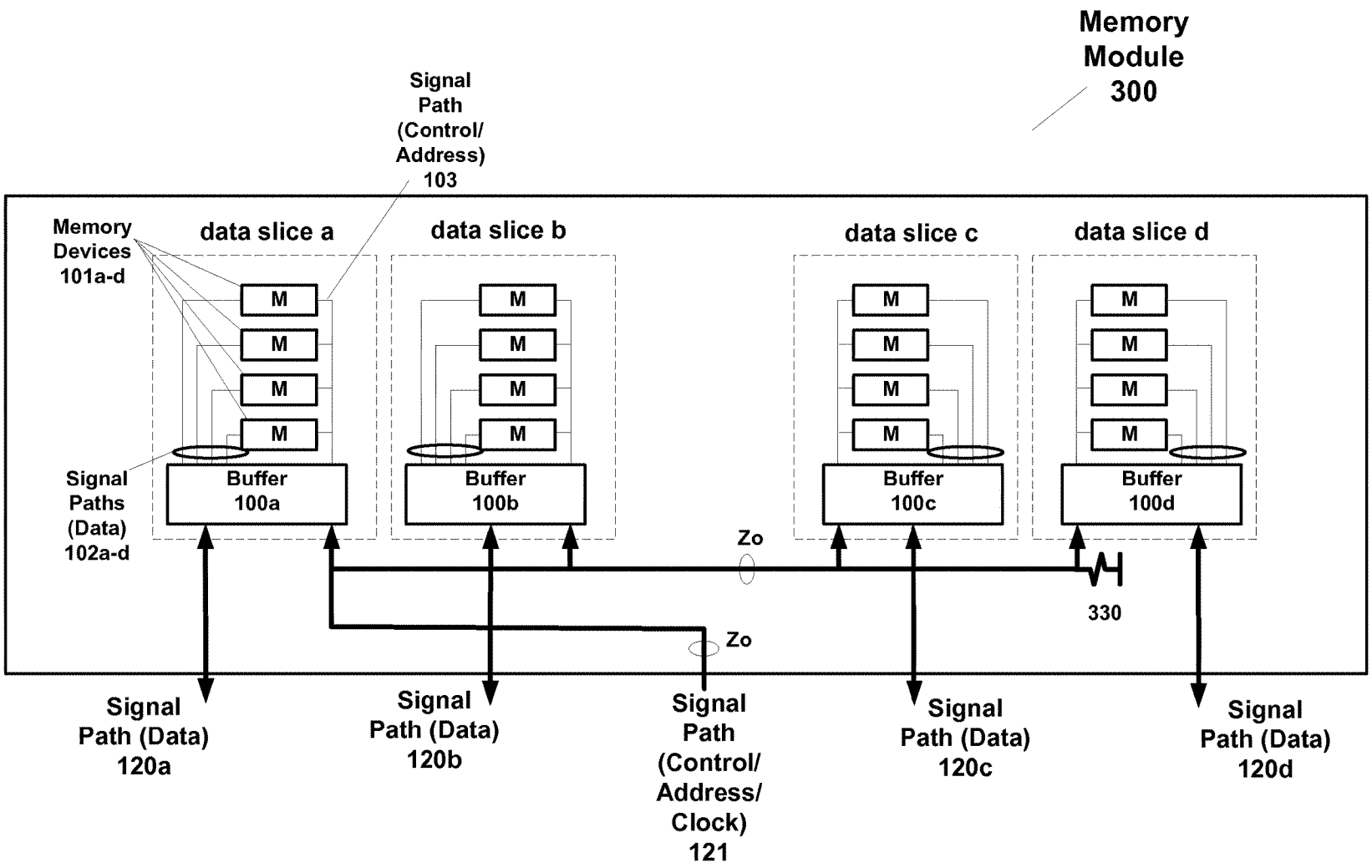
Memory Module 300
Signal Path (Control/ Address) 103
Memory Devices 101a-d
data slice a
data slice b
data slice c
data slice d
M
Buffer 100a
Buffer 100b
Buffer 100c
Buffer 100d
Signal Paths (Data) 102a-d
Zo
Zo
330
Signal Path (Data) 120a
Signal Path (Data) 120b
Signal Path (Control/ Address/ Clock) 121
Signal Path (Data) 120c
Signal Path (Data) 120d

Fig. 3

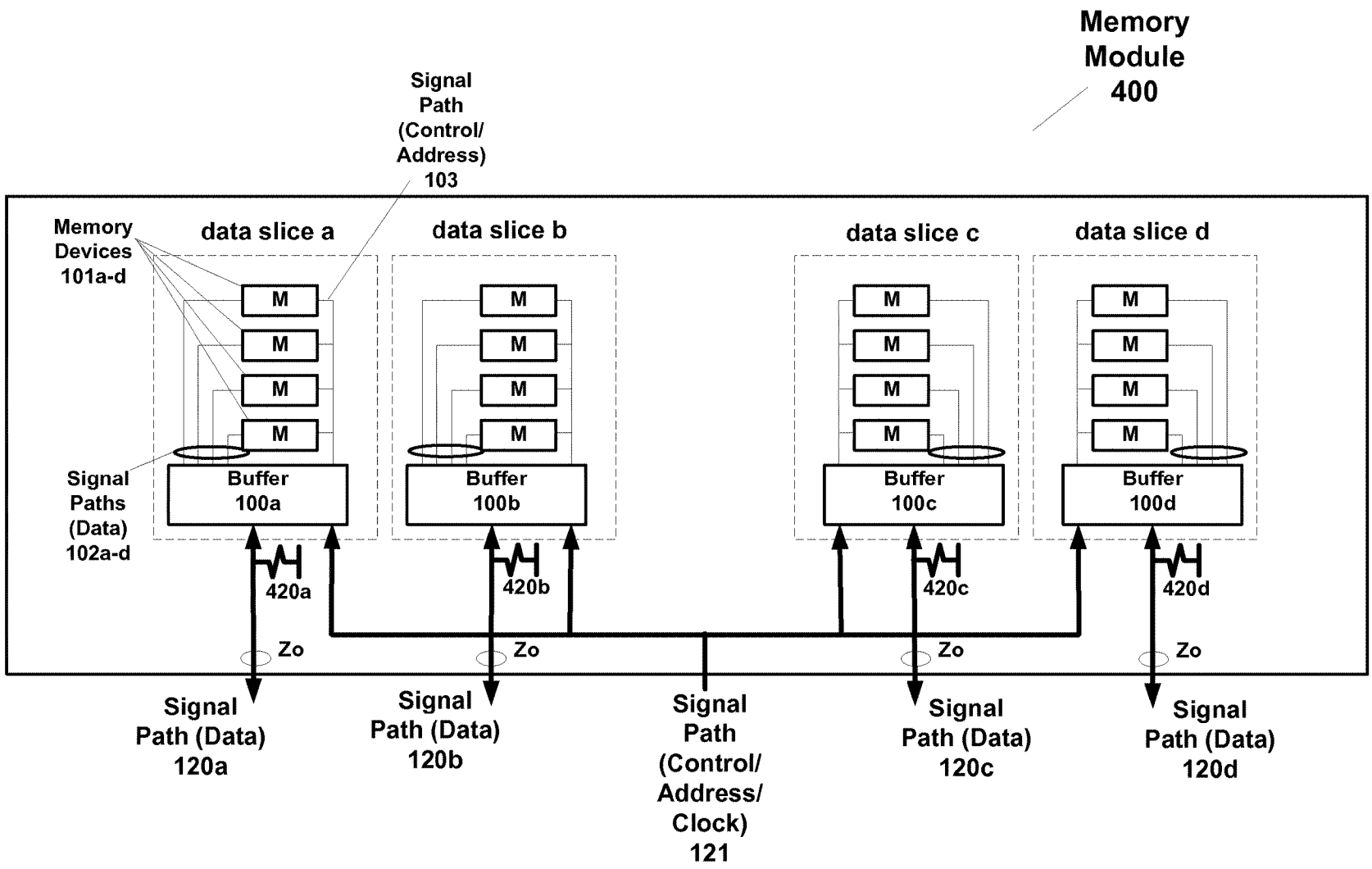
Memory Module 400
Signal Path (Control/ Address) 103
Memory Devices 101a-d
data slice a
data slice b
data slice c
data slice d
M
Signal Paths (Data) 102a-d
Buffer 100a
Buffer 100b
Buffer 100c
Buffer 100d
420a
420b
420c
420d
Zo
Signal Path (Data) 120a
Signal Path (Data) 120b
Signal Path (Control/ Address/ Clock) 121
Signal Path (Data) 120c
Signal Path (Data) 120d

Fig. 4

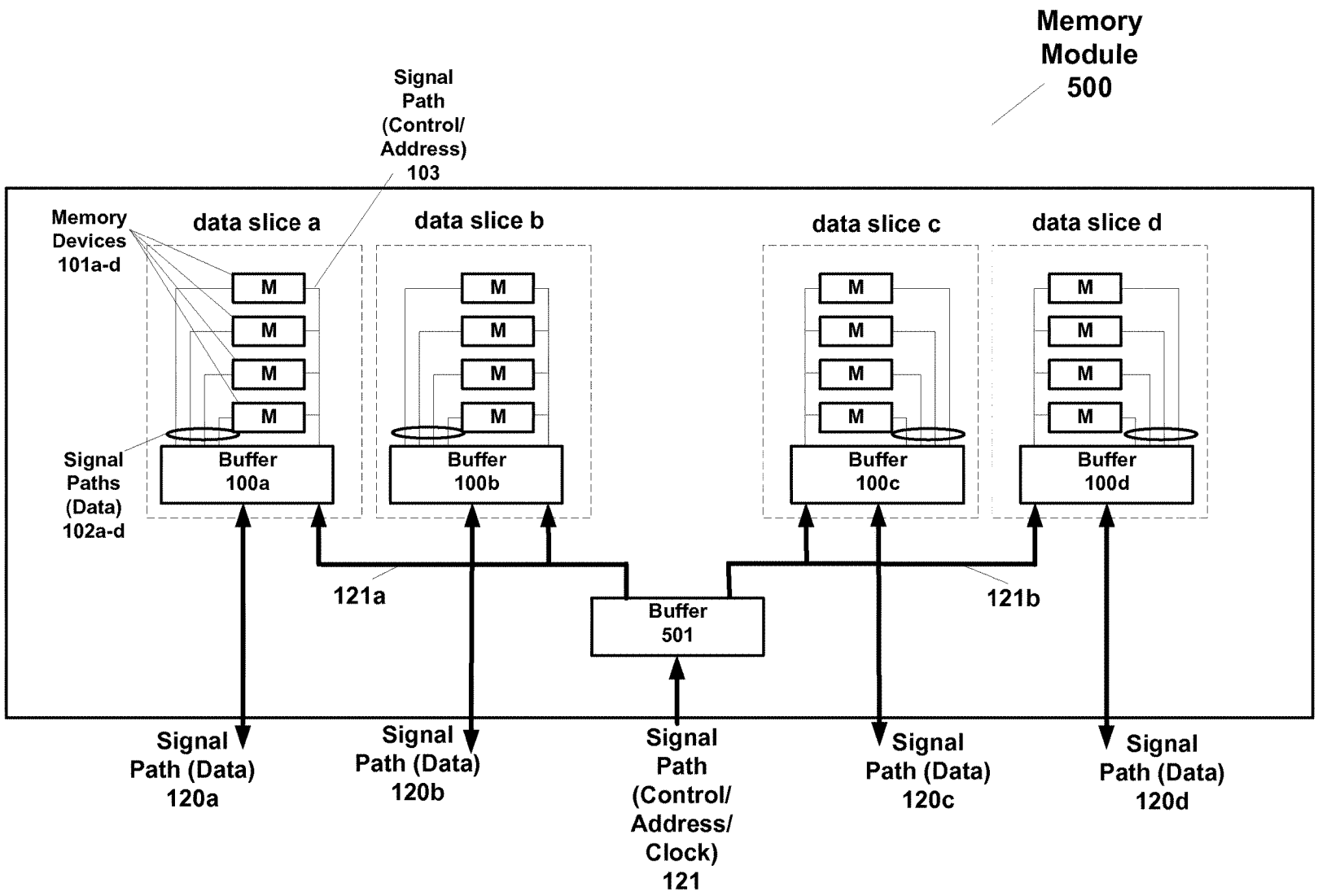
Memory Module 500
Signal Path (Control/ Address) 103
Memory Devices 101a-d
data slice a
data slice b
data slice c
data slice d
M
Signal Paths (Data) 102a-d
Buffer 100a
Buffer 100b
Buffer 100c
Buffer 100d
121a
121b
Buffer 501
Signal Path (Data) 120a
Signal Path (Data) 120b
Signal Path (Control/ Address/ Clock) 121
Signal Path (Data) 120c
Signal Path (Data) 120d

Fig. 5

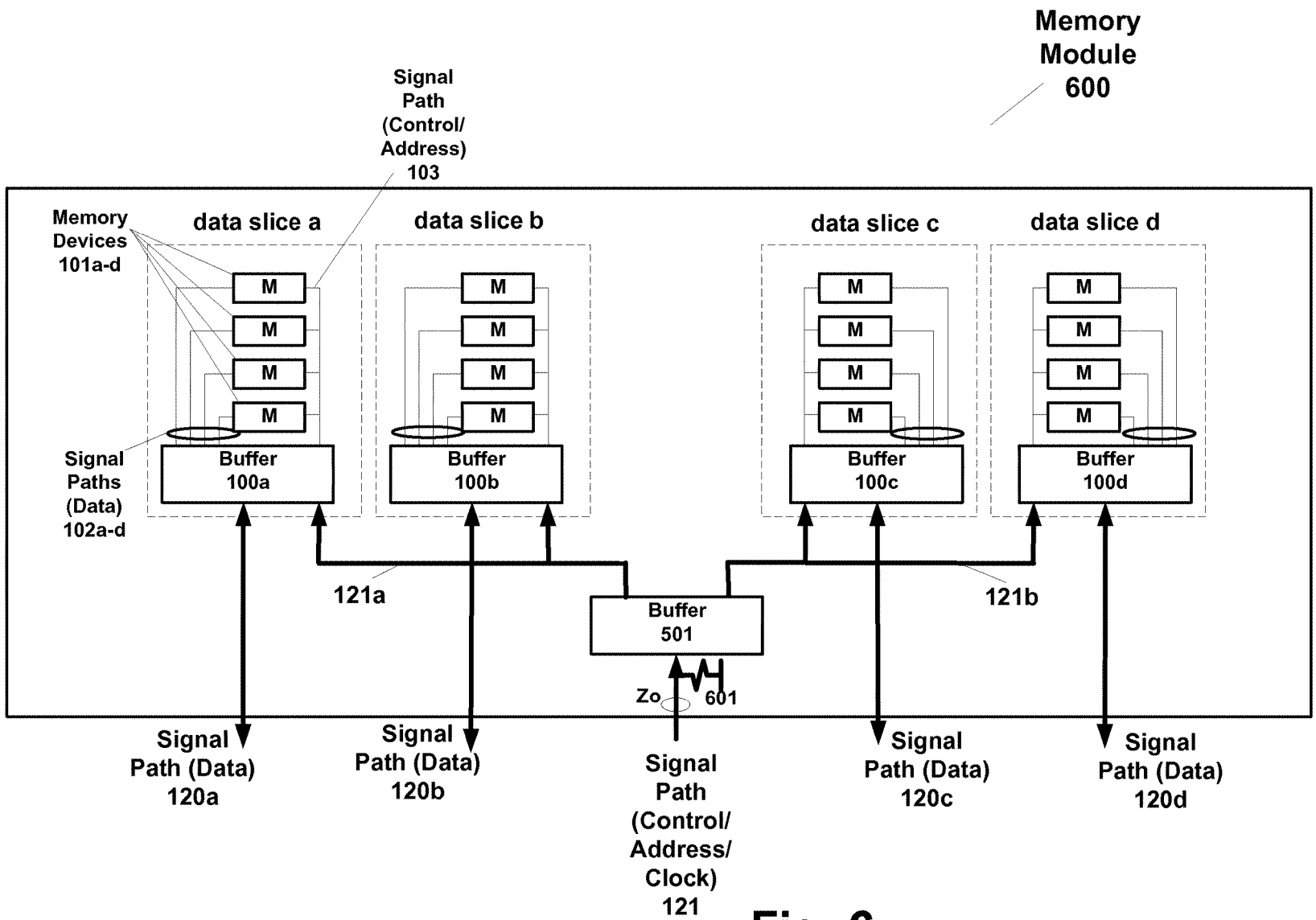
Memory Module 600
Signal Path (Control/ Address) 103
Memory Devices 101a-d
data slice a
data slice b
data slice c
data slice d
M
Signal Paths (Data) 102a-d
Buffer 100a
Buffer 100b
Buffer 100c
Buffer 100d
121a
121b
Buffer 501
Zo
601
Signal Path (Data) 120a
Signal Path (Data) 120b
Signal Path (Control/ Address/ Clock) 121
Signal Path (Data) 120c
Signal Path (Data) 120d

Fig. 6

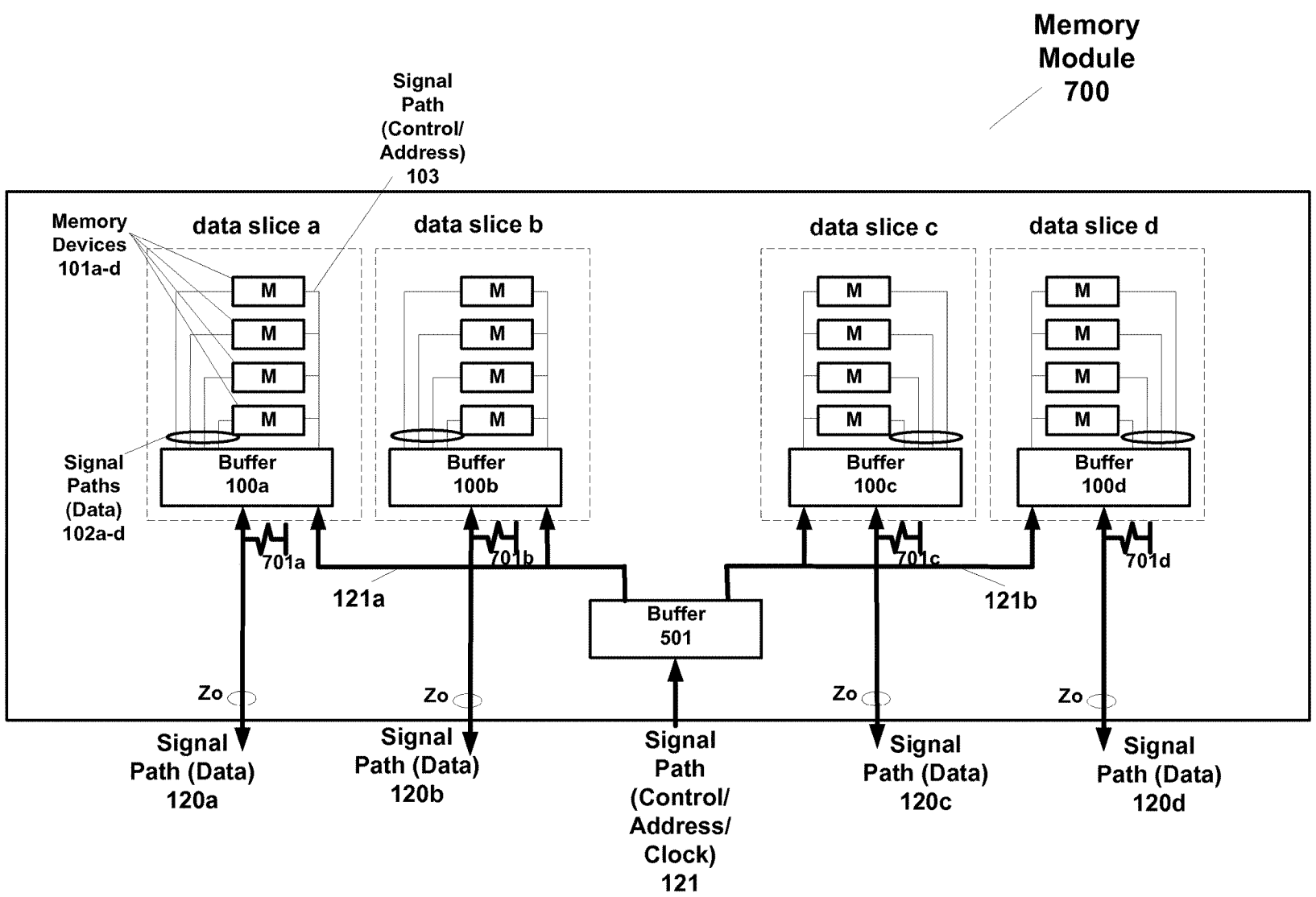
Memory Module 700
Signal Path (Control/ Address) 103
Memory Devices 101a-d
data slice a
data slice b
data slice c
data slice d
M
Signal Paths (Data) 102a-d
Buffer 100a
Buffer 100b
Buffer 100c
Buffer 100d
701a
701b
701c
701d
121a
121b
Buffer 501
Zo
Signal Path (Data) 120a
Signal Path (Data) 120b
Signal Path (Control/ Address/ Clock) 121
Signal Path (Data) 120c
Signal Path (Data) 120d

Fig. 7

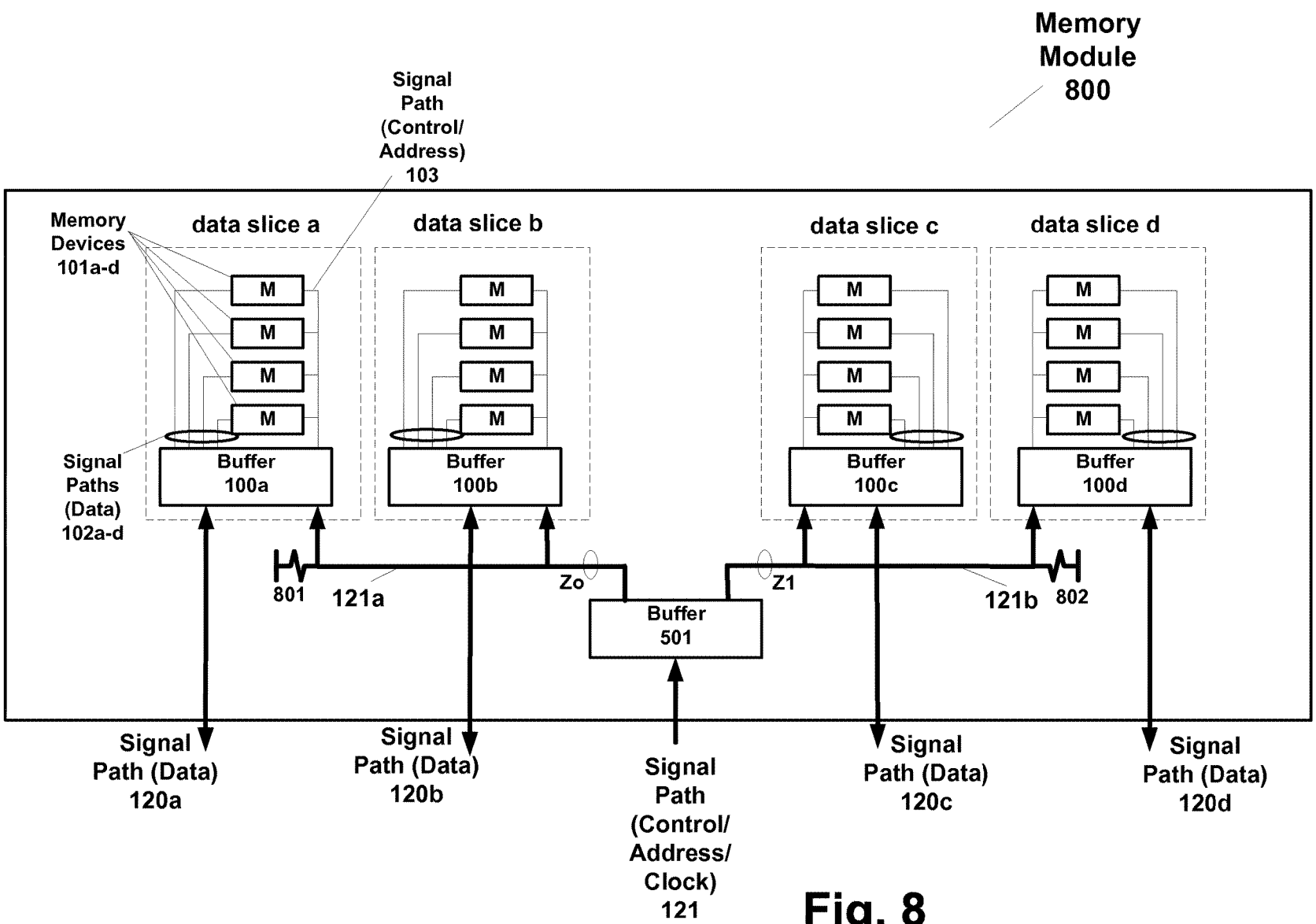
Memory Module 800
Signal Path (Control/ Address) 103
Memory Devices 101a-d
data slice a
data slice b
data slice c
data slice d
M
Signal Paths (Data) 102a-d
Buffer 100a
Buffer 100b
Buffer 100c
Buffer 100d
801
121a
Zo
Z1
121b
802
Buffer 501
Signal Path (Data) 120a
Signal Path (Data) 120b
Signal Path (Control/ Address/ Clock) 121
Signal Path (Data) 120c
Signal Path (Data) 120d

Fig. 8

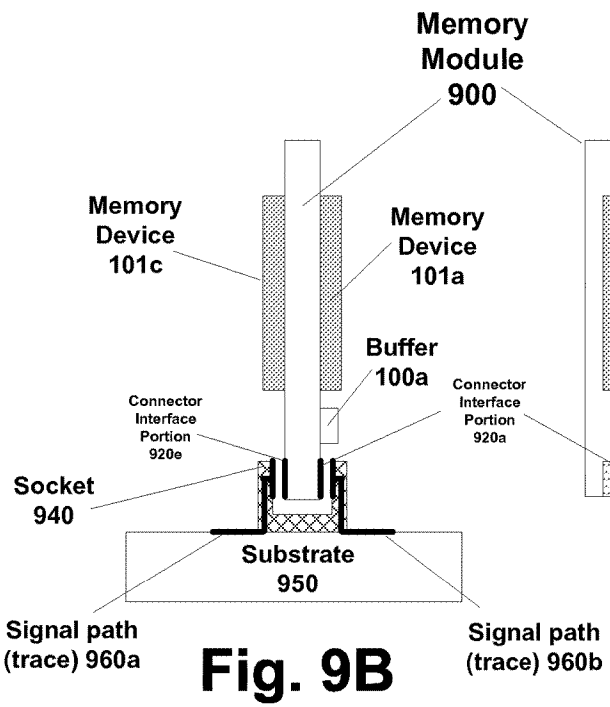

Fig. 9B

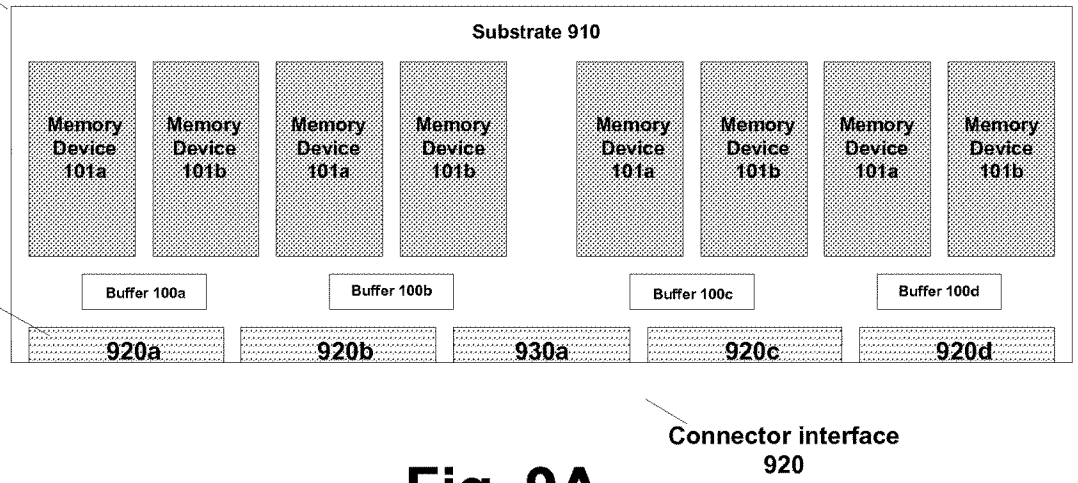

Fig. 9A

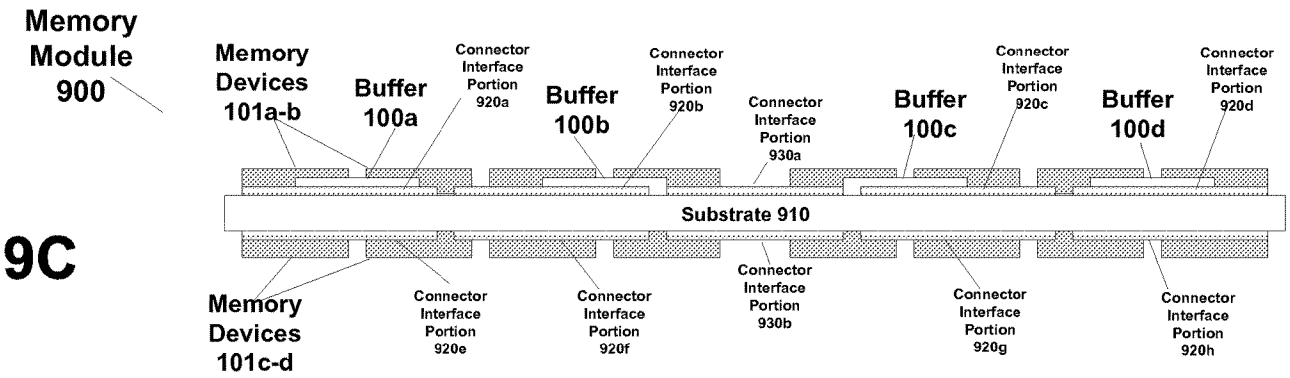

Fig. 9C

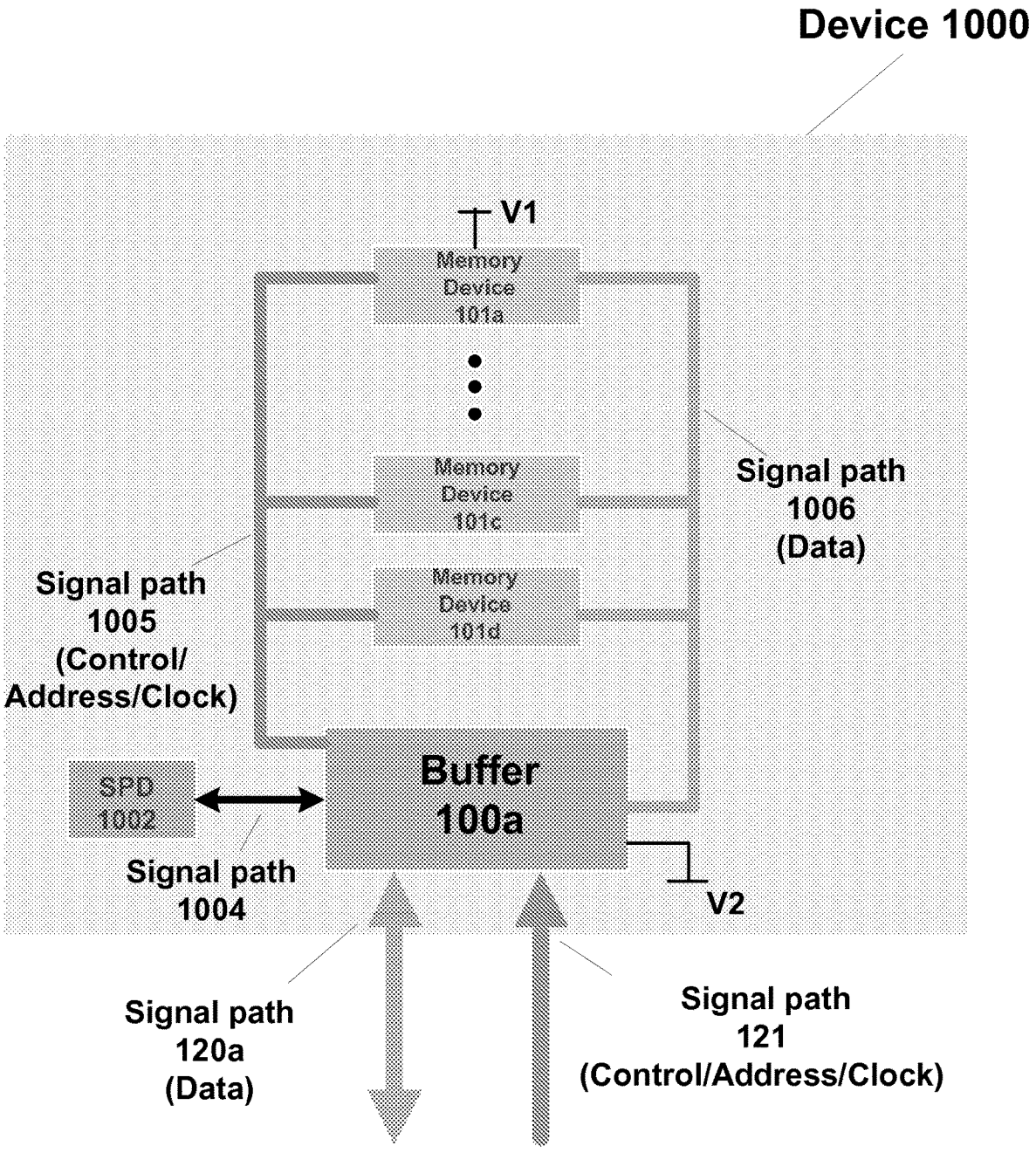
Device 1000
V1
Memory Device 101a
Memory Device 101c
Memory Device 101d
Signal path 1006 (Data)
Signal path 1005 (Control/ Address/Clock)
SPD 1002
Buffer 100a
Signal path 1004
V2
Signal path 120a (Data)
Signal path 121 (Control/Address/Clock)

Fig. 10

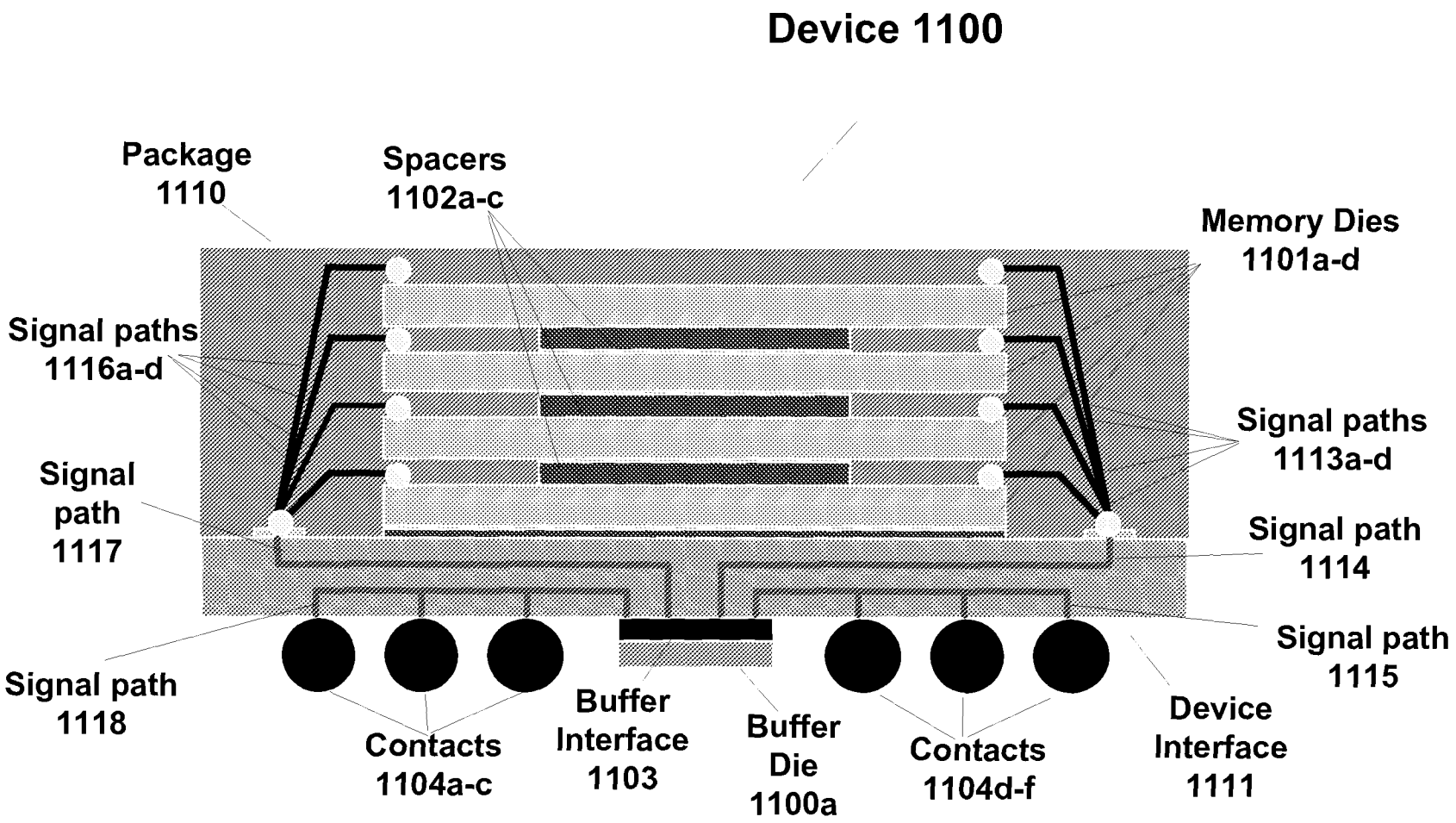
Device 1100
Package 1110
Spacers 1102a-c
Memory Dies 1101a-d
Signal paths 1116a-d
Signal paths 1113a-d
Signal path 1117
Signal path 1114
Signal path 1115
Signal path 1118
Contacts 1104a-c
Buffer Interface 1103
Buffer Die 1100a
Contacts 1104d-f
Device Interface 1111

Fig. 11

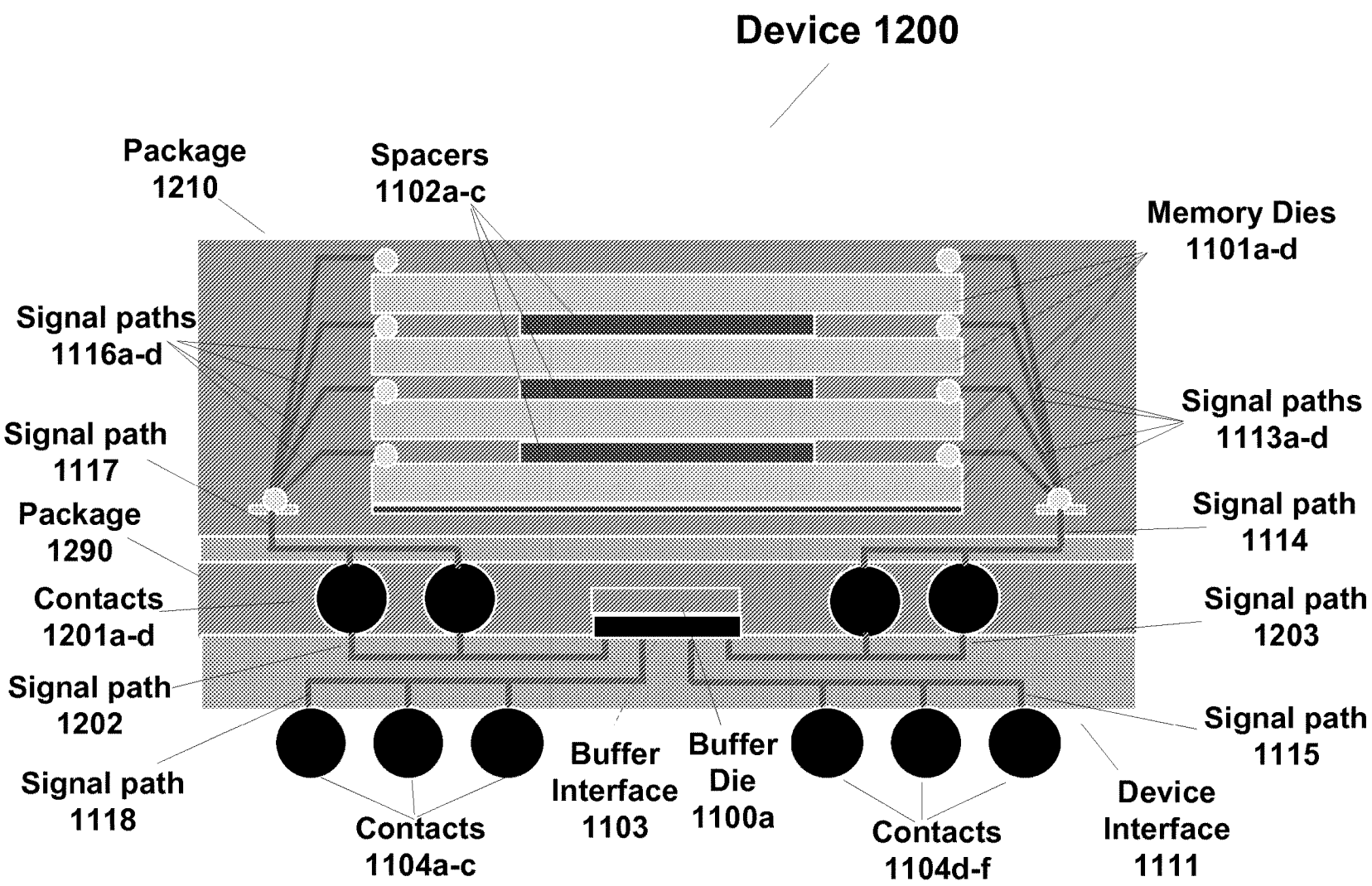
Device 1200
Package 1210
Spacers 1102a-c
Memory Dies 1101a-d
Signal paths 1116a-d
Signal paths 1113a-d
Signal path 1117
Signal path 1114
Package 1290
Contacts 1201a-d
Signal path 1203
Signal path 1202
Signal path 1115
Signal path 1118
Buffer Interface 1103
Buffer Die 1100a
Contacts 1104a-c
Contacts 1104d-f
Device Interface 1111

Fig. 12

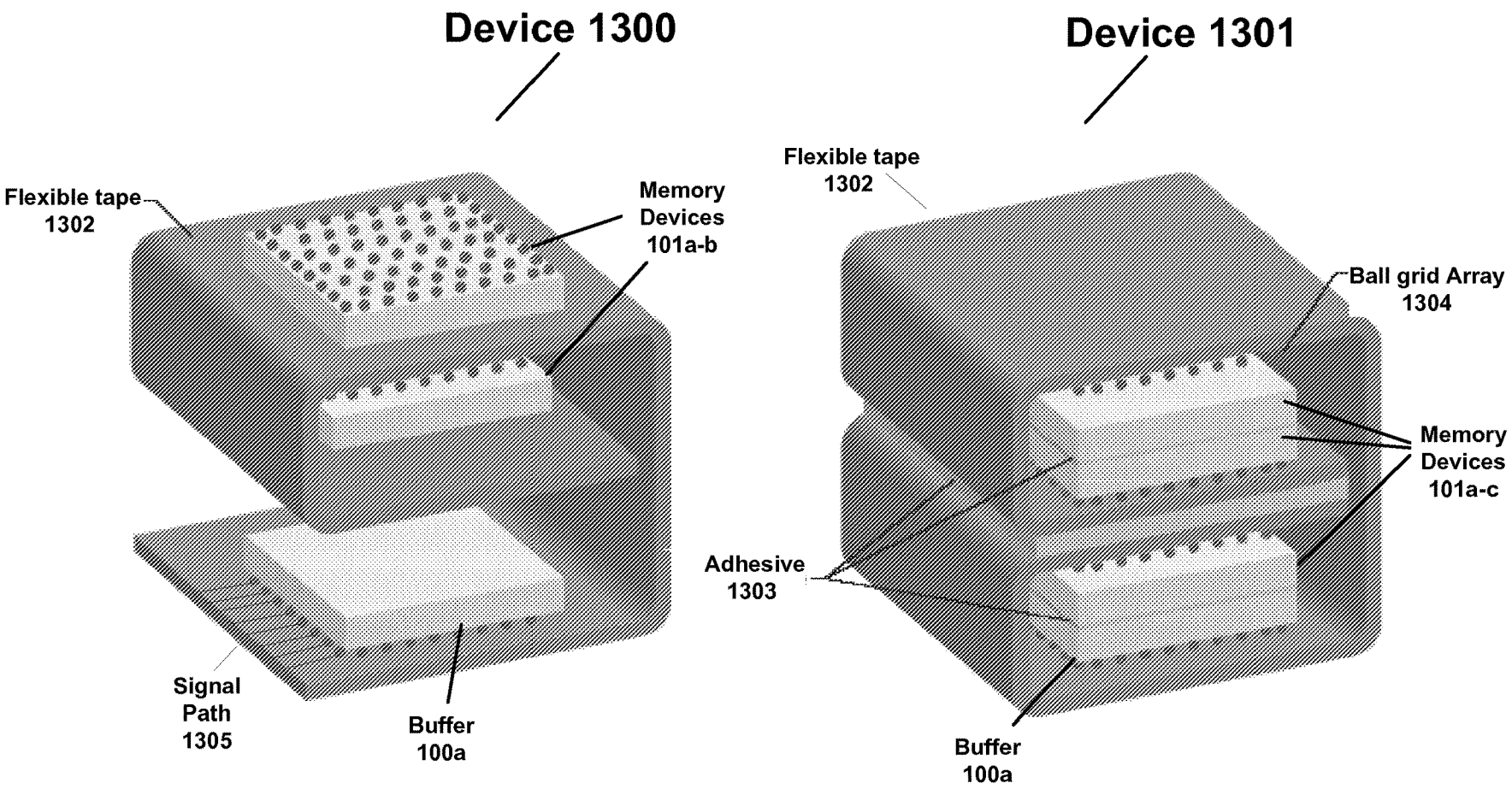
Device 1300
Flexible tape
1302
Memory
Devices
101a-b
Signal
Path
1305
Buffer
100a
Device 1301
Flexible tape
1302
Ball grid Array
1304
Memory
Devices
101a-c
Adhesive
1303
Buffer
100a

Fig. 13

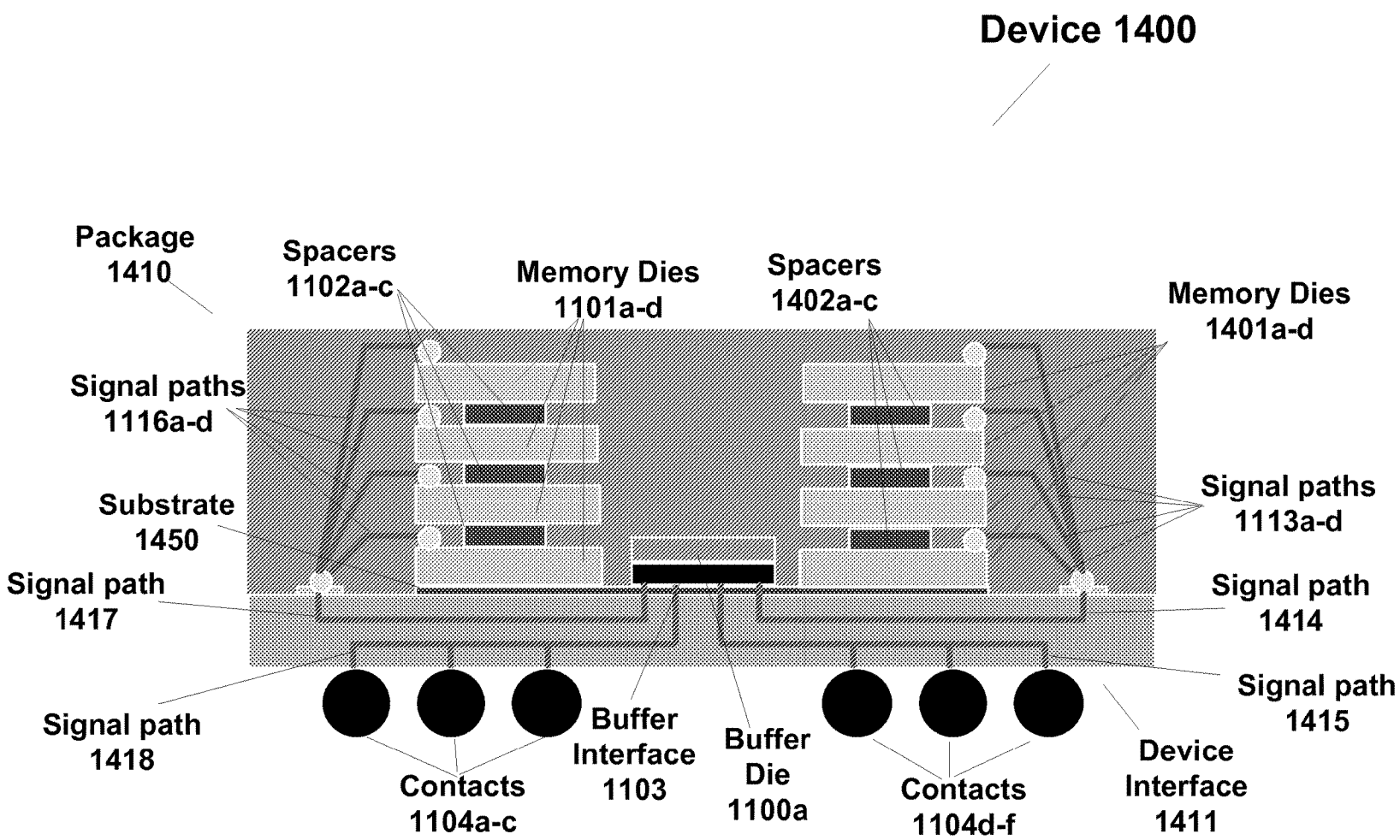
Device 1400
Package 1410
Spacers 1102a-c
Memory Dies 1101a-d
Spacers 1402a-c
Memory Dies 1401a-d
Signal paths 1116a-d
Substrate 1450
Signal path 1417
Signal path 1418
Signal paths 1113a-d
Signal path 1414
Signal path 1415
Buffer Interface 1103
Buffer Die 1100a
Contacts 1104a-c
Contacts 1104d-f
Device Interface 1411

Fig. 14

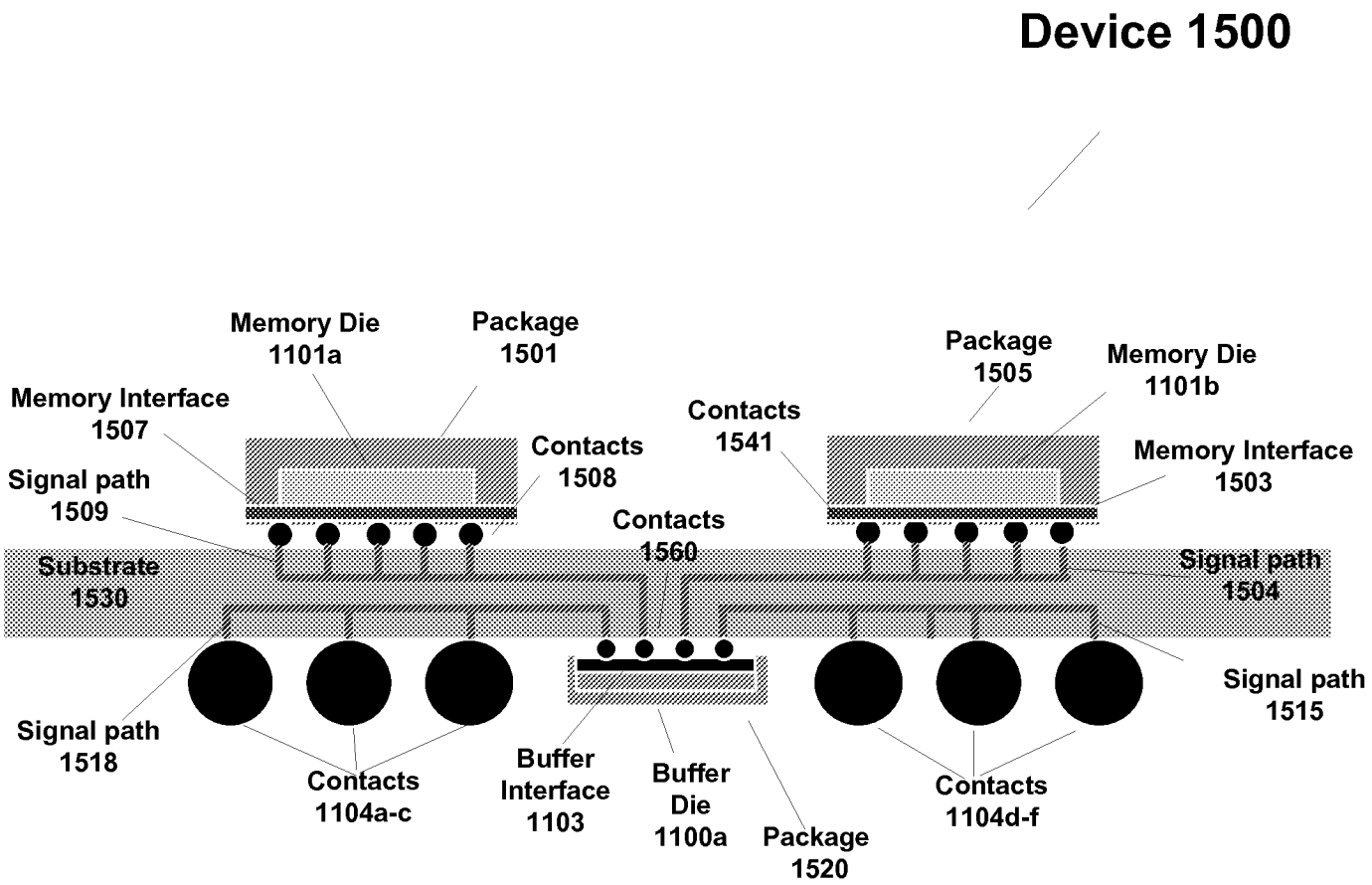
Device 1500
Memory Die
1101a
Package
1501
Memory Interface
1507
Contacts
1508
Signal path
1509
Contacts
1560
Contacts
1541
Package
1505
Memory Die
1101b
Memory Interface
1503
Substrate
1530
Signal path
1504
Signal path
1515
Signal path
1518
Contacts
1104a-c
Buffer
Interface
1103
Buffer
Die
1100a
Package
1520
Contacts
1104d-f

Fig. 15

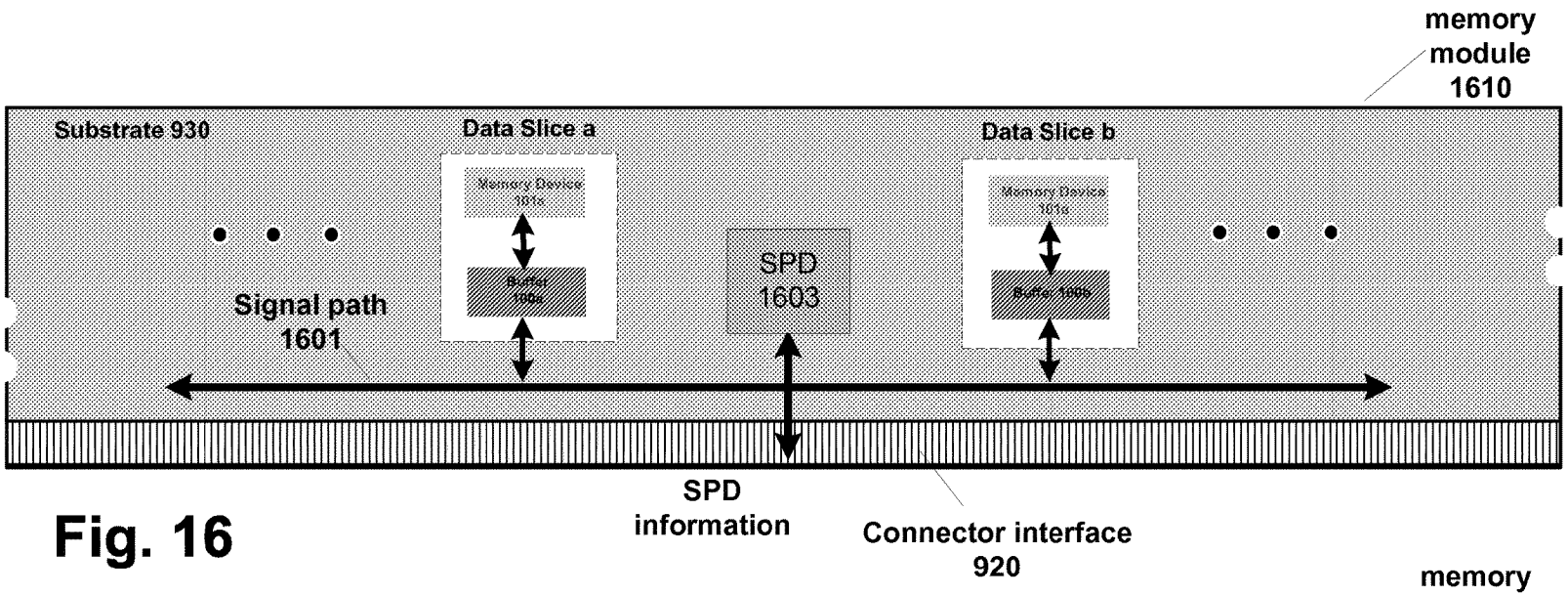
memory module 1610
Substrate 930
Data Slice a
Memory Device 101a
Buffer 100a
SPD 1603
Data Slice b
Memory Device 101a
Buffer 100b
Signal path 1601
SPD information
Connector interface 920

Fig. 16

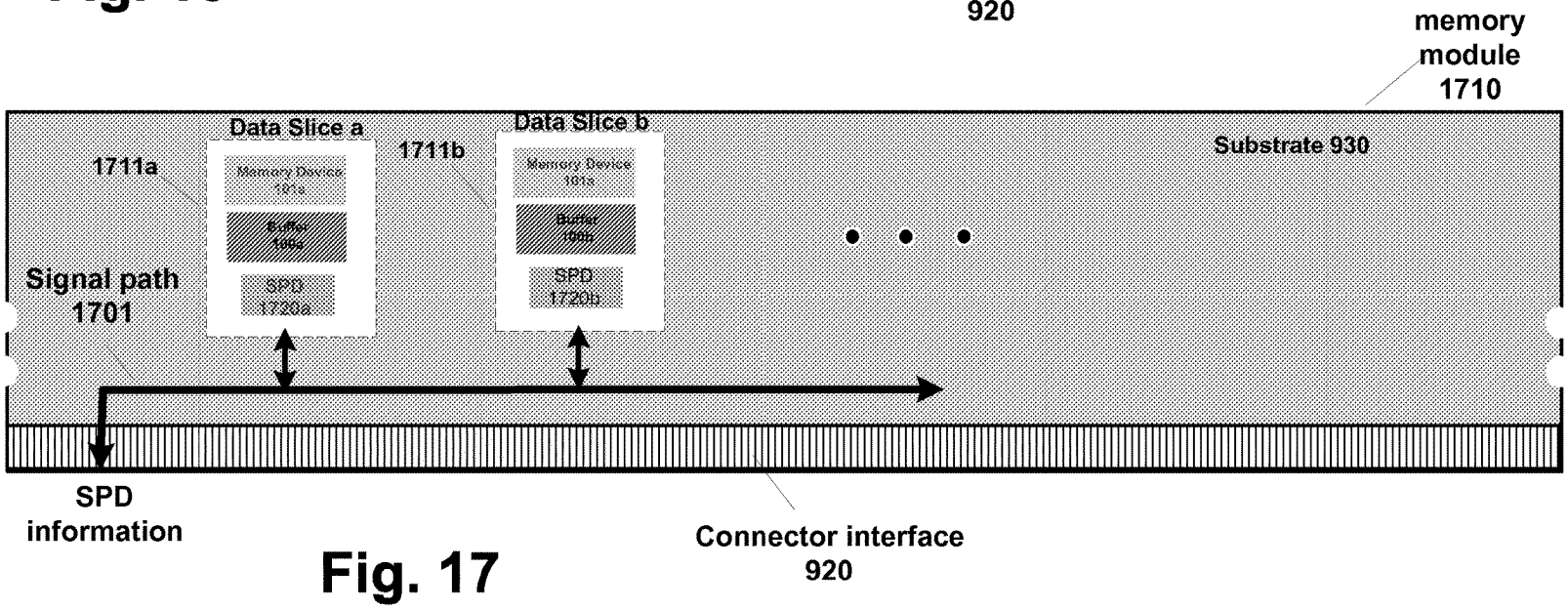
memory module 1710
Data Slice a
1711a
Memory Device 101a
Buffer 100a
SPD 1720a
1711b
Data Slice b
Memory Device 101b
Buffer 100b
SPD 1720b
Substrate 930
Signal path 1701
SPD information
Connector interface 920

Fig. 17

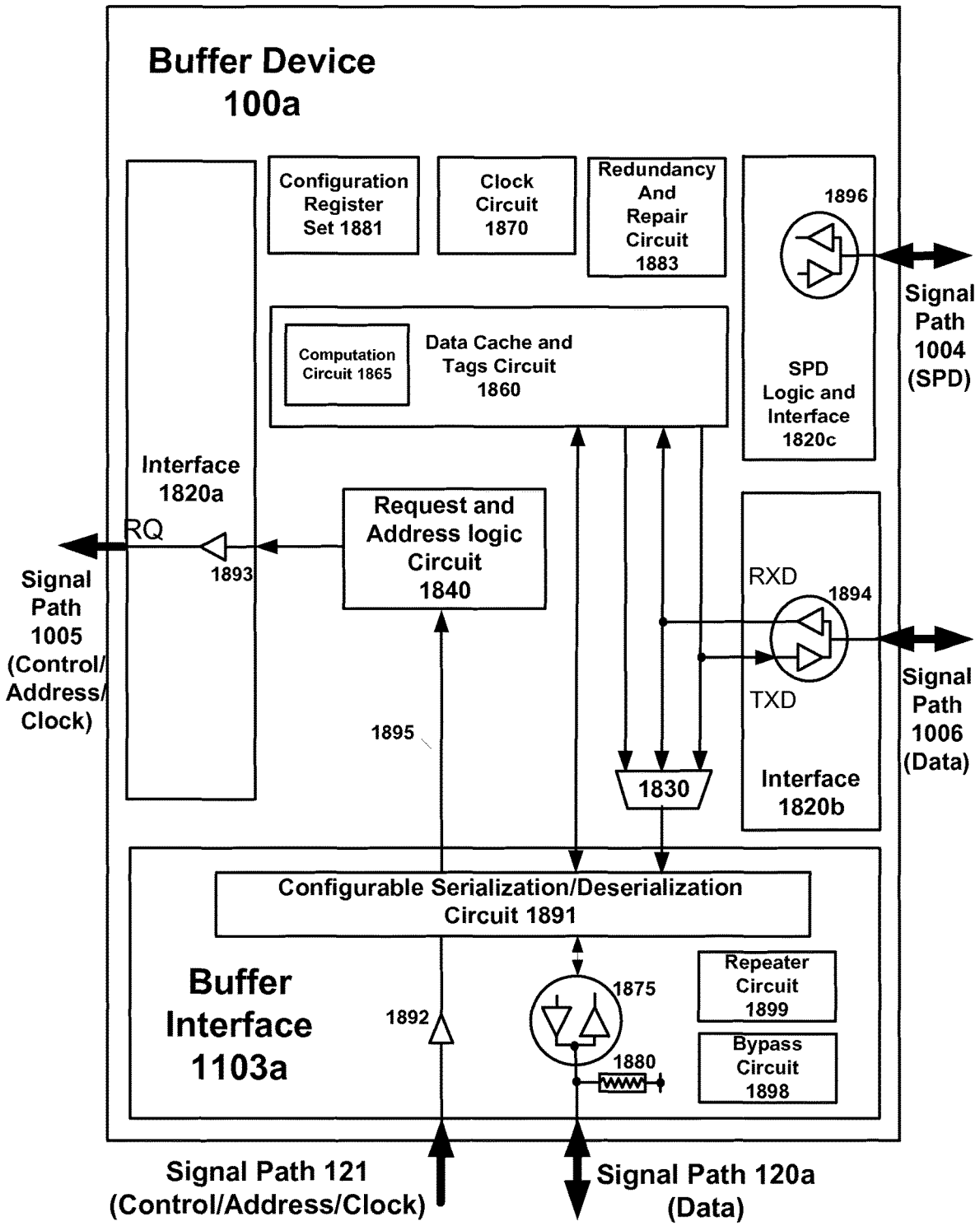
Buffer Device
100a
Configuration Register Set 1881
Clock Circuit 1870
Redundancy And Repair Circuit 1883
1896
Signal Path 1004 (SPD)
Computation Circuit 1865
Data Cache and Tags Circuit 1860
SPD Logic and Interface 1820c
Interface 1820a
RQ
1893
Request and Address logic Circuit 1840
Signal Path 1005 (Control/ Address/ Clock)
RXD
1894
TXD
Signal Path 1006 (Data)
1895
1830
Interface 1820b
Configurable Serialization/Deserialization Circuit 1891
Buffer Interface 1103a
1892
1875
1880
Repeater Circuit 1899
Bypass Circuit 1898
Signal Path 121 (Control/Address/Clock)
Signal Path 120a (Data)

Fig. 18

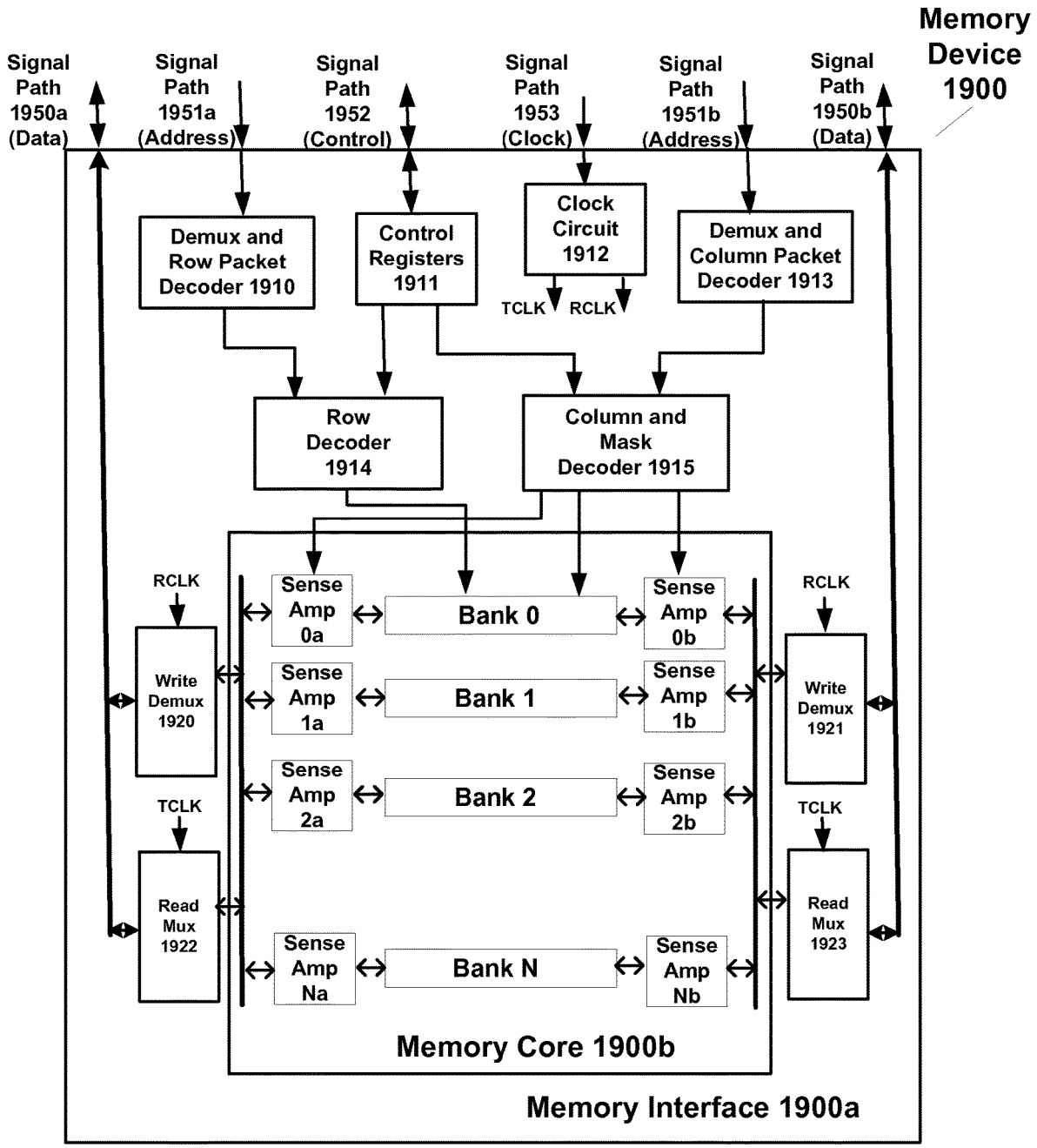
Memory Device 1900
Signal Path 1950a (Data)
Signal Path 1951a (Address)
Signal Path 1952 (Control)
Signal Path 1953 (Clock)
Signal Path 1951b (Address)
Signal Path 1950b (Data)
Demux and Row Packet Decoder 1910
Control Registers 1911
Clock Circuit 1912
TCLK
RCLK
Demux and Column Packet Decoder 1913
Row Decoder 1914
Column and Mask Decoder 1915
RCLK
Write Demux 1920
TCLK
Read Mux 1922
Sense Amp 0a
Bank 0
Sense Amp 0b
Sense Amp 1a
Bank 1
Sense Amp 1b
Sense Amp 2a
Bank 2
Sense Amp 2b
Sense Amp Na
Bank N
Sense Amp Nb
RCLK
Write Demux 1921
TCLK
Read Mux 1923
Memory Core 1900b
Memory Interface 1900a

Fig. 19

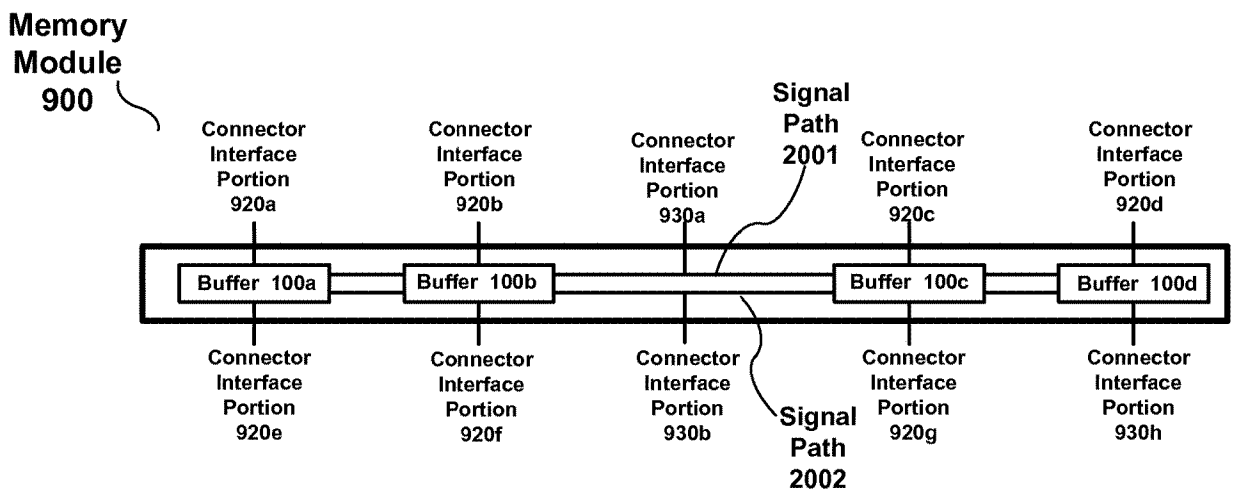

Fig. 20A

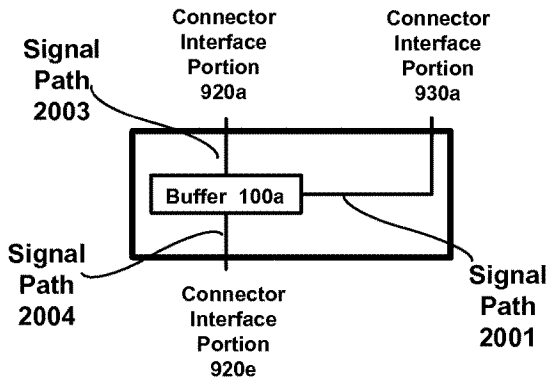

Fig. 20B

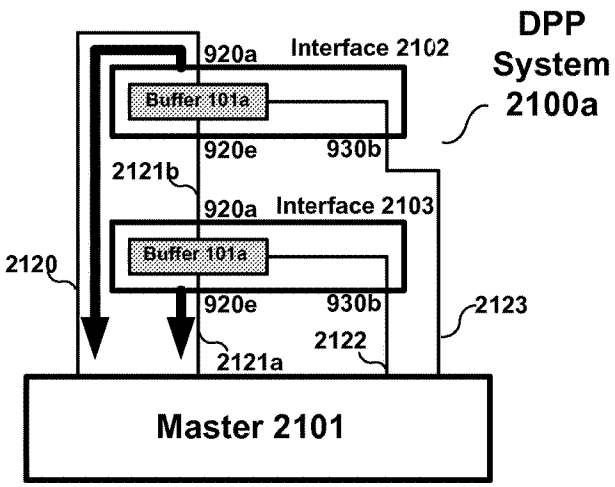

Fig. 21A

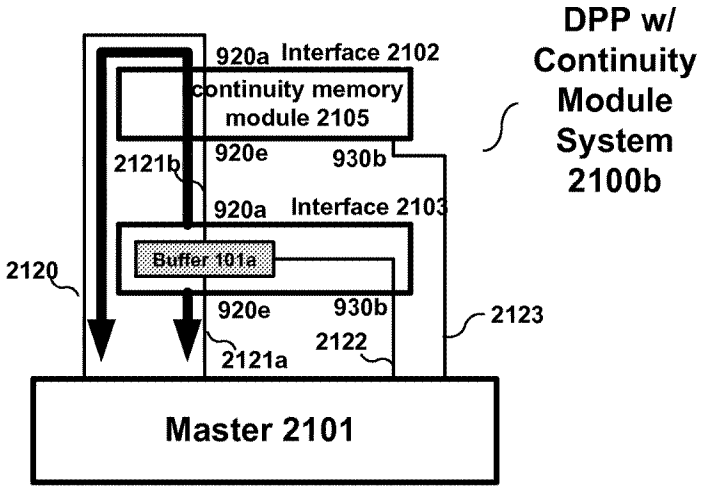

Fig. 21B

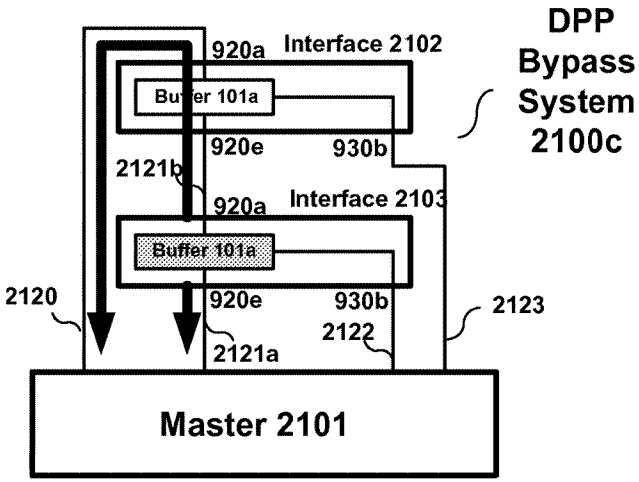

Fig. 21C

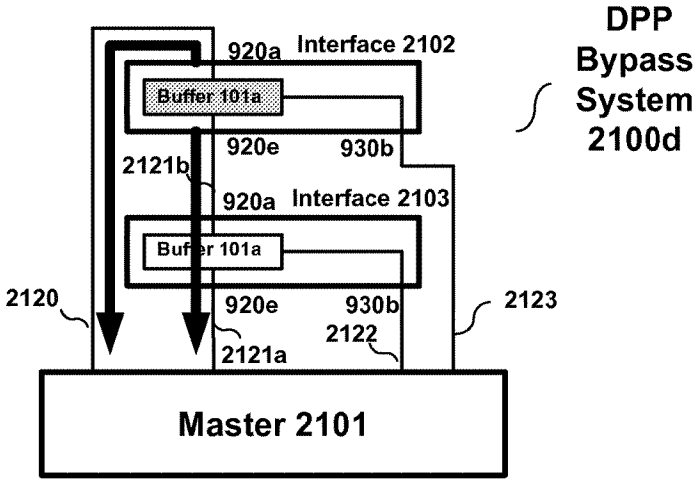

Fig. 21D

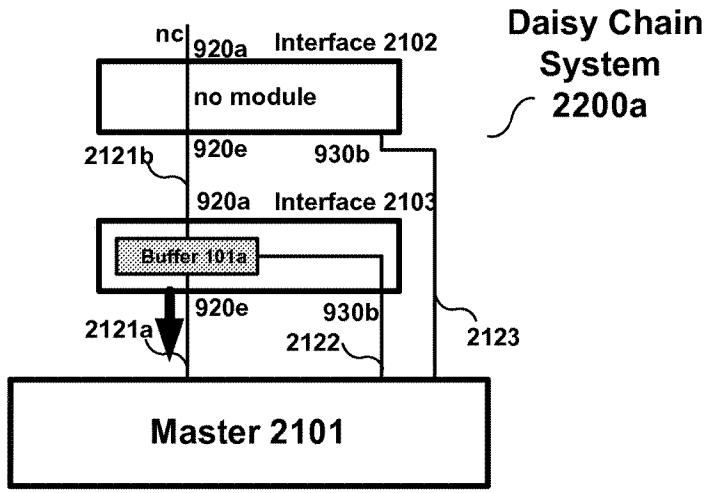

Fig. 22A

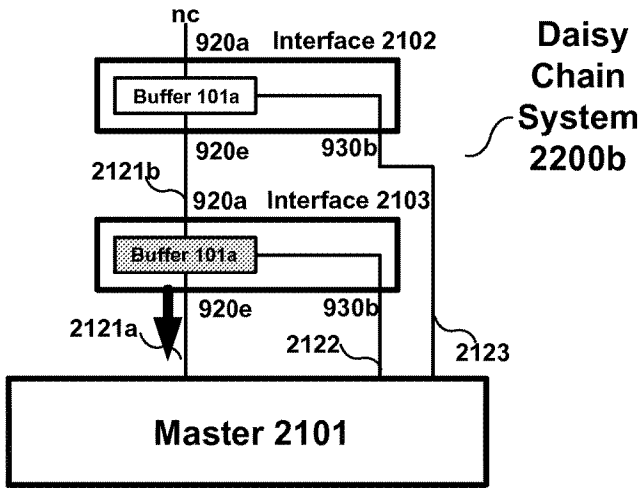

Fig. 22B

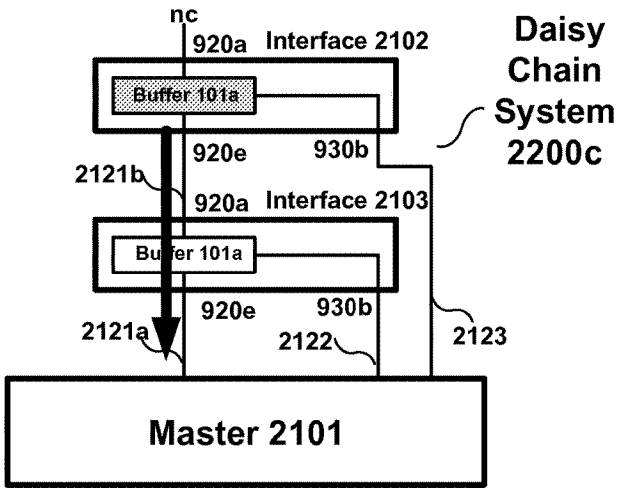

Fig. 22C

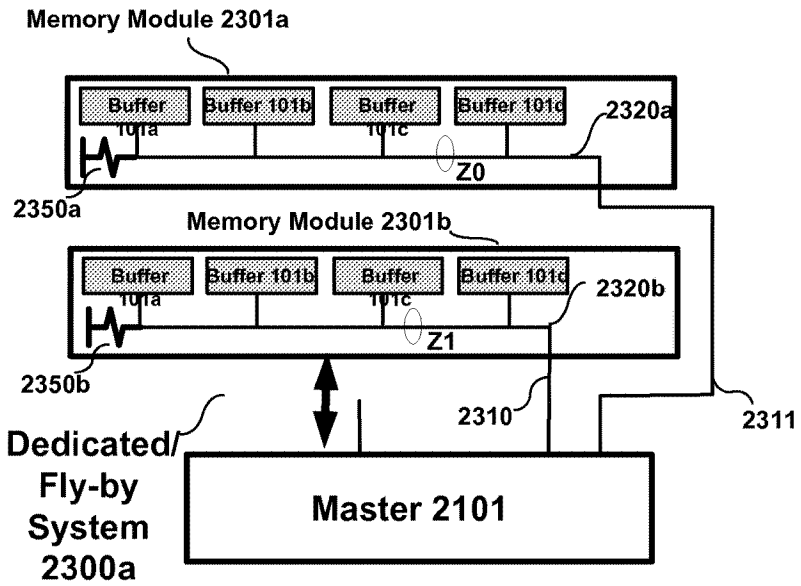

Fig. 23A

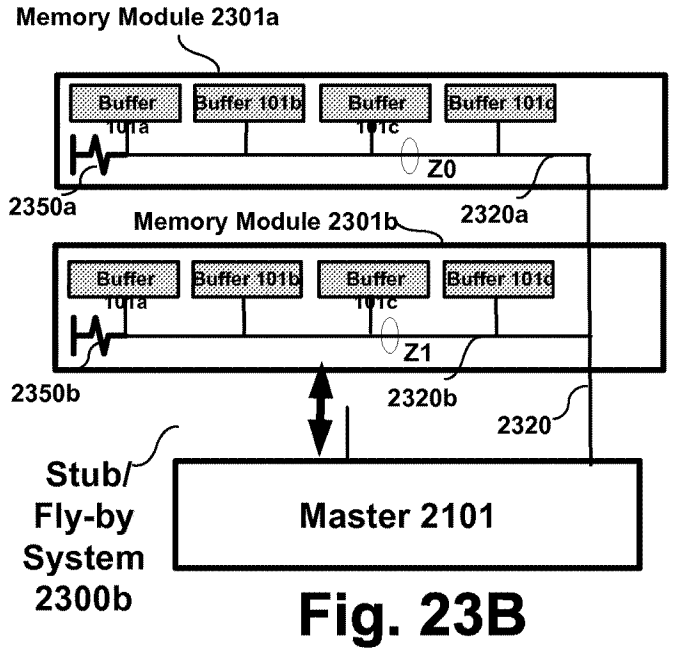

Fig. 23B

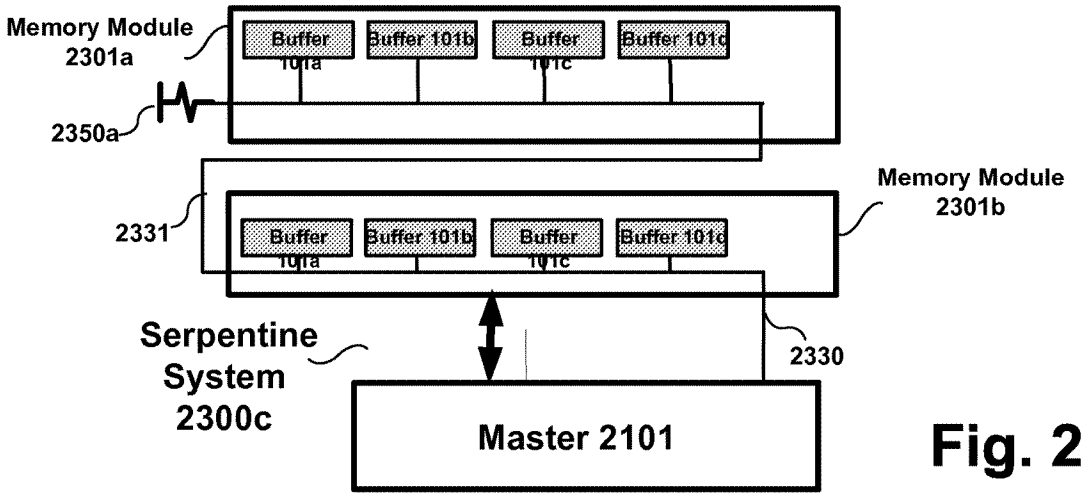

Fig. 23C

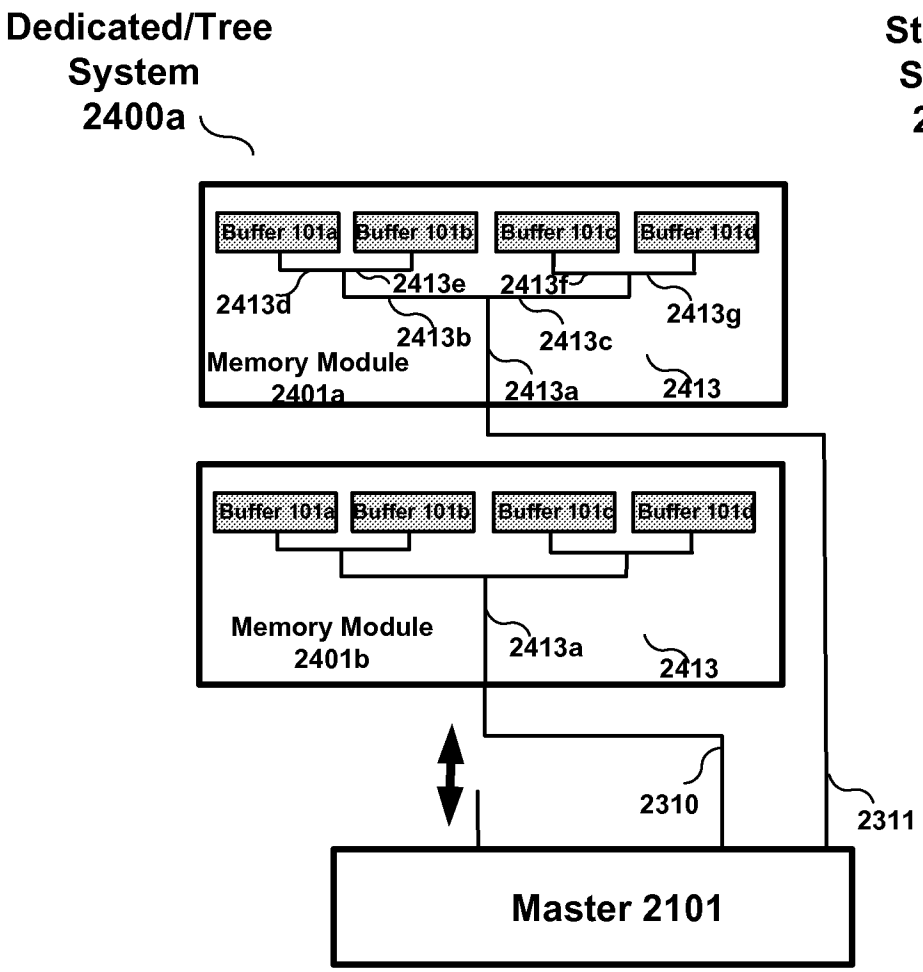

Fig. 24A

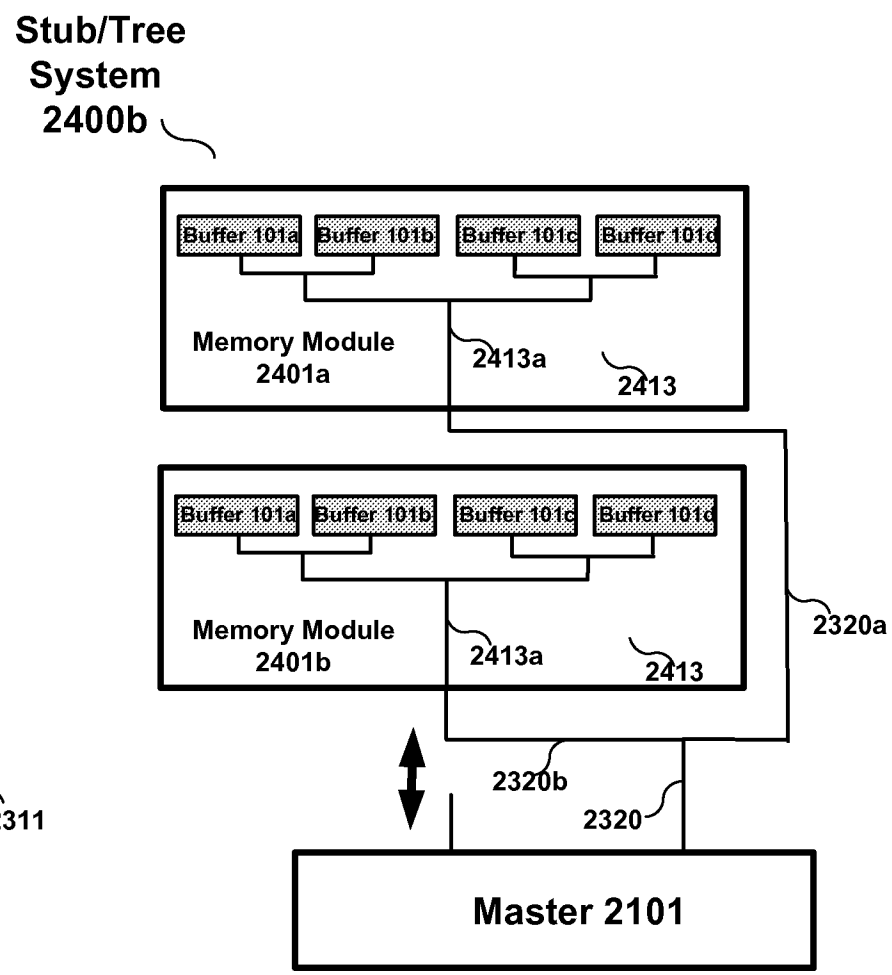

Fig. 24B

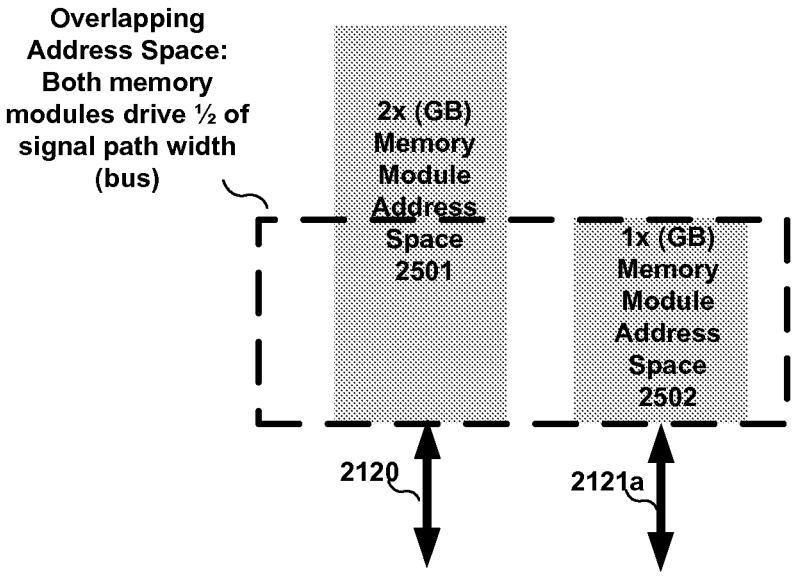

Fig. 25A

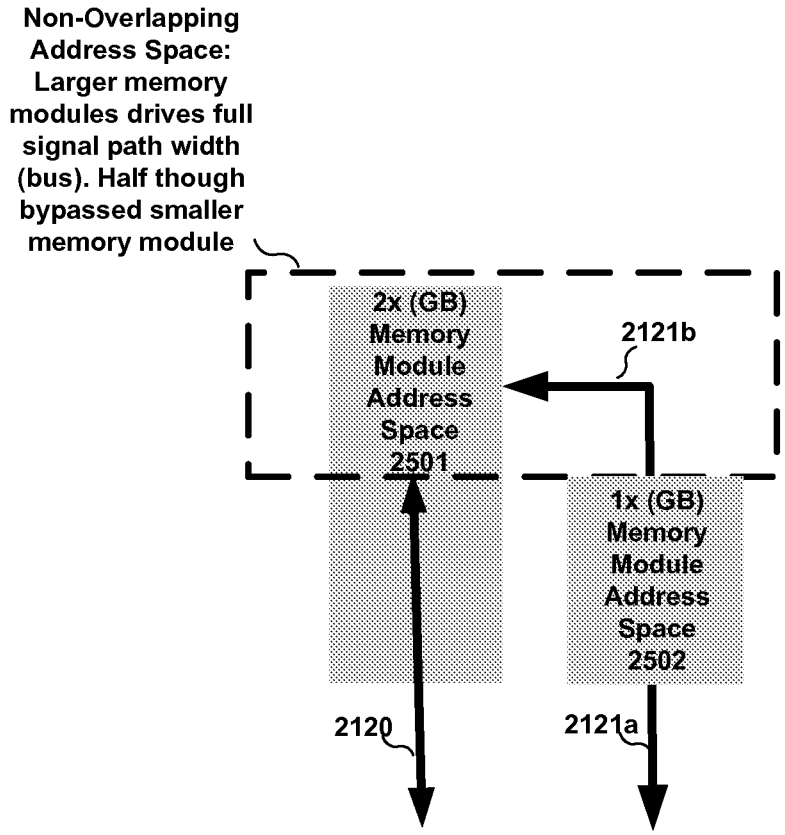

Fig. 25B

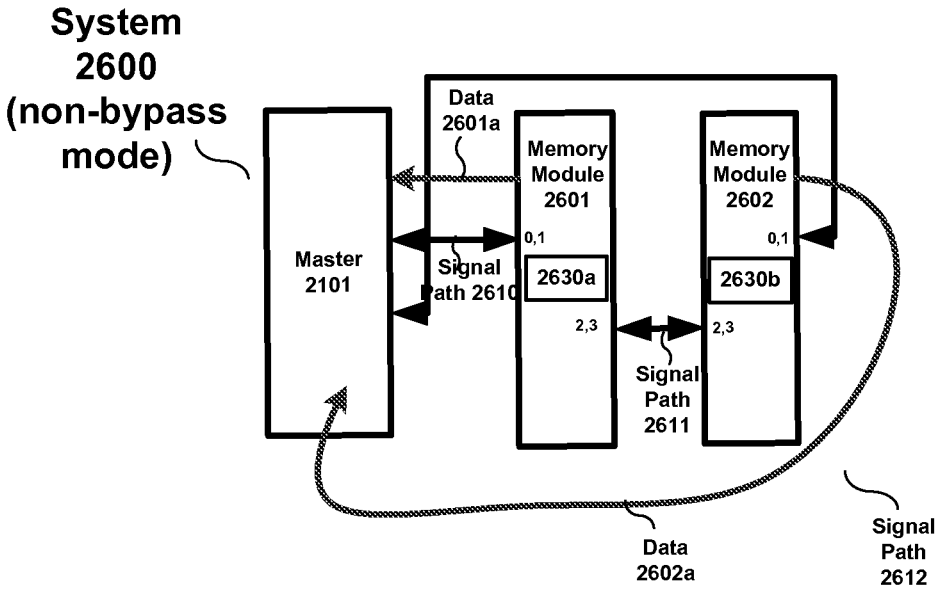

Fig. 26A

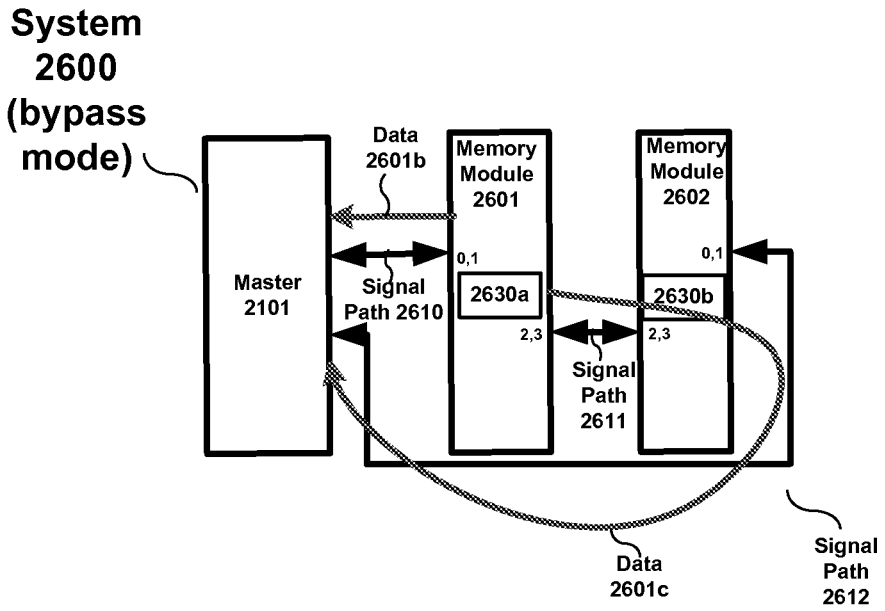

Fig. 26B

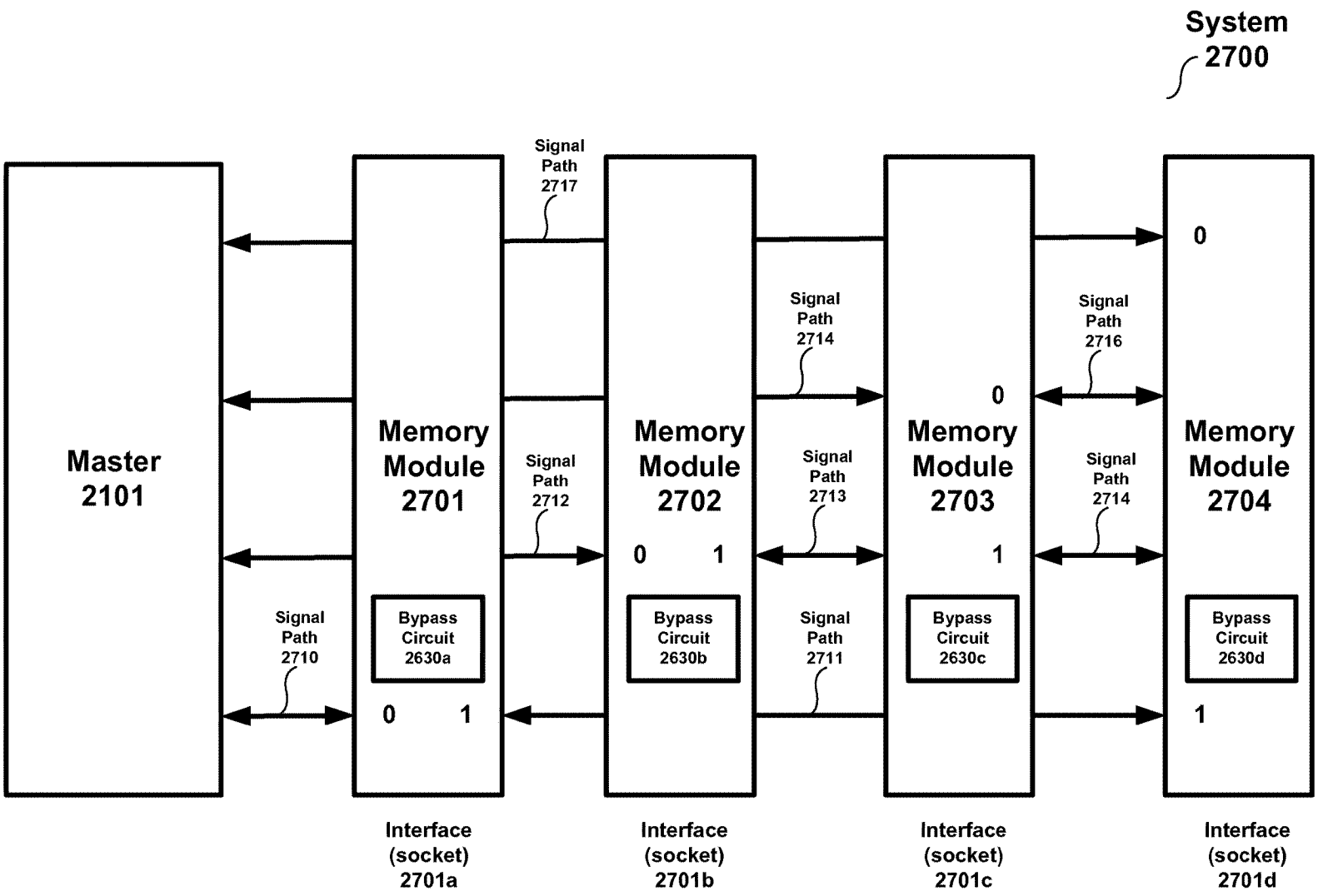
System
2700
Master
2101
Memory
Module
2701
Memory
Module
2702
Memory
Module
2703
Memory
Module
2704
Signal
Path
2710
Signal
Path
2712
Signal
Path
2713
Signal
Path
2714
Signal
Path
2716
Signal
Path
2717
Signal
Path
2711
Bypass
Circuit
2630a
Bypass
Circuit
2630b
Bypass
Circuit
2630c
Bypass
Circuit
2630d
0
1
Interface
(socket)
2701a
Interface
(socket)
2701b
Interface
(socket)
2701c
Interface
(socket)
2701d

Fig. 27

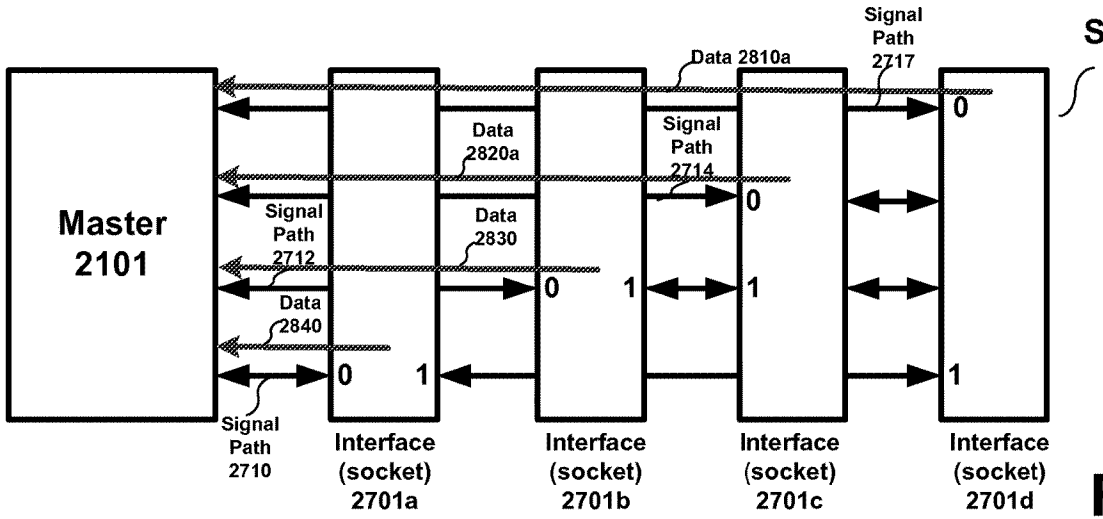

System (non-bypass mode)
2700

Configurations			
2701a	2701b	2701c	2701d
Small	Small	Small	Small
Large	Large	Large	Large
Small	Small	Large	Large
Large	Small	Large	Small
Small	Large	Small	Large
Large	Large	Small	Small

Table
2810

Fig. 28A

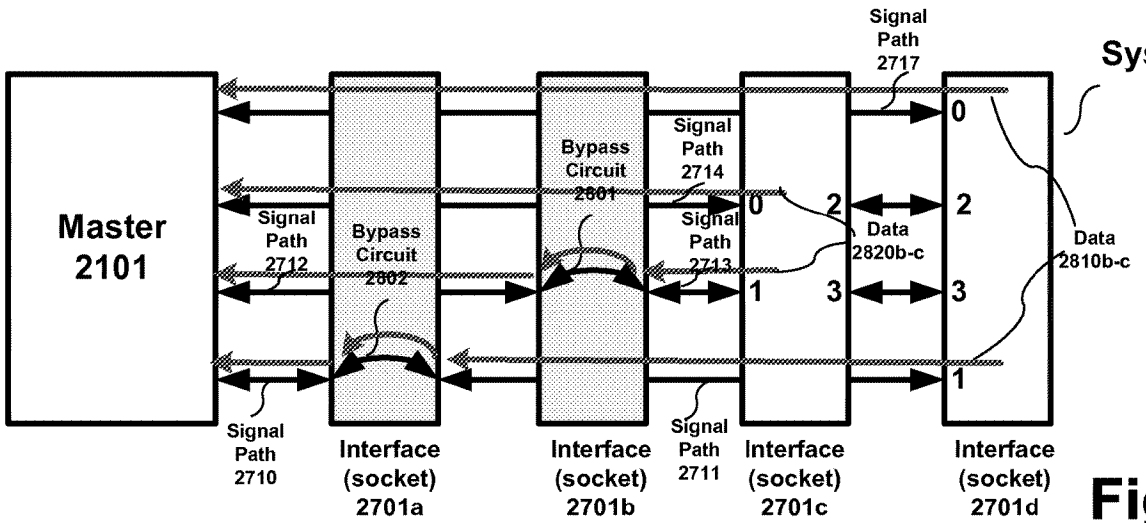

System (bypass mode)
2700

Configurations			
2701a	2701b	2701c	2701d
Bypass	Bypass	Small	Small
Bypass	Bypass	Large	Large
Bypass	Bypass	Small	Large
Bypass	Bypass	Large	Small

Table
2820

Fig. 28B

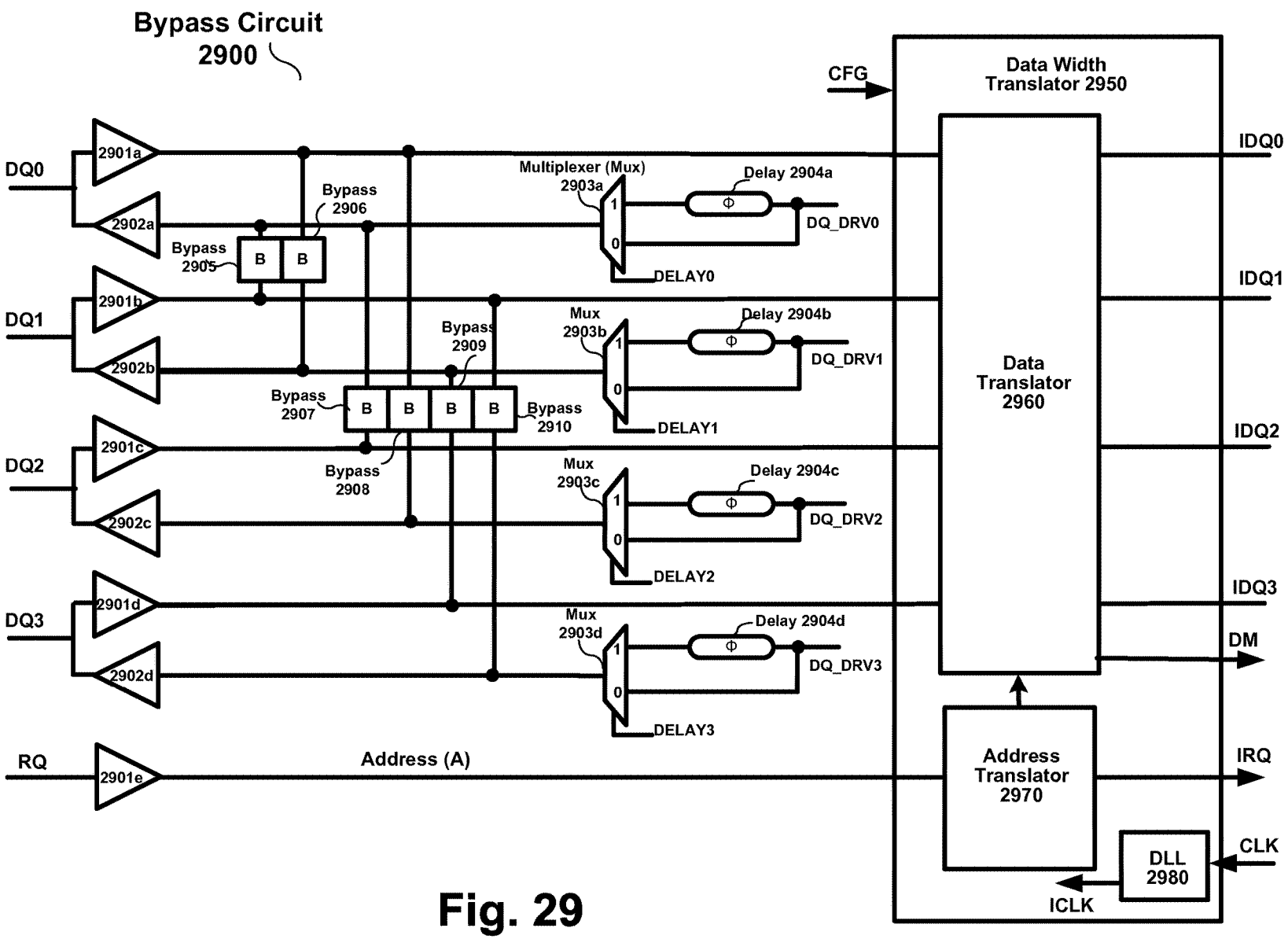
Bypass Circuit
2900
CFG
Data Width
Translator 2950
DQ0
2901a
2902a
Bypass
2906
Bypass
2905
B
B
Multiplexer (Mux)
2903a
Delay 2904a
Φ
DQ_DRV0
DELAY0
IDQ0
DQ1
2901b
2902b
Bypass
2909
Mux
2903b
Delay 2904b
DQ_DRV1
DELAY1
IDQ1
Bypass
2907
Bypass
2910
Data
Translator
2960
DQ2
2901c
2902c
Bypass
2908
Mux
2903c
Delay 2904c
DQ_DRV2
DELAY2
IDQ2
DQ3
2901d
2902d
Mux
2903d
Delay 2904d
DQ_DRV3
DELAY3
IDQ3
DM
RQ
2901e
Address (A)
Address
Translator
2970
IRQ
DLL
2980
CLK
ICLK

Fig. 29

Timing Chart
3000

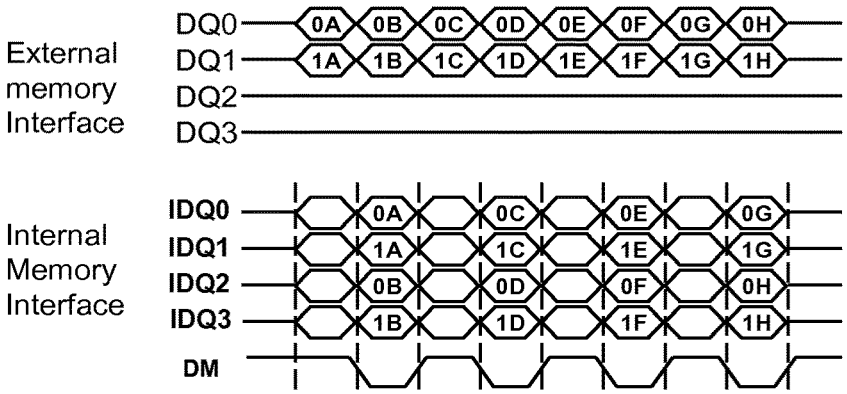

Fig. 30A

Timing Chart
3001

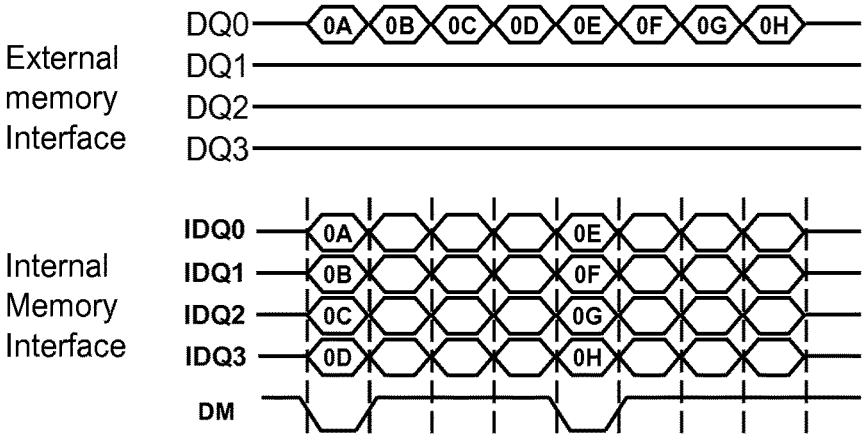

Fig. 30B

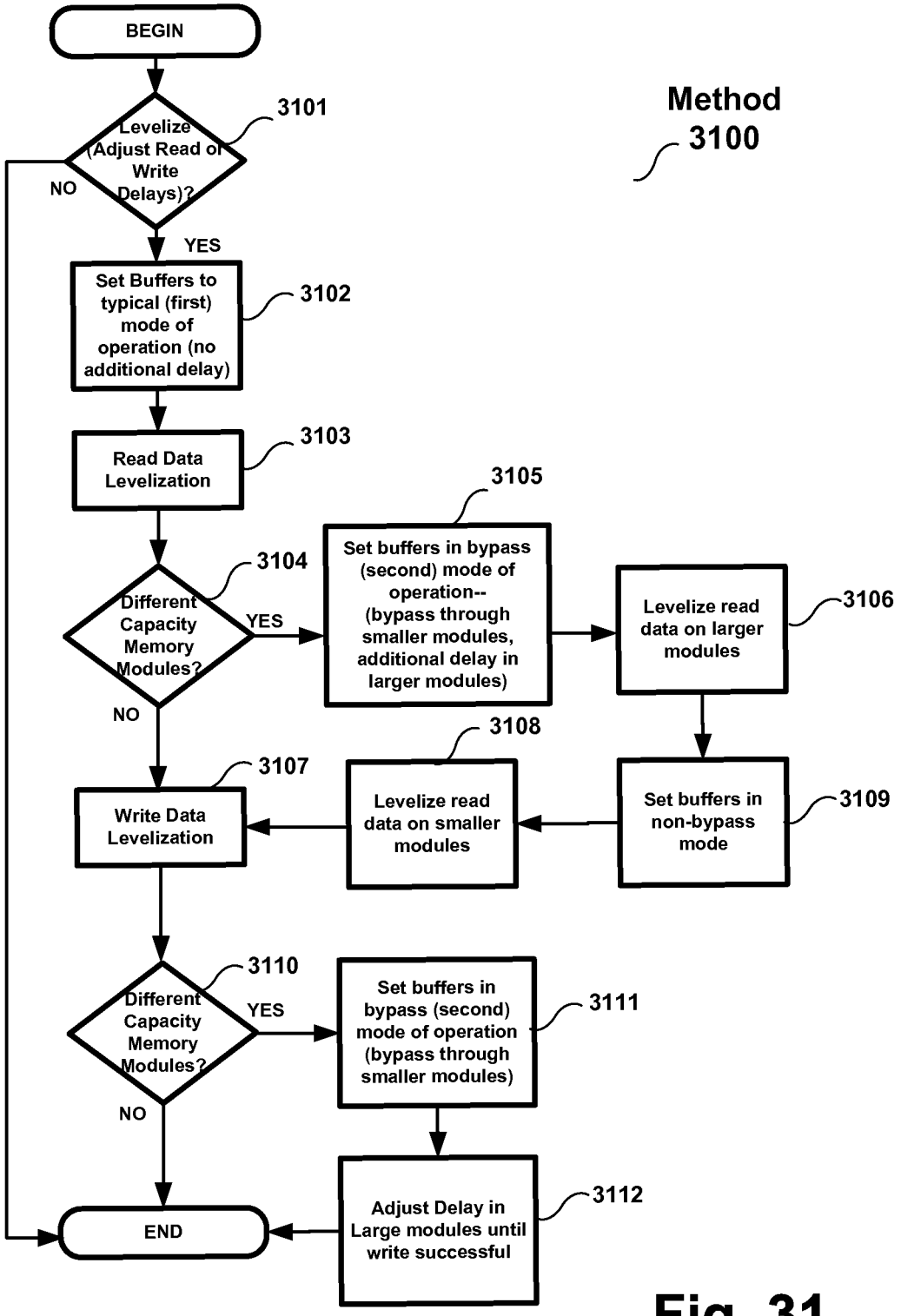
BEGIN
Levelize (Adjust Read or Write Delays)?
3101
NO
YES
Set Buffers to typical (first) mode of operation (no additional delay)
3102
Read Data Levelization
3103
Different Capacity Memory Modules?
3104
YES
NO
Set buffers in bypass (second) mode of operation-- (bypass through smaller modules, additional delay in larger modules)
3105
Levelize read data on larger modules
3106
Set buffers in non-bypass mode
3109
Levelize read data on smaller modules
3108
Write Data Levelization
3107
Different Capacity Memory Modules?
3110
YES
NO
Set buffers in bypass (second) mode of operation (bypass through smaller modules)
3111
Adjust Delay in Large modules until write successful
3112
END
Method
3100

Fig. 31

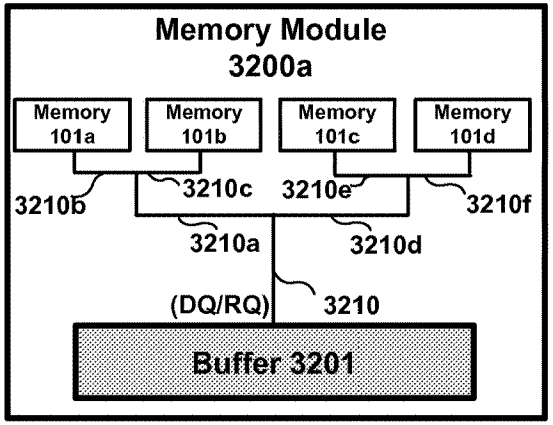

Fig. 32A

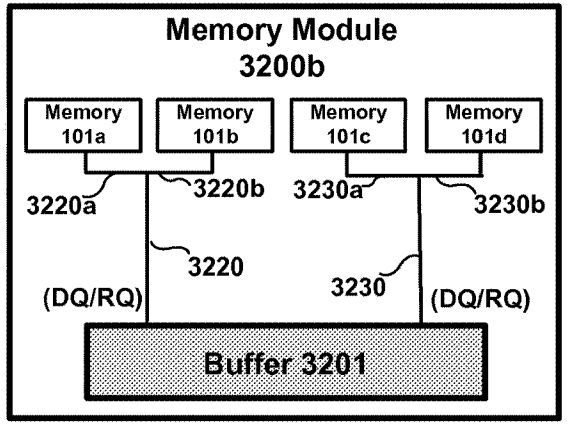

Fig. 32B

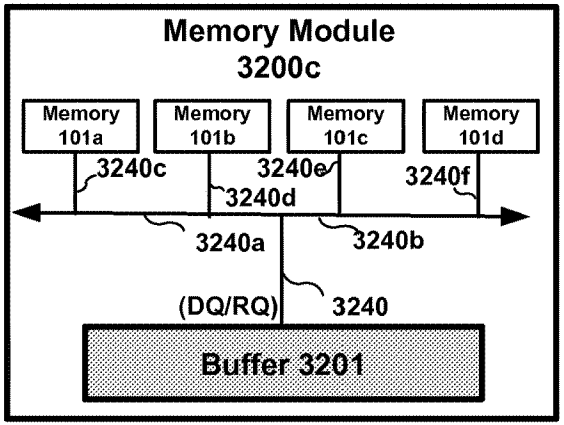

Fig. 32C

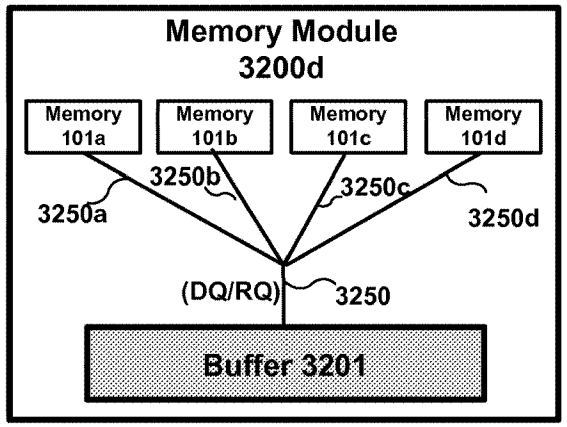

Fig. 32D

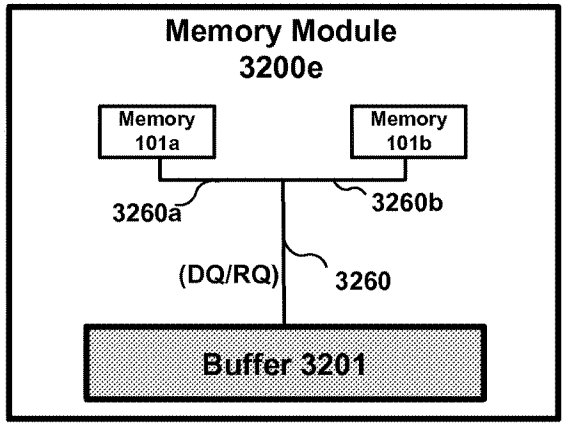

Fig. 32E

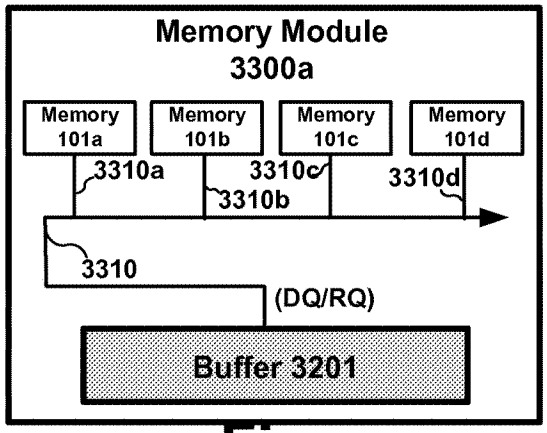

Fig. 33A

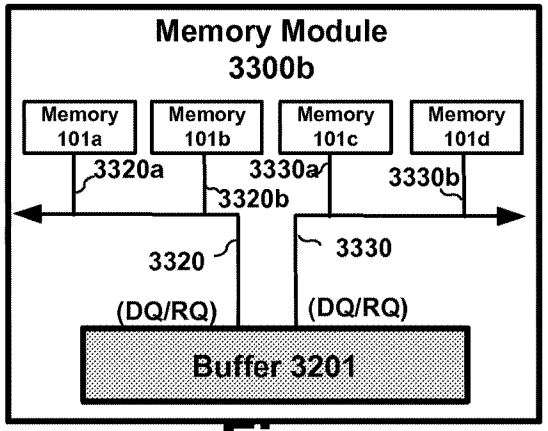

Fig. 33B

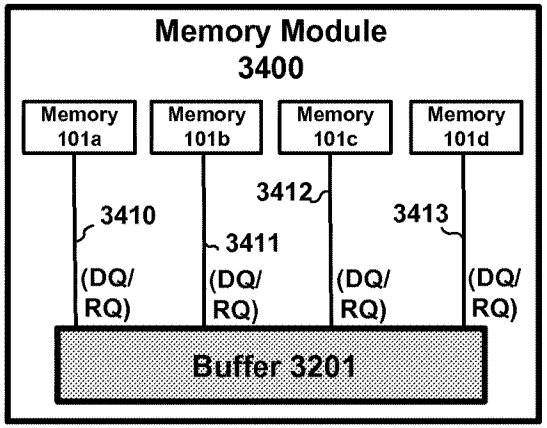

Fig. 34

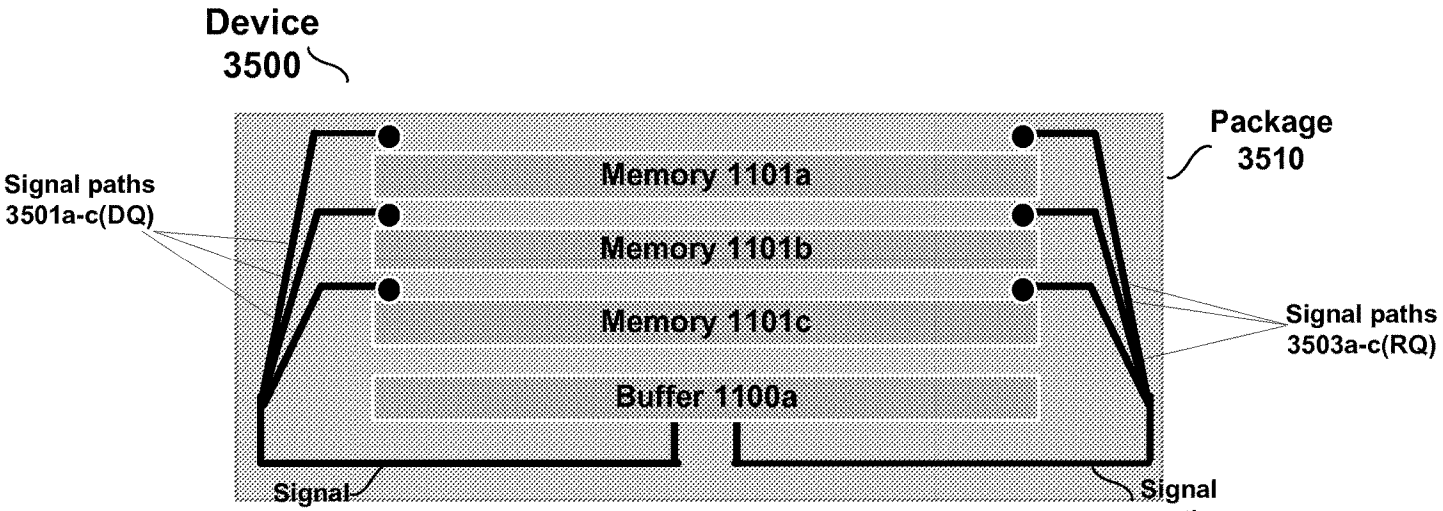

Fig. 35

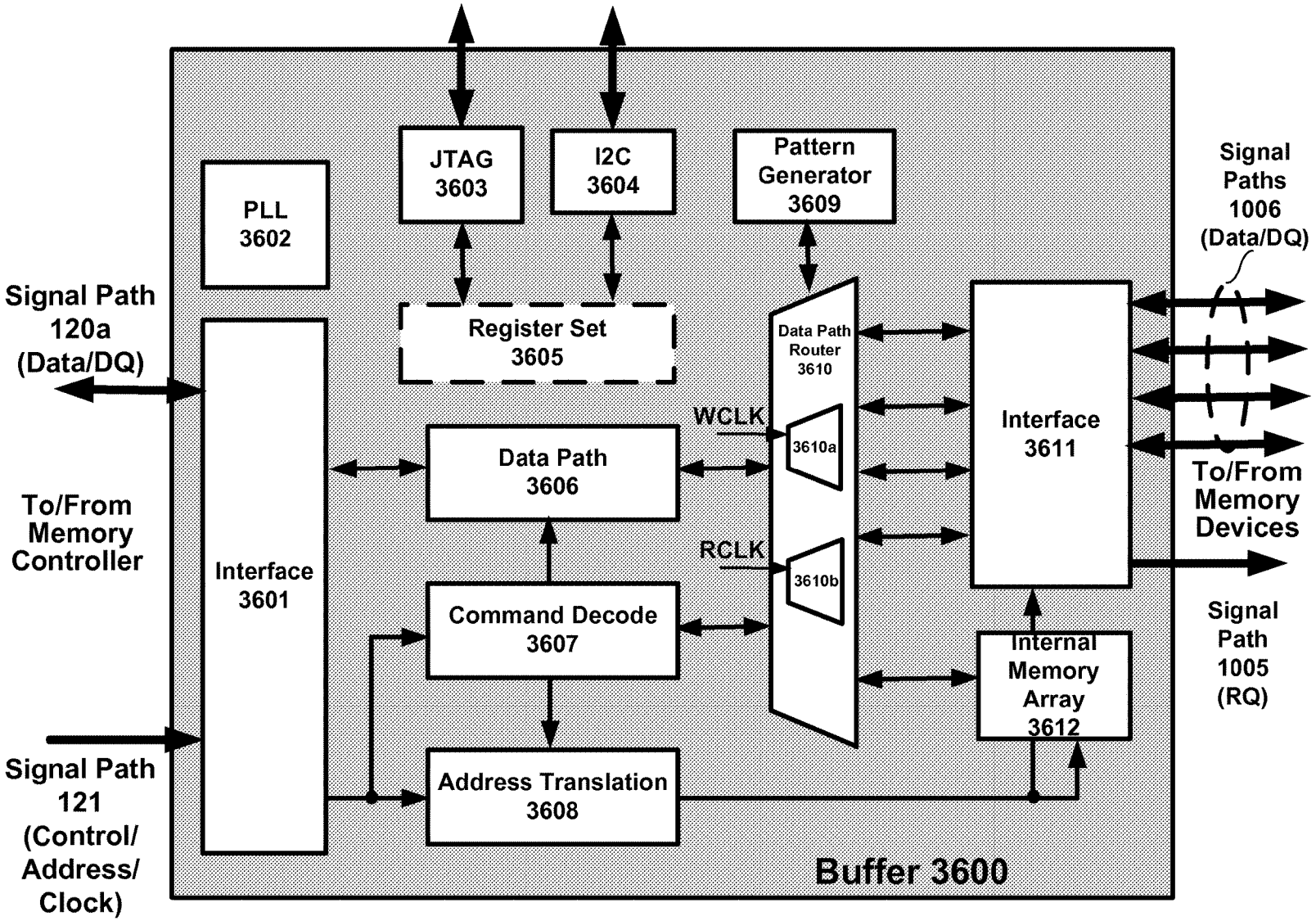
JTAG
3603
I2C
3604
Pattern
Generator
3609
PLL
3602
Signal Paths
1006
(Data/DQ)
Signal Path
120a
(Data/DQ)
Register Set
3605
Data Path
Router
3610
WCLK
3610a
Interface
3611
Data Path
3606
To/From
Memory
Devices
To/From
Memory
Controller
RCLK
3610b
Interface
3601
Command Decode
3607
Signal
Path
1005
(RQ)
Internal
Memory
Array
3612
Signal Path
121
(Control/
Address/
Clock)
Address Translation
3608
Buffer 3600

Fig. 36

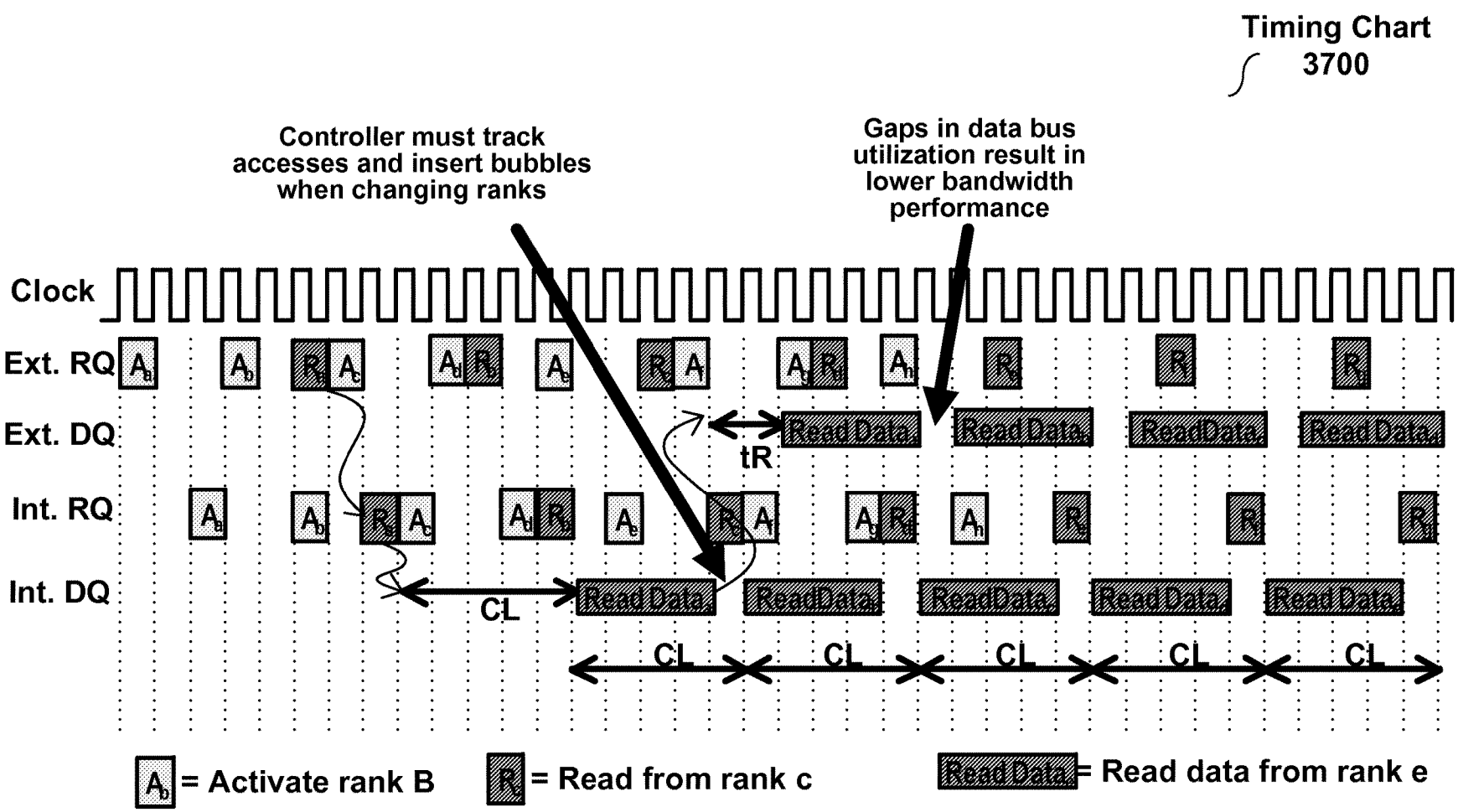
Timing Chart
3700
Controller must track accesses and insert bubbles when changing ranks
Gaps in data bus utilization result in lower bandwidth performance
Clock
Ext. RQ
Ext. DQ
Int. RQ
Int. DQ
tR
CL
Read Data
= Activate rank B
= Read from rank c
= Read data from rank e

Fig. 37A

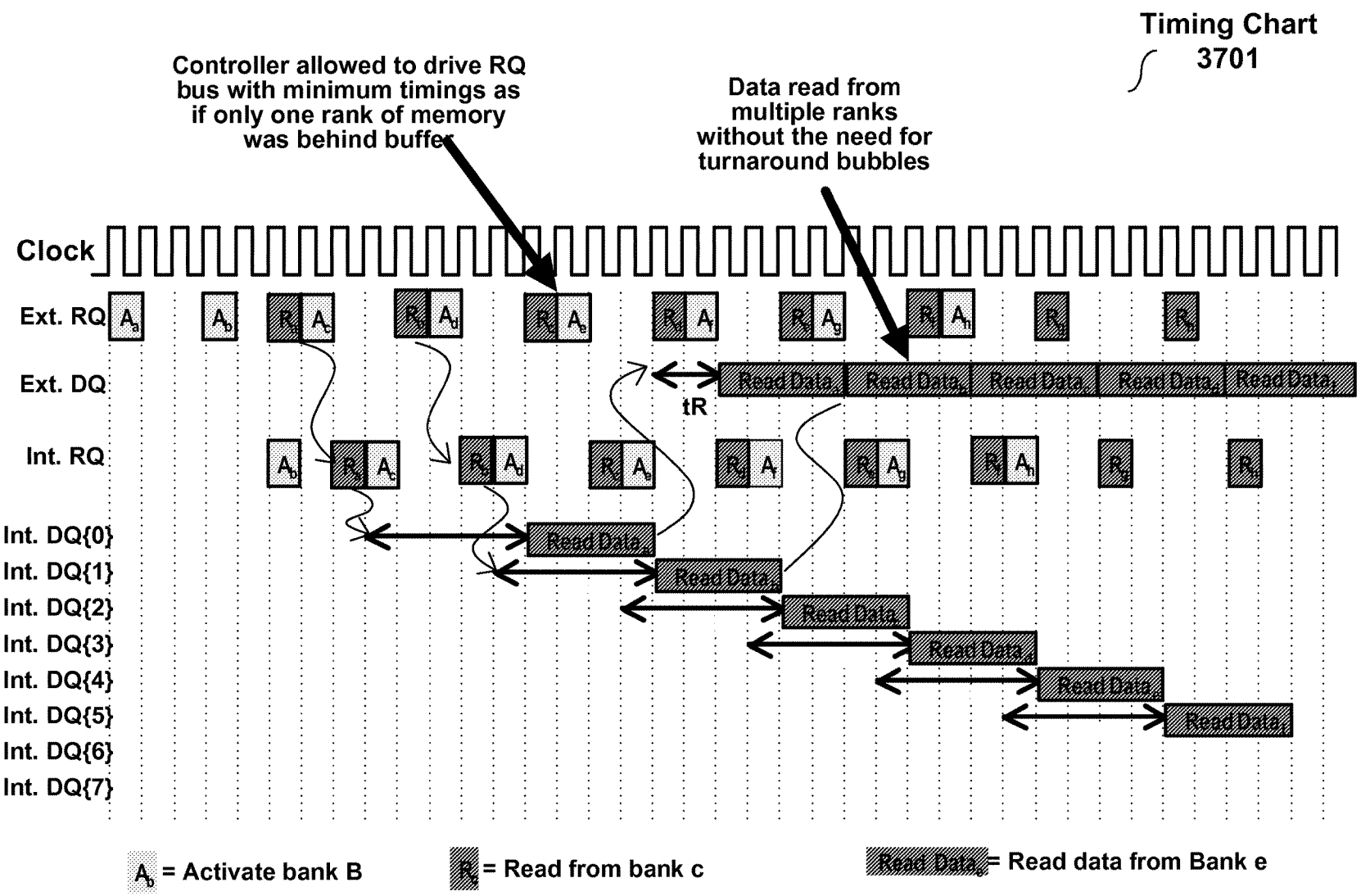
Timing Chart
3701
Controller allowed to drive RQ bus with minimum timings as if only one rank of memory was behind buffer
Data read from multiple ranks without the need for turnaround bubbles
Clock
Ext. RQ
Ext. DQ
Int. RQ
Int. DQ{0}
Int. DQ{1}
Int. DQ{2}
Int. DQ{3}
Int. DQ{4}
Int. DQ{5}
Int. DQ{6}
Int. DQ{7}
tR
= Activate bank B
= Read from bank c
= Read data from Bank e

Fig. 37B

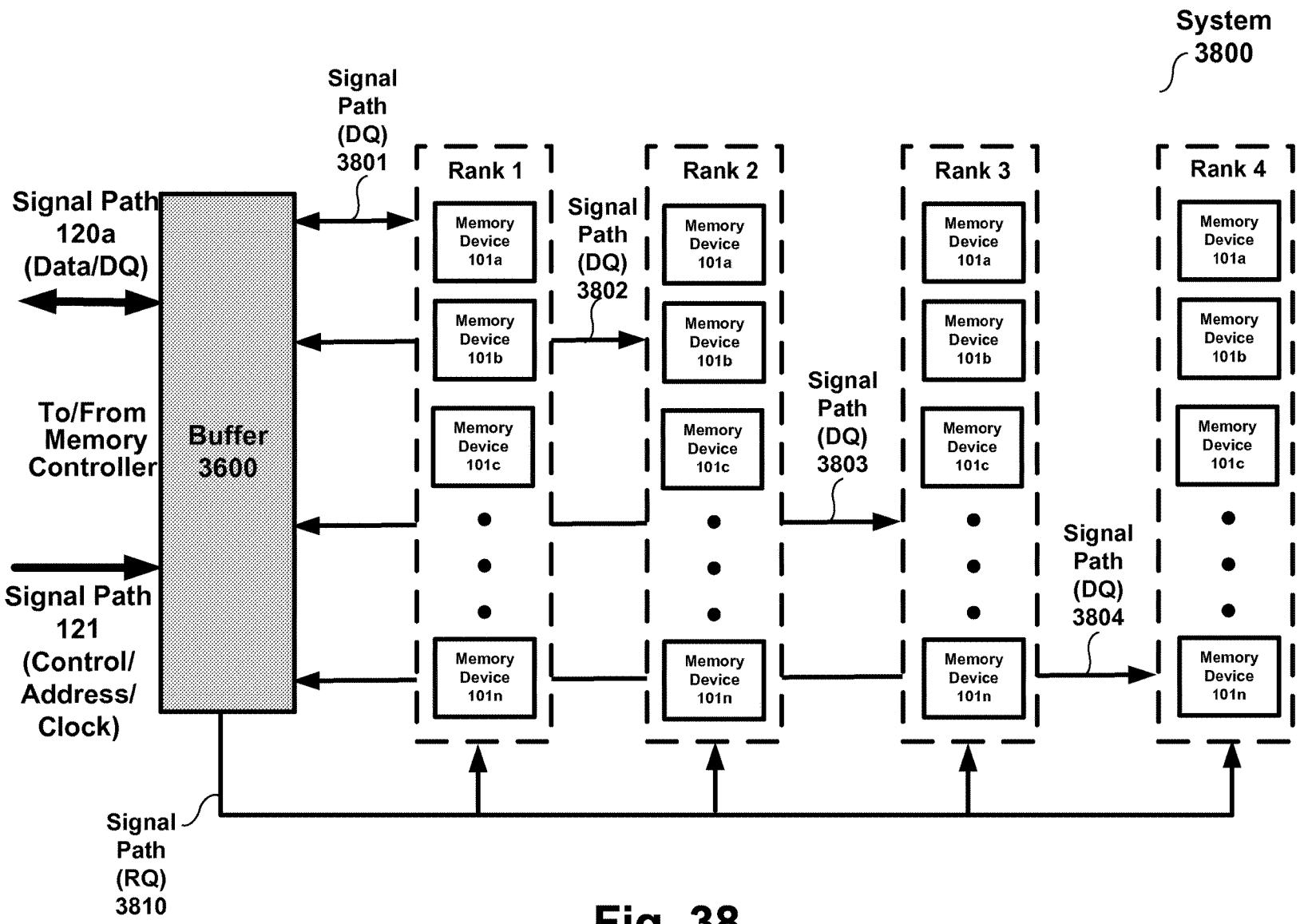
System
3800
Signal Path
(DQ)
3801
Signal Path
120a
(Data/DQ)
To/From
Memory
Controller
Buffer
3600
Signal Path
121
(Control/
Address/
Clock)
Signal
Path
(RQ)
3810
Rank 1
Rank 2
Rank 3
Rank 4
Memory Device 101a
Memory Device 101b
Memory Device 101c
Memory Device 101n
Signal
Path
(DQ)
3802
Signal
Path
(DQ)
3803
Signal
Path
(DQ)
3804

Fig. 38

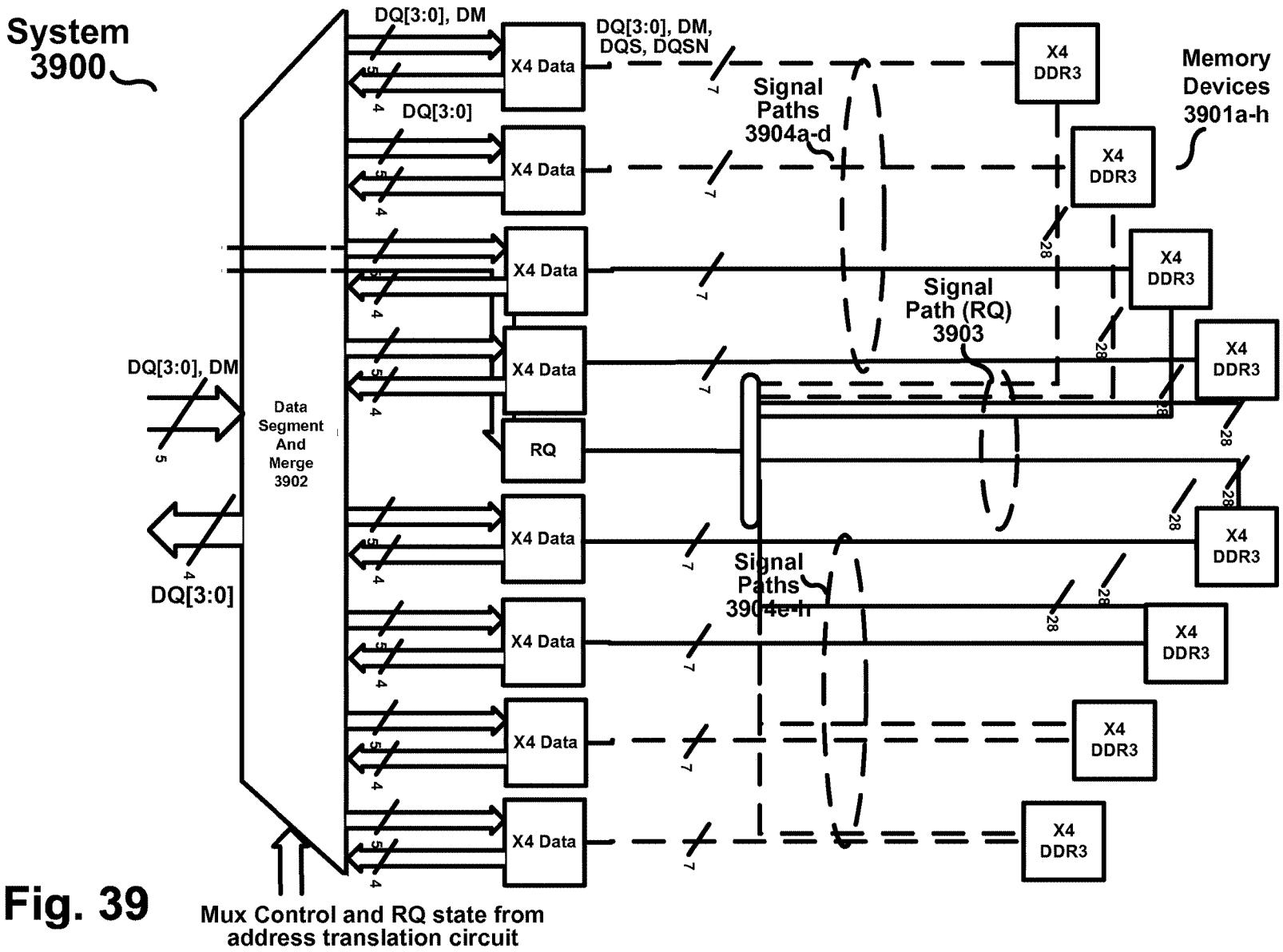
System
3900
DQ[3:0], DM
DQ[3:0]
DQ[3:0], DM
DQ[3:0]
Data
Segment
And
Merge
3902
X4 Data
RQ
DQ[3:0], DM,
DQS, DQSN
Signal
Paths
3904a-d
Signal
Path (RQ)
3903
Signal
Paths
3904e-h
X4
DDR3
Memory
Devices
3901a-h
Mux Control and RQ state from
address translation circuit

Fig. 39

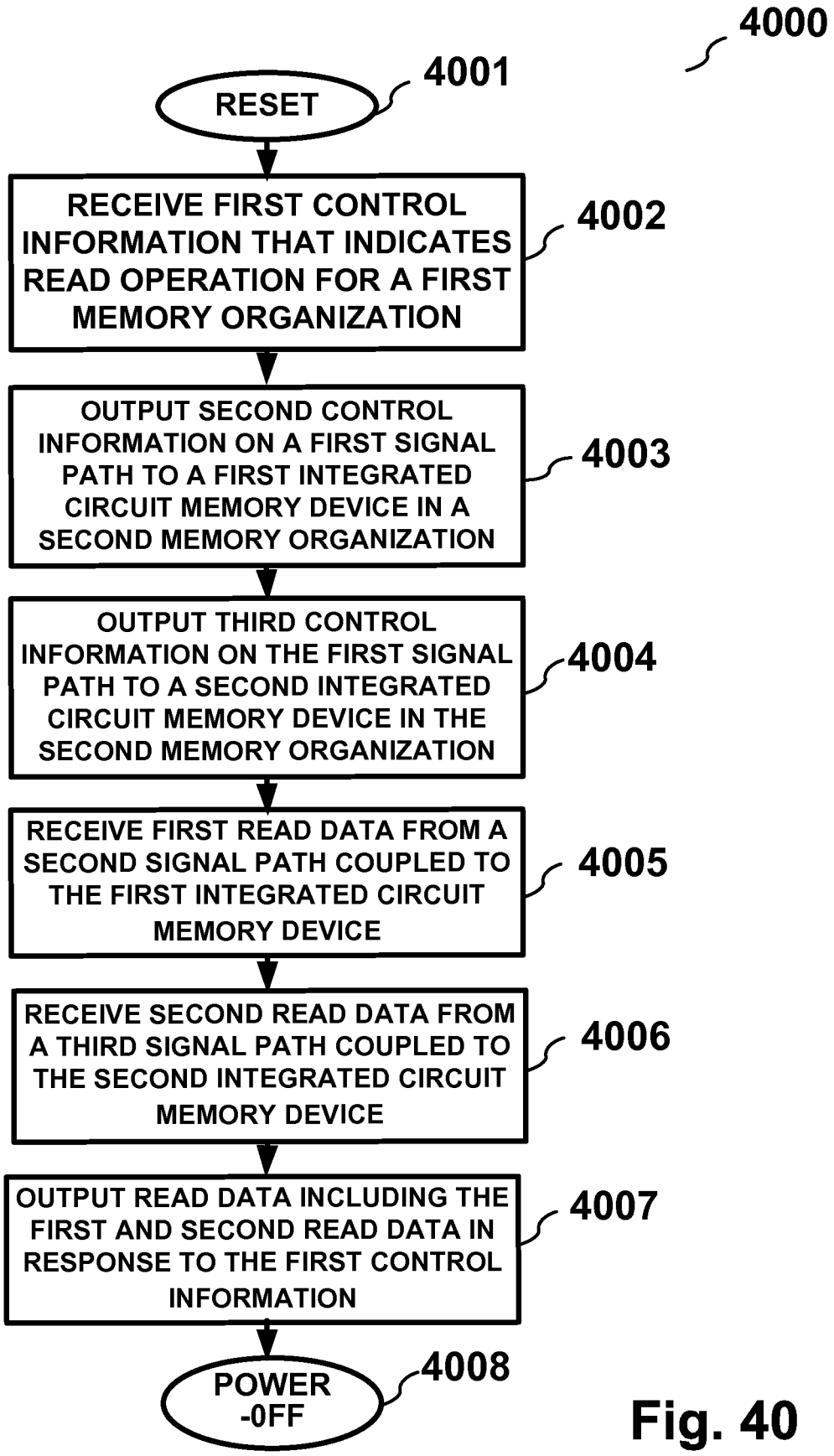
4000
RESET
4001
RECEIVE FIRST CONTROL INFORMATION THAT INDICATES READ OPERATION FOR A FIRST MEMORY ORGANIZATION
4002
OUTPUT SECOND CONTROL INFORMATION ON A FIRST SIGNAL PATH TO A FIRST INTEGRATED CIRCUIT MEMORY DEVICE IN A SECOND MEMORY ORGANIZATION
4003
OUTPUT THIRD CONTROL INFORMATION ON THE FIRST SIGNAL PATH TO A SECOND INTEGRATED CIRCUIT MEMORY DEVICE IN THE SECOND MEMORY ORGANIZATION
4004
RECEIVE FIRST READ DATA FROM A SECOND SIGNAL PATH COUPLED TO THE FIRST INTEGRATED CIRCUIT MEMORY DEVICE
4005
RECEIVE SECOND READ DATA FROM A THIRD SIGNAL PATH COUPLED TO THE SECOND INTEGRATED CIRCUIT MEMORY DEVICE
4006
OUTPUT READ DATA INCLUDING THE FIRST AND SECOND READ DATA IN RESPONSE TO THE FIRST CONTROL INFORMATION
4007
POWER -0FF
4008

Fig. 40

MEMORY SYSTEM TOPOLOGIES INCLUDING A BUFFER DEVICE AND AN INTEGRATED CIRCUIT MEMORY DEVICE

RELATED APPLICATIONS

This application is a continuation of U.S. patent application Ser. No. 16/214,986, filed on Dec. 10, 2018, which is a continuation of U.S. patent application Ser. No. 15/832,468 filed on Dec. 5, 2017 (now U.S. patent Ser. No. 10/381,067), which is a continuation of U.S. patent application Ser. No. 15/389,409 filed on Dec. 22, 2016 (now U.S. Pat. No. 9,865,329), which is a continuation of U.S. patent application Ser. No. 14/801,723 filed on Jul. 16, 2015 (now U.S. Pat. No. 9,563,583), which is a continuation of U.S. patent application Ser. No. 14/015,648 filed on Aug. 30, 2013 (now U.S. Pat. No. 9,117,035), which is a continuation of U.S. patent application Ser. No. 13/149,682 filed on May 31, 2011 (now U.S. Pat. No. 8,539,152), which is a continuation of U.S. patent application Ser. No. 12/703,521 filed on Feb. 10, 2010 (now U.S. Pat. No. 8,108,607) which is a continuation of U.S. patent application Ser. No. 12/424,442 filed on Apr. 15, 2009 (now U.S. Pat. No. 7,685,364) which is a divisional of U.S. patent application Ser. No. 11/697,572 filed on Apr. 6, 2007 (now U.S. Pat. No. 7,562,271) which is a continuation-in-part of U.S. patent application Ser. No. 11/460,899 filed on Jul. 28, 2006 (now U.S. Pat. No. 7,729,151) which is a continuation-in-part of U.S. patent application Ser. No. 11/236,401 filed on Sep. 26, 2005 (now U.S. Pat. No. 7,464,225).

FIELD OF THE INVENTION

The present invention generally relates to integrated circuit devices, high speed signaling of such devices, memory devices, and memory systems.

BACKGROUND

Some contemporary trends predict that processors, such as general purpose microprocessors and graphics processors, will continue to increase system memory and data bandwidth requirements. Using parallelism in applications such as multi-core processor architectures and multiple graphics pipelines, processors should be able to drive increases in system bandwidths at rates some predict will be doubled every three years for the next ten years. There are several major trends in dynamic random access memory ("DRAM") that may make it costly and challenging to keep up with increasing data bandwidth and system memory requirements. For example, transistor speed relative to feature size improvements in a given DRAM technology node, and the rising costs of capital investment required to move DRAM technology to greater memory densities for a given DRAM die adversely affect the rate at which DRAM technology can keep pace with the increasing data bandwidth and system capacity requirements.

BRIEF DESCRIPTION OF THE DRAWINGS

Embodiments are illustrated by way of example, and not by way of limitation, in the figures of the accompanying drawings and in which like reference numerals refer to similar elements and in which:

FIG. **1** illustrates a memory module topology including a plurality of integrated circuit memory devices and a plurality of integrated circuit buffer devices;

FIG. **2** illustrates a memory module topology having a split multi-drop control/address bus;

FIG. **3** illustrates a memory module topology having a single multi-drop control/address bus;

FIG. **4** illustrates a memory module topology that provides data between each integrated circuit buffer device and a memory module connector interface;

FIG. **5** illustrates a memory module topology including a plurality of integrated circuit memory devices and a plurality of integrated circuit buffer devices with an integrated circuit buffer device for control and address information;

FIG. **6** illustrates termination of a control/address signal path in a memory module topology of FIG. **5**;

FIG. **7** illustrates termination of data signal paths in a memory module topology of FIG. **5**;

FIG. **8** illustrates termination of a split control/address signal path in a memory module topology of FIG. **5**;

FIG. **9**A illustrates a top view of a memory module topology including a plurality of integrated circuit memory devices and a plurality of integrated circuit buffer devices;

FIG. **9**B illustrates a side view of a memory module topology including a plurality of integrated circuit memory devices and a plurality of integrated circuit buffer devices;

FIG. **9**C illustrates a bottom view of a memory module topology including a plurality of integrated circuit memory devices and a plurality of integrated circuit buffer devices;

FIG. **10** is a block diagram illustrating a topology of a device having a plurality of integrated circuit memory dies and an integrated circuit buffer die;

FIG. **11** illustrates a multi-chip package ("MCP") device having a plurality of integrated circuit memory dies and an integrated circuit buffer die;

FIG. **12** illustrates a device having a plurality of integrated circuit memory dies and a buffer die;

FIG. **13** illustrates a device having a plurality of integrated circuit memory devices and a buffer device that are disposed on a flexible tape;

FIG. **14** illustrates a device having a plurality of integrated circuit memory dies and a buffer die that are disposed side-by-side and housed in a package;

FIG. **15** illustrates a device having a plurality of integrated circuit memory dies and a buffer die that are housed in separate packages and integrated together into a larger package-on-a-package ("POP") device;

FIG. **16** illustrates a memory module topology including a serial presence detect device ("SPD");

FIG. **17** illustrates a memory module topology with each data slice having an SPD;

FIG. **18** is a block diagram of an integrated circuit buffer die;

FIG. **19** is a block diagram of a memory device;

FIGS. **20**A-B illustrate signal paths between memory module interface portions and a plurality of integrated circuit buffer devices;

FIGS. **21**A-D illustrate memory system point-to-point topologies including a master and at least one memory module (shown as buffer **101***a*) having a plurality of integrated circuit memory devices;

FIGS. **22**A-C illustrate memory system daisy chain topologies including a master and at least one memory module having a plurality of integrated circuit memory devices;

FIGS. **23**A-C and **24**A-B illustrate memory system topologies including a master to provide control/address information to a plurality of integrated circuit buffer devices;

FIGS. **25**A-B illustrate memory modules having different sized address spaces, or memory capacity;

FIGS. **26**A-B illustrate a memory system including a master and two memory modules operating during a first and second mode of operation (bypass mode);

FIG. **27** illustrates a memory system including a master and at least four memory modules;

FIGS. **28**A-B illustrate memory systems including a master and four memory modules operating during a first mode and second mode of operation (bypass mode);

FIG. **29** illustrates a bypass circuit;

FIGS. **30**A-B illustrate timing diagrams for an integrated circuit buffer device;

FIG. **31** illustrates a method to levelize memory modules according to an embodiment;

FIGS. **32**A-E illustrate tree topologies (data and/or control/address information) between an integrated circuit buffer device and a plurality of integrated circuit memory devices;

FIGS. **33**A-B illustrate fly-by topologies (data and/or control/address information) between an integrated circuit buffer device and a plurality of integrated circuit memory devices;

FIG. **34** illustrates point-to-point (also known as segmented) topology (data and/or control/address information) between an integrated circuit buffer device and a plurality of integrated circuit memory devices;

FIG. **35** illustrates an MCP (or system-in-a-package ("SIP") topology (data and/or control/address information) between an integrated circuit buffer die and a plurality of integrated circuit memory dies;

FIG. **36** is a block diagram of an integrated circuit buffer device;

FIGS. **37**A-B illustrate timing diagrams of an integrated circuit buffer device;

FIG. **38** illustrates a buffer device and a plurality of integrated circuit memory devices in different ranks;

FIG. **39** illustrates a system for accessing individual memory devices that function as respective memory ranks;

FIG. **40** illustrates a method of operation in an integrated circuit buffer device.

DETAILED DESCRIPTION

Systems, among other embodiments, include topologies for transferring data and/or control/address information between an integrated circuit buffer device (that may be coupled to a master, such as a memory controller) and a plurality of integrated circuit memory devices. For example, data may be provided between the plurality of integrated circuit memory devices and the integrated circuit buffer device using separate segmented (or point-to-point link) signal paths in response to control/address information provided from the integrated circuit buffer device to the plurality of integrated circuit buffer devices using a single fly-by (or bus) signal path. Other topology types may include forked, star, fly-by, segmented and topologies used in SIP or MCP embodiments.

An integrated circuit buffer device enables configurable effective memory organization of a plurality of integrated circuit memory devices. The memory organization represented by the integrated circuit buffer device to a memory controller may be different than the actual memory organization behind or coupled to the integrated circuit buffer device. For example, control/address information may be provided to the buffer device from a memory controller that expects a memory organization having a predetermined number of memory devices and memory banks as well as page size and peak bandwidth, but the actual memory organization coupled to the buffer device is different. The buffer device segments and/or merges the data transferred between the memory controller that expects a particular memory organization and the actual memory organization. The integrated circuit buffer device may merge read data from separate memory devices into a stream of read data. Likewise, the integrated circuit memory device may segment a write data into write data portions that are stored on a plurality of memory devices.

An integrated circuit buffer device may include data path, address translation, data path router, command decode and control (or register set) circuits. The buffer device also includes an interface that may be configured into at least three different segmentation modes: 1) Four 4-bit interfaces (4×4), 2) Two 4-bit interfaces (2×4) or 3) Two 8-bit interfaces (2×8). The different configurations allow flexibility in memory module or memory stack configurations. The buffer device may also include a pattern generator and internal memory array circuit to emulate storing and retrieving data from the plurality of integrated circuit memory devices.

The buffer device may increase memory system performance by; for example, eliminating a "time bubble" or idle time for a signal path (bus) turnaround between memory transactions to different ranks of integrated circuit memory devices coupled to segmented data signal paths. A memory rank may also include a single integrated circuit memory device. Eliminating the need for the memory controller to track memory rank access and inserting time bubbles may reduce memory controller complexity. Memory modules or memory rank capacity may be expanded using segmented data signal paths without decreasing bandwidth caused by bubble time insertion. Memory modules may include more memory devices or dies while still emulating a single rank memory module.

According to embodiments, a system includes a master device and a first memory module having a plurality of integrated circuit memory devices and a plurality of integrated circuit buffer devices that operate in first and second modes of operation (bypass mode). In a first mode of operation, a first memory module provides read data from the plurality of integrated circuit memory devices (via an integrated circuit buffer device) on a first signal path to the master and a second memory module simultaneously provides read data from its plurality of integrated circuit memory devices (via another integrated circuit buffer device on the second module) on a third signal path coupled to the master device. In a second mode of operation, the first memory module provides first read data from its plurality of integrated circuit memory devices (via the integrated circuit buffer device) on the first signal path and second read data from its plurality of integrated circuit memory devices (via the integrated circuit buffer device) on a second signal path that is coupled to a second memory module. An integrated circuit buffer device in the second memory module then bypasses the second read data from the second signal path and provides the second read data on a third signal path coupled to the master device. The first memory module may have a larger address space or capacity, such as twice as large, as compared to the second memory module.

Similarly, write data may be provided from the master device to the first and second memory modules during the first and second modes of operation.

According to embodiments, the second memory module includes a bypass circuit (such as in the integrated circuit buffer device, interface or in continuity memory module) to transfer the second read data from the second signal path to the third signal path. The bypass circuit may include a

jumper, signal trace and/or semiconductor device. The bypass circuit may also include delay circuits for adding delay in outputting the read data (or levelizing) from a memory module.

According to embodiments, a system includes a master device and at least four memory modules wherein at least two memory modules have different capacities than the other two memory modules. The four memory modules are coupled to a plurality of signal paths. The system may operate in a bypass mode in which one or more memory modules use a bypass circuit to provide read data from at least one larger capacity memory module to a master device.

According to embodiments, a system includes a master and a plurality of memory modules that may be disposed in a variety of topologies, such as point-to-point or daisy chain topologies. Memory modules may include a plurality of integrated circuit buffer devices that are coupled using a variety of topologies to receive control information, such as dedicated, fly-by, stub, serpentine or tree topologies, singly or in combination.

According to embodiments, a method determines a mode of operation of a system including a master and a plurality of memory modules. In a bypass mode of operation, delays are provided to read data from at least one memory module to levelize or ensure that read data from different capacity memory modules using different signal paths arrive at the master at approximately the same time.

According to embodiments, a memory module includes a plurality of signal paths that provide data to a memory module connector from a plurality of respective integrated circuit buffer devices (or dies) that access the data from an associated plurality of integrated circuit memory devices (or dies). In a specific embodiment, each integrated circuit buffer device is also coupled to a bussed signal path that provides control and/or address information that specifies an access to at least one integrated circuit memory device associated with the respective integrated circuit buffer device.

According to embodiments, a memory module connector includes a control/address interface portion and a data interface portion. A control/address bus couples a plurality of integrated circuit buffer devices to the control/address interface portion. A plurality of data signal paths couple the plurality of respective integrated circuit buffer devices to the data interface portion. Each integrated circuit buffer device includes 1) an interface to couple to at least one integrated circuit memory device, 2) an interface to couple to the control/address bus and 3) an interface to couple to a data signal path in the plurality of data signal paths.

According to embodiments, a memory module may include a non-volatile memory location, for example using an electrically erasable programmable read only memory ("EEPROM") (also known as a Serial Presence Detect ("SPD") device), to store information regarding parameters and configuration of the memory module. In embodiments, at least one integrated circuit buffer device accesses information stored in the SPD device.

In a package embodiment, a package houses an integrated circuit buffer die and the plurality of integrated circuit memory dies. In the package, a plurality of signal paths transfer data (read and/or write data) between the integrated circuit buffer die and the plurality of integrated circuit memory dies. The integrated circuit buffer die provides control signals from an interface of the package to the plurality of integrated circuit memory dies. Data stored in memory arrays of the plurality of integrated circuit memory dies is provided to a signal path disposed on the memory module via the integrated circuit buffer die in response to the control signals. In an embodiment, the package may be a multichip package ("MCP"). In an embodiment, the plurality of integrated circuit memory dies may be housed in common or separate packages. In an embodiment described below, the memory module may include a series of integrated circuit dies (i.e., memory die and buffer die) stacked on top of one another and coupled via a signal path.

As described herein, an integrated circuit buffer device is also referred to as a buffer or buffer device. Likewise, an integrated circuit memory device is also referred to as a memory device. A master device is also referred to as a master.

In an embodiment, an integrated circuit memory device is distinguished from a memory die in that a memory die is a monolithic integrated circuit formed from semiconductor materials for storing and/or retrieving data or other memory functions, whereas an integrated circuit memory device is a memory die having at least some form of packaging or interface that allows the memory die to be accessed.

Likewise in an embodiment, an integrated circuit buffer device is distinguished from a buffer die in that a buffer die is a monolithic integrated circuit formed from semiconductor materials and performs at least one or more buffer functions described herein, whereas an integrated circuit buffer device is a buffer die having at least some form of packaging or interface that allows communication with the buffer die.

In the embodiments described in more detail below, FIGS. **1**-**8** illustrate control/address and data signal path topologies including a plurality of integrated circuit memory devices (or dies) and a plurality of integrated circuit buffer devices (or dies) situated on a memory module. FIGS. **10**, **18**, and **19** also illustrate signal path topologies including integrated circuit memory devices (or dies) and integrated circuit buffer devices (or dies) situated on a memory module as well as the operation of an integrated circuit buffer device (or die) and memory device (or die) in embodiments among other things. FIGS. **21**A-D, **22**A-C, **23**A-C and **24**A-B illustrate system topologies. FIGS. **26**A-B, **28**A-B and **31** illustrate operating a memory system in a first and second mode of operation (bypass mode). FIGS. **32**A-E, **33**A-B, **34** and **35** illustrate topologies between an integrated circuit buffer device and a plurality of integrated circuit memory devices. FIG. **36** is a block diagram of an integrated circuit buffer device and FIGS. **37**A-B illustrates timing diagrams of an integrated circuit buffer device. FIGS. **38** and **39** illustrate a buffer device and a plurality of integrated circuit memory devices in different memory ranks. FIG. **40** illustrates a method of operation in an integrated circuit buffer device.

FIG. **1** illustrates a memory module topology including a plurality of integrated circuit memory devices and a plurality of associated integrated circuit buffer devices. In an embodiment, a memory module **100** includes a plurality of buffer devices **100***a-d* coupled to a common address/control signal path **121**. Each buffer device of the plurality of buffer devices **100***a-d* provides access to a plurality of respective integrated circuit memory devices **101***a-d* via signal paths **102***a-d* and **103**. In an embodiment, respective data slices a-d are formed by one of buffers **100***a-d* and sets of memory devices **101***a-d*. Each of buffer devices **100***a-d* is coupled to a respective set of signal paths **120***a-d*, that transfer data (read and write data) between the buffer devices **100***a-d* and a memory module connector interface. In an embodiment, mask information is transferred to buffer devices **100***a-d* from a memory module connector interface using signal paths **120***a-d*, respectively.

In an embodiment, a data slice is a portion of the memory module data signal path (or bus) that is coupled to the respective integrated circuit buffer device. The data slice may include the full data path or portions of data paths to and from a single memory device disposed on the memory module.

Integrated circuit memory devices may be considered as a common class of integrated circuit devices that have a plurality of storage cells, collectively referred to as a memory array. A memory device stores data (which may be retrieved) associated with a particular address provided, for example, as part of a write or read command. Examples of types of memory devices include dynamic random access memory ("DRAM"), including single and double data rate synchronous DRAM, static random access memory ("SRAM"), and flash memory. A memory device typically includes request or command decode and array access logic that, among other functions, decodes request and address information, and controls memory transfers between a memory array and signal path. A memory device may include a transmitter circuit to output data, for example, synchronously with respect to rising and falling edges of a clock signal, (e.g., in a double data rate type of memory device). Similarly, the memory device may include a receiver circuit to receive data, for example, synchronously with respect to rising and falling edges of a clock signal or outputs data with a temporal relationship to a clock signal in an embodiment. A receiver circuit also may be included to receive control information synchronously with respect to rising and falling edges of a clock signal. In an embodiment, strobe signals may accompany the data propagating to or from a memory device and that data may be captured by a device (e.g., memory device or buffer, or controller) using the strobe signal.

In an embodiment, an integrated circuit buffer device is an integrated circuit that acts as an interface between a memory module connector interface and at least one integrated circuit memory device. In embodiments, the buffer device may store and/or route data, control information, address information and/or a clock signal to at least one integrated circuit memory device that may be housed in a common or separate package. In an embodiment, the buffer isolates, routes and/or translates data, control information and a clock signal, singly or in combination, between a plurality of memory devices and a memory module connector interface. An embodiment of a memory module connector interface is described below and shown in FIGS. **9**A-C.

At least one signal path **121**, as shown in FIG. **1**, disposed on memory module **100**, transfers control and/or address (control/address) information between at least one of the buffer devices **100***a-d* and a memory module connector interface in various embodiments. In an embodiment, signal path **121** is a multi-drop bus. As illustrated in FIGS. **2-8** and described below, alternate topologies for transferring control/address information, data and clock signals between one or more buffer devices **100***a-d* and a memory module connector interface may be used in alternate embodiments. For example, a split multi-drop control/address bus, segmented multi-drop control/address bus, and point-to-point and/or daisy chain topologies for a data bus may be employed.

In an embodiment, clock signals and/or clock information may be transferred on at least one signal line in signal path **121**. These clock signal(s) provide one or more clock signals having a known frequency and/or phase. In an embodiment, a clock signal is synchronized with or travels along side the control/address information. In an embodiment, an edge of the clock signal has a temporal relationship with an edge of a control/address signal representing the control/address information. In an embodiment, a clock signal is generated by a clock source, master device (e.g., controller device) and/or buffer device.

In an embodiment, a clock signal and/or clock information may be transferred on at least one signal line in respective signal paths **120***a-d*. Buffer devices **100***a-d* may receive and/or transmit a clock signal with data on signal paths **120***a-b*. In an embodiment, write data is provided to buffer devices **100***a-d* on signal paths **120***a-d* and a clock signal is provided on signal paths **120***a-d* along side write data. In an embodiment, a clock signal (such as a clock-to-master ("CTM")) is provided from buffer devices **100***a-d* on signal paths **120***a-d* along side read data on signal paths **120***a-d*. In an embodiment, a clock signal is synchronized with or travels along side the write and/or read data. An edge of the clock signal has a temporal relationship or is aligned with an edge of a data signal representing write and/or read data. Clock information can be embedded in data, eliminating the use of separate clock signals along with the data signals.

In an embodiment, a read, write and/or bidirectional strobe signal may be transferred on at least one signal line in respective signal paths **120***a-d*. Buffer devices **100***a-d* may receive and/or transmit a strobe signal with data on signal paths **120***a-b*. In an embodiment, write data is provided to buffer devices **100***a-d* on signal paths **120***a-d* and a strobe signal is provided on signal paths **120***a-d* along side write data. In an embodiment, a strobe signal is provided from buffer devices **100***a-d* on signal paths **120***a-d* along side read data on signal paths **120***a-d*. In an embodiment, a strobe signal is synchronized with or travels along side the write and/or read data. An edge of the strobe signal has a temporal relationship or is aligned with an edge of a data signal representing write and/or read data.

In an embodiment, addresses (for example, row and/or column addresses) for accessing particular memory locations in a particular integrated circuit memory device and/or commands are provided on signal path **121** from a memory module connector interface. In an embodiment, a command relates to a memory operation of a particular integrated circuit memory device. For example, a command may include a write command to store write data at a particular memory location in a particular integrated circuit memory device and/or a read command for retrieving read data stored at a particular memory location from a particular integrated circuit memory device. Also, multiple memory devices in different data slices can be accessed simultaneously. In embodiments, a command may include row commands, column commands such as read or write, mask information, precharge and/or sense command. In an embodiment, control information is transferred on signal path **121** over a common set of lines in the form of a time multiplexed packet where particular fields in the packet are used for including command operation codes and/or addresses. Likewise, packets of read data may be transferred from integrated circuit memory devices via buffers **100***a-d* on respective signal paths **120***a-d* to a memory module connector interface. In an embodiment, a packet represents one or more signals asserted at particular bit windows (or a time interval) for asserting a signal on particular signal lines.

In an embodiment, chip select information may be transferred on one or more signal lines in signal path **121**. In an embodiment, chip select information may be one or more chip select signals on respective signal lines having predetermined voltage values or states (or logic values) that select

and enable operation of a "chip" or integrated circuit memory device/buffer device.

In embodiments, memory module **100** communicates (via a memory module connector interface) with a master device (e.g., a processor or controller).

FIG. **2** illustrates an embodiment of a memory module topology having a split multi-drop control/address/clock bus. In particular, memory module **200** includes a split multi-drop control/address bus **221** coupled to buffers **100***a-d* and a memory module connector interface. With reference to FIG. **2**, a first portion of bus **221** is terminated by termination **230** and a second portion of bus **221** is terminated by termination **231**. In an embodiment, the impedance of termination **230** matches the impedance of the first portion of bus **221** (Z0) coupled to buffers **100***c-d* and the impedance of termination **231** matches the impedance of the second portion of bus **221** (Z1) coupled to buffers **100***a-b*. In an embodiment, impedance Z0 equals impedance Z1. In embodiments, terminations **230** and **231**, singly or in combination, are disposed on memory module **100**, buffer devices **100***a* and **100***d* or packages used to house buffer devices **100***a* and **100***d*.

FIG. **3** illustrates a memory module topology having a single multi-drop control/address/clock bus terminated by termination **330**. In an embodiment, the impedance of termination **330** matches the impedance of signal path **121** (or control/address/clock bus). In embodiments, termination **330**, singly or in combination, is disposed on memory module **300** or on buffer device **100***d*.

FIG. **4** illustrates a memory module topology that provides data between each integrated circuit buffer device and a memory module connector interface. In an embodiment, each signal path **120***a-d* is terminated by an associated termination **420***a-d*, respectively. In an embodiment, terminations **420***a-d* have respective impedances that match the impedance Z0 of each of the signal paths **120***a-d*. In embodiments, terminations **420***a-d*, singly or in combination, are disposed on memory module **400**, each of buffer devices **100***a-d* or packages used to house buffer devices **100***a-d*.

Referring to FIG. **1**, a control/address signal rate ratio of signal path **121** to signal path **103** may be 2:1 (or other multiples such as 4:1, 8:1, etc.) so that a memory module connector interface is able to operate as fast as specified while memory devices **101***a-d* may operate at half (quarter, eighth, etc) the control/address signaling rate so that relatively lower cost memory devices may be used. Similarly, a data signal rate of one of signal paths **120***a-d* to one of signal paths **102***a-d* may be 2:1 (or other multiple such as 4:1, 8:1, etc) so that a memory module connector interface is able to operate as fast as specified while memory devices **101***a-d* may operate at half (quarter, eighth, etc.) the data signaling rate so that relatively lower cost memory devices may be used.

FIG. **5** illustrates a memory module topology including a plurality of integrated circuit memory devices and a plurality of integrated circuit buffer devices with an integrated circuit buffer device **501** for control, address and/or clock information. Memory module **500** is similar to memory module **100** except that buffer device **501** is coupled to signal paths **121** and **121***a-b*. Buffer device **501** outputs control, address and/or clock information to buffer devices **100***a-b* on signal path **121***a* and to buffer devices **100***c-d* on signal path **121***b*. In an embodiment buffer device **501** copies control, address and/or clock information received on signal path **121** and repeats the control, address and/or clock information on signal paths **121***a-b*. In an embodiment, buffer device **501** is a clocked buffer device that provides a temporal relationship with control and address information provided on signal paths **121***a-b*. In an embodiment, signal paths **121***a-b* include at least one signal line to provide a clock signal and/or clock information. In an embodiment, buffer device **501** includes a clock circuit **1870** as shown in FIG. **18**. In an embodiment, buffer device **501** receives control information, such as a packet request, that specifies an access to at least one of the integrated circuit memory devices **101***a-d* and outputs a corresponding control signal (on signal path **121***a* and/or **121***b*) to the specified integrated circuit memory device.

FIG. **6** illustrates a memory module topology similar to that illustrated in FIG. **5** except that a termination **601** is coupled to signal path **121** on memory module **600**. In an embodiment, the impedance of termination **601** matches the impedance Z0 of signal path **121**. In embodiments, termination **601** is disposed on memory module **600** or buffer device **501** or a package used to house buffer device **501**.

FIG. **7** illustrates a memory module topology that provides data to and/or from each integrated circuit buffer device and terminations coupled to signal paths. In an embodiment, each signal path **120***a-d* is terminated by associated terminations **701***a-d*, respectively. In an embodiment, terminations **701***a-d* have respective impedances that match the impedance Z0 of each of the signal paths **120***a-d*. In embodiments, terminations **701***a-d*, singly or in combination, are disposed on memory module **700**, buffer devices **100***a-d* or packages used to house buffer devices **100***a-d*.

FIG. **8** illustrates a memory module topology having a split multi-drop signal path between a buffer device for control, address and/or clock information and the plurality of buffer devices. In particular, memory module **800** includes a split multi-drop control/address bus **121***a-b* coupled to buffers **100***a-d* and a buffer device **501**. In an embodiment, a first portion of bus **121***a* is terminated by termination **801** and a second portion of bus **121***b* is terminated by termination **802**. In an embodiment, the impedance of termination **801** matches the impedance of the first leg (Z0) and the impedance of termination **802** matches the impedance of the second leg (Z1). In an embodiment, impedance Z0 equals impedance Z1. In embodiments, terminations **801** and **802**, singly or in combination, are disposed on memory module **800**, buffer devices **100***a* and **100***d* or packages used to house buffer devices **100***a* and **100***d*.

Referring to FIG. **5**, a control/address signal rate ratio of signal path **121** to signal path **121***a* (or **121***b*) to signal path **103** may be 2:1:1 (or other multiples such as 4:1:1, 8:1:1, etc.) so that other multi-drop bus topology embodiments using signal paths **121***a* (or **121***b*) and signal path **103** do not have to necessarily operate as high a signal rate as an embodiment that uses signal path **121** as shown in FIG. **1**. Also like FIG. **1**, a control/address signal rate ratio of signal path **121** to signal path **103** may be 2:1 (or other multiples such as 4:1, 8:1, etc.) so that a memory module connector interface is able to operate as fast as specified while memory devices **101***a-d* may operate at half (or quarter, eighth, etc.) the control/address signaling rate so that relatively lower cost memory devices may be used. Similarly, a data signal rate of one of signal paths **120***a-d* to one of signal paths **102***a-d* may be 2:1 (or other multiple such as 4:1, 8:1, etc.) so that a memory module connector interface is able to operate as fast as the specified signaling rate while memory devices **101***a-d* may operate at half (or quarter, eighth, etc.) the data signaling rate so that relatively lower cost memory devices may be used.

FIG. **9**A illustrates a top view of a memory module topology including a plurality of integrated circuit memory devices and a plurality of integrated circuit buffer devices coupled to a connector interface. In an embodiment, memory module **900** includes a substrate **910** having a standard dual in-line memory module ("DIMM") form factor or other module form factor standards, such as small outline DIMM ("SO-DIMM") and very low profile DIMM ("VLP-DIMM"). In alternate embodiments, substrate **910** may be, but is not limited to, a wafer, printed circuit board ("PCB"), package substrate like BT epoxy, flex, motherboard, daughterboard or backplane, singly or in combination.

In an embodiment, memory module **900** includes pairs of memory devices **101***a-b* and buffer devices **100***a-d* disposed on a first side of substrate **910**. In alternate embodiments, more or less memory devices and buffer devices are used. In an embodiment, pairs of memory devices **101***c-d* are also disposed on a second side of memory module **900** as shown in a side and bottom view of memory module **900** in FIGS. **9**B and **9**C. In an embodiment, each memory device and buffer device are housed in separate packages. In alternate embodiments, memory devices and buffer devices may be housed in MCP package embodiments described herein.

Memory module **900** includes connector interface **920** that has different interface portions for transferring data and control/address/clock signals. For example, a first side of memory module **900** includes connector interface portions **920***a-d* used to transfer data signals and a connector interface portion **930***a* used to transfer control/address signals. In an embodiment, connector interface portion **930***a* also transfers a clock signal and/or clock information. In an embodiment, a second side of memory module **900** including connector interface portions **920***e-h* are used to transfer data signals and a connector interface portion **930***b* is used to transfer control/address signals. In an embodiment, connector interface portion **930***b* also transfers a clock signal and/or clock information.

In an embodiment, connector interface **920** is disposed on an edge of substrate **910**. In an embodiment, a memory module **900** is inserted into a socket **940** disposed on substrate **950**. In an embodiment, substrate **950** is a main board or PCB with signal paths **960***a-b* for transferring signals on substrate **950**. In an embodiment, signal paths **960***a* and **960***b* are signal traces or wires. In an embodiment, signal paths **960***a* and **960***b* are coupled to other sockets disposed on substrate **950** that may have another memory module inserted and/or coupled to a master.

In an embodiment, connector interface portions include at least one contact or conducting element, such as a metal surface, for inputting and/or outputting an electrical signal. In alternate embodiments, a contact may be in the form of any one of or a combination of a ball, socket, surface, signal trace, wire, a positively or negatively doped semiconductor region and/or pin, singly or in combination. In an embodiment, a connector interface as described herein, such as connector interface **920**, is not limited to physically separable interfaces where a male connector or interface engages a female connector (or socket **940**) or interface. A connector interface also includes any type of physical interface or connection, such as an interface used in a system-in-a-package ("SIP") where leads, solder balls or connections from a memory module are soldered to a circuit board.

In an alternate embodiment, memory module **900** is included in an embedded memory subsystem, such as one in a computer graphics card, video game console or a printer. In an alternate embodiment, memory module **900** is situated in a personal computer or server.

In an embodiment, a master communicates with memory modules illustrated in FIGS. **1-9** and **16-17**. A master may transmit and/or receive signals to and from the memory modules illustrated in FIGS. **1-9** and **16-17**. A master may be a memory controller, peer device or slave device. In embodiments, a master is a memory controller, which may be an integrated circuit device that contains other interfaces or functionality, for example, a Northbridge chip of a chipset. A master may be integrated on a microprocessor or a graphics processor unit ("GPU") or visual processor unit ("VPU"). A master may be implemented as a field programmable gate array ("FPGA"). Memory modules, signal paths, and a master may be included in various systems or subsystems such as personal computers, graphics cards, set-top boxes, cable modems, cell phones, game consoles, digital television sets (for example, high definition television ("HDTV")), fax machines, cable modems, digital versatile disc ("DVD") players or network routers.

In an embodiment, a master, memory modules and signal paths are in one or more integrated monolithic circuits disposed in a common package or separate packages.

FIG. **10** is a block diagram illustrating an embodiment of a device **1000** having a plurality of integrated circuit memory devices **101***a-d* and a buffer **100***a*. Here, data (read and/or write) may be transferred between the plurality of integrated circuit memory devices **101***a-d* and buffer **100***a* on a signal path **1006** (data). Signal path **1006** is a signal path situated internal to device **1000** and corresponds to signal paths **1113***a-d* and **1114** shown in FIG. **11**. Signal path **1006** is a bus for providing bidirectional data signals between a plurality of integrated circuit memory devices **101***a-d* and buffer **100***a*. An example of bidirectional data signals includes signals traveling from one or more of integrated circuit memory devices **101***a-d* to buffer **100***a* and also signals traveling from buffer **100***a* to one or more of integrated circuit memory devices **101***a-d*. Signal path **1005** is a signal path internal to device **1000** and corresponds to signal paths **1116***a-d* and **1117** shown in FIG. **11**. Signal path **1005** is a bus for providing unidirectional control/address/clock signals from a buffer **100***a* to a plurality of integrated circuit memory devices **101***a-d*. In an example of a unidirectional bus, signals travel in only one direction, i.e., in this case, from only buffer **100***a* to one or more of integrated circuit memory devices **101***a-d*. Signal path **1005** includes individual control signal lines, for example, a row address strobe line, column address strobe line, chip select line, etc., and address signal lines. Signal path **1005** may include a fly-by clock line to transfer a clock signal from buffer **100***a* to integrated circuit memory devices **101***a-d*. Signal path **1005** may transfer a clock signal from one or more integrated circuit memory devices **101***a-d* to buffer **100***a*.

In an embodiment, buffer **100***a* communicates with a serial presence detect ("SPD") device to store and retrieve parameters and configuration information regarding device **1000** and/or memory module **900**. In an embodiment, an SPD **1002** is a non-volatile storage device. Signal path **1004** couples SPD **1002** to buffer **100***a*. In an embodiment, signal path **1004** is an internal signal path for providing bidirectional signals between SPD **1002** and buffer **100***a*.

In an embodiment, SPD **1002** is an EEPROM device. However, other types of SPD **1002** are possible, including but not limited to a manual jumper or switch settings, such as pull-up or pull-down resistor networks tied to a particular logic level (high or low), which may change state when a memory module is added or removed from a system.

In an embodiment, SPD **1002** is a memory device that includes registers that stores configuration information that can be easily changed via software during system operation, allowing a high degree of flexibility, and making configuration operations that are transparent to an end user.

In an embodiment illustrated in FIG. **18**, functionality of the SPD mentioned above may be integrated into buffer device **100***a* using a register set, such as configuration register set **1881**. Referring to FIG. **18**, SPD logic and interface **1820***c* may be preconfigured with information pertaining to the buffer and memory devices connected to the buffer, or may store information pertaining to only one of the memory devices or the buffer device **100***a*. Control inputs to the buffer may determine when a storage node within the register set will sample the information to preload or preconfigure the SPD logic and interface **1820***c*. The term register may apply either to a single-bit-wide register or multi-bit-wide register.

In an embodiment illustrated by FIG. **10**, SPD **1002** stores information relating to configuration information of memory module **900** or a memory system. For example, configuration information may include repair and redundancy information to repair a defective memory device, defective memory cells or peripheral circuits on a memory device, and/or signal path. In an embodiment, SPD configuration information includes memory module population topology, such as a number, a position and a type of memory device in a package and/or on a memory module, or rank, if any. SPD configuration information may include an amount of memory capacity of one or more memory modules and/or timing information to levelize signals between memory modules and a master device in a memory system. In an embodiment, SPD configuration information includes a serialization ratio for interfaces in a buffer and/or information regarding configuring the width of a buffer. In an embodiment, SPD configuration information includes a first value that represents the desired width of buffer device **100***a* or includes multiple values that represent the range of possible widths of the buffer device **100***a*, and a second value that represents the desired width of interface **1820***b* as illustrated in FIG. **18**.

In an embodiment, SPD configuration information includes timing information or parameters for accessing memory devices, such as a time to access a row or the memory device, a time to access a column of the memory device, a time between a row access and a column access, a time between a row access and a precharge operation, a time between a row sense applied to a first bank of a memory array and a row sense applied to a second bank of the memory array and/or a time between a precharge operation applied to a first bank in a memory array and a precharge operation applied to a second bank of the memory array.

In an embodiment, the stored timing information may be expressed in terms of time units where a table of values maps specific time units to specific binary codes. During an initialization or calibration sequence, a master or a buffer may read SPD configuration information and determine the proper timing information for one or more memory devices. For example, a master may also read information representing the clock frequency of a clock signal from an SPD **1002**, and divide the retrieved timing information by a clock period of a clock signal. (The clock period of the clock signal is the reciprocal of the clock frequency of the clock signal). Any remainder resulting from this division may be rounded up to the next whole number of clock cycles of the clock signal.

Signal paths **120***a* and **121**, as shown in FIG. **10**, are coupled to buffer **100***a*. In an embodiment, signal path **121** transfers unidirectional control/address/clock signals to buffer **100***a*. In an embodiment, signal path **120***a* transfers bidirectional or unidirectional data signals to and from buffer **100***a*. Other interconnect and external connect topologies may also be used for device **1000** in alternate embodiments. For example, buffer **100***a* may be coupled to a single multi-drop control bus, a split multi-drop control bus, or a segmented multi-drop bus.

In an embodiment, device **1000** has two separate power sources. Power source V1 supplies power to one or more memory devices (memory devices **101***a-d*) on memory module **900**. Power source V2 supplies power to one or more buffers (buffer **100***a*) on memory module **900**. In an embodiment, the buffer **100***a* has internal power regulation circuits to supply power to the memory devices **101***a-d*.

FIG. **11** illustrates a device **1100** including a plurality of integrated circuit memory dies **1101***a-d* and a buffer die **1100***a* housed in or upon a common package **1110** according to embodiments. As described herein in other embodiments and illustrated in FIGS. **12-15** and **35**, a plurality of integrated circuit memory dies **1101***a-d* and buffer die **1100***a* are disposed in multiple package type embodiments. For example, a plurality of integrated circuit memory dies **1101***a-d* and a buffer die **1100***a* may be stacked, on a flexible tape, side-by-side or positioned in separate packages on a device substrate. Buffer die **1100***a* is used to provide signals, including control/address/clock information and data, between a plurality of integrated circuit memory dies **1101***a-d* and a device interface **1111** that includes contacts **1104***a-f*. In an embodiment, one or more contacts **1104***a-f* is similar to contacts of connector interface **920**. Contacts **1104***a-f* are used to couple device **1100** to substrate **910**, and in particular to signal paths **120***a* and **121**, of memory module **100** in an embodiment. Device interface **1111** also includes signal paths **1118** and **1115** to transfer signals between contacts **1104***a-f* and buffer **100***a* via buffer interface **1103**. Signals are then transferred between a plurality of memory dies **1101***a-d* and buffer die **1100***a* via buffer interface **1103** and signal paths **1117** (disposed in device interface **1111**) and **1116***a-d* as well as signal paths **1114** (disposed in device interface **1111**) and **1113***a-d*. In an embodiment, spacers **1102***a-c* are positioned between integrated circuit memory dies **1101***a-d*. In an embodiment, spacers **1102***a-c* are positioned to dissipate heat. Similarly, buffer die **1100***a* is disposed away from a plurality of integrated circuit memory dies **1101***a-d* to alleviate heat dissipation near the memory devices. In an embodiment, signal paths are coupled to each other and integrated circuit memory dies **1101***a-d* by a solder ball or solder structure.

FIG. **12** illustrates a stacked package device **1200** having a package **1210** containing a plurality of integrated circuit memory dies **1101***a-d* and a separate package **1290** having a buffer die **1100***a*. Both packages **1210** and **1290** are stacked and housed to make device **1200**. In an embodiment, a plurality of integrated circuit memory dies has separate packages and is stacked on package **1290**. Device **1200** has similar components illustrated in FIG. **11**. Buffer die **1100***a* communicates with a plurality of integrated circuit memory dies **1101***a-d* as described herein. Device **1200** has memory dies **1101***a-d* stacked upon buffer die **1100***a* and separated by contacts **1201***a-d*. In an embodiment, contacts **1201***a-d* are solder balls that couple signal paths **1117** and **1114** to signal paths **1202** and **1203** that are coupled to buffer interface **1103**.

FIG. **13** illustrates devices **1300** and **1301** having a plurality of integrated circuit memory devices **101***a-b* (**101***a-c* in device **1301**) and a buffer device **100***a* that are disposed on a flexible tape **1302** according to embodiments. Buffer device **100***a* communicates with a plurality of integrated circuit memory devices as described herein. Signal path **1305** disposed on or in flexible tape **1302** transfers signals between a plurality of integrated circuit memory devices **101***a-c* and buffer **100***a*. Contacts, such as a grid array of balls **1304**, couple each integrated circuit memory device in a plurality of integrated circuit memory devices **101***a-c* and a buffer **100***a* to signal path **1305** in flexible tape **1302** in an embodiment. Adhesive **1303** may be used to couple a plurality of integrated circuit memory devices **101***a-c* to each other and to a buffer **100***a* in an embodiment. Device **1300** and **1301** are disposed in common package in an embodiment.

FIG. **14** illustrates a device **1400** having a plurality of integrated circuit memory dies **1101***a-d* and **1401***a-d* and a buffer die **1100***a* that are disposed side-by-side and housed in a package **1410**. Device **1400** has similar components illustrated in FIG. **11**. Buffer die **1100***a* communicates with a plurality of integrated circuit memory dies **1101***a-d* and **1401***a-d* as described herein. In an embodiment, a plurality of integrated circuit memory dies **1101***a-d* and **1401***a-d* and a buffer die **1100***a* are disposed side-by-side on a substrate **1450** that is coupled to device interface **1411**. A plurality of integrated circuit memory dies **1401***a-d* is separated by spacers **1402***a-c*. In an embodiment, a single integrated circuit memory die **1101***d* and a single integrated circuit memory die **1401***d* are disposed side-by-side with buffer die **1100***a*. Device interface **1411** includes contacts **1104***a-f*. Signals are transferred between buffer interface **1103** and contacts **1104***a-f* by signal paths **1418** and **1415**. Signals are transferred between buffer interface **1103** and signal paths **1116***a-d* (or integrated circuit memory dies **1101***a-d*) by signal path **1417**. Similarly, signals are transferred between buffer interface **1103** and signal paths **1113***a-d* (or integrated circuit memory dies **1401***a-d*) by signal path **1414**.

FIG. **15** illustrates a device **1500** having a plurality of integrated circuit memory dies **1101***a-b* and a buffer die **1100***a* that are housed in separate packages **1501**, **1505** and **1520**, respectively. Device **1500** has similar components illustrated in FIG. **11**. Buffer die **1100***a* communicates with integrated circuit memory dies **1101***a-b* as described herein. Integrated circuit memory dies **1101***a-b* and a buffer die **1100***a* are disposed on substrate **1530** that includes signal paths **1504**, **1509**, **1515** and **1518**. Integrated circuit memory die **1101***a* includes memory interface **1507** having contacts **1508**. Integrated circuit memory die **1101***b* includes memory interface **1503** having contacts **1541**. Buffer die **1100***a* includes a buffer interface **1103** having contacts **1560**. Signals are transferred between buffer interface **1103** and contacts **1104***a-f* by signal paths **1515** and **1518**. Signals are transferred between buffer interface **1103** and integrated circuit memory die **1101***a* by signal path **1509** via memory interface **1507** and contacts **1508**. Similarly, signals are transferred between buffer interface **1103** and integrated circuit memory die **1101***b* by signal path **1504** via memory interface **1503** and contacts **1541**. As described herein, device **1500** is coupled to a memory module **900** via contacts **1104***a-f*.

FIG. **16** illustrates a memory module having an SPD **1603** according to an embodiment. Memory module **1610** includes a plurality of integrated circuit memory devices (or dies) and buffer devices (or dies) disposed on substrate **930** along with SPD **1603**. FIG. **16** illustrates a memory module **1610** having a single SPD **1603** that can be accessed by each buffer device **100***a-b* positioned on substrate **930**. Signal path **1601** allows access to SPD **1603** from connector interface **920** and one or more buffers **100***a-b*. In an embodiment, signal path **1601** is a bus. SPD **1603** may have configuration and/or parameter information written to or read by a master by way of connector interface **920** and signal path **1601**. Likewise, buffers **100***a-b* may write to or read from SPD **1603** via signal path **1601**.

FIG. **17** illustrates a memory module **1710** with each device **1711***a-b* or data slice a-b having an associated SPD **1720***a-b*, buffer device (or die) **100***a-b* and at least one integrated circuit memory device **101***a* (or die) according to an embodiment. The plurality of buffers **100***a-b* and associated plurality of SPDs **1720***a-b* are disposed on substrate **930**. Configuration and/or parameter information is accessed from SPDs **1720***a-b* using signal path **1701**, which is coupled, to connector interface **920** and each SPD **1720***a-b*. In particular, signal path **1701** couples SPD **1720***a-b* of device **1711***a-b* to connector interface **920**. In an embodiment, signal path **1701** is a bus. In an alternate embodiment, signal path **1701** couples SPD **1720***a* and SPD **1720***b* in a daisy chain or serial topology. In an embodiment, one or more buffer devices **100***a-b* of devices **1711***a-b* may access (read and/or write) respective SPDs **1720***a-b*. Likewise, a master may access (read and/or write) respective SPDs **1720***a-b* using signal path **1701**. In an embodiment, configuration and/or parameter information is transferred using a header field or other identifier so that SPDs coupled in a daisy chain may forward the SPD information to the intended destination SPD.

FIG. **18** illustrates a block diagram of a buffer device **100***a* (or die, such as buffer die **1100***a*) according to embodiments. Buffer **100***a* includes buffer interface **1103***a*, interfaces **1820***a-c*, redundancy and repair circuit **1883**, multiplexer **1830**, request and address logic circuit **1840**, data cache and tags circuit **1860**, computations circuit **1865**, configuration register set **1881**, and clock circuit **1870**, singly or in combination.

In a memory read operation embodiment, buffer **100***a* receives control information (including address information) that may be in a packet format from a master on signal path **121** and in response, transmits corresponding signals to one or more, or all of memory devices **101***a-d* on one or more signal paths **1005**. One or more of memory devices **101***a-d* may respond by transmitting data to buffer **100***a* which receives the data via one or more signal paths **1006** and in response, transmits corresponding signals to a master (or other buffer). A master transmits the control information via one or more signal paths **121** and receives the data via one or more signal paths **120***a*.

By bundling control and address information in packets, protocols required to communicate to memory devices **101***a-d* are independent of the physical control/address interface implementation.

In a memory write operation embodiment, buffer **100***a* receives control information (including address information) that may be in a packet format from a master on signal path **121** and receives the write data for one or more memory devices **101***a-d* that may be in a packet format from a master on signal path **120***a*. Buffer **100***a* then transmits corresponding signals to one or more, or all of memory devices **101***a-d* on one or more signal paths **1006** so that the write data may be stored.

A master transmits the control/address/clock information via one or more signal paths **121** and transmits the write data via one or more signal paths **120***a*.

In an embodiment, simultaneous write and/or read operations may occur for different memory devices in memory devices **101***a-d*.

In an embodiment, control information that is provided to buffer **100***a* causes one or more memory operations (such as write and/or read operations) of one or more memory devices **100***a-d*, while the same control information may be provided to buffer **100***b* which causes the same memory operations of one or more memory devices **100***a-d* associated with buffer **100***b*. In another embodiment, the same control information may be provided to buffer **100***a* and buffer **100***b*, yet different memory operations occur for the one or more memory devices **100***a-d* associated with each buffer **100***a-b*.

In an embodiment, buffer interface **1103***a* couples signal paths **121** and **120***a* to buffer **100***a* as shown in FIG. **10**. In an embodiment, buffer interface **1103***a* corresponds to buffer interface **1103** shown in FIGS. **11**, **12**, **14** and **15**. In an embodiment, buffer interface **1103***a* includes at least one transceiver **1875** (i.e. transmit and receive circuit) coupled to signal path **120***a* to transmit and receive data and at least one receiver circuit **1892** coupled to signal path **121** to receive control/address/clock information. In an embodiment, signal paths **121** and **120***a* include point-to-point links. Buffer interface **1103***a* includes a port having at least one transceiver **1875** that connects to a point-to-point link. In an embodiment, a point-to-point link comprises one or a plurality of signal lines, each signal line having no more than two transceiver connection points. One of the two transceiver connection points is included on buffer interface **1103***a*. Buffer interface **1103***a* may include additional ports to couple additional point-to-point links between buffer **100***a* and other buffer devices on other devices and/or memory modules. These additional ports may be employed to expand memory capacity as is described in more detail below. Buffer **100***a* may function as a transceiver between a point-to-point link and other point-to-point links. In an embodiment, buffer interface **1103***a* includes a repeater circuit **1899** to repeat data, control information and/or a clock signal. In an embodiment, buffer interface **1103***a* includes a bypass circuit **1898** to transfer signals between connector interface portions.

In an embodiment, termination **1880** is disposed on buffer **100***a* and is connected to transceiver **1875** and signal path **120***a*. In this embodiment, transceiver **1875** includes an output driver and a receiver. Termination **1880** may dissipate signal energy reflected (i.e., a voltage reflection) from transceiver **1875**. Termination **1880**, as well as other termination described herein, may be a resistor or capacitor or inductor, singly or a series/parallel combination thereof. In alternate embodiments, termination **1880** may be external to buffer **100***a*. For example, termination **1880** may be disposed on a substrate **910** of a memory module **900** or on a package used to house buffer **100***a*.

Interface **1820***a* includes at least one transmitter circuit **1893** coupled to signal path **1005** to transmit control/address/clock information to one or more memory devices. In an embodiment, interface **1820***a* includes a transceiver that may transfer control/address/clock information between buffers disposed on a common memory module or different memory modules.

Interface **1820***b* includes a transceiver **1894** coupled to signal path **1006** to transfer data between buffer **100***a* and one or more memory devices **101***a-d* as illustrated in FIG. **10**. SPD logic and interface **1820***c* includes a transceiver **1896** coupled to signal path **1004** to transfer configuration and/or parameter information between buffer **100***a* and an SPD **1002** as illustrated in FIG. **10**. In an embodiment, interface **1820***c* is used to transfer configuration and/or parameter information as illustrated in FIGS. **16** and **17**.

According to an embodiment, multiplexer **1830** may perform bandwidth-concentrating operations between buffer interface **1103***a* and interface **1820***b* as well as route data from an appropriate source (i.e. target a subset of data from memory devices, internal data, cache or write buffer). The concept of bandwidth concentration involves combining the (smaller) bandwidth of each data path coupled to a memory device in a multiple data signal path embodiment to match the (higher) overall bandwidth utilized by buffer interface **1103***a*. In an embodiment, multiplexing and demultiplexing of throughput between the multiple signal paths that may be coupled to interface **1820***b* and buffer interface **1103***a* is used. In an embodiment, buffer **101***a* utilizes the combined bandwidth of multiple data paths coupled to interface **1820***b* to match the bandwidth of interface buffer interface **1103***a*.

In an embodiment, data cache and tags circuit **1860** (or cache **1860**) may improve memory access time by providing storage of most frequently referenced data and associated tag addresses with lower access latency characteristics than those of the plurality of memory devices. In an embodiment, cache **1860** includes a write buffer that may improve interfacing efficiency by utilizing available data transport windows over an external signal path to receive write data and address/mask information. Once received, this information is temporarily stored in a write buffer until it is ready to be transferred to at least one memory device over interface **1820***b*.

Computations circuit **1865** may include a processor or controller unit, a compression/decompression engine, etc., to further enhance the performance and/or functionality of buffer **100***a*. In an embodiment, computations circuit **1865** controls the transfer of control/address/clock information and data between buffer interface **1103***a* and interfaces **1820***a-c*.

Clock circuit **1870** may include a clock generator circuit (e.g., Direct Rambus® Clock Generator), which may be incorporated onto buffer **101***a* and thus may eliminate the need for a separate clock generating device.

In an alternate embodiment, clock circuit **1870** include clock alignment circuits for phase or delay adjusting an internal clock signal with respect to an external clock signal, such as a phase lock loop ("PLL") circuit or delay lock loop ("DLL") circuit. Clock alignment circuits may utilize an external clock from an existing clock generator, or an internal clock generator to provide an internal clock, to generate internal synchronizing clock signals having a predetermined temporal relationship with received and transmitted data and/or control information.

In an embodiment, clock circuit **1870** receives a first clock signal having a first frequency via signal path **121** and generates a second clock signal (via interface **1820***a*) to memory device **101***a* using the first clock signal and also generates a third clock signal (via interface **1820***a*) to memory device **101***b* using the first clock signal. In an embodiment, the second and third clock signals have a predetermined temporal (phase or delay) relationship with the first clock signal.

In an embodiment, a transmit circuit (such as in transceivers **1875**, **1896** and **1894** shown in FIG. **18**) transmits a differential signal that includes encoded clock information and a receiver circuit (such as in transceiver **1875**, **1896** and **1894**) receives a differential signal that includes encoded clock information. In this embodiment, a clock and data recovery circuit (such as clock circuit **1870**) is included to

extract the clock information encoded with the data received by the receiver circuit. Likewise, clock information may be encoded with data transmitted by the transmit circuit. For example, clock information may be encoded onto a data signal, by ensuring that a minimum number of signal transitions occur in a given number of data bits.

In an embodiment, a transceiver **1875** transmits and receives a first type of signal (for example, a signal having specified voltage levels and timing), while transceivers **1894** (and/or transmit circuit **1893**) transmits and receives a second different type of signal. For example, transceiver **1875** may transmit and receive signals for a DDR2 memory device and transceivers **1894** may transmit and receive signals for a DDR3 memory device.

In an embodiment, the control information and/or data that is provided to buffer **100***a* (by way of signal paths **121** and **120**) may be in a different protocol format or have different protocol features than the control information and/or data provided to one or more memory devices **100***a-d* from buffer **100***a*. Logic (for example computation circuit **1865**) in buffer **100***a* performs this protocol translation between the control information and/or data received and transmitted. A combination of the different electrical/signaling and control/data protocol constitute an interface standard in an embodiment. Buffer **100***a* can function as a translator between different interface standards—one for the memory module interface (for example connector interface **920**) and another for one or more memory devices **100***a-d*. For example, one memory module interface standard may require reading a particular register in a particular memory device disposed on the memory module. Yet, a memory module may be populated with memory devices that do not include the register required by the memory module interface standard. In an embodiment, buffer **100***a* may emulate the register required by the memory module interface standard and thus allow for the use of memory devices **100***a-d* that operate under a different interface standard. This buffer functionality, combined with the module topology and architecture, enables a memory module to be socket compatible with one interface standard, while using memory devices with a different interface standard.

In an embodiment, buffer **100***a* includes a redundancy and repair circuit **1883** to test and repair the functionality of memory cells, rows or banks of a memory device, entire memory devices (or periphery circuits) and/or signal paths between buffer **100***a* and memory devices **101***a-d*. In an embodiment, redundancy and repair circuit **1883** periodically, during a calibration operation and/or during initialization, tests one or more of memory devices **101***a-d* by writing a predetermined plurality of values to a storage location in a selected memory device (for example, using transceiver **1894** and a look-up table storing the predetermined values) using a selected data path and then reading back the stored predetermined plurality of values from the selected memory device using the selected data path. In an embodiment, when the values read from the storage location of the selected memory device do not match the values written to the storage location, redundancy and repair circuit **1883** eliminates access by buffer **100***a* to the selected memory device and/or selected signal path. In an embodiment, a different signal path to a different memory device may be selected and this testing function may be performed again. If selecting the different signal path results in an accurate comparison of read predetermined values to the predetermined values in redundancy and repair circuit **1883** (or a pass of the test), the different memory address to a different memory location, within or to another memory device, is selected or mapped thereafter. Accordingly, future write and/or read operations to the defective memory location will not occur.

In an embodiment, any multiplexed combination of control information (including address information) and data intended for memory devices **101***a-d* coupled with buffer **100***a* is received via buffer interface **1103***a*, which may, for example extract the address and control information from the data. For example, control information and address information may be decoded and separated from multiplexed data on signal path **120***a* and provided on signal path **1895** to request and address logic circuit **1840** from buffer interface **1103***a*. The data may then be provided to configurable serialization/deserialization circuit **1891**. Request and address logic circuit **1840** generates one or more control signals to transmitter circuit **1893**.

Interfaces **1820***a* and **1820***b* include programmable features in embodiments. A number of control signal lines and/or data signal lines between buffer **100***a* and memory devices **101***a-d* are programmable in order to accommodate different numbers of memory devices. Thus, more dedicated control signal lines are available with an increased number of memory devices. Using programmable dedicated control lines and/or data lines avoids any possible load issues that may occur when using a bus to transfer control signals between memory devices and a buffer **100***a*. In another embodiment, additional data strobe signals for each byte of each memory device may be programmed at interface **1820***b* to accommodate different types of memory devices, such as legacy memory devices that require such a signal. In still a further embodiment, interfaces **1820***a* and **1820***b* are programmable to access different memory device widths. For example, interfaces **1820***a* and **1820***b* may be programmed to connect to 16 "×4" width memory devices, 8 "×8" width memory devices or 4 "×16" width memory devices. Likewise, buffer interface **1103***a* has a programmable width for signal path **120***a*.

Configurable serialization/deserialization circuit **1891** performs serialization and deserialization functions depending upon a stored serialization ratio. As a memory device access width is reduced from its maximum value, memory device access granularity (measured in quanta of data) is commensurately reduced, and an access interleaving or multiplexing scheme may be employed to ensure that all storage locations within memory devices **101***a-d* can be accessed. The number of signal paths **1006** may be increased or decreased as the memory device access width changes. Signal path **1006** may be subdivided into several addressable subsets. The address of the transaction will determine which target subset of signal path **1006** will be utilized for the data transfer portion of the transaction. In addition, the number of transceiver, transmitter and/or receiver circuits included in interfaces **1820***a* and **1820***b* that are employed to communicate with one or more memory devices **101***a-d* may be configured based on the desired serialization ratio. Typically, configuration of the transceivers may be effectuated by enabling or disabling how many transceivers are active in a given transfer between one or more memory devices **101***a-d* and buffer interface **1103***a*. In an embodiment, a data rate of transferring data at buffer interface **1103***a* is a multiple or ratio of a data rate of transferring data on one or more signal paths **1006** coupled to memory devices **101***a-d*.

Buffer **100***a* provides a high degree of system flexibility. New interface standards of memory devices may be phased in to operate with a master or a memory system that supports older interface standards by modifying buffer **100***a*. In an embodiment, a memory module may be inserted using an older memory module interface or socket, while newer

generation memory devices may be disposed on the memory module. Backward compatibility with existing generations of memory devices may be preserved. Similarly, new generations of masters, or controllers, may be phased in which exploit features of new generations of memory devices while retaining backward compatibility with existing generations of memory devices. Similarly, different types of memory devices that have different costs, power requirements and access times may be included in a single common package for specific applications.

FIG. **19** illustrates an integrated circuit memory device **1900** (or a memory die) in an embodiment. Integrated circuit memory device **1900** corresponds to one or more integrated circuit memory devices **101***a-d* in embodiments. Integrated circuit memory device **1900** includes a memory core **1900***b* and a memory interface **1900***a*. Signal paths **1950***a-b*, **1951***a-b*, **1952** and **1953** are coupled to memory interface **1900***a*. Signal paths **1950***a-b* transfer read and write data. Signal paths **1951***a-b* transfer address information, such as a row address and a column address in packets, respectively. Signal path **1952** transfers control information. Signal path **1953** transfers one or more clock signals. In an embodiment, signal paths **1950***a-b* correspond to signal path **120***a* shown in FIG. **10** and signal paths **1951***a-b*, **1952** and **1953** correspond to signal path **121** in FIG. **10**.

Memory interface **1900***a* includes at least one transmitter and/or receiver for transferring signals between memory device **1900** and signal paths **1950***a-b*, **1951***a-b*, **1952** and **1953**. Write demultiplexer ("demux") **1920** and read multiplexer ("mux") **1922** are coupled to signal path **1950***a*, while write demux **1921** and read mux **1923** are coupled to signal path **1950***b*. Write demux **1920-21** provide write data from signal paths **1950***a-b* to memory core **1900***b* (in particular sense amplifiers 0-2a and 0-2b). Read mux **1922-23** provide read data from memory core **1900***b* to signal paths **1950***a-b* (in particular sense amplifiers Na and Nb).

Demux and row packet decoder **1910** is coupled to signal path **1951***a* and Demux and column packet decoder **1913** is coupled to signal path **1951***b*. Demux and row packet decoder **1910** decodes a packet and provides a row address to row decoder **1914**. Demux and Column packet decoder **1913** provides a column address and mask information to column and mask decoder **1915**.

Control registers **1911** are coupled to signal path **1952** and provide control signals to row decoder **1914** and column and mask decoder **1915** in response to register values.

A clock circuit is coupled to signal path **1953** to provide a transmit clock signal TCLK and a receive clock signal RCLK in response to one or more clock signals transferred on signal path **1953**. In an embodiment, write demux **1920** and **1921** provide write data from signal paths **1950***a-b* to memory core **1900***b* in response to an edge of receive clock signal RCLK. In an embodiment, read mux **1922** and **1923** provide read data from memory core **1900***b* to signal paths **1950***a-b* in response to an edge of a transmit clock signal TCLK. In an embodiment, the clock circuit generates a clock signal on signal path **1953** (to a buffer device) that has a temporal relationship with read data that are output on signal paths **1950***a-b*.

Row decoder **1914** and column and mask decoder **1915** provide control signals to memory core **1900***b*. For example, data stored in a plurality of storage cells in a memory bank is sensed using sense amplifiers in response to a row command. A row to be sensed is identified by a row address provided to row decoder **1914** from demux and row packet decoder **1910**. A subset of the data sensed by a sense amplifier is selected in response to a column address (and possible mask information) provided by demux and column packet decoder **1913**.

A memory bank in memory banks 0-N of memory core **1900***b* includes a memory array having a two dimensional array of storage cells. In embodiments, memory banks 0-N include storage cells that may be DRAM cells, SRAM cells, FLASH cells, ferroelectric RAM ("FRAM") cells, magnetoresistive or magnetic RAM ("MRAM") cells, or other equivalent types of memory storage cells. In an embodiment, integrated circuit memory device **1900** is a DDR integrated circuit memory device or later generation memory device (e.g., DDR2 or DDR3). In an alternate embodiment, integrated circuit memory device **1900** is an XDR™ DRAM integrated circuit memory device or Direct Rambus® DRAM ("DRDRAM") memory device. In an embodiment, integrated circuit memory device **1900** includes different types of memory devices having different types of storage cells housed in a common package.

FIGS. **20**A-B illustrate signal paths between memory module interface portions and a plurality of integrated circuit buffer devices. In particular, FIG. **20**A illustrates how each buffer device **100***a-d* has signal paths for data signals coupled to each connector interface portion **920***a-h*. In an embodiment, FIGS. **20**A-B illustrate signal paths between buffer devices and connector interfaces of memory module **900** that include a plurality of memory devices as shown in FIGS. **9**A-C. For example, FIG. **20**B which shows an expanded section of FIG. **20**A, illustrates how data signal paths **2003** and **2004** provide data signals between connector interface portions **920***a* and **920***e* and buffer device **100***a*. FIG. **20**A also illustrates how signal paths for control/address signals, such as control/address signal paths **2001** and **2002**, couple connector interface portions **930***a* and **930***b* to buffer devices **100***a-d*. In an embodiment, each signal path **2001** and **2002** is a multi-drop bus as shown in FIG. **1**.

FIGS. **21**A-D illustrate memory system point-to-point topologies including a master **2101** and at least one memory module having a plurality of integrated circuit memory devices (The plurality of memory devices on respective memory modules are not illustrated in FIGS. **21**A-D, **22**A-C, **23**A-C and **24**A-B for clarity). In an embodiment, FIGS. **21**A-D, **22**A-C, **23**A-C and **24**A-B illustrate signal paths between memory modules, such as memory module **900** as shown in FIGS. **9**A-C, and other memory modules and/or masters. FIGS. **21**A-D illustrate expanding memory capacity and bandwidth as well as different configurations. In particular, master **2101** is coupled to interfaces (such as sockets) **2102** and **2103** by signal paths **2120**, **2121***a-b*, **2122** and **2123** in Dynamic Point-to-Point ("DPP") system **2100***a*. In an embodiment, master **2101**, interfaces **2102** and **2103** as well as signal paths **2120**, **2121***a-b*, **2122** and **2123** are disposed on a substrate, such as a printed circuit board ("PCB"). In an embodiment, memory modules may be inserted and/or removed (unpopulated) from interfaces **2102** and **2103**. In an embodiment, signal paths **2120**, **2121***a-b*, **2122** and **2123** are signal traces on a PCB. In an embodiment, signal paths **2120** and **2121***a-b* provide data between data signal paths on a memory module, such as signal paths **120***a* and **120***b* shown in FIG. **1**, and master **2101**. In an embodiment, signal paths **2122** and **2123** provide control/address information to the memory modules (via interfaces **2102** and **2103** and in particular connector interface portions **930***b* of the memory modules) from master **2101**. In particular, control/address information is provided from signal

paths **2122** and **2123** to a signal path on the memory modules, such as signal path **121** shown in FIG. **1**.

FIG. **21**A illustrates a DPP system **2100***a* that simultaneously accesses two buffer devices in memory modules coupled to interfaces **2102** and **2103**. In response to control and address information provided on signal paths **2122** and **2123** from master **2101**, the two buffers **101***a* output data simultaneously from connector interface portions **920***a* and **920***e*, respectively, onto signal paths **2120** and **2121***a*, that are coupled to master **2101**. In an embodiment, signal paths **2120** and **2121***a* are point-to-point links. In an embodiment, a point-to-point link includes one or a plurality of signal lines, each signal line generally having two transceiver connection points, each transceiver connection point coupled to a transmitter circuit, receiver circuit or transceiver circuit. For example, a point-to-point link may include a transmitter circuit coupled at or near one end and a receiver circuit coupled at or near the other end. The point-to-point link may be synonymous and interchangeable with a point-to-point connection or a point-to-point coupling.

In an embodiment, the number of transceiver points along a signal line may distinguish between a point-to-point link and a bus. For example, a point-to-point link generally includes only two transceiver connection points while a bus generally includes more than two transceiver points. In some instances a point to point link can be mixed with bussed signal lines, where the bussed single lines may be used to provide sideband functionality such as maintenance, initialization or test.

Several embodiments of point-to-point links include a plurality of link topologies, signaling, clocking and signal path types. Embodiments having different link architectures include simultaneous bi-directional links, time-multiplexed bi-directional links and multiple unidirectional links. Voltage or current mode signaling may be employed in any of these link topologies.

FIG. **21**B illustrates a DPP with Continuity Module system **2100***b* for accessing a buffer device **101***a* in a memory module coupled to interface **2103** while a continuity memory module **2105** is coupled to interface **2102**. In an embodiment, master **2101** outputs a single set of control/address information on signal paths **2122** and **2123**. Data is output from connector interfaces **920***a* and **920***e* of the memory module coupled to interface **2103** in response to the single set of control/address information. Data is provided to master **2101** on signal path **2120** via signal path **2121***b* and a bypass circuit in continuity memory module **2105**. The bypass circuit passes the data from connector interface portion **920***e* to connector interface portion **920***a* in continuity memory module **2105**. Data is also provided to master **2101** by signal path **2121***a*.

FIG. **21**C illustrates a DPP bypass system **2100***c* similar to system **2100***b* except that a buffer device **101***a* (rather than continuity memory module **2105**) in a memory module includes a bypass circuit for passing the data from connector interface portion **920***e* to connector interface portion **920***a* of the memory module inserted in interface **2102**.

FIG. **21**D illustrates a DPP bypass system **2100***d* similar to system **2100***c* except that data is accessed from buffer device **101***a* of the memory module coupled to interface **2102** and buffer device **101***a* of the memory module coupled to interface **2103** includes a bypass circuit for passing the data from connector interface portion **920***a* to connector interface portion **920***e*.

In an embodiment, a clock signal or clock information is provided on signal paths **2122** and **2123**, on a separate signal path from a clock source or master **2101**, or along the data signal paths **2121***a-b*.

FIGS. **22**A-C illustrate memory system daisy chain topologies including a master **2101** and at least one memory module having a plurality of integrated circuit memory devices. In particular, FIGS. **22**A-C illustrate how half of the bandwidth, as compared to system **2100***a-d*, is obtained when accessing a single memory module in an embodiment. FIG. **22**A illustrates a Daisy Chain system **2200***a* that includes a buffer **101***a* in a memory module coupled to interface **2103** that provides data (by way of connector interface portion **920***e*) on signal path **2121***a* in response to a single set of control/address information output by master **2101** onto signal paths **2122** and **2123**. No module is coupled to interface **2102**.

FIG. **22**B illustrates a Daisy Chain system **2200***b* that is similar to system **2200***a* except a memory module is coupled to interface **2102**.

FIG. **22**C illustrates a Daisy Chain system **2200***c* similar to system **2200***b* except that data accessed from a buffer device **101***a* in a memory module is coupled to interface **2102** rather than interface **2103**. Buffer device **101***a* in a memory module coupled to interface **2103** provides a bypass circuit to allow data to be received at interface portion **920***a* and output at interface portion **920***e* of the memory module coupled to interface **2103**. Data is thus passed from data path **2121***b* to data path **2121***a* and ultimately to master **2101**.

FIGS. **23**A-C and **24**A-B illustrate memory system topologies including a master to provide control/address information to a plurality of integrated circuit buffer devices. In particular, FIG. **23**A illustrates a Dedicated/Fly-by system **2300***a* that includes a master **2101** that provides control/address information to memory modules **2301***a* and **2301***b* (in particular to integrated circuit buffer devices **101***a-d* on each memory module) by signal paths **2311** and **2310**, respectively. In an embodiment, signal paths **2310** and **2311** are separate and carry control/address information for each respective memory module. In an embodiment, signal path **2311** does not pass through or include a signal path in memory module **2301***b*. In an embodiment, signal path **2311** does not pass through or include an interface, such as a socket, used for memory module **2301***b*. The double headed arrow in FIGS. **23**A-C, **24**A-B and **25**A-B illustrate the data information (read and write data) transferred on separate data paths between memory modules **2301***a-b* (and in particular from buffer devices) and master **2101**. In an embodiment, a clock signal or clock information is provided on signal paths **2310** and **2311**, on a separate signal path from a clock source or master **2101**, or along the data signal paths.

Signal path **2311** is terminated by termination **2350***a* and signal path **2310** is terminated by termination **2350***b*. In an embodiment, the impedance of termination **2350***a* matches the impedance of a portion of the signal path **2311** (multi-drop bus **2320***a*) on memory module **2310***a*, (Z0) and the impedance of termination **2350***b* approximately matches the impedance of a portion of the signal path **2310** (multi-drip bus **2320***b*) on memory module **2301***b* (Z1). In an embodiment, impedance Z0 approximately equals impedance Z1. In embodiments, terminations **2350***a* and **2350***b*, singly or in combination, are disposed on memory module, buffer devices or packages used to house buffer devices. FIG. **23**B illustrates a Stub/Fly-by system **2300***b* similar to system **2300***a* except that a single signal path **2320** provides control/address information from master **2101** to memory modules **2301***a* and **2301***b* (in particular to integrated circuit buffer

devices **101***a-d* on each memory module). In an embodiment, memory modules **2301***a* and **2301***b* include stubs/internal signal paths (multi-drop bus) **2320***a-b* coupled to a single common signal path **2320** that are disposed on memory modules **2301***a-b*. In an embodiment, a portion of signal path **2320** passes through or includes an interface, such as a socket, used for memory module **2301***b*. Memory modules **2301***a* and **2301***b* are terminated similar to system **2300***a*.

FIG. **23**C illustrates a Serpentine system **2300***c* similar to system **2300***a* except that a single signal path **2320** provides control/address information from master **2101** to memory modules **2301***a* and **2301***b* (in particular to integrated circuit buffer devices **101***a-d* on each memory module) without using stubs on respective memory modules as illustrated in FIG. **23**B. In an embodiment, a single signal path **2330** couples master **2101** to memory modules **2301***a* and **2301***b*. In an embodiment signal path **2330** includes a first external signal path portion between master **2101** and memory module **2301***b*; a second signal path portion disposed on the memory module **2301***b* and coupled to the first signal path portion as well as to respective buffer devices **101***a-d*; a third external signal path portion **2331** coupled to the second signal path portion and also coupled to memory module **2301***a*; and a fourth signal path portion disposed on the memory module **2301***a* and coupled to the third signal path portion **2331** as well as to respective buffer devices **101***a-d* on memory module **2301***a*. Termination **2350***a*, in an embodiment, is not disposed on memory module **2301***a* in order to ensure that memory modules are interchangeable. Termination **2350***a* may be disposed on a PCB or elsewhere in a system.

FIG. **24**A illustrates a Dedicated/Tree system **2400***a* similar to system **2300***a* except that memory modules **2401***a-b* include buffer devices **101***a-d* that are coupled by way of a tree structure/topology signal path **2413**. A tree structure/topology may also be referred to as a "forked," "T" or "hybrid T" topology. In particular, memory module **2401***a* is coupled to signal path **2311** by signal path **2413***a* disposed on memory module **2401***a* that then branches in to signal paths **2413***b* and **2413***c*. Signal path **2413***b* then is coupled to buffer devices **101***a* and **101***b* by branches or signal paths **2413***d* and **2413***e*. Signal path **2413***c*, likewise, is coupled to buffer devices **101***c* and **101***d* by branches or signal paths **2413***f* and **2413***g*. In an embodiment, memory module **2401***b* has a similar tree structure signal path **2413** to couple buffer devices **101***a-d* to signal path **2310**.

FIG. **24**B illustrates a Stub/Tree system **2400***b* similar to system **2400***a* shown in FIG. **24**A that includes tree structure signal path **2413** in memory modules **2401***a-b*. System **2400***b* illustrates signal path **2320** including stubs/signal paths **2320***a* and **2320***b* that couple master **2101** to memory modules **2401***a* and **2401***b*, respectively. Stub/signal path **2320***a* is coupled to signal path **2413***a* disposed on memory module **2401***a* and stub/signal path **2320***b* is coupled to signal path **2413***a* disposed on memory module **2401***b*.

In embodiments, termination may be disposed on buffers **101***a-d*, memory modules **2401***a-b* and/or elsewhere in a system, such as on a PCB.

FIGS. **25**A-B illustrate memory modules having different memory capacity or different sized address spaces. In particular, memory module address space **2501** on a first memory module is larger than memory module address space **2502** on a second memory module. In an embodiment, memory module address space **2501** is twice as large as memory module address space **2502**. For example, memory module address space **2501** may store 2 gigabyte (GB) of information and memory module address space **2502** may store 1 GB of information. Increasing the number or density of integrated circuit memory devices disposed on a memory module may increase address space.

FIG. **25**A illustrates how half (or portion) of the available signal path width, for example half of a bus width, is used to access the first half of memory module address space **2501** (overlapping address space) while the other half of the available signal path width is used to access memory module address space **2502**.

FIG. **25**B illustrates how a larger capacity memory module is able to use a full signal path by accessing a first half (or portion) of the available signal path width coupled directly to the larger capacity memory module and by way of accessing a second half (or portion) of the available signal path width coupled to the smaller capacity memory module using bypassing through the smaller capacity memory module. FIGS. **26-29** illustrate how non-overlap address space of a larger memory module may be accessed in various embodiments.

FIGS. **26**A-B illustrate a system **2600** to access different sized/capacity (address space) memory modules during different modes of operation, a first mode of operation and a second mode of operation (or bypass mode). System **2600** includes a master **2101** coupled to memory module **2601** by signal path **2610** and memory module **2602** by signal path **2612**. Memory modules **2601** and **2602** are coupled by signal path **2611**. In an embodiment, memory modules **2601** and **2602** represent memory modules including integrated circuit memory devices and buffer devices as described herein. In an embodiment, memory module **2601** has a larger address space than memory module **2602**. In an embodiment, signal paths **2610-2612** are point-to-point links that provide read/write data. In embodiments, control/address/clock information is provided on separate signal paths as described herein. Memory modules **2601** and **2602** may include bypass circuits **2630***a-b*.

In a first mode of operation (or a non-bypass mode) illustrated in FIG. **26**A, read data **2601***a* (stored in an overlapping address space) is provided on signal path **2610** to master **2101** from memory module **2601** in response to control/address information provided by master **2101** to memory module **2601**. Similarly, read data **2602***a* (stored in an overlapping address space) is provided on signal path **2612** to master **2101** from memory module **2602** in response to control/address information provided by master **2101** to memory module **2602**. In the first mode of operation, signal path **2611** is not used.

In a second mode of operation (or a bypass mode) illustrated in FIG. **26**B, read data **2601***b* (stored in a non-overlapping address space of memory module **2601**) is provided on signal path **2610** to master **2101** from memory module **2601** in response to control/address information provided by master **2101** to memory module **2601**. Read data **2601***c* (stored in a non-overlapping address space of memory module **2601**) is provided on signal path **2611** to memory module **2602** in response to control/address information provided by master **2101** to memory module **2601**. Bypass circuit **2630***b* then provides read data **2601***c* to signal path **2612** and eventually to master **2101**.

Write data from master **2101** may be provided to memory modules **2601** and **2602** similar to how read data is obtained during a first and second mode of operation.

In embodiments, modes of operation are determined in response to a control signal from master **2101**, or other circuit or in response to reading configuration information stored in a separate storage circuit in a device, such as an

SPD device or register on the buffer or controller device, disposed on system **2600**. Modes of operation may be determined at initialization, periodically or during calibration of system **2600**.

In embodiments, bypass circuits **2630***a-b* (as well as bypass circuits **2630***c-d* shown in FIG. **27**) correspond to bypass circuit **2900** as described below and shown in FIG. **29** and/or bypass circuit **1898** shown in FIG. **18**. In embodiments, these bypass circuits can be incorporated on the buffer devices on the module.

FIG. **27** illustrates a system **2700** including master **2101** coupled to at least four memory modules **2701-2704** by way of interfaces **2701***a-d*. In an embodiment, interfaces **2701***a-d* are female sockets disposed on a substrate, such as a backplane, motherboard or PCB, to receive male edge interfaces of memory modules **2701-2704**. In an embodiment, memory modules **2701-2704** represent memory modules including integrated circuit memory devices and buffer devices as described herein as well as at least one of bypass circuits **2630***a-d*.

Master **2101** is coupled to memory module **2701** by signal path **2710**. Signal path **2711** couples memory module **2701** to memory module **2704**. In an embodiment, bypass circuit **2630***a* allows read and write data to be transferred between signal paths **2711** and **2710** either to or from master device **2101** in response to control/address information provided to memory module **2704**.

Master **2101** is coupled to memory module **2702** by signal path **2712**. Signal path **2713** couples memory module **2702** to memory module **2703**. Signal path **2714** couples memory module **2703** to memory module **2704**. In an embodiment, bypass circuits **2630***b* and **2630***c* allow read and write data to be transferred between signal paths **2712** and **2713**, as well as signal paths **2713** and **2714**, either to or from master device **2101** in response to control/address information provided to memory modules **2702-04**.

Master **2101** is coupled to memory module **2703** by signal path **2714**. Signal path **2716** couples memory module **2703** to memory module **2704**. In an embodiment, bypass circuit **2630***c* allows read and write data to be transferred between signal paths **2714** and **2716** either to or from master device **2101** in response to control/address information provided to memory modules **2703-04**.

Master **2101** is coupled to memory module **2704** by signal path **2717**. In an embodiment, read and write data is transferred on signal path **2717** to or from master device **2101** in response to control/address information provided to memory module **2704**.

FIGS. **28**A-B illustrate a system **2700** to access different capacity/sized (address space) memory modules during different modes of operation that is similar in operation to that of system **2600**. FIG. **28**A illustrates accessing data in a first mode of operation, such as accessing read data from different sized memory modules that may be disposed in interfaces **2701***a-d*. Table **2810** illustrates how different sized memory modules may be disposed in respective interfaces **2701***a-d* during a first mode of operation. For example, interfaces **2701***a-d* may be coupled to all "small" sized memory modules as indicated by the first row of Table **2810**. Alternatively, interface **2701***a* may be coupled to a "large" sized memory module; interface **2701***b* may be coupled to a "small" sized memory module; interface **2701***c* may be coupled to a "large" sized memory module; and interface **2701***d* may be coupled to a "small" sized memory module, as indicated by the second from last row of Table **2810**.

In a first mode of operation (non-bypass mode) as illustrated by FIG. **28**A, data **2810***a* is provided on signal path **2717**; data **2820***a* is provided on signal path **2714**; data **2830** is provided on signal path **2712**; and data **2840** is provided on signal path **2710**.

Table **2820** illustrates how different sized memory modules may be disposed in respective interfaces **2701***a-d* during a second mode of operation (bypass mode). For example, interfaces **2701***c-d* may be coupled to "small" sized memory modules and interfaces **2701***a-b* include bypass circuits **2802** and **2801** as indicated by the first row of Table **2820**. Alternatively, interface **2701***c* may be coupled to a "large" sized memory module; and interface **2701***d* may be coupled to a "small" sized memory module. Interfaces **2701***a-b* include bypass circuits **2802** and **2801**, as indicated by Table **2820**.

In a second mode of operation (bypass mode) as illustrated by FIG. **28**B, read data **2810***b* is provided on signal path **2717** and read data **2810***c* is provided on signal paths **2711** and **2710** (via bypass circuit **2802**). Read data **2820***b* is provided on signal path **2714** and read data **2820***c* is provided on signal paths **2713** and **2712** (via bypass circuit **2801**).

In embodiments, bypass circuits **2801** and/or **2802** are disposed in a continuity module, integrated circuit buffer device, interface (for example a socket) and/or memory module. In an embodiment, bypass circuits **2801** and **2802** are conductive elements, such as metal traces or wires that may be disposed manually on an interface or memory module. In an embodiment, bypass circuits **2801** and **2802** correspond to bypass circuit **2900** shown in FIG. **29**.

FIG. **29** illustrates a bypass circuit **2900** used in a write operation according to an embodiment. Bypass circuit **2900** includes receiver and transmitter circuits **2901***a-e* and **2902***a-d* coupled to a signal path including signal paths DQ[0:3] and RQ. In an embodiment, bypass circuit **2900** is included in an integrated circuit buffer device, such as corresponding to bypass circuit **1898** in buffer interface **1103***a*, disposed on a memory module and/or corresponding to bypass circuits **2630***a-d* shown in FIGS. **26**A-B and **27**. For example, signal paths DQ[0:1] are coupled to connector interface portion **920***a* and signal paths DQ[2:3] are coupled to connector interface portion **920***b* as shown in FIGS. **20**A-B. In an embodiment, signal paths DQ[0:1] are coupled to an adjacent master or memory module and signal paths DQ[2:3] are coupled to a memory module in a memory system.

Receiver circuits **2901***a-d* receive write data signals from signal paths DQ[0:3] and provide write data to data width translator circuit **2950** and/or back out to a signal path by way of transmitters **2902***a-d* and bypass elements **2905-2910**. Receiver circuit **2901***e* receives write address signals from signal path RQ and provides write addresses to data width translator circuit **2950**. Receiver circuit **2901***a* is coupled to bypass elements **2906** and **2908** to reroute received data signals to transmitter circuits **2902***b* and **2902***c* in response to control signals (not shown) provided to bypass elements **2906** and **2908**. Receiver circuit **2901***b* is coupled to bypass elements **2905** and **2910** to reroute received data signals to transmitter circuits **2902***a* and **2902***d* in response to control signals (not shown) provided to bypass elements **2905** and **2910**. Receiver circuit **2901***c* is coupled to bypass element **2907** to reroute received data signals to transmitter circuit **2902***a* in response to control signals (not shown) provided to bypass element **2907**. Receiver circuit **2901***d* is coupled to bypass element **2909** to reroute received data signals to transmitter circuit **2902***b* in response to control signals (not shown) provided to bypass element **2909**.

As can be seen, write data may be rerouted from a single signal path DQ**0** to another single signal path DQ**1**. Write data may be also rerouted from two signal paths DQ**0** and DQ**1** to signal paths DQ**2** and DQ**3**.

In an embodiment, bypass elements **2905-2910** function independently as respective switches to allow a signal (represented by a voltage level) to be passed from a receiver circuit to a transmitter circuit. In an embodiment, bypass elements **2905-2910** are semiconductors such as negative and/or positive-channel metal-oxide (NMOS/PMOS) semiconductors with a control signal (such as a voltage) provided to a gate of the semiconductor while a source and/or a drain is coupled to a transmitter and/or receiver circuit. In an alternate embodiment, other types of semiconductors or switches may be used. In an embodiment, control signals (not shown) provided to bypass elements **2905-2910** are provided by master **2101** or from a programmable register, such as an SPD device. In an embodiment, control signals are provided by a master after reading memory capacity information of memory modules stored in one or more SPD devices. In an embodiment, control signals provided to bypass elements may be provided in response to a manual jumper, programmable fuse or register. In an embodiment, control signals provided to bypass elements may be provided by one or more integrated circuit buffer devices in response to one or more integrated circuit buffer devices reading a received address/control information. For example, when an address is received that identifies a memory location that is not provided on a particular memory module (non-overlapping address space or smaller capacity memory module), control signals are provided to bypass elements from the integrated circuit buffer device that received the address/control information (in a bypass mode) to enable data to be rerouted from the larger capacity memory module to another destination, such as a master.

In an embodiment, bypass elements **2905-2910** may be disposed before or left of receiver and transmitter circuits **2901***a-d* and **2902***a-d* as well as in or after (right of) data width translator circuit **2950** (for example, after a clock barrier or boundary). Bypass elements **2905-2910** may be disposed in a master, an interface (such as a socket) and/or a memory module (outside of a buffer device). Bypass elements **2905-2910** may also be disposed internal to an integrated circuit buffer, as opposed to an interface of an integrated circuit buffer device, or in an integrated circuit memory device.

In an embodiment, rerouted write data may be resynchronized by a transmitter circuit using a different or the same clock signal that is used by the receiver circuit in receiving the read data. Also, write data that has been rerouted by bypass elements may be transmitted in a fast analog mode.

Stored read data from integrated circuit memory devices disposed on a memory module are provided on signal paths DQ_DRV[0:3] by way of an integrated circuit buffer device. Read data is levelized or delays are provided to the read data by a selector circuit, such as multiplexers (mux) **2903***a-d*, and delay circuits **2904***a-d* in response to DELAY[0:3] control signals. Signal paths DQ_DRV[0:3] are input to delay circuits **2904***a-d* and a first input ("0 input") of mux **2903***a-d*, while an output of delay circuits **2904***a-d* is provided to a second input ("1 input") of mux **2903***a-d*. DELAY[0:3] control signals select an output of mux **2903***a-d* or whether a delay is introduced into read data on signal paths DQ_DRV[0:3]. In an embodiment, delay circuits **2904***a-d* may introduce a programmable delay in response to a control signal (not shown). Control signals provided to delay circuits **2904***a-d* as well as DELAY[0:3] control signals may be provided similar to control signals provided to bypass elements **2905-2910** as described above.

In an embodiment, delay circuits **2904***a-d* are inverters, registers and/or a series of inverters and/or registers that may introduce programmable delay to a read signal on signal paths DQ_DRV[0:3]. The amount of delay provided to read data by delay circuits **2904***a-d* may be longer than the amount of time for providing read data to delay circuits **2904***a-d*, or longer than a data cycle time.

In an embodiment, multiplexers **2903***a-d* and delay circuits **2904***a-d* may be disposed before or left of receiver and transmitter circuits **2901***a-d* and **2902***a-d*. For example, multiplexers **2903***a-d* and delay circuits **2904***a-d* may be disposed in a master, interface (such as a socket) and/or memory module. In an embodiment, multiplexers **2903***a-d* and delay circuits **2904***a-d* may be disposed in data width translator circuit **2950** and/or left of data width translator circuit **2950**. For example, multiplexers **2903***a-d* and delay circuits **2904***a-d* may be disposed internal to an integrated circuit buffer, as opposed to an interface of an integrated circuit buffer device, or in an integrated circuit memory device.

Levelization or the amount of delay (if any) provided to read data on signal paths DQ_DRV[0:3] is dependent upon the signal path (between a memory module and a master) used by a system to provide the read data to the master (or flight time or amount of time to transfer read data from a memory module to a master and/or another memory module). For example in a system **2600** shown in FIG. **26**B, delay is introduced into data **2601***b* so that data **2601***b* arrives at master **2101** at the approximate same time data **2601***c* arrives at master **2101** because data **2601***c* travels a longer path (as compared to data **2601***b*) on signal paths **2611** and **2612** as well as through memory module **2602** (or at least through an integrated buffer device/interface of memory module **2602**).

Data width translator circuit **2950** may be configurable to translate data of various widths into data suitable for a fixed-width memory die or device disposed on a memory module. Data width translator circuit **2950**, in accordance with some embodiments, uses a data-mask signal to selectively prevent memory accesses to subsets of physical addresses. This data masking divides physical address locations of the memory die into two or more temporal subsets of the physical address locations, effectively increasing the number of uniquely addressable locations in a particular memory die. As used herein, the term "width" refers to the number of bits employed to represent data.

A data width translator circuit **2950** allows memory modules, such as memory modules **2601** and **2602**, to vary the effective width of their external memory module interfaces without varying the width of the internal memory device/die interfaces. A memory system thus may support a first mode of operation and a second mode of operation (bypass mode). In the bypass mode of operation, memory module **2601** uses both signal path **2610** and signal paths **2611** and **2612** (via memory module **2602**).

In accordance with an embodiment, data width translator circuit **2950** can translate data of width one, two, or four on signal paths DQ[0:3] into four-bit-wide data on signal path IDQ[0:3]. Address translator circuit **2970** translates address signals on signal path RQ to signal path IRQ which is coupled to one or more memory devices. This flexibility allows one or a combination of memory modules to be used in an extensible point-to-point memory topology. Similarly,

data width translator circuit **2950** can translate data of width one, two, or four on signal paths IDQ[0:3] into four-bit-wide data on signal path DQ[0:3].

Data width translator circuit **2950** includes a data translator circuit **2960**, an address translator circuit **2970**, and a DLL **2980**. DLL **2980** produces an internal differential clock signal ICLK locked (or having a temporal relationship) to a like-identified incoming differential clock signal CLK, typically from an associated master or a clock-generator device. Though not shown, a memory device disposed on a memory module may receive the same or a similar clock signal CLK from data width translator circuit **2950** or a master. Data translator circuit **2960** and address translator circuit **2970**, responsive to a configuration signal CFG, translate the data on one, two, or four of data signal paths DQ[0:3] into four-bit-wide data on signal paths IDQ[0:3] for write cycles; and conversely translate four-bit-wide data on signal paths IDQ[0:3] into one, two, or four-bit-wide data on one or more of external signal paths DQ[0:3] for read cycles. In one embodiment, plugging a second memory module into a two-connector mother board automatically asserts configuration signal CFG, causing each of two memory modules to configure themselves as half-width (e.g., two bits instead of four) modules. In other embodiments, configuration signal CFG comes from a register on a memory module (e.g., within data width translator circuit **2950**) that is addressable by a master and is set, such as via the BIOS, at boot time. In other embodiments, a configuration signal CFG is provided after reading values stored in a SPD device. In general, an external memory module interface conveys data signals of data-width N, an internal memory device interface conveys signals of data-width M, and configuration signal CFG is indicative of the ratio of N to M. Some embodiments use a PLL instead of DLL **2980**.

A fixed-width memory device disposed on a memory module may include a mask line/signal path or pin that can be used in support of partial-write operations. For example, double data rate "DDR" memory die include a data-mask pin DM and single data rate "SDR" memory die include a data-mask pin DQM. Memory modules detailed herein may employ data-mask functionality to create variable-width modules using fixed-width memory devices. In an embodiment, a data-mask signal DM is output from data translator circuit **2960** to one or more memory devices in order to synchronize write operations. FIGS. **30**A-B, described below, illustrate a write operation using data width translator circuit **2950** in an embodiment.

In an embodiment, bypass circuit **2900** includes bypass elements **2905-2910** and not multiplexers **2903***a-d* and delay circuits **2904***a-d*. In an alternate embodiment, bypass circuit **2900** includes multiplexers **2903***a-d* and delay circuits **2904***a-d* and not bypass elements **2905-2910**. For example, memory module **2601** shown in FIG. **26**B, and in particular bypass circuit **2630***a*, may include multiplexers **2903***a-d* and delay circuits **2904***a-d* to provide a delay to data **2601***a* and not bypass elements **2905-2910**. Conversely, memory module **2602**, and in particular bypass circuit **2630***b*, may include bypass elements **2905-2910** to reroute data **2601***c* but not multiplexers **2903***a-d* and delay circuits **2904***a-d* to provide a delay. In an embodiment, bypass circuit **2900** is disposed in a memory system that does not include an integrated circuit buffer device.

FIGS. **30**A-B illustrate a pair of timing charts **3000** and **3001** depicting the operation of a memory system, or memory module, using data width translator circuit **2950** in a first mode of operation and a second mode of operation (bypass mode). Data to be written to a common address A in a single memory device disposed on a memory module may be transmitted over external signal paths DQ[0:3] as four eight-symbol bursts (a single eight-symbol burst 0A-0H on signal path DQ**0** is shown in FIG. **30**B) and an address A on signal path RQ. For example, signal path DQ**0** conveys eight binary symbols 0A through 0H for storage at physical address location A in a fixed width memory device on the memory module. In embodiments, the three remaining signal paths DQ[1:3] likewise may convey eight symbols for storage at address location A. When all signal paths DQ[0:3] are used, the total number of symbols to be stored at a given address A may be thirty-two (four times eight). Data width translator circuit **2950** may convey the thirty-two symbols and corresponding address A to a memory device via signal paths IDQ[0:3] and IRQ. The burst length can be longer or shorter in other embodiments.

In an embodiment, data width translator circuit **2950** uses mask signal DM to divide the addressed physical locations in a fixed-width memory device into subsets of memory locations addressed separately in the time domain, a process that may be referred to as "time slicing." For example, a most significant bit(s) (MSB(s)), or any other bits in address A, causes data translator circuit **2960** (via a signal from address translator circuit **2970** to data translator circuit **2960**) to assert a mask signal DM (DM=1) to block writes to a first set of locations having address A, and then de-asserts mask signal DM (DM=0) to allow writes to the second set of locations having address A. This process then may repeat.

FIG. **30**A illustrates how data provided from two external signal paths DQ[0:1] is output on signal paths IDQ[0:3] by data width translator circuit **2950** in a bypass mode of operation (i.e. memory modules **2701** and **2702** are bypassed as illustrated in FIGS. **27** and **28**B). In an embodiment, signal path DQ**0** is included in signal path **2717** and signal path DQ**1** is included in signal path **2711**. Data 0A-0H is provided on signal path **2717** from master **2101** while data 1A-1H is also provided by master **2101** on signal path **2711** via memory module **2701** and signal path **2710**.

In an embodiment, the address space in memory module **2704** (i.e. memory devices) is bisected in the time domain. One of the external address bits of address A is employed to assert mask signal DM every other time slot. In this embodiment, the MSB of the external address A is zero, so mask signal DM is deasserted for every time slot MSB=0 to allow writes during those time slots.

FIG. **30**B illustrates how data provided from an external signal path DQ**0** (or signal paths DQ[0:3]) is output on signal paths IDQ[0:3] by data width translator circuit **2950** in a non-bypass mode of operation (i.e. data is provided to each of the memory modules/sockets as illustrated in FIGS. **27** and **28**A). In an embodiment, signal path DQ**0** is included in signal path **2717**. Data 0A-0H is provided on signal path **2717** from master **2101**. Similarly, other data may be provided from master **2101** to memory modules **2701-2703** on signal paths DQ**1**, DQ**2** and DQ**3** that are included in signal paths **2710**, **2712** and **2714**.

FIG. **31** illustrates a method **3100** to adjust read and write data delays in a system including memory modules having different capacity and a bypass circuit. In embodiments, logic blocks illustrated in FIGS. **31** and **40** are carried out by hardware, software or a combination thereof. In embodiments, logic blocks illustrated in FIGS. **31** and **40** illustrate actions or steps. In embodiments, the circuits and/or systems illustrated herein, singly or in combination, carry out the logic blocks illustrated in FIGS. **31** and **40**. Other logic blocks that are not shown may be included in various

embodiments. Similarly, logic blocks that are shown may be excluded in various embodiments. Also, while methods **3100** and **4000** shown in FIGS. **31** and **40** are described in sequential logic blocks, steps or logic blocks of methods **3100** and **4000** are completed very quickly or almost instantaneously.

Method **3100** begins at logic block **3101** where a determination is made whether to levelize or adjust delays to read and write data in a memory system. In an embodiment, this determination may be made at initialization, periodically or during calibration (testing). If levelization is not desired, method **3100** ends. Otherwise, integrated circuit buffer devices are set to a typical or first mode of operation as illustrated by logic block **3102**. In an embodiment, a control signal from a master, such as master **2101** shown in FIG. **26**A-B, generates a control signal to memory modules, and in particular to integrated circuit buffer devices of the memory modules to operate in a first mode of operation which includes providing read and write data on separate signal paths (signal paths **2610** and **2612**) to or from a master as illustrated in FIG. **26**A. In the first mode of operation, no additional delay is provided to read and write data, as compared to the second mode of operation described below.

Logic block **3103** illustrates levelizing read data or providing delays to read data to take into account different flight times or distances the read data must travel on different signal paths in reaching a master. For example, signal path **2612** has a longer signal path than signal path **2610**. Therefore, in order for read data **2601***a* and **2602***a* from both memory modules **2601** and **2602** to reach master **2101** at the approximate same time, a delay should be introduced into the read data **2601***a* to account for the longer flight time or distance of signal path **2612**. In an embodiment, delays are provided in response to delay values stored in registers on the integrated circuit memory devices and programmed by the master. In alternate embodiments, delays corresponding to respective memory modules are provided and programmed in the master. Test symbols or test data may be written and read from the integrated circuit memory devices to determine the programming of the delay values.

A determination is then made whether a memory system includes different capacity memory modules as illustrated by logic block **3104**. If different capacity memory modules are not present, control transitions to logic block **3107**. Otherwise, control transitions to logic block **3105**. In an embodiment, the determination illustrated by logic block **3104** may be completed by a master reading configuration information of a system stored in an SPD.

Integrated circuit buffer devices are then set to a second mode of operation (bypass mode) as illustrated in logic block **3105**. In an embodiment, the bypass mode of operation is set by providing control signals to a bypass circuit in an integrated circuit buffer device, for example bypass elements **2905-2910** in a bypass circuit **2900** as illustrated in FIG. **29**.

Read data from a larger capacity memory module is then levelized as illustrated by logic block **3106**. For example, delays are added to read data **2601***b* of memory module **2601** (larger capacity) as illustrated in FIG. **26**B. In an embodiment, Delay[0:3] control signals are provided to multiplexers **2903***a-d* to select additional delay to data signal on signal path DQ_DRV[0:3] of bypass circuit **2900** shown in FIG. **29**. The delay provided in logic block **3106** is in addition to any delay provided in logic block **3103**.

Integrated circuit buffers in a smaller capacity memory module are set to a first mode of operation (or a non-bypass mode) as illustrated by logic block **3109**. For example, memory module **2602** in FIG. **26**A has an integrated circuit buffer device that is set to a typical mode of operation.

Read data levelization for the smaller capacity memory module is then performed as illustrated by logic block **3108**.

Write data levelization for data written to memory modules is performed in logic block **3107**.

A determination is then made whether a memory system includes different capacity memory modules as illustrated by logic block **3110**. If different capacity memory modules are not present, method **3100** ends. Otherwise, control transitions to logic block **3111**. In an embodiment, the determination illustrated by logic block **3110** may be completed by a master reading configuration information of a system stored in a SPD.

Integrated circuit buffer devices are then set to a second mode of operation (bypass mode) as illustrated in logic block **3111**. In an embodiment, the bypass mode of operation is set by providing control signals to a bypass circuit in an integrated circuit buffer device, for example bypass elements **2905-2910** in a bypass circuit **2900** as illustrated in FIG. **29**.

Write data to larger capacity memory modules is then levelized (in addition to the write data levelization illustrated in logic block **3107**) as illustrated by logic block **3112**. In an embodiment, additional write delays are added, in response to stored write delay values, to the write data at a master, integrated circuit buffer device and/or memory device. Delays to write data may be selected based on whether write data is transferred through a memory module having an integrated circuit buffer device in a bypass mode of operation. For example, write data provided to memory module **2601** on signal path **2610** from master **2101** may be delayed compared to write data provided to memory module **2601** on signal paths **2612** and **2611** (by way of bypass circuit **2630***b*) from master **2101** so that the write data may arrive at approximately the same time.

FIGS. **32**A-E, **33**A-B, **34** and **35** illustrate at least a portion of memory system topologies including an integrated circuit buffer device **3201** to provide control/address information (RQ) to a plurality of integrated circuit memory devices **101***a-d* as well as transferring data (DQ) between the integrated circuit buffer device **3201** and the plurality of integrated circuit memory devices **101***a-d*. While each of FIGS. **32**A-E, **33**A-B, **34** and **35** illustrate one or more signal paths to transfer either control/address information (RQ) or data (DQ), other topologies or signal paths in other Figures may be combined and used to transfer control/address information (RQ) and/or data (DQ). For example, FIG. **33**A illustrates a fly-by topology having signal paths **3310** and **3310***a-d* that may be used for transferring control/address information (RQ); while data (DQ) may be transferred using a point-to-point (or segmented) topology or signal paths **3410-3413** shown in FIG. **34**. Numerous other topology combinations may likewise be used in embodiments.

While topologies are illustrated with memory modules **3200***a-e*, **3300***a-b* and **3400**, these illustrated topologies in FIGS. **32**A-E, **33**A-B and **34** may be used without a memory module. For example, topologies illustrated in FIGS. **32**A-E, **33**A-B and **34** may be used in an MCP or SIP embodiment. FIG. **35** illustrates a particular topology in MCP device **3500**.

In embodiments, a master, such as master **2101** may provide control/address information and data to one or more integrated circuit buffer devices **3201** in a topology illustrated in FIGS. **32**A-E, **33**A-B and **34**. In an embodiment, a clock signal or clock information is provided on signal paths from buffer device **3201** illustrated in FIGS. **32**A-E, **33**A-B

and **34**, or on a separate signal path from a clock source, master, buffer device, or along the data signal paths.

In embodiments, termination may be disposed on buffer **3201**, memory modules **3200***a-e*, **3300***a-b* and **3400**, signal paths, memory devices **101***a-d* and/or elsewhere in a system, such as on an PCB or substrate. In embodiments, termination for the signal paths in the topologies shown in FIGS. **32**A-E, **33**A-B and **34** may be similarly disposed as shown in FIGS. **2-4**, **6-8** and **23**A-C. For example, termination **420***a-d* shown in FIG. **4** may be similarly coupled to signal paths **3410-3413** shown in FIG. **34**.

FIGS. **32**A-E illustrate forked (data and control/address information) topologies between an integrated circuit buffer device **3201** and a plurality of integrated circuit memory devices **101***a-d*. With respect to FIG. **32**A, buffer device **3201** is coupled to signal path **3210** disposed on memory module **3200***a* that then branches into signal paths **3210***a* and **3210***d*. Signal path **3210***a* then is coupled to memory devices **101***a* and **101***b* by branches or signal paths **3210***b* and **3210***c*. Signal path **3210***d*, likewise, is coupled to memory devices **101***c* and **101***d* by branches or signal paths **3210***e* and **3210***f*.

FIG. **32**B illustrates a forked topology similar to the topology illustrated in FIG. **32**A. Signal path **3220** branches into signal paths **3220***a* and **3220***b* that couple memory devices **101***a-b* to buffer device **3201**. Similarly, signal path **3230** branches into signal paths **3230***a* and **3230***b* that couple memory devices **101***c-d* to buffer device **3201**.

FIG. **32**C illustrates a forked/multi-drop bus topology. Buffer device **3201** is coupled to signal path **3240** (or a stub) that branches into signal paths **3240***a* and **3240***b* (or a bus) that are coupled to signal paths (or stubs) **3240***c-f* coupled to memory devices **101***a-d*. Other memory devices may be coupled to signal paths **3240***a-b*.

FIG. **32**D illustrates a star topology. Signal path **3250** branches into signal path **3250***a-d* from a common node that couples memory devices **101***a-d* to buffer device **3201**.

FIG. **32**E illustrates a forked topology similar to the topology illustrated in FIG. **32**B. Signal path **3260** branches into signal paths **3260***a* and **3260***b* that couple memory devices **101***a-b* to buffer device **3201**.

FIGS. **33**A-B illustrate fly-by topologies (data and/or control/address information) between an integrated circuit buffer device **3201** and a plurality of integrated circuit memory devices **101***a-d*. FIG. **33**A illustrates a stub/fly-by topology including a buffer device **3201** coupled to a signal path **3310** that is coupled to signal paths (stubs) **3310***a-d* that are coupled to memory devices **101***a-d*. FIG. **33**B illustrates a split/stub/fly-by topology. A buffer device **3201** is coupled to a signal path **3320** that is coupled to signal paths (stubs) **3320***a-b* that are coupled to memory devices **101***a-b*. The buffer device **3201** is also coupled to a signal path **3330** that is coupled to signal paths (stubs) **3330***a-b* that are coupled to memory devices **101***c-d*. Split/stub/fly-by topologies may be divided/split into even further sections in embodiments.

FIG. **34** illustrates point-to-point (also known as segmented) topology (data and/or control/address information) between an integrated circuit buffer device **3201** and a plurality of integrated circuit memory devices **101***a-d*. Separate or segmented signal paths **3410-3413** (in particular point-to-point links) couple buffer device **3201** to memory devices **101***a-d*. A segmented topology for data using separate point-to-point links is also illustrated in FIGS. **38-39** described below.

FIG. **35** illustrates an MCP (or SIP) topology (data and/or control/address information) between an integrated circuit buffer die **1100***a* and a plurality of integrated circuit memory dies **1101***a-c*. Device **3500** includes a plurality of integrated circuit memory dies **1101***a-c* and a buffer die **1100***a* housed in or upon a common package **3510** according to embodiments. A plurality of signal paths **3501***a-c* are coupled to a signal path **3502** that provides data between the integrated circuit buffer die **1100***a* and the plurality of integrated circuit memory dies **1101***a-c*. Similarly, a plurality of signal paths **3503***a-c* are coupled to a signal path **3504** that provides control/address information from the integrated circuit buffer die **1100***a* to the plurality of integrated circuit memory dies **1101***a-c*. As described above, a plurality of integrated circuit memory dies **1101***a-d* and buffer die **1100***a* may be disposed with or without spacers and in multiple package type embodiments.

FIG. **36** is a block diagram of an integrated circuit buffer device **3600** (or a buffer die). Buffer device **3600**, includes among other circuit components, interfaces **3601** and **3611**, register set **3605**, data path **3606**, data path router **3610**, command decode **3607** and address translation **3608**. Buffer device **3600** also includes phase locked loop ("PLL") **3602**, Joint Test Action Group or IEEE 1149.1 standard ("JTAG") interface **3603**, Inter-IC ("12C") interface **3604**, pattern generator **3609** and internal memory array **3612** circuit components.

In a memory read operation, buffer device **3600** operates similar to buffer **100***a* shown in FIG. **18**. Buffer device **3600** receives control information (including address information) that may be in a packet format from a master on signal path **121** and in response, transmits corresponding signals to one or more, or all of memory devices **101***a-d* on one or more signal paths **1005**. In an embodiment, command decode **3607** and address translation **3608** output control signals to data path **3606**, data path router **3610** and interface **3611** so that received read memory commands and received read addresses are decoded and translated to corresponding control/address signals output on signal path **1005**. One or more of memory devices **101***a-d* may respond by transmitting read data to buffer device **3600** which receives the read data via one or more signal paths **1006** and in response, transmits corresponding signals to a master (or other buffer). In an embodiment, data path **3606** and data path router **3610** (in response to control signals) merge separate read data from more than one memory device into a single merged read data or read stream output at interface **3601**.

In an embodiment, memory devices **101***a-d* are configured into memory ranks having segmented (point-to-point) signal paths **1006** and a shared fly-by bus signal path **1005** as illustrated in FIGS. **33**A, **34**, **38** and **39**. A timing chart **3701** shown in FIG. **37**B, and described in detail below, illustrates an operation of buffer device **3600** that may increase bandwidth by reducing a time bubble when buffer device **3600** is coupled to ranked memory by segmented signal paths as described below.

In a memory write operation embodiment, buffer **3600** operates similar to buffer **100***a*. Buffer **3600** receives control information (including address information) that may be in a packet format from a master on signal path **121** and receives the write data for one or more memory devices **101***a-d* that may be in a packet format from a master on signal path **120***a*. In an embodiment, command decode **3607** and address translation **3608** output control signals to data path **3606**, data path router **3610** and interface **3611** so that received write memory commands and received write addresses are decoded and translated to corresponding control/address signals output on signal path **1005**. Buffer **3600** then transmits corresponding signals to one or more, or all of memory devices **101***a-d* on one or more signal paths **1006**

so that the write data may be stored. In an embodiment, data path **3606** and data path router **3610** (in response to control signals) segments or parses received write data into two or more write portions and directs the write portions to the appropriate signal paths **1006** (via interface **3611**) so that the write portions will be stored in two or more memory devices. Accordingly, buffer **3600** may receive write data having an associated write address to a particular memory device and parses/segments the received write data into a plurality of different write data portions which are then routed to a plurality of different memory devices at a plurality of different write addresses for storage.

Interfaces **3601** and **3611** correspond to portions of interfaces **1103***a* and interfaces **1820***a-b* shown in FIG. **18**. For example, interface **3601** may include one or more of transceiver **1875** and receiver circuit **1892** as well as termination **1880**. Interface **3611** may include one or more of transceiver **1894** and transmitter circuit **1893**. In an embodiment, interface **3611** includes circuits to interface with DDR3 memory devices and interface **3601** includes circuits to interface with DDR2 memory devices or other type of memory device.

In an embodiment, interface **3611** can be segmented into at least three different configurations or segmentation modes: 1) Four 4-bit interfaces (4×4), 2) Two 4-bit interfaces (2×4) or 3) Two 8-bit interfaces (2×8). The different configurations allow flexibility in memory module or memory stack configurations. Accordingly, buffer **3600** may interface with high-capacity or lower-capacity entry level memory modules or in particular memory devices. A four 4-bit interface may be used in high capacity memory modules. A two 8-bit interface may be used for low-cost memory modules. A two 4-bit interface may be used for low-cost memory modules that still support ECC.

The assignment of strobe pins to data pin groupings is adjusted depending upon the segmentation mode:

4×4 segmentation mode:
DQS[0]→DQ[3:0]
DQS[1]→DQ[7:4]
DQS[2]→DQ[11:8]
DQS[3]→DQ[15:12]
2×4 segmentation mode:
DQS[0]→DQ[3:0]
DQS[1]→DQ[7:4]
DQS[3:2], DQ[15:8] disabled
2×8 segmentation mode:
DQS[0]→DQ[7:0]
DQS[1]→DQ[15:8]
DQS[3:2] disabled

Interface **3601** enters segmentation modes in response to bit values stored in register set **3605** and/or one or more control signals from address translation **3608**.

Data path router **3610** routes read and write data between data path **3606** and interface **3611**. Control signals from command decode **3607** and address translation **3608** determine the routing of read/write data. Data path router also receives signals from pattern generator **3609** and internal memory array **3612**. In a mode of operation that emulates operation with a memory device, all memory transactions are routed to and from internal memory array **3612** rather than interface **3611**. Interface **3611** may be disabled during this mode of operation. In an embodiment, pattern generator **3609** is used as an alternate source of data (or test pattern of data) as well as a source for injecting ECC errors in modes of operation. The test pattern of data may be transmitted on either interface **3601** or interface **3611** or some portion of both simultaneously. Similarly, pattern generator **3609** may insert ECC errors on either interface **3601** or interface **3611** or some portion of both simultaneously. In an embodiment, data path router **3610** includes XOR logic used for ECC error injection. In embodiments, read and write data may proceed through data path **3606** in both directions simultaneously. Modes of operation of buffer **3600** may be entered by setting one or more bit values in multi-bit register set (or storage circuit) **3605**.

Data path router **3610** includes a write data router **3610***a* and read data router **3610***b*. In an embodiment, write data router **3610***a* outputs write data in response to a WCLK clock signal while the read data router **3610***b* outputs read data in response to a RCLK clock signal (either the positive or negative edge of RCLK clock signal). The use of two clock domains may enable the buffer **3600** to reduce latency and/or operate at a higher data rate.

During a typical mode of operation, write data router **3610***a* receives write data and mask information from data path **3606** and then routes the write data (or portion of the write data) to one of four signal paths **1006** coupled to interface **3611**. Similarly during a read operation, read data is received from one of four signal paths **1006** coupled to interface **3611** and routed to data path **3606**.

Data path router **3610** includes a plurality of signal paths used to merge read data from different memory devices as well as parse write data into write data portions to be stored in multiple memory devices.

Command decode **3607** includes a decoder to output control signals to data path **3606**, address translation **3608** and data path router **3610** in response to control information received by interface **3601** from signal path **121**. In embodiments, the control information may include memory transaction commands, such as read or write commands. Other control information may include a command to activate a particular memory bank in a particular memory device or access information having a particular page size. In an embodiment, command decode **3607** may remap/translate a received bank address to a different bank address of one or more memory devices coupled to signal paths **1006**.

Address translation circuit **3608** receives an address associated with a particular memory transaction command by way of signal path **121** and interface **3601**. For example, address translation circuit **3608** receives an address for reading data associated with a read command for a particular memory device in a particular memory organization (for example, number of ranks, number of memory devices, number of banks per memory device, page size, bandwidth). Address translation **3608** then outputs control signals (or a translated address and/or control signals) to interface **3611** (and signal path **1005**) so that the read data may be read from different memory devices (via signal paths **1006**) because the memory organization coupled to interface **3611** is different than indicated in the read command. In an embodiment, address translation **3608** may include a storage circuit to store a look-up table for translating addresses. Similarly, write addresses associated with a write command are received by address translation **3608** which outputs control signals (translated write addresses) to interface **3611** and signal path **1006** so that the corresponding write data from data path **3606** may be written to one or more translated write addresses of memory devices coupled to signal paths **1006**.

In an embodiment, information in a received row address field is used to output chip select signals. Buffer device **3600** outputs chip select information, such as chip select signals, from interface **3611** to one or more integrated circuit memory devices in response to information in a row address field received at interface **3601**. One or more row address bit

values may be remapped to chip select signals. For example, values of two particular row address bits may be used to generate four one-hot chip select signals from interface **3611** to four or more integrated circuit memory devices.

In an embodiment, information in a received row address field and received chip select signals are used to output chip select signals. Buffer device **3600** receives chip select information, such as chip select signals (via interface **3601**) and information in row address fields to generate one or more chip select signals from interface **3611** to a plurality of integrated circuit memory devices. For example, two one-hot chip select signals received at interface **3601** along with two bit values in a row address field may be used to output eight chip select signals at interface **3611** to eight integrated circuit memory devices. Similarly, four received chip select signals may be used with one bit value in a row address field to output eight chip select signals from interface **3611**.

In an embodiment, information in a bank address field is used to output chip select signals. Buffer device **3600** outputs chip select information from interface **3611** to one or more integrated circuit memory devices in response to the bank address information received at interface **3601**. Unused bank address fields/pins at interface **3601** may be used to provide chip select information at interface **3611**. For example, interface **3601** may have 5 bank address pins while four integrated circuit memory devices having 8 banks each are coupled to interface **3611**. The lower 3 pins, BA[2:0], would identify a particular bank in a particular memory device while the upper two bits BA[4:3] are used to decode/output chip select signals. The four memory devices and buffer device **3600** then may emulate one large memory die with 32 memory banks rather than 4 memory dies having 8 banks each.

In an embodiment, multiple chip select signals may be output simultaneously from interface **3611** to multiple respective memory devices in response to information in a row address field, chip select information and/or bank address information, singly or in combination.

Address translation circuit **3608** includes one or more multiplexers to receive (via interface **3601**) information in a row address field, chip select information and/or bank address information and outputs signals to interface **3611** that in turn outputs chips select signals in an embodiment.

One or more column address bit values may be re-tasked/remapped by buffer **3600** to perform time slicing, as described above, in an embodiment. For example, the functions (or portions thereof) of data width translator **2950** may be performed by address translator **3608**, command decode **3607**, data path **3606** and data path router **3610**, singly or in combination. Also, bit values in a column address field may also be used to initiate memory device functions/operations. When information in a column address field are re-tasked and this re-tasking uses lower order bit values, the remaining address bit values may be shifted to fill the lowest order column address bit values output at interface **3611**. For example, when bit values in column address A[4:3] in a column address field are remapped to time slice address bits, column address values in column address A[15:5] are shifted to column address A[13:3] to fill the lowest order column address bits.

In an embodiment, column address bit values may not be shifted when column address bit values are used to initiate a memory device operation. For example, a bit value in column address A[10] may be used to trigger an auto-precharge operation in a DDR3 memory device. When time slicing is used as described above, a bit value in column address bit A[10] would be mapped to column address bit A[10] (or not changed) while bit values in column addresses A[15:11] and A[9:5] are shifted to fill the gap caused by re-tasking bit values in column address A[4:3]. Another similar example of not shifting a particular column address value includes a bit value at column address A[12] used to trigger burst chop on column address cycles in a DDR3 memory device. In a burst chop mode of a DDR3 memory device, a portion of the read data (for example the last 4 bits of 8 bit output data) is masked or not output from an integrated circuit memory device.

Buffer device **3600** may remap column bit values used to initiate a memory device operation (i.e., auto-precharge, burst chop, read sequence ordering) to particular column address bit fields. For example, bit values in column address bits A[2:0] are used to define bit ordering from a DDR memory device. Data on each signal line coupled to an integrated circuit memory device will be returned in a different order depending on the column bit values at column address bits A[2:0]. When buffer device **3600** performs time slicing, these column bit values are reassigned to a different value to match a "time" address used to store data and to efficiently move data from an integrated circuit memory device to buffer device **3600**. In an embodiment, data path **3606** rearranges the data (from data path router **3610**) in response to control signals from address translation circuit **3608** which receives column bit address values at column address A[2:0].

When less data is needed by buffer device **3600** than expected by an integrated circuit memory device, such as in time slicing, the buffer device **3600** may use burst chop to save I/O power from the integrated circuit memory devices. This would be irrelevant of the value of a column address bit A[12] (BCN). The received BCN bit values may be stored in the data path **3605** or command decode circuit **3607** that outputs signals to chop the data as originally requested by way of interface **3601**.

In an embodiment, received chip select information and bit values in a received row address fields may be used by buffer device **3600** to assign/remap column bit values in column addresses output at interface **3611**.

Address translation circuit **3608** includes one or more multiplexers to receive (via interface **3601**) information in a column address fields and reassign/re-task column address bit values during time slicing and/or otherwise as describe above.

Buffer device **3600** may receive row address values or chip select information that then may be used to configure a memory system that accesses different sized/capacity (address space) memory modules during different modes of operations as described above in regard to FIGS. **25-29**. For example, row address values or chip select information may be used to select whether particular signal path widths are used in accessing different sized memory modules during different modes of operation as illustrated in FIGS. **25**A-B. In another example, row address values or chip select information may be used to configure bypass circuit **2900** shown in FIG. **29**, such as enabling or disabling bypass paths (i.e. via bypass elements **2905-2910**) as well as selecting delay multiplexers (i.e. outputting appropriate DELAY[0:3] control signals) shown in FIG. **29**.

In embodiments, buffer **3600** may include JTAG **3603** and/or I2C **3604** interfaces/circuits for accessing bit values in register set **3605**. JTAG **3603** may include a port having test pins used during testing of buffer **3600**. An I2C **3604** may be used for outputting or receiving bit values (by way of an I2C bus) for register set **3605** that outputs control signals to buffer device circuit components in response to

stored bit values that may represent particular buffer configurations. In an embodiment, bit values in register set **3605** may be accessed (written/read) directly through interface **3601**.

In an embodiment, register set **3605** corresponds to configuration register set **1881** shown in FIG. **18**. In an embodiment, registers set **3605** stores one or more bit values that indicate memory system topology so that interface **3611** may be configured accordingly. For example, register set **3605** may include bit values that indicate a number of integrated circuit memory devices selected for a received memory transaction/operation. Buffer device **3600** then may configure interface **3611** (in response to register value) in order to match the bandwidth associated with interface **3601**.

In an embodiment, register set **3605** may store one or more bit values indicating where to obtain information in received control information (i.e. a request packet) that may be used in determining/remapping and outputting chip select information or signals to one or more integrated circuit memory devices. As described below, information in row address fields, column address fields, bank address fields as well as received chip select signals may be used to decode and output predetermined chip select signals from integrated circuit buffer device **3600** to the plurality of integrated circuit memory devices.

In an embodiment, register set **3605** may store one or more bit values to indicate a number of signal paths (i.e. width), type of signal path topology, a number of signal lines per signal path and/or a number (or existence) of data signal strobe signal lines between integrated circuit buffer device **3611** (in particular interface **3611**) and a plurality of integrated circuit memory devices.

In an embodiment, register set **3605** may store one or more bit values to indicate how received column, row and/or bank addresses are reordered and output from buffer device **3600**.

PLL **3602** is used to synchronize the timing of receiving and/or transmitting read and write data both internally and externally to buffer **3600**. In alternate embodiments, PLL **3602** may be another clock alignment circuit that corresponds to clock circuit **1870** shown in FIG. **18**. In an embodiment, PLL **3602** outputs WCLK and RCLK clock signals in response to a clock source that may be provided to buffer **3600**.

FIGS. **37**A-B illustrate timing diagrams for an integrated circuit buffer device. In particular, FIG. **37**A illustrates a timing chart **3700** that identifies when a buffer device, such as buffer device **3600**, receives and outputs control/address information as well as receives and outputs read data when using a shared or command data signal path.

Control information, such as commands to activate a memory rank are illustrated by a shaded block A_n that represents the amount of time control signals are provided on a control/address signal path (external (Ext.) RQ or internal (Int.) RQ signal paths) during cycles of a Clock signal. For example, shaded block A_a on a row labeled Ext. RQ represents a buffer device receiving a command to activate a memory rank "a" on an Ext. RQ signal path during a first clock cycle of the Clock signal. Similarly a command to read a particular memory bank is illustrated by shaded blocks R_n on signal paths Ext. RQ and Int. RQ. For example, timing chart **3700** illustrates how a read command R_a is received by a buffer device via signal path Ext. RQ and a command R_a is output a clock cycle later onto signal path Int. RQ. In alternate embodiments, more or less memory commands or control signals may be received and generated.

Similarly, read data transferred on signal paths Ext. DQ and Int. DQ to a memory controller or from a memory rank are illustrated by a shaded block labeled Read $Data_n$. Write data may be similarly transferred.

Signal path Ext. RQ refers to a signal path that provides control/address information from a memory controller to the buffer device. Signal path Int. RQ refers to a signal path that provides control/address information from the buffer device to a plurality of integrated circuit memory devices or memory rank. Signal path Ext. DQ refers to a signal path that provides Read $Data_n$ from the buffer device to the memory controller. Signal path Int. DQ refers to a signal path that provides Read $Data_n$ from a plurality of integrated circuit memory devices or memory rank to the buffer device. In an embodiment, Ext. RQ corresponds to signal path **121** and Int. RQ corresponds to signal path **1005**; while Ext. DQ corresponds to signal path **120***a* and Int. DQ corresponds to signal path **1006**.

Timing chart **3700** illustrates that when memory ranks are coupled to the same (or shared/common) signal path that transfers Read $Data_n$, a memory system may have to be more complicated and less efficient. In particular, a shared signal path among memory ranks for transferring Read $Data_n$ may require a memory controller to track accesses to memory ranks and insert bubbles when changing access to different memory ranks. A "bubble" or "time bubble" refers to an amount of idle time a memory controller must insert in transferring data when switching between memory transaction to the same memory rank. For example, a memory controller may have to insert a bubble or idle time when switching from accessing different memory ranks so as to allow the shared or common bus to settle (or allow time for tri-state drivers in a transceiver to switch to an alternate state as well as allow time for another preamble signal) or for noise to dissipate before initiating another memory rank access or (in the case of strobed memory devices) to allow for a strobe preamble. This insertion of bubbles reduces signal path utilization and may lower bandwidth on both internal and external signal paths.

FIG. **37**B illustrates a timing chart **3701** that eliminates the need for a memory controller to track memory rank accesses and insert bubbles thereby reducing memory controller complexity and increasing bandwidth. Timing chart **3701** is similar to timing chart **3700** except rather than having a shared signal path for transferring data between a buffer device and memory ranks, segmented signal paths or dedicated signal paths Int. DQ(**0**)-(**7**) are provided between the buffer device and each memory rank (8 memory ranks). Bubbles are no longer present on the Ext. DQ signal path as Read $Data_{a\text{-}f}$ are provided on separate signal paths Int. DQ(**0**)-(**7**) from respective memory ranks.

FIG. **38** illustrates a system **3800** including a buffer device **3600** and a plurality of integrated circuit memory devices **101***a*-**101***n* organized in different memory ranks (1-4). System **3800** may be included in a memory system including other buffer devices and/or memory controllers as described herein.

A "memory rank" or "rank" refers to a number of integrated circuit memory devices grouped to output a predetermined amount of data bits or blocks of data, such as 72 data bits (64 data bits plus 8 ECC bits provided by an ECC device), onto a signal path during a predetermined period of time. For example a dual rank system (using rank 1 and rank 2 shown in FIG. **38**) may provide two 64 data bit blocks from two sets of integrated circuit memory devices, rank 1 and rank 2. In an embodiment, the integrated circuit memory devices may be ×4 memory devices (memory devices that

produce 4 bits of data) or ×8 memory devices (memory devices that produce 8 bits of data). In this example, 8×8 memory devices could produce a 64 data bit block or 16×4 memory devices could produce a 64 data bit block. In embodiments, different numbers of ranks may be used.

Buffer device **3600** receives control/address information as well as data from a memory controller via signal paths **120***a* and **121**. In an embodiment, interface **3601** as illustrated in FIG. **36**, is used to receive control/address information and write data as well as output read data from integrated circuit memory devices in system **3800**. Buffer device **3600** outputs translated (and/or decoded) control/address information as well as selected write data to integrated circuit memory devices **101***a-n* in memory ranks 1-4 using interface **3611** of buffer **3600**.

Interface **3611** is coupled to signal paths **3801-3804** and signal path **3810**. Signal paths **3801-3804** are segmented signal paths to transfer read and write data between buffer device **3600** and integrated circuit memory devices in ranks 1-4. Signal path **3801** is coupled to memory devices **101***a-n* in rank 1. Signal path **3802** is coupled to memory devices **101***a-n* in rank 2. Signal path **3803** is coupled to memory devices **101***a-n* in rank 3. Signal path **3804** is coupled to memory devices **101***a-n* in rank 4. In an embodiment, read and write data is transferred using a segmented topology as illustrated in FIG. **34**.

In contrast, signal path **3810** provides control/address information to memory ranks 1-4 on a shared/common signal path **3810**, such as a fly-by topology shown in FIG. **33**A. Each memory device in each memory rank is coupled to shared signal path **3810**. In embodiments, clock signals or clock information may be provided on either signal paths **3801-3804** or signal path **3810** or on another separate signal path.

FIG. **39** illustrates a system **3900** for accessing individual memory devices that function as respective memory ranks. System **3900** illustrates an embodiment similar to system **3800** except that memory devices **3901***a-h* are included in respective memory ranks. In an embodiment, memory devices **3900***a-h* are eight ×4 DDR3 memory devices. Accordingly, system **3900** is an eight rank system having respective segmented data signal paths. Segmented signal paths **3904***a-h* transfer data bits DQ [0:3] between data segment (segmentation) and merge circuit **3902** and respective memory devices **3901***a-h*. A data mask signal DM is provided to respective memory devices **3901***a-h* from data segment and merge circuit **3902**. Similarly, clock signals or differential strobe signals DQS and DQSN are provided from data segment and merge circuit **3902** for synchronization of data signals. Control/address signals are provided on signal path **3903** that is a shared signal path similar to signal path **3810** shown in FIG. **38**.

In an embodiment, data segment and merge circuit **3902** operates similar to one or more circuit components in buffer device **3600** shown in FIG. **36**. Data segment and merge circuit **3902** merges read data from a plurality of memory devices **3901***a-h* onto a single signal path as a read data stream. Likewise, data segment and merge circuit **3902** segments a single write data from a single signal path into multiple write data output to multiple signal paths coupled to multiple memory devices **3901***a-h*. For example, data segment and merge circuit **3902** may include the functionality of data path circuit **3606**, data path router **3610**, command decode **3607** and address translation circuit **3608**, singly or in combination. In an embodiment, mux control and RQ state information is provided by a control circuit, such as command decode **3607** and address translation circuit **3608** shown in FIG. **36**. Mux control and RQ state information determines the source or destination of read/write data.

FIG. **40** illustrates a method **4000** of operation in an integrated circuit buffer device. In an embodiment, buffer device **3600** performs method **4000**. Method **4000** begins at logic block **4001** where an integrated circuit buffer device is reset and/or power is provided. In logic block **4002**, an integrated circuit buffer device receives first control information that indicates a read operation for a first memory organization. In an embodiment, a master provides the first control information to access a first memory configuration that includes a first predetermined number of memory devices, banks as well as predetermined page length/size and bandwidth. However, the buffer device interfaces with a second different memory organization that may include a second predetermined number of memory devices, banks as well as predetermined page length/size and bandwidth.

A virtual page size/length may be the size of data or memory block that may be used by a processor or memory controller. For example, if a process requests an operating system to allocate 64 bytes, but the page size is 4 KB, then the operating system must allocate an entire virtual page or 4 KB to the process. In embodiments, a physical page size/length may equal the amount of data provided by a memory rank or the amount of data bits available from a plurality of sense amplifiers in one or more banks of one of more integrated circuit memory devices in the memory rank. A virtual page size may equal a physical page size in an embodiment. A memory controller may be able to adjust the virtual page size but not the physical page size.

Logic blocks **4003** and **4004** illustrate outputting second and third control information to a first signal path coupled to first and second integrated circuit memory devices in the second memory organization.

Logic blocks **4005** and **4006** illustrate receiving first and second data from second and third signal paths coupled to the first and second integrated circuit memory devices in the second memory organization.

Logic block **4007** illustrates merging and output read data that includes the first and second read data from the integrated circuit buffer device in response to the first control information.

In an embodiment, one or more logic blocks **4002-4007** may be repeated.

Logic block **4008** illustrates ending method **4000** when power is removed. In alternate embodiments, method **4000** may end without power removed.

A method of operation of a buffer device that transfers write data performs similar steps illustrated in method **4000**. However rather than receiving and outputting read data as illustrated by blocks **4005-4007**, write data may be segmented and transferred to second and third signal paths in response to first control information.

Signals described herein may be transmitted or received between and within devices/circuits using signal paths and generated using any number of signaling techniques including without limitation, modulating the voltage or current level of an electrical signal. The signals may represent any type of control and timing information (e.g. commands, address values, clock signals, and configuration/parameter information) as well as data. In an embodiment, a signal described herein may be an optical signal.

A variety of signals may be transferred on signal paths as described herein. For example, types of signals include differential (over a pair of signal lines), non-return to zero ("NRZ"), multi-level pulse amplitude modulation ("PAM"),

phase shift keying, delay or time modulation, quadrature amplitude modulation ("QAM") and Trellis coding.

In an embodiment employing multi-level PAM signaling, a data rate may be increased without increasing either the system clock frequency or the number of signal lines by employing multiple voltage levels to encode unique sets of consecutive digital values or symbols. That is, each unique combination of consecutive digital symbols may be assigned to a unique voltage level, or pattern of voltage levels. For example, a 4-level PAM scheme may employ four distinct voltage ranges to distinguish between a pair of consecutive digital values or symbols such as 00, 01, 10 and 11. Here, each voltage range would correspond to one of the unique pairs of consecutive symbols.

In an embodiment, a clock signal is used to synchronize events in a memory module and/or device such as synchronizing receiving and transmitting data and/or control information. In an embodiment, globally synchronous clocking is used (i.e., where a single clock frequency source is distributed to various devices in a memory module/system). In an embodiment, source synchronous clocking is used (i.e., where data is transported alongside a clock signal from a source to a destination such that a clock signal and data become skew tolerant). In an embodiment, encoding data and a clock signal is used. In alternate embodiments, combinations of clocking or synchronization described herein are used.

In embodiments, signal paths described herein include one or more conducting elements, such as a plurality of wires, metal traces (internal or external), signal lines or doped regions (positively or negatively enhanced), as well as one or more optical fibers or optical pathways, singly or in combination. In embodiments, multiple signal paths may replace a single signal path illustrated in the Figures and a single signal path may replace multiple signal paths illustrated in the Figures. In embodiments, a signal path may include a bus and/or point-to-point connection. In an embodiment, signal paths include signal paths for transferring control and data signals. In an alternate embodiment, signal paths include only signals paths for transferring data signals or only signal paths for transferring control signals. In still other embodiments, signal paths transfer unidirectional signals (signals that travel in one direction) or bidirectional signals (signals that travel in two directions) or combinations of both unidirectional and bidirectional signals.

It should be noted that the various circuits disclosed herein may be described using computer aided design tools and expressed (or represented) as data and/or instructions embodied in various computer-readable media, in terms of their behavior, register transfer, logic component, transistor, layout geometries, and/or other characteristics. Formats of files and other objects in which such circuit expressions may be implemented include, but are not limited to: formats supporting behavioral languages such as C, Verilog, and HLDL; formats supporting register level description languages like RTL; formats supporting geometry description languages such as GDSII, GDSIII, GDSIV, CIF, MEBES; and any other suitable formats and languages. Computer-readable media in which such formatted data and/or instructions may be embodied include, but are not limited to, non-volatile storage media in various forms (e.g., optical, magnetic or semiconductor storage media) and carrier waves that may be used to transfer such formatted data and/or instructions through wireless, optical, or wired signaling media or any combination thereof. Examples of transfers of such formatted data and/or instructions by carrier waves include, but are not limited to, transfers (uploads, downloads, e-mail, etc.) over the Internet and/or other computer networks via one or more data transfer protocols (e.g., HTTP, FTP, SMTP, etc.). When received within a computer system via one or more computer-readable media, such data and/or instruction-based expressions of the above described circuits may be processed by a processing entity (e.g., one or more processors) within the computer system in conjunction with execution of one or more other computer programs including, without limitation, netlist generation programs, place and route programs and the like, to generate a representation or image of a physical manifestation of such circuits. Such representation or image may thereafter be used in device fabrication, for example, by enabling generation of one or more masks that are used to form various components of the circuits in a device fabrication process.

The foregoing description of several embodiments has been provided for the purposes of illustration and description. It is not intended to be exhaustive or to limit the embodiments to the precise forms disclosed. Modifications and variations will be apparent to practitioners skilled in the art. The embodiments were chosen and described in order to explain inventive principles and practical applications, thereby enabling others skilled in the art to understand various embodiments and with the various modifications as are suited to the particular use contemplated. It is intended that the scope of the invention be defined by the following claims and their equivalents.

We claim:

1. A memory controller to control the operation of an external memory module, the memory controller comprising:

a circuit to receive configuration information from non-volatile storage of the external memory module, the configuration information representing presence of a plurality of memory die stacks disposed on the external memory module; and

an interface to transmit, as part of a memory access operation,

a memory access command to specify a memory access,

a chip select signal to select the memory die stacks for the memory access; and

information representing selection of a particular die within each die stack of the plurality of memory die stacks.

2. The memory controller of claim **1**, wherein the non-volatile storage comprises a serial presence detect (SPD) register, and wherein circuit to receive the configuration information is to access the SPD register.

3. The master of claim **1**, wherein the configuration information comprises values representing timing parameters of the plurality of memory die stacks, wherein the timing parameters include row access time, column access time, time between accesses to successive rows, and time between accesses to successive columns, and wherein the memory controller transmits memory access command timed according to the timing parameters.

4. The memory controller of claim **1**, wherein the information representing selection of a particular die within each die stack of the plurality of die stacks comprises one or more bits, wherein the one or more bits are to effectuate selection of the particular die within each die stack of the plurality of memory die stacks with each memory access command.

5. The memory controller of claim 4, wherein the one or more bits are included in a row address provided with the memory access command to each die stack of the plurality of memory die stacks.

6. The memory controller of claim 1, wherein the interface is to transmit a row address to activate a row in the particular die within each die stack of the plurality of memory die stacks, wherein the information representing selection of the particular die is provided with the row address.

7. The memory controller of claim 1, wherein the particular die in each die stack of the plurality of memory die stacks provides a respective slice of data as part of the memory access operation.

8. The memory controller of claim 1, wherein the configuration information specifies a number of memory dies within each die stack of the plurality of memory die stacks.

9. A method of operation of a memory controller, the memory controller to control the operation of memory dies disposed on an external memory module, the method comprising:

receiving configuration information from non-volatile storage of the external memory module, the configuration information representing presence of a plurality of memory die stacks disposed on the external memory module; and

as part of a memory access operation, transmitting,

a memory access command to specify a memory access,

a chip select signal to select the memory die stacks for the memory access, and

information representing selection of a particular die within each die stack of the plurality of memory die stacks.

10. The method of claim 9, wherein the configuration information specifies a number of memory dies within each die stack of the plurality of memory die stacks.

11. The method of claim 9, wherein receiving configuration information is performed during an initialization sequence.

12. The method of claim 9, wherein the configuration information comprises values representing timing parameters of the plurality of memory die stacks, wherein transmitting the memory access command comprises transmitting the memory access command according to the timing parameters.

13. The method of claim 12, wherein the timing parameters include row access time, column access time, time between accesses to successive rows, and time between accesses to successive columns of the plurality of memory dies.

14. The method of claim 9, wherein the information representing selection of a particular die within each die stack of the plurality of memory die stacks comprises one or more bits, wherein the one or more bits are to effectuate selection of the particular die within each die stack of the plurality of memory die stacks with each memory access command.

15. The method of claim 14, further comprising transmitting a row address to the plurality of memory die stacks, wherein the wherein the one or more bits are included in the row address.

16. The method of claim 9, further comprising transmitting a row address to activate a row in the particular die in each stack of the plurality of memory die stacks, wherein the information representing selection of the particular die is transmitted with the row address.

17. The method of claim 9, wherein the particular die in each die stack of the plurality of memory die stacks provides a respective slice of data as part of the memory access operation.

18. A memory controller to control the operation of a plurality of memory die stacks, the memory controller comprising:

a circuit to receive configuration information representing a number of memory die within each stack of the plurality of memory die stacks; and

an interface to transmit to the plurality of memory die stacks, as part of a memory access operation,

a memory access command to specify a memory access,

a chip select signal to select the memory die stacks for the memory access, and

information representing selection of a particular die within each die stack of the plurality of memory die stacks.

19. The memory controller of claim 18, wherein the configuration information is to be received from non-volatile storage of an external memory module containing the plurality of memory die stacks.

20. The memory controller of claim 19, wherein the information representing selection of a particular die within each die stack of the plurality of memory die stacks comprises one or more bits, wherein the one or more bits are to effectuate selection of the particular die within each die stack of the plurality of memory die stacks with each memory access command.

* * * * *