JEDEC STANDARD

FBDIMM:
Advanced Memory Buffer (AMB)

JESD82-20

SPECIAL DISCLAIMER: JEDEC has received information that certain patents or patent applications may be relevant to this standard, and, as of the publication date of this standard, no statements regarding an assurance or refusal to license such patents or patent applications have been provided.

http://www.jedec.org/download/search/FBDIMM/Patents.xls

JEDEC does not make any determination as to the validity or relevancy of such patents or patent applications. Prospective users of the standard should act accordingly.

MARCH 2007

JEDEC SOLID STATE TECHNOLOGY ASSOCIATION

JEDEC

EIA
Electronic Industries Alliance

NOTICE

JEDEC standards and publications contain material that has been prepared, reviewed, and approved through the JEDEC Board of Directors level and subsequently reviewed and approved by the JEDEC legal counsel.

JEDEC standards and publications are designed to serve the public interest through eliminating misunderstandings between manufacturers and purchasers, facilitating interchangeability and improvement of products, and assisting the purchaser in selecting and obtaining with minimum delay the proper product for use by those other than JEDEC members, whether the standard is to be used either domestically or internationally.

JEDEC standards and publications are adopted without regard to whether or not their adoption may involve patents or articles, materials, or processes. By such action JEDEC does not assume any liability to any patent owner, nor does it assume any obligation whatever to parties adopting the JEDEC standards or publications.

The information included in JEDEC standards and publications represents a sound approach to product specification and application, principally from the solid state device manufacturer viewpoint. Within the JEDEC organization there are procedures whereby a JEDEC standard or publication may be further processed and ultimately become an ANSI standard.

No claims to be in conformance with this standard may be made unless all requirements stated in the standard are met.

Inquiries, comments, and suggestions relative to the content of this JEDEC standard or publication should be addressed to JEDEC at the address below, or call (703) 907-7559 or www.jedec.org

Published by
©JEDEC Solid State Technology Association 2007
2500 Wilson Boulevard
Arlington, VA 22201-3834

This document may be downloaded free of charge; however JEDEC retains the copyright on this material. By downloading this file the individual agrees not to charge for or resell the resulting material.

PRICE: Please refer to the current
Catalog of JEDEC Engineering Standards and Publications online at
http://www.jedec.org/Catalog/catalog.cfm

Printed in the U.S.A.
All rights reserved

PLEASE!

DON'T VIOLATE
THE
LAW!

This document is copyrighted by the JEDEC Solid State Technology Association
and may not be reproduced without permission.

Organizations may obtain permission to reproduce a limited number of copies
through entering into a license agreement. For information, contact:

JEDEC Solid State Technology Association
2500 Wilson Boulevard
Arlington, Virginia 22201-3834
or call (703) 907-7559

Special Disclaimer

JEDEC has received information that certain patents or patent applications may be relevant to this standard, and, as of the publication date of this standard, no statements regarding an assurance or refusal to license such patents or patent applications have been provided.

http://www.jedec.org/download/search/FBDIMM/Patents.xls

JEDEC does not make any determination as to the validity or relevancy of such patents or patent applications. Prospective users of the standard should act accordingly.

§

Table of Contents

Table of Contents i

List of Tables v

List of Figures vii

1 Introduction 1

1.1 Advanced Memory Buffer Overview 1
1.2 Advanced Memory Buffer Functionality 1
1.2.1 Advanced Memory Buffer 1
1.2.2 Transparent Mode for DRAM Test Support 1
1.2.3 Debug and Logic Analyzer Interface 2
1.2.4 DDR SDRAM 2
1.3 Advanced Memory Buffer Block Diagram 2
1.4 Interfaces 4
1.4.1 FBD High-Speed Differential Point-to-Point Link (at 1.5 V) Interfaces 4
1.4.2 DDR2 Channel 4
1.4.3 SMBus Slave Interface 4
1.5 References 5
1.6 Glossary 5

2 FBD Channel Interface 9

2.1 Advanced Memory Buffer Support for FBD Operating Modes 9
2.2 Channel Initialization 9
2.3 Channel Protocol 9
2.3.1 General 9
2.3.2 Timeouts during TS0 9
2.3.3 Recalibrate state considerations 9
2.3.4 Address Mapping of DDR Commands to DRAMs 11
2.3.5 FBD L0s State 11
2.4 Reliability, Availability, and Serviceability 12
2.4.1 General 12
2.4.2 Channel Error Detection and Logging 12
2.5 Channel Configuration 12
2.5.1 Re-sync and Resample Modes 12
2.5.2 Other Channel Configuration Modes 13
2.5.3 Lane to Lane Skew on a Channel 13
2.6 Repeater Mode 13
2.7 Performance 14
2.7.1 Idle Memory Read Latency 14
2.8 AMB Components of Channel Latency 15
2.8.1 Command to Data Delay Calculation 15
2.8.2 Channel Throughput 18

3 DDR Interface 19

3.1 Advanced Memory Buffer DDR Interface Overview 19
3.2 Data Mapping 19
3.2.1 Data Mask 19
3.3 Command / Address Outputs 20
3.3.1 CKE Output Control 21
3.3.2 Memory Controller / BIOS requirements 21
3.4 DQS IO and DM Outputs 21

Petitioners
Ex. 1027, p. i

3.5 Refresh 22
3.5.1 Self-Refresh During Channel Reset 22
3.5.2 Automatic Refresh 23
3.6 Back to Back Turnaround Time 23
3.7 DDR Calibration 24
3.7.1 DRAM Initialization and (E)MRS 24
3.7.2 Automatic DDR Bus Calibration 25
3.7.3 S3 Recovery Configuration Registers 25
3.7.4 Receive Enable Calibration 26
3.7.5 DQS Delay Calibration 26
3.8 DDR MEMBIST 26
3.8.1 MEMBIST Features 27
3.9 DIMM Organization 29

4 Electrical, Power, and Thermal 31

4.1 Electrical DC Parameters 31
4.1.1 Absolute maximum ratings 31
4.1.2 Normal Mode 32
4.1.3 S3 current Specification 39
4.2 FBD Channel Interface 40
4.2.1 FBD Electrical Timing Specifications 40
4.2.2 AMB Latency Parameters 40
4.3 DDR2 DRAM Interface Electrical Specifications 45
4.4 DDR2 Electrical Output Timing Specifications 46
4.4.1 Description of DQ/DQS Alignment 46
4.4.2 Description of ADD/CMD/CNTL Outputs 46
4.4.3 Test Load Specification 46
4.4.4 tDVA and tDVB Parameter Description 46
4.4.5 tjit and tjitHP Parameter Description 47
4.4.6 tCVA, tCVB, tECVA and tECVB Parameter Description 47
4.4.7 tDQSCK Timing Parameter Description 48
4.4.8 DQ and CB (ECC) Setup/Hold Relationships to/from DQS (Read Operation) 48
4.4.9 Write Preamble Duration 49
4.4.10 Write Postamble Duration 49
4.4.11 Advance Memory Buffer Component Electrical Timing Summary 50
4.4.12 Reference DDR2 Interface Package Trace Lengths 52
4.5 SMBUS Interface 53
4.6 Misc I/O (1.5 CMOS Driver) 53
4.7 Thermal Diode and Analog to Digital Converter (ADC) 53
4.7.1 Thermal Sensor Effects on the Advanced Memory Buffer's Functional Behavior 54

5 Error Handling 55

5.1 Types of Errors and Responses 55
5.1.1 FBD Link Errors 55
5.1.2 DDR Errors 56
5.1.3 Host Protocol Errors 56
5.1.4 Other Errors 57
5.2 Error Logging 58
5.2.1 Error Logging Procedure 58
5.3 Fail Over Mode Support 58
5.4 Failback to Pass-Thru 58

6 Transparent Mode 59

6.1 Transparent Mode 59

Petitioners
Ex. 1027, p. ii

6.1.1 Block Diagram 59
6.1.2 Transparent Mode Signal Definitions 60
6.1.3 Transparent Mode to FBD Pin Mapping 60
6.1.4 Clock Frequency and Core Timing 61
6.1.5 Transparent mode timing 61
6.1.6 Error reporting 66
6.1.7 Transparent mode IO specifications 68
6.1.8 IO implementation guidelines 69
6.2 Transparent Mode Control and Status Registers 70

7 SMBus Interface 71

7.1 System Management Access 71
7.1.1 SMBus 2.0 Specification Compatibility 71
7.1.2 Supported SMBus Commands 71
7.1.3 FBD AMB Register Access Protocols 72
7.1.4 SMBus Error Handling 75
7.1.5 SMBus Resets 75

8 Clocking 77

8.1 Advanced Memory Buffer Clock Domains 77
8.2 PLL Clocks 77
8.3 Reference Clock 77
8.4 FBD Lane Frame Clocks 77
8.5 Clock Ratios 77
8.6 DDR DRAM Clock Support 78
8.7 Clock Pins 78
8.8 . PLL Requirements 78
8.8.1 Jitter 78
8.8.2 PLL Bandwidth Requirements 79
8.8.3 External Reference 79
8.8.4 Spread Spectrum Support 79
8.9 Analog Power Supply Pins 79

9 Pin Descriptions 81

9.1 Pin Description 81

10 Reset 85

10.1 Introduction 85
10.2 Platform Reset Functionality 85
10.2.1 Platform RESET# Requirements 85
10.2.2 Advanced Memory Buffer RESET# Requirements 85
10.2.3 Power-Up and Suspend-to-RAM Considerations 86
10.3 Reset Types 86
10.4 Pads Controlling Reset 86
10.4.1 RESET# Pad 86
10.4.2 Primary FBD Link 86
10.5 Details 86
10.5.1 Cold Power-Up Reset Sequence 86
10.6 Timing Diagrams 88
10.7 I/O Initialization 88
10.7.1 FBD Channel Initialization 88

11 Registers 89

11.1 Access Mechanisms 89

Petitioners
Ex. 1027, p. iii

11.1.1 Conflict Resolution and Usage Model Limitations 89
11.1.2 FBD Data on Configuration Read Returns 89
11.1.3 Non-Existent Register Bits 89
11.1.4 Register Attribute Definition 90
11.1.5 Binary Number Notation 90
11.1.6 Function Mapping 90
11.2 PCI Standard Header Identification Registers (Function 0) 99
11.2.1 VID: Vendor Identification Register 99
11.2.2 DID: Device Identification Register 100
11.2.3 RID: Revision Identification Register 100
11.2.4 CCR: Class Code Register 100
11.2.5 HDR: Header Type Register 101
11.3 FBD Link Registers (Function 1) 101
11.3.1 FBD Link Control and Status 101
11.3.2 Error Registers 115
11.3.3 PERSONALITY BYTES loaded from the SPD 117
11.3.4 Advanced Memory Buffer Hardware Configuration Registers 119
11.4 Implementation Specific FBD Registers (Function 2) 121
11.5 DDR and Miscellaneous Registers (Function 3) 121
11.5.1 Memory BIST Registers 121
11.5.2 Memory Registers 130
11.5.3 Thermal Sensor Registers 136
11.6 Implementation Specific DDR Initialization and Calibration Registers (Function 4) . 139
11.6.1 DDR Calibration 139
11.7 DFX Registers (Function 5) 142
11.7.1 Transparent Mode Registers 142
11.7.2 Logic Analyzer Interface (LAI) Registers 143
11.7.3 Error Injection Registers 154
11.8 Bring-up and Debug Registers (Function 6) 154
11.8.1 Southbound FBD IBIST registers 154
11.8.2 Northbound FBD IBIST registers 160

12 Ballout and Package Information 167

12.1 655-ball FBGA (23x29 Array, 19.5x24.5 mm Body Size, 0.8 mm Pitch, MO-261A Variation AA/ BA) Pin configuration 179
12.2 Pin Assignments for the Advanced Memory Buffer (AMB) 168
12.3 Package Information 176

Petitioners
Ex. 1027, p. iv

List of Tables

1 Example FBD-667 Channel Idle Memory Read Latencies 14

2 DQS association with DQ/CB pins in x8 and x4 mode. 22

3 MEMBIST Feature Summary 27

4 Absolute maximum ratings over operating free-air temperature range (see Note 1) 31

5 Advanced Memory Buffer Normal Mode DC Electrical Parameters 32

6 AMB Power Specification Parameters and Test Conditions 32

7 Advanced Memory Buffer FBD Timing/Electrical 40

8 Recommended operating conditions for DRAM Interface 45

9 tDVA and tDVB Timing Diagram 47

10 tjit and tjitHP Timing Diagram 47

11 tCVA and tCVB Timing Diagram 47

12 tECVA and tECVB Timing Diagram 48

13 TDQSCK Timing Diagram 48

14 DQ and CB (ECC) Setup/Hold Relationship to/from DQS Timing Diagram 49

15 Write Preamble Duration Timing Diagram 49

16 Write Postamble Duration Timing Diagram 50

17 Advance Memory Buffer Component DDR2 Electrical Timing Specifications 50

18 Advance Memory Buffer DDR2 Package Lengths 52

19 Recommended operating conditions for SMBUS Interface 53

20 Recommended operating conditions for RESET and BFUNC pins 53

21 Link Errors in Initialization 55

22 Link Errors in Normal Operation 55

23 DDR Errors 56

24 Host Protocol Errors 57

25 Other Errors 57

26 Additional Signals in Transparent Mode 60

27 Mapping of FBD Pins in Transparent Mode 61

28 Mapping of burst position bits to error capture 67

Petitioners
Ex. 1027, p. v

29 Selection of 8 bit data paths when ENDOUT is set ... 68

30 Transparent mode FB-DIMM interface signaling specifications ... 68

31 SMBus command Encoding ... 72

32 SMBus Protocol Addressing fields ... 72

33 Status Field Encoding for SMBus Reads ... 73

34 Advanced Memory Buffer Clock Ratios ... 78

35 Clock Pins ... 78

38 Access to “Non-existent” Register Bits ... 89

39 Register Attributes Definitions ... 90

40 Function Mapping Legend ... 91

41 Function 0: PCI Standard Header Identification Registers ... 92

42 Function 1: FBD Link Registers ... 93

43 Function 2: Implementation Specific FBD Registers ... 94

44 Function 3: DDR and Miscellaneous Registers ... 95

45 Function 4: Implementation Specific DDR Initialization and Calibration Registers ... 96

46 Function 5: DFX Registers ... 97

47 Function 6: IBIST, Bring-up and Debug Registers ... 98

48 Functions 7: FBD DFX/Defeature Registers ... 99

49 Functional mapping of MemBIST data fields by test mode ... 126

50 MBDATA Failure Address register correspondence to DRAM address ... 127

51 BL4 Column and Chunk correspondence to DRAM address ... 127

52 BL8 Column and Chunk correspondence to DRAM address ... 127

53 Functional Characteristics of DCALADDR ... 140

54 Bit Locations for SB Match and Mask ... 144

55 Local Mask and Match Events selected by MMEVENTnSEL fields ... 148

Petitioners
Ex. 1027, p. vi

List of Figures

1 Advanced Memory Buffer Block Diagram 3

2 Advanced Memory Buffer Interfaces 4

3 Delays Through an AMB 16

4 Command to Data Delay timing 17

5 Nominal Turnaround Time Timing Diagram 24

6 Transparent Mode Simplified Block Diagram 59

7 Transparent Mode Timing 63

8 Transparent mode write timing 64

9 Transparent mode read timing 65

10 BL=8 Read timing 66

11 SMBus Configuration Read (Block Write / Block Read, PEC enabled) 73

12 SMBus Configuration Read (Write Bytes / Read Bytes, PEC enabled) 74

13 SMBus Configuration Double Word Write (Block Write, PEC enabled) 74

14 SMBus Configuration Double Word Write (Write Bytes, PEC enabled) 75

15 SMBus Configuration Word Write (Block Write, PEC disabled) 75

16 SMBus Configuration Byte Write (Write Bytes, PEC disabled) 75

Petitioners
Ex. 1027, p. vii

Petitioners
Ex. 1027, p. viii

FBDIMM: Advanced Memory Buffer (AMB)

(From JEDEC Board ballot JCB-06-42, formulated under the cognizance of the JC-40 Committee on Digital Logic.)

1 Introduction

This document is a core specification for a Fully Buffered DIMM (FBD) memory system. This document, along with the other core specifications, must be treated as a whole. Information critical to a Advanced Memory Buffer design appears in the other specifications, with specific cross-references provided.

1.1 Advanced Memory Buffer Overview

The Advanced Memory Buffer (AMB) reference design complies with the *FB-DIMM Architecture and Protocol Specification* . It supports DDR2 SDRAM main memory. The Advanced Memory Buffer allows buffering of memory traffic to support large memory capacities. All memory control for the DRAM resides in the host, including memory request initiation, timing, refresh, scrubbing, sparing, configuration access, and power management. The Advanced Memory Buffer interface is responsible for handling FBD channel and memory requests to and from the local DIMM and for forwarding requests to other DIMMs on the FBD channel.

Fully Buffered DIMM (FBD) provides a high memory bandwidth, large capacity channel solution that has a narrow host interface. Fully Buffered DIMMs use commodity DRAMs isolated from the channel behind a buffer on the DIMM. The memory capacity is 288 devices per channel and total memory capacity scales with DRAM bit density. The Advanced Memory Buffer is the buffer that isolates the DRAMs from the channel.

1.2 Advanced Memory Buffer Functionality

1.2.1 Advanced Memory Buffer

The Advanced Memory Buffer will perform the following FBD channel functions:

- Supports channel initialization procedures as defined in the initialization chapter of the *FB-DIMM Architecture and Protocol Specification* to align the clocks and the frame boundaries, verify channel connectivity, and identify AMB DIMM position.
- Supports the forwarding of southbound and northbound frames, servicing requests directed to a specific AMB or DIMM, as defined in the protocol chapter, and merging the return data into the northbound frames.
- If the AMB resides on the last DIMM in the channel, the AMB initializes northbound frames.
- Detects errors on the channel and reports them to the host memory controller.
- Support the FBD configuration register set as defined in the register chapters.
- Acts as DRAM memory buffer for all read, write, and configuration accesses addressed to the DIMM.
- Provides a read buffer FIFO and a write buffer FIFO.
- Supports an SMBus protocol interface for access to the AMB configuration registers.
- Provides logic to support MEMBIST and IBIST Design for Test functions.
- Provides a register interface for the thermal sensor and status indicator.
- Functions as a repeater to extend the maximum length of FBD Links.

1.2.2 Transparent Mode for DRAM Test Support

In this mode, the Advanced Memory Buffer will provide lower speed tester access to DRAM pins through the FBD I/O pins. This allows the tester to send an arbitrary test pattern to the DRAMs. Transparent mode only supports a maximum DRAM frequency equivalent to DDR2 400.

Transparent mode functionality:

- Reconfigures FBD inputs from differential high speed link receivers to two single ended lower speed receivers (~200 MHz)
- These inputs directly control DDR2 Command/Address and input data that is replicated to all DRAMs
- Uses low speed direct drive FBD outputs to bypass high speed Parallel/Serial circuitry and provide test results back to tester

1.2.3 Debug and Logic Analyzer Interface

When optional LAI functionality is supported, the Advanced Memory Buffer can be used to support the connection of FBD links to a Logic Analyzer (LA) for debug.

Advanced Memory Buffer debug functionality:

- Reconfigures DDR2 interface to act as a Logic Analyzer Interface (LAI) to observe activity on FBD high speed links
- Triggers on programmable events in normal operation

1.2.4 DDR SDRAM

DDR2 SDRAM support:

- Supports DDR2 at speeds of 533, 667 and 800 MT/s
- Supports 256, 512, 1024, 2048 and 4096 Mb devices in x4 and x8 configurations
- 288 devices/channel (8 DIMMs/channel, 1 and 2 ranks/DIMM)
- 72-bit DDR2 SDRAM unregistered, unbuffered memory interface

1.3 Advanced Memory Buffer Block Diagram

Figure 1.1 is a conceptual block diagram of the Advanced Memory Buffer’s data flow and clock domains.

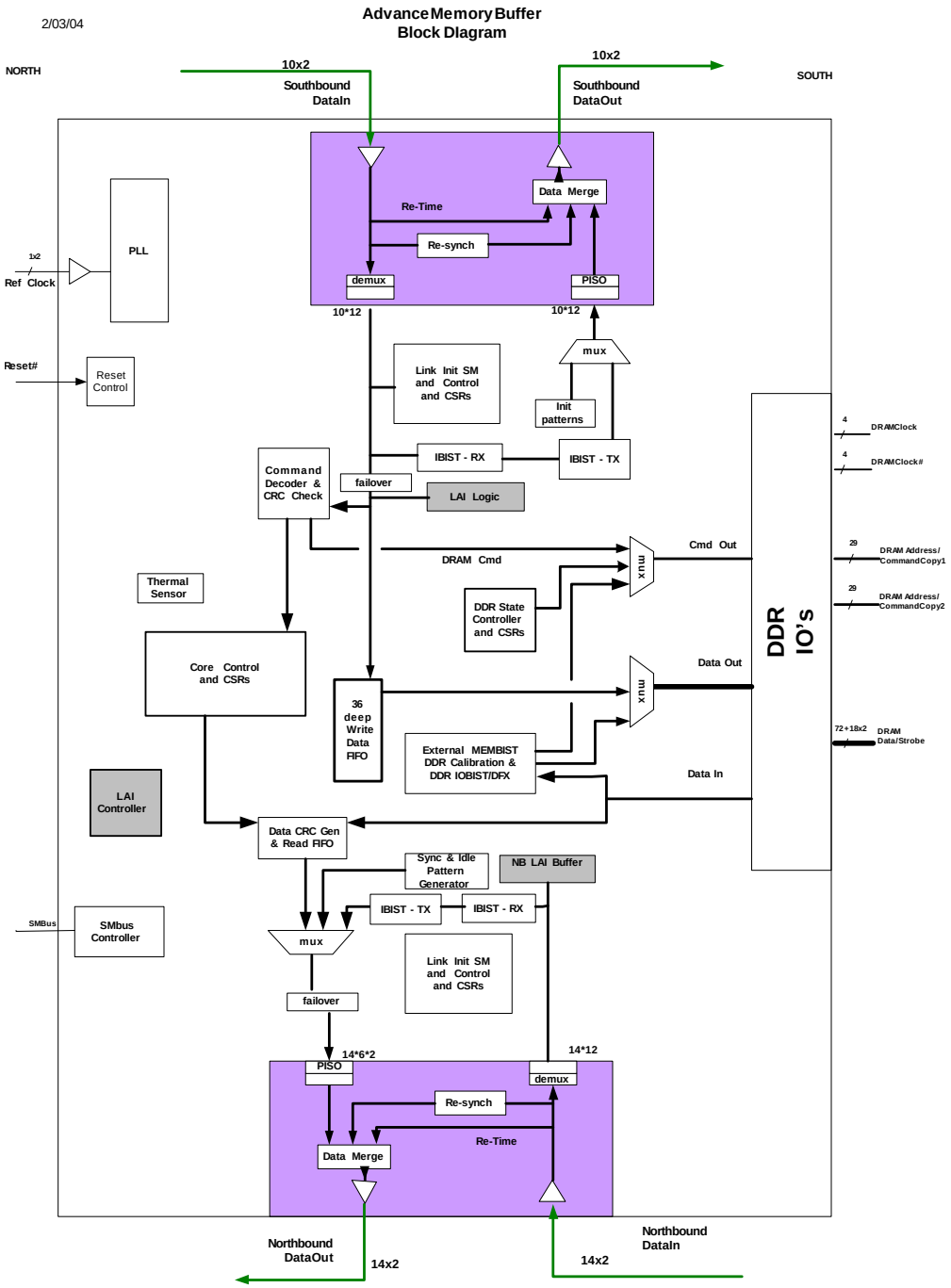

Figure 1.1 — Advanced Memory Buffer Block Diagram

1.4 Interfaces

Figure 1.2 illustrates the Advanced Memory Buffer and all of its interfaces. They consist of two FBD links, one DDR2 channel and an SMBus interface. Each FBD link connects the Advanced Memory Buffer to a host memory controller or an adjacent FBD. The DDR2 channel supports direct connection to the DDR2 SDRAMs on a Fully Buffered DIMM.

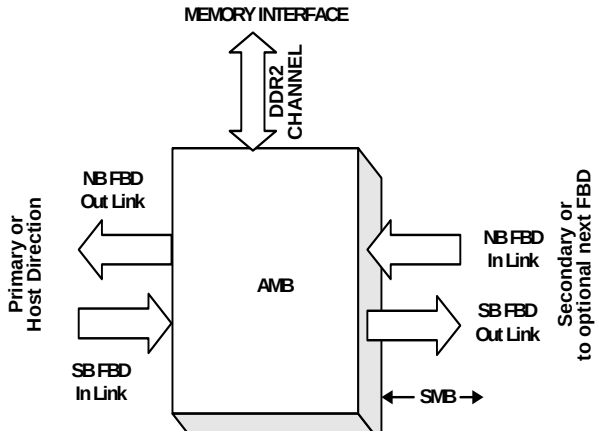

Figure 1.2 — Advanced Memory Buffer Interfaces

1.4.1 FBD High-Speed Differential Point-to-Point Link (at 1.5 V) Interfaces

The Advanced Memory Buffer supports one FBD Channel consisting of two bidirectional link interfaces using high-speed differential point-to-point electrical signaling.

The southbound input link is 10 lanes wide and carries commands and write data from the host memory controller or the adjacent DIMM in the host direction. The southbound output link forwards this same data to the next FBD.

The northbound input link is 13 to 14 lanes wide and carries read return data or status information from the next FB DIMM in the chain back towards the host. The northbound output link forwards this information back towards the host and multiplexes in any read return data or status information that is generated internally.

1.4.2 DDR2 Channel

The DDR2 channel on the Advanced Memory Buffer supports direct connection to DDR2 SDRAMs. The DDR2 channel supports two ranks of eight banks with 16 row/column request, 64 data signals, and eight check-bit signals. There are two copies of address and command signals to support DIMM routing and electrical requirements. Four-transfer bursts are driven on the data and check-bit lines at 800 MHz.

Propagation delays between read data/check-bit strobe lanes on a given channel can differ. Each strobe can be calibrated by hardware state machines using write/read trial and error (or equivalent implementation). Hardware aligns the read data and check-bits to a single core clock.

The Advanced Memory Buffer provides four copies of the command clock phase references (CLK[3:0]) and write data/check-bit strobes (DQSs) for each DRAM nibble.

1.4.3 SMBus Slave Interface

The Advanced Memory Buffer supports an SMBus interface to allow system access to configuration registers independent of the FBD link. The Advanced Memory Buffer will never be a master on the SMBus, only a slave. Serial SMBus data transfer is supported at 100 kHz.

SMBus access to the Advanced Memory Buffer may be a requirement to boot a system. This provides a mechanism to set link strength, frequency and other parameters needed to insure robust operation given platform specific configurations. It is also required for diagnostic support when the link is down.

The SMBus address straps located on the DIMM connector are used by the Advanced Memory Buffer to get its unique ID.

More information is available in the SMBus chapter of this document.

1.5 References

This revision of the *Advanced Memory Buffer Component Specification* is consistent with the following documents:

- *FB DIMM Architecture and Protocol Specification*, [1]
- *FBD Design for Test, Design for Validation (DFx) Specification*, [2]
- *FB4300/5300/6400 DDR2 Fully Buffered DIMM Design Specification*, [3]
- *JEDEC DDR2 SDRAM Specification*, JC 42.3 [4]
- *High Speed Differential Point-to-Point Link at 1.5 V for Fully Buffered DIMM*, [5]
- *System Management Bus (SMBus) Specification Version 2.0 as published by www.smbus.org* [6]
- *Advanced Configuration and Power Interface Specification Version 2.0c as published by www.acpi.info* [7]

1.6 Glossary

Term	Definition
AMB	Advanced Memory Buffer
Chip disable	An ECC encoding specifically tailored for memory such that the data from any defective memory device can be reconstructed from some aggregate of surviving memory devices. Corrects data from failed device. The AMB employs an “x8” ECC, which means that all data from a partially or completely failed 8-bit device can be recovered without stopping the system. This same ECC provides the same level of coverage for 4-bit (“x4”) devices.
DDR	Double Data Rate (SDRAM)
DDR Branch	The minimum aggregation of DDR channels which operate in lock-step to support error correction. Two channels per branch supports x8 chip disable ECC. A rank spans a branch.
DDR Channel	A DDR channel consists of a data channel with 72 bits of data and an ADDR/CNTRL channel
DDR Data channel	A DDR data channel consists of 72 bits of data, divided into 18 data groups
DDR Data group	Each data group consists of 4 data signals and a differential strobe pair

Term	Definition
DIMM	Dual In-Line Memory Module. A packaging arrangement of memory devices on a socketable substrate.
DIMM Slot	Receptacle (socket) for a DIMM. Also, the relative physical location of a specific DIMM on a DDR channel.
DIMM Stack	Dual-ranked x4 DRAM DIMM physical topology: refers to two physical rows of DRAM “stacked” one above another
DRAM Page (Row)	The DRAM cells selected by the Row Address
DPM	Defects per million
DRAM	Dynamic Random Access Memory
ECC	Error Correction Code. For the AMB, this is a chip disable code.
EMI	Electromagnetic interference
FBD Channel	Combination of 10 lane Southbound Links and 13 or 14 lane Northbound Links that make up a logical memory channel from host perspective
FBDIMM	Fully-Buffered DIMM
Frame	Group of bits containing commands or data
HCSL	High-speed Current Steering Logic
Host	Memory controller agent on an FBD channel
ISI	Inter Symbol Interference – see section “Initialization / Clocking” for definition
Mesochronous	Small ppm frequency difference.
NB	Nouth Bound
NBI	Nouth Bound Interface control logic
Northbound	The direction of signals running from the furthest DIMM toward the host.
JEDEC	JEDEC Solid State Technology Association (once known as the Joint Electron Device Engineering Council)
JESD79	JEDEC Standard 79, *DDR SDRAM Specification*
LA	Logic Analyzer
LAI	Logic Analyzer Interface
Lane	Differential pair of receivers or transmitters
Link	High speed parallel Differential Point-to-Point interface
Page Replace aka Page Miss, Row Hit / Page Miss	An access to a row that has another page open. The page must be transferred back from the sense amps to the array, and the bank must be precharged.
Page Hit	An access to an open page, or DRAM row. The data can be supplied from the sense amps at low latency.
Page Miss (Empty Page)	An access to a page that is not buffered in sense amps and must be fetched from DRAM array.
Plesiochronous	Having the same frequency but arbitrary phase differences.

Term	Definition
Primary	In the direction towards the Host controller
PLL	Phase Locked Loop
PTH	Plated Through-Hole
PVT	Process, Voltage and Temperature
Rank	A DIMM is organized as one or two physical sets of memory, called ranks. Note that single rank or dual rank is different from single-sided or double-sided, e.g. a single rank DIMM build from x4 DRAM devices is actually double-sided. It is also common practice to distribute the 9 devices of an x8 DIMM between both sides of the DIMM to enhance the thermal performance of the module. The standard 4-slot DDR2 topology is limited to single rank DIMM due to loading constraints.
RAS	Reliability, Availability, Serviceability
Resample	A resampler is a serial data in and serial data out node that attenuates jitter by regenerating the serial data using a clock recovered from the incoming data stream derived from a common reference clock. It also resets the voltage budget of the retransmitted data.
Resync	A resync repeater is a serial data in and serial data out node that resynchronizes data to a local clock after it has been sampled with a recovered clock derived from a common reference clock. The local clock is also generated from the same reference clock by a PLL multiplier. A drift compensation buffer is inserted between the two clock domains which absorbs the maximum link delay change over worst case voltage and temperature changes only, and not for compensating lane-to-lane skew. Both the jitter and voltage budgets for the retransmitted data are reset.
RPD	Return Path Discontinuity
SDRAM	Synchronous Dynamic Random Access Memory
SB	South Bound
SBI	South Bound Interface control logic
SI	Signal Integrity
Secondary	In the direction away from the Host controller
Serial Present Detect (aka SMBus protocol	A 2-signal serial bus used to read and write control registers in the AMB and SDRAM
SMBus	System Management Bus. Mastered by a system management controller to read and write configuration registers. Limited to 100 kHz.
Southbound	The direction of signals running from the host controller toward the DIMMs.
SSC	Spread Spectrum Clocking. Utilized to lower EMI
SSO	Simultaneously Switching Outputs
SSTL_18	Series Stub Terminated Logic for 1.8V
NB	North Bound
NBI	North Bound Interface control logic

Term	Definition
Throttled	Temporarily prohibiting memory accesses when a thermal or electrical limit has been reached.
Transparent Mode	High speed FBD linked I/Os are bypassed with lower speed CMOS I/Os to allow lower speed tester to control and test DRAMs on the DIMM.
Unit Interval	Average time interval between voltage transitions of a signal
V_{SS}	Ground (0V)
V_{DDQ}	I/O buffer voltage for DDR2 buffers. Nominally 1.8V

2 FBD Channel Interface

2.1 Advanced Memory Buffer Support for FBD Operating Modes

The Advanced Memory Buffer (AMB) may not support all operating modes documented in the *FB-DIMM Architecture and Protocol Specification* [1]. The following list defines which features/modes are supported:

- 14 lane northbound (NB) with and without single lane Fail Over
- 13 lane NB with and without single lane Fail Over
- 10 lane southbound (SB) with and without single lane Fail Over
- Repeater mode
- Transparent mode
- Recalibrate state
- Voltage Margin Test

The following are optional FBD features :

- LAI mode
- 12 lane NB non-ECC
- L0s low power state
- Data mask
- Variable read latency
- Timing Margin Test

2.2 Channel Initialization

Refer to Chapter 3, “Channel Initialization” in the *FB DIMM Architecture and Protocol Specification* [1] for FBD initialization protocol. The reset chapter covers some additional details about the initialization process.

2.3 Channel Protocol

2.3.1 General

Refer to Chapter 4, “Channel Protocol” in the *FB DIMM Architecture and Protocol Specification* [1] for FBD protocol.

2.3.2 Timeouts during TS0

The FBDLOCKTO register is used to help the AMB determine when to give up waiting for individual lanes to bit lock. The NBLINKCFG field is used to communicate when lanes are intentionlly not in use. The BLTOCNT field is used to set a time out on waiting for a lane to bit lock. Lanes not bit locked by this time will be marked as failed.

2.3.3 Recalibrate state considerations

In addition to what the FBD Architecture and Protocol specification describes around Recalibrate State, the AMB further requires that the host be sending NOP commands in at least the 2 frames preceding the exit from recalibrate state.

Requirement: 2 Cycles before the recalibrate counter expires, NOPs must be sent from the host.

Time	Frame Description	Recal Frame Counter
N	Sync with ERC bit set	0
N+1	NOP frame	RECALDUR
N+2	NOP frame	RECALDUR - 1
...	NOP frame	....
N+8	NOP frame	RECALDUR - 7
N+9	NOP frame - host may begin recalibration	RECALDUR - 8
...	.....	....
N + RECALDUR - 7	NOP frame - host must be finished with recalibration	8
...	.....	....
N + RECALDUR - 3	NOP frame	4
N + RECALDUR - 2	NOP frame	3
N + RECALDUR - 1	NOP frame - must be received at AMB without corruption	2
N + RECALDUR	NOP frame - must be received at AMB without corruption	1
0	Valid Sync Frame	0

Recal Frame Counter:	**5**	**4**	**3**	**2**	**1**	**0**
Rx Data:	X	X	X	NOP	NOP	Valid Cmd
where X represents “don’t care” data						

2.3.4 Address Mapping of DDR Commands to DRAMs

DDR2 x4 Config		20	19	18	17	16	15	14	13	12	11	10	9	8	7	6	5	4	3	2	1	0
256Mb (64Mbx4)	Row	1	X	X	RS	X	X	B1	B0	A12	A11	A10	A9	A8	A7	A6	A5	A4	A3	A2	A1	A0
1KB page	Col	0	1	r/w	RS	X	X	B1	B0	X	A11	AP	A9	A8	A7	A6	A5	A4	A3	A2	A1	A0
512Mb (128Mbx4)	Row	1	X	X	RS	A13	X	B1	B0	A12	A11	A10	A9	A8	A7	A6	A5	A4	A3	A2	A1	A0
1KB page	Col	0	1	r/w	RS	X	X	B1	B0	X	A11	AP	A9	A8	A7	A6	A5	A4	A3	A2	A1	A0
1Gb (256Mbx4)	Row	1	X	X	RS	A13	B2	B1	B0	A12	A11	A10	A9	A8	A7	A6	A5	A4	A3	A2	A1	A0
1KB page	Col	0	1	r/w	RS	X	B2	B1	B0	X	A11	AP	A9	A8	A7	A6	A5	A4	A3	A2	A1	A0
2Gb (512Mbx4)	Row	1	X	A14	RS	A13	B2	B1	B0	A12	A11	A10	A9	A8	A7	A6	A5	A4	A3	A2	A1	A0
1KB page	Col	0	1	r/w	RS	X	B2	B1	B0	X	A11	AP	A9	A8	A7	A6	A5	A4	A3	A2	A1	A0
4Gb (1Gbx4) *	Row	1	A15	A14	RS	A13	B2	B1	B0	A12	A11	A10	A9	A8	A7	A6	A5	A4	A3	A2	A1	A0
1KB page	Col	0	1	r/w	RS	X	B2	B1	B0	X	A11	AP	A9	A8	A7	A6	A5	A4	A3	A2	A1	A0
4Gb (1Gbx4) *	Row	1	X	A14	RS	A13	B2	B1	B0	A12	A11	A10	A9	A8	A7	A6	A5	A4	A3	A2	A1	A0
2KB page	Col	0	1	r/w	RS	X	B2	B1	B0	A12	A11	AP	A9	A8	A7	A6	A5	A4	A3	A2	A1	A0

DDR2 x8 Config		20	19	18	17	16	15	14	13	12	11	10	9	8	7	6	5	4	3	2	1	0
256Mb (32Mbx8)	Row	1	X	X	RS	X	X	B1	B0	A12	A11	A10	A9	A8	A7	A6	A5	A4	A3	A2	A1	A0
1KB page	Col	0	1	r/w	RS	X	X	B1	B0	X	X	AP	A9	A8	A7	A6	A5	A4	A3	A2	A1	A0
512Mb (64Mbx8)	Row	1	X	X	RS	A13	X	B1	B0	A12	A11	A10	A9	A8	A7	A6	A5	A4	A3	A2	A1	A0
1KB page	Col	0	1	r/w	RS	X	X	B1	B0	X	X	AP	A9	A8	A7	A6	A5	A4	A3	A2	A1	A0
1Gb (128Mbx8)	Row	1	X	X	RS	A13	B2	B1	B0	A12	A11	A10	A9	A8	A7	A6	A5	A4	A3	A2	A1	A0
1KB page	Col	0	1	r/w	RS	X	B2	B1	B0	X	X	AP	A9	A8	A7	A6	A5	A4	A3	A2	A1	A0
2Gb (256Mbx8)	Row	1	X	A14	RS	A13	B2	B1	B0	A12	A11	A10	A9	A8	A7	A6	A5	A4	A3	A2	A1	A0
1KB page	Col	0	1	r/w	RS	X	B2	B1	B0	X	X	AP	A9	A8	A7	A6	A5	A4	A3	A2	A1	A0
4Gb (512Mbx8) *	Row	1	A15	A14	RS	A13	B2	B1	B0	A12	A11	A10	A9	A8	A7	A6	A5	A4	A3	A2	A1	A0
1KB page	Col	0	1	r/w	RS	X	B2	B1	B0	X	X	AP	A9	A8	A7	A6	A5	A4	A3	A2	A1	A0
4Gb (512Mbx8) *	Row	1	X	A14	RS	A13	B2	B1	B0	A12	A11	A10	A9	A8	A7	A6	A5	A4	A3	A2	A1	A0
2KB page	Col	0	1	r/w	RS	X	B2	B1	B0	X	A11	AP	A9	A8	A7	A6	A5	A4	A3	A2	A1	A0

2.3.5 FBD L0s State

The L0s state provides a low latency power down state for the FBD channel. The L0s state will nominally last for 41 frame times such that no sync packets are missed. The actual amount of time is programmable in the AMB. Times greater than 41 frames are not supported at this time. The L0s state may be used when the memory controller is throttling, and producing no transfers.

The duration of the L0s state is pre-programmed into the MC and AMB registers, and is triggered by a sync command with the L0s command indicated. The basic sequence is:

L0 to L0s Transition

- MC issues L0s command in the SYNC command.
- The MC continues sending one additional command, which is a NOP.
- AMB must gate its inputs and stop accepting commands following the NOP. It need not accept and decode the NOP itself.
- Southbound output drivers and input receivers are disabled following the NOP. The turnoff may be staggered for power supply di/dt reduction.
- Northbound channels are shut down following the status packet corresponding to the sync command.
- AMB takes CKE low to all DRAMs and floats the commands and address bus to the DRAMS (all signals except clock, CKE, and ODT).
- The PLL is never powered down before, during, or after the transition.

L0s to L0 Transition

- When the timer expires, interface must be fully functional and ready to receive the sync command. The turning on of circuits occurs the proper amount of time prior to the timer expiring, and is an implementation detail of the AMB.
- Southbound channel begins power-up. The drivers must begin driving a valid state one clock prior to the NOP below.
- The AMB drives command and address lines, and restores CKEs to their previous state with appropriate timing to be able to process a DRAM command which is received on the clock following the sync command.
- MC sends a NOP on the clock prior to the timer expiring. The receiver need not accept and decode the NOP itself.
- MC sends a sync command on the clock that the timer expires.
- Normal commands may commence.
- Northbound lanes are brought back in a similar manner to southbound lanes, but are timed to be able to successfully send the status packet response for the sync command.

Note: DRAM pages need not be closed during the power down, but any DRAM with open pages will consume additional power. This is solely a function of the MC policy.

Note: Upon return to L0, the MC may place the bus back into L0s by issuing another L0s command in the sync command.

2.4 Reliability, Availability, and Serviceability

2.4.1 General

Refer to Chapter 5, “Reliability, Availability and Serviceability” in the *FB DIMM Architecture and Protocol Specification* [1] for FBD RAS requirements.

2.4.2 Channel Error Detection and Logging

See “Errors” chapter for details on the error handling.

2.5 Channel Configuration

2.5.1 Re-sync and Resample Modes

A separate control is available for both the NB and SB FBD links to select between lower latency re-sample and lower jitter re-sync modes for repeating received data. Selection between these two modes is a function of platform design and configuration and should be set by BIOS prior to link initialization

The FBDSBCFGNXT.SBRESYNCEN and FBDNBCFGNXT.NBRESYNCEN bits make this selection.

Descriptions of these two modes follows.

2.5.1.1 Accumulated Tracking Effects (Re-Sample Mode)

Each AMB acts as a repeater for the FBD channel. Since the data driven from each DIMM to the next DIMM may experience random or periodic phase shifts, the affect of these phase shifts must be accommodated in the design. Consider a system with three DIMMs daisy-chained together. A phase shift generated in the first DIMM will be seen by the second DIMM but will not be immediately propagated to the third DIMM. Unlike an analog buffer, the phase shift is not automatically driven to subsequent DIMMs since the data driven to the subsequent DIMMs is re-sampled in the AMB to reduce jitter. The lowest latency implementation would use the derived clock to retransmit the outbound signal. The second DIMM will see the phase shift as a slight change in the position of the data eye at its receiver. The clock tracking loop filter in the second DIMM will measure several bit cells and may eventually

determine that it should adjust the phase of its derived clock to capture the data closer to the center of the new data eye location. Only when the second DIMM makes its phase change will the effect propagate to the third DIMM. More detail of the data sampling technique may be found in the “High Speed Differential Point-to-Point Link at 1.5V for Fully Buffered DIMM Specification”.

2.5.1.2 Accumulated Tracking Effects (Re-Sync Mode)

An alternative implementation would place a voltage/thermal (VT) drift compensation buffer between the receiver and the transmitter section of the AMB IO cell. The drift compensation buffer would re-synchronize the signal with a multiple of the reference clock. This buffer would have to be deep enough to handle the absolute magnitude of delay change of the daisy-chain channel over voltage and temperature. More detail of the data sampling technique may be found in the “High Speed Differential Point-to-Point Link at 1.5V for Fully Buffered DIMM Specification”.

2.5.2 Other Channel Configuration Modes

Other channel electrical configuration parameters that should be set up prior to link initialization include

- Link frequency (LINKPARNXT.CFREQ)
- SB Transmitter drive current (FBDSBCFGNXT.SBTXDRVCUR)
- SB Transmitter de-emphasis values (FBDSBCFGNXT.SBTXPREEMP)
- NB Transmitter drive current (FBDNBCFGNXT.NBTXDRVCUR)
- NB Transmitter de-emphasis values (FBDNBCFGNXT.NBTXPREEMP)

The parameters contained in these registers are described more completely in the “High Speed Differential Point-to-Point Link at 1.5V for Fully Buffered DIMM Specification”.

Additional channel configuration registers that should be set up prior to link initialization include

- First 6 bytes of the SPD parameter registers
  PERSBYTE[5:0]
- FBD Bit Lock Time Out Register (FBDLOCKTO)

2.5.3 Lane to Lane Skew on a Channel

The FBD Channel is expected to support a maximum skew of upto 46UI. The deskew buffers on an individual AMB need to be able to support this amount of accumulated skew. The actual skew observed will be a function of the skew introduced by platform layout, DIMM layout, the number of active AMBs in the channel and skew introduced by AMBs.

2.6 Repeater Mode

The AMB may also be used as an FBD link repeater to extend distances at which links can operate. This mode can be automatically set by the BFUNC and SA pins. In this mode, the AMB functions in the same way as a regular DIM with the exception that DRAM commands are not supported.

Link behavior is the same as for normal DIMMs

- Participates in link initialization like a normal DIMM
- Responds to Reads and Writes to AMB configuration registers,
- status is returned in response to Sync commands,
- link errors are detected and alerts generated,

SMBus access is the same except for the base Slave address is different than from normal DIMM.

Slave address[6:3] = 4’b0011 for Repeaters, instead of

Slave address[6:3] == 4’b1011 for normal DIMMs

2.7 Performance

This section describes the performance characteristics of FBD: idle memory read latencies, loaded memory read latencies, channel throughput, and system memory capacity.

2.7.1 Idle Memory Read Latency

Memory read latency is an important factor in system level performance. Processor and I/O devices are often blocked from doing other work when reading from memory, until their read requests are satisfied. Therefore, minimizing the amount of time that it takes to satisfy a read request can increase the amount of work that a processor or I/O device can perform. This can improve overall system or benchmark performance.

Memory read latency (also referred as loaded memory read latency) consists of two components: idle memory read latency and queuing delays for various resources such as the front-side bus, memory controller queues, etc. Idle memory read latency is the latency of only one transaction running in the entire system, and is the least amount of latency that is possible for a read transaction. The following sections describe how to measure the FBD channel latency, as well as the overall system latency.

2.7.1.1 FBD Channel Latency

FBD channel latency is measured from the time a read request is driven on the FBD channel pins to the time when the first 16 bytes (2nd chunk) of read completion data is sampled by the memory controller.

When not using the Variable Read Latency capability, the latency for a specific FBD DIMM on an FBD channel is always equal to the latency for any other FBD DIMM on that channel. However, the latency for each FBD DIMM in a specific configuration with some number of FBD DIMMs installed may not be equal to the latency for each FBD DIMM in a configuration with some different number of FBD DIMMs installed.

As more DIMMs are added to the FBD channel, additional latency is required to read from each DIMM on the channel. Because the FBD channel is based on the point-to-point interconnection of buffer components between DIMMs, memory requests are required to travel through N-1 buffers before reaching the Nth buffer. The result is that a 4 DIMM channel configuration will have greater idle read latency compared to a 1 DIMM channel configuration.

The Variable Read Latency capability can be used to reduce latency for DIMMs closer to the host.

The idle latencies listed in this section are representative of what might be achieved in typical AMB designs. Actual implementations with latencies less than the values listed will have higher application performance and vice versa.

The following table shows typical idle read latency, using DDR2 667 (4-4-4) DRAM technology (for a page empty read). Actual values depend on platform board and DIMM routing, AMB timing specs, DRAM characteristics, etc.

Table 2.1 — Example FBD-667 Channel Idle Memory Read Latencies

DIMMs per Channel	Typical Latencies
1	43-47 ns
2	49-53 ns
3	52-56 ns
4	58-62 ns

Table assumptions:

- Measure from latest valid SB output pin at host to latest valid NB input pin at host
- Includes 4UI serialization delay SB (A slot command) and 12 UI serialization delay NB
- Routing delay of 850ps from host to first DIMM and 600ps DIMM to DIMM
- 4-4-4 SDRAM Access Timing (24ns) plus 400ps Tdqsck
- On-DIMM Clk and DQS propagation delays of 800ps
- FBD SB Cmd In to DDR Clk out that Latches Cmd Out of 8.1ns +/- 1ns
- DDR Read Data In to FBD NB Out (last DIMM) of 5ns +/- 1ns
- Resample cross AMB delays of 1.25ns and Resync pass thru delays of 2.25ns
- First AMB in Resync and other AMBs in Resample mode

2.8 AMB Components of Channel Latency

The critical elements that AMB contributes to the latency calculation are the chip crossing delays.

- Southbound latency contributions
  - Delay from an input FBD link transaction to commands on the DDR interface and
  - Pass-thru delay of forwarded Southbound FBD transactions.
- Northbound latency contributions
  - Delay from DDR Read data input on the last DIMM to FBD link transactions and
  - Pass-thru delay of forwarded Northbound FBD transactions back towards the host.

These timing delay values are documented in Chapter 4, “Electrical, Power, and Thermal.”

2.8.1 Command to Data Delay Calculation

Figure 2.1 shows the various components that make up the over all delay through an AMB for a memory command.

Figure 2.1 — Delays Through an AMB

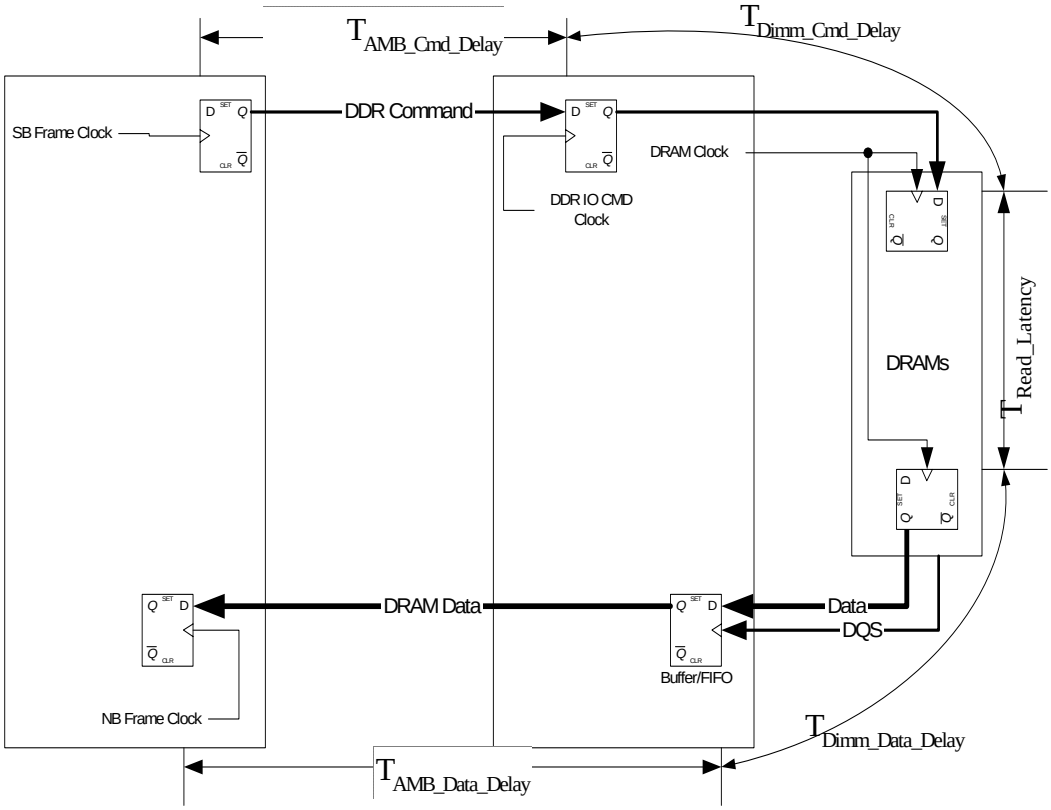

The definition for terms used in Figure 2.1 are given below.

- UI: This is the unit interval on the FBD link. This is same as the period of the FBD link bit-rate clock.
- NB: Northbound
- SB: Southbound
- $T_{Read_Latency}$: DRAM Parameter. $T_{CAS} + T_{Additive_Latency}$
- $T_{AMB_Cmd_Delay}$: This value is very specific to an AMB implementation. This is the time it takes for the FBD command to be transferred from the point at which a deskewed and frame aligned command is available to core to the DDR IO Cluster. This includes any differences between the FBD frame clock and the DDR IO clock that latches the command into the DDR IO cluster. This can be different for different DRAM frequencies.
- $T_{AMB_Data_Delay}$: This value is very specific to an AMB implementation. This is the minimum time it takes for the data that is returned from the DRAMs to be transferred from the DDR IO cluster to the FBD IO for transmission on the link. This includes any buffering and clocking delays for the data within the chip. This can be different for different DRAM frequencies.
- $T_{Dimm_Cmd_Delay}$: This includes the delays for the command through the DDR IO cluster, differences between DDR IO CMD Clock and DRAM clock, any routing delays for the clock and command on the DIMM and any set-up and hold-times in the AMB and the DRAMs.
- $T_{Dimm_Data_Delay}$: This includes the routing delays for the data and strobes from the DRAM to the AMB, skews between the DRAMs, delays through the DDR IO cluster and any set-up and hold-times in the AMB and DRAMs.
- $T_{CMD_To_Data}$: This is equal to ($T_{Read_Latency} + T_{AMB_Cmd_Delay} + T_{Dimm_Cmd_Delay} + T_{Dimm_Data_Delay} + T_{AMB_Data_Delay}$). This can be specified with 1UI granularity. This will be different for each DRAM type. It does not include any delays inside the IO to deskew and frame align the incoming data on the SB side nor does it include the delays inside the NB IO on the transmit side.

The TCAS and TAdditive_Latency are specified in the DRC register (DRC.cl and DRC.al). The AL and CL values are latched from the DRC register during TS2's to establish TRead_Latency . Later changes to AL and CL do not take effect for link data return timing until the next link reset.

The CMD2DATANXT register is initialized with a value equal to ($T_{CMD_To_Data}$ - $T_{Read_Latency}$). This value of CMD2DATANXT is specified in the SPD EEPROM. All AMBs are expected to receive the data from the DRAMs with the calculated value of $T_{CMD_To_Data}$.

All AMBs power up with a default value of 5 for $T_{CMD_To_Data}$. This can be done either by setting the default values of DRC.CL and DRC.AL or by setting the default value of the CMD2DATACUR.FRMS to be 5. The AMBs must be able to return status and configuration register reads with this default timing. This will enable the BIOS to initialize the proper values from SPD.

The following simplified timing diagram illustrates how the last AMB uses the values specified in DRC.CL, DRC.AL, CMD2DATANXT.DLYFRMS and CMD2DATANXT.DLYFRAC.

Figure 2.2 — Command to Data Delay timing

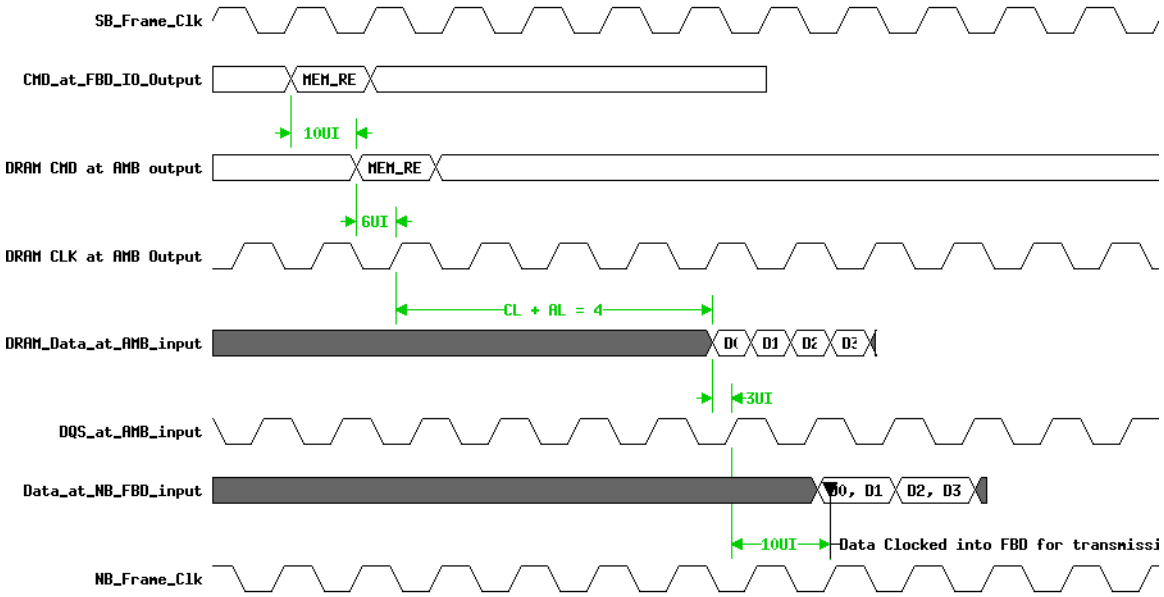

In Figure 2.2, it is assumed that there are no routing delays on the DIMM itself. The command takes 10UI to get from SB FBD to the DDR IO ($T_{AMB_Cmd_Delay}$). This includes time it takes to validate CRC of the frame and to decode the command. It is assumed DDR_IO_Cmd_Clk shown in Figure 2.1 is delayed from the SB_Frame_Clk by 10 UI. The DRAM SCLK is placed at the center of the command window which adds an additional 6UI of delay. The DRAMs are programmed with a $T_{Read_Latency}$ of 4. The DQS strobes are centered when they get to the AMB (3UI delay) and the data takes an additional 10 UI to propagate from the DDR IO to the NB FBD IO (including setup time at NB FBD and CRC generation) before it can be clocked into the NB FBD for transmission. The total delay without including the DRAM access time in this case is (10 + 6 + 3 + 10UI) 29UI. The CMD2DATANXT.DLYFRMS will be programmed with a value 2 and the CMD2DATANXT.DLYFRAC with 5UI. If the AMB supports only a 2UI granularity, then the values should be 2 frames and 6UI respectively. If an AMB does not support sub-frame delays, it is expected that the value in SPD will be round up the to the nearest frame. Any additional delays caused by rounding up should be supported by additional buffering in the DDR IO.

The above figure shows the last arriving data from the DDR. It is expected that any data arriving earlier than this, due to differences in routing, etc. is buffered up in some way inside the DDR IO. The expectation is that all AMBs (last and intermediate) unload the data from the DDR IO with the timing specified by the $T_{CMD_To_DATA}$. The Last AMB

is expected to be able send data on the NB links with no additional delay added, if C2DINCRCUR.INCRDLY is 0. Any additional delay needed due to the value programmed in C2DINCRCUR.INCRDLY register in the last AMB or to delay the data in intermediate AMB before the merge, is handled by FIFOs in the AMB core.

In the above figure, it is assumed that the AMB can place the clocks in position shown above. If this is not the case, then additional delays due to non-optimal placement of the clocks should be taken into account to calculate the total delay to be programmed into the SPD.

2.8.2 Channel Throughput

2.8.2.1 Peak Theoretical Throughput

An FBD channel transfers read completion data on the FBD Northbound data connection. 144 bits of data are transferred for every FBD Northbound data frame. This matches the 18-byte data transfer of an ECC DDR DRAM in a single DRAM command clock. A DRAM burst of 8 from a single channel or a DRAM burst of four from two lock-stepped channels provides a total of 72 bytes of data (64 bytes plus 8 bytes ECC).

The FBD frame rate matches the DRAM command clock because of the fixed 6:1 ratio of the FBD channel clock to the DRAM command clock. Therefore, the Northbound data connection will exhibit the same peak theoretical throughput as a single DRAM channel. For example, when using DDR2 533 DRAMs, the peak theoretical bandwidth of the Northbound data connection is 4.267 GB/sec.

Write data is transferred on the FBD Southbound command and data connection, via Command+Wdata frames. 72 bits of data are transferred for every FBD Command+Wdata frame. Two Command+Wdata frames match the 18-byte data transfer of an ECC DDR DRAM in a single DRAM command clock. A DRAM burst of 8 transfers from a single channel, or a burst of 4 from two lock-step channels provides a total of 72 bytes of data (64 bytes plus 8 bytes ECC).

When the FBD frame rate matches the DRAM command clock, the Southbound command and data connection will exhibit one half the peak theoretical throughput of a single DRAM channel. For example, when using DDR2 533 DRAMs, the peak theoretical bandwidth of the Southbound command and data connection is 2.133 GB/sec.

The total peak theoretical throughput for a single FBD channel is defined as the sum of the peak theoretical throughput of the Northbound data connection and the Southbound command and data connection. When the FBD frame rate matches the DRAM command clock, this is equal to 1.5 times the peak theoretical throughput of a single DRAM channel. For example, when using DDR2 533 DRAMs, the peak theoretical throughput of a DDR2 533 channel would be 4.267 GB/sec, while the peak theoretical throughput of an FBD-533 channel would be 6.4 GB/sec

3 DDR Interface

3.1 Advanced Memory Buffer DDR Interface Overview

The DDR interface on the Advanced Memory Buffer consists of:

- A command decoder.
- A FIFO write buffer to hold the write data before it is written to the DDR channel. The write FIFO buffer has 36 entries of 72 bits (36 x 72b). A maximum of 35 entries can be used to store DDR bursts. Write data targeted for other Advanced Memory Buffer parts on the channel will use three of the 35 entries until the target Advanced Memory Buffer is known. The write FIFO buffer fills at half of the DDR data rate, and empties at the DDR data rate. The write FIFO buffer must support an invalidate write FIFO command (FBD Soft Reset command).
- A FIFO read buffer to hold the read data so that each DIMM returns data with the same latency as the southernmost DIMM in the chain. Latency is measured in increments of core clock periods. The core clock runs at the DDR command clock rate (half the data rate frequency). The latency through the FIFO read buffer on the southernmost DIMM is expected to be zero.
- A DDR cluster which serves as a DIMM buffer by registering outbound commands and data at output flops. The cluster also captures and levelizes incoming read data.
- A reset FSM which puts the DIMM in self-refresh when reset is asserted, and exits self-refresh when reset is deasserted and southbound frame training is complete.
- A calibration FSM that automatically sets the timing for DQS receiver enable and DQS delay or equivalent DDR timing control mechanism.
- A configuration register set to allow software to issue DRAM power up and DRAM MRS/EMRS commands. These registers are accessible through FBD channel commands and the SMBUS interface.
- "Burst Write Interrupt" is not supported.

3.2 Data Mapping

See the protocol chapter of the *FB DIMM Architecture and Protocol Specification* for the mapping between data in DDR DRAM devices and data in FBD frame formats for 4-bit and 8-bit devices.

3.2.1 Data Mask

Data mask is supported for non-ECC (64-bit) DIMMs only. The AMB is required to support data mask if it supports non-ECC DIMMs.

Non-ECC DIMMs using x4 DRAMs are not supported by the standard AMB pinout, as there are not adequate data mask pins available. 16 data mask pins would be required for proper load matching.

The data mask signals share pins with the DQS[16:9] pins. This puts them in the proper place on the package and die to be matched with the timing of the appropriate DQ pins. DQS#[16:9] are not used in this mode. The following table shows the mapping between DQS pins and data mask pins.

Data Lane	Signal	x4 Usage	Non-ECC Usage	x8 or x16 ECC Usage
DQ[7:0]	DQS[9]/DM0	DQS[9]	DM0	Not used
DQ[15:8]	DQS[10]/DM1	DQS[10]	DM1	Not used
DQ[23:16]	DQS[11]/DM2	DQS[11]	DM2	Not used
DQ[31:17]	DQS[12]/DM3	DQS[12]	DM3	Not used
DQ[39:32]	DQS[13]/DM4	DQS[13]	DM4	Not used
DQ[47:40]	DQS[14]/DM5	DQS[14]	DM5	Not used
DQ[55:48]	DQS[15]/DM6	DQS[15]	DM6	Not used
DQ[63:56]	DQS[16]/DM7	DQS[16]	DM7	Not used
DQ[71:64]	DQS[17]	DQS[17]	Not used	Not used
As above	DQS[17:9]#	DQS[17:9]#	Not used	Not used

An AMB in non-ECC mode implies the following:

- 12 lane Northbound mode
- There is no Northbound fail-over mechanism.
- Data Mask Capability.
- Southbound write data frames use the Data Mask version of the frame format.
- 10 lane Southbound with fail-over capability.
- x4 DRAMs are not supported by the standard AMB pinout.

For AMB silicon that supports both ECC and non-ECC modes, there is no strapping signal to indicate which DIMM type it is installed on. The AMB will use the information in the configuration state, transferred from the host in the TS3 packet to determine ECC or non-ECC mode. If programmed for 12-bit northbound mode non-ECC mode is used. If programmed into 14-bit, 14-bit Fail Over, 13-bit, or 13-bit Fail Over modes, ECC mode is used. The host will determine the type of DIMM by reading the SPD.

3.3 Command / Address Outputs

The DDR2 command and address signals are terminated to 0.9V on the DIMM. In order to reduce power, this termination is performed using series resistors to a Vtt power supply, which is generated by voltage regulators on the system board and provided to the DIMM via connector pins. This power supply must be capable of sourcing and syncing current.

Two sets, or copies, of DRAM command and address output pins are provided for loading and timing considerations. Each set drives the same DRAM commands, but the two address busses are inverted from each other in order to reduce power consumption and heat produced on the DIMM. The command and address output pin behavior is detailed below:

1. Minimum address toggling. The address associated with the last command issued on the DRAM bus is retained during DRAM NOP/Deselect commands. The address and bank bits do not revert to all 1's (or all 0's) when the command bus is idle.
2. Balanced bank and address busses. With some exceptions, the bank and address busses on the two bus copies are inverted from each other. This minimizes the current load on the V_{TT} supply regulator because the balanced address bus sinks as much current as it sources. There are exceptions to the inversion behavior to allow for commands that use one or more address bits to control DRAM functionality. Balancing can also be disabled by setting the DRC.BALDIS register field.

Balancing Exceptions:

a. Address bit A10 is not balanced during all read, write, and precharge commands.

b. No address or bank bits are balanced during any MRS and EMRS commands.

c. Some MEMBIST operations that are pattern specific. Note that this will limit the number of DIMMs that may run MEMBIST simultaneously.

d. No address or bank bits are balanced during any command when the DRC.BALDIS register field is set.

3. Balanced idle command bus. When the command bus is idle, a deselect command is issued with all chip selects high and all RAS/CAS/WE signals driven low on both command/address copies.

4. Command/Address output control with CKE. All command and address pin outputs, except for ODT, CKE, and CLK, will float one DRAM clock cycle after both CKE pins transition from high to low. The command/address pins will be driven to valid signal levels on the same cycle that either CKE pin is driven from low to high.

5. Output control during link reset (i.e., fast reset). When the Advanced Memory Buffer core logic is in reset, CKE and ODT will be driven low, and CLK will run at normal levels and frequency. The remaining command/address pins will float during reset.

6. Command/Address output control in S3 mode. When the Advanced Memory Buffer core logic is in S3 power mode, all command/address outputs, including CKE, ODT, CLK, and all other command/address pins, will be driven low. In S3 mode, 1.8V supply is on. 1.5V, Vtt, and 3.3V are off. DRAMs are in self refresh, and the CKE signals must be driven low.

7. CSR output control of command/address. All command/address pin outputs will float when the appropriate DRC bits are set. Setting the DRC.CADIS field will float the RAS, CAS, WE, Bank, and Address pins. DRC.CSDIS controls the chip select pins. DRC.ODTDIS, DRC.CKEDIS, and DRC.CLKDIS float the ODT, CKE, and clock pins respectively.

3.3.1 CKE Output Control

During normal operation the CKE outputs can be controlled directly with dedicated FBD channel commands and with configuration register writes to the DRC.CKEN0/1 CSR's. Channel commands that affect the CKE outputs are reflected in the DRC.CKEN0/1 CSR's. During channel fast reset events the self-refresh FSM controls the CKE outputs, as well as all other command/address outputs.

3.3.2 Memory Controller / BIOS requirements

The memory controller must take care to not issue multiple MRS/EMRS commands to multiple DIMMs simultaneously in rapid succession if the Vtt supply cannot handle the current.

The memory controller may also be required to limit the number of DIMMs in MEMBIST mode at the same time. Vdd power supply and thermal limitations may also put a limit on how many DIMMs may be in MEMBIST at one time. These will be system dependent.

3.4 DQS IO and DM Outputs

Advanced Memory Buffer sends and receives source synchronous differential strobes (DQS) to transfer data (DQ/CB) during write and read DRAM transactions. DQS9 through DQS17 also support the data mask (DM) function in x8 mode. Setting the MTR.WIDTH configuration register enables x8 mode. When driving DM, the timing of the transition from floating, to driving, and back to floating is unchanged, but DQS[17:9] do not toggle and instead drive a constant level. DQSP[17:9] drive low and DQSN[17:9] drive high. In x8 mode DQS[17:9] are not used to capture read data. The table below lists which DQS signals are associated with which DQ/CB pins in x8 and x4 mode.

Table 3.1 — DQS association with DQ/CB pins in x8 and x4 mode.

DQS pin	x4 Mode: MTR.WIDTH=0		x8 Mode: MTR.WIDTH=1	
	Output Function	Input/Output Data Mapping	Output Function	Input/Output Data Mapping
DQS17	Write DQS	CB[7:4]	DM	N/A
DQS8	Write DQS	CB[3:0]	Write DQS	CB[7:0]
DQS16	Write DQS	DQ[63:60]	DM	N/A
DQS7	Write DQS	DQ[59:56]	Write DQS	DQ[63:56]
DQS15	Write DQS	DQ[55:52]	DM	N/A
DQS6	Write DQS	DQ[51:48]	Write DQS	DQ[55:48]
DQS14	Write DQS	DQ[47:44]	DM	N/A
DQS5	Write DQS	DQ[43:40]	Write DQS	DQ[47:40]
DQS13	Write DQS	DQ[39:36]	DM	N/A
DQS4	Write DQS	DQ[35:32]	Write DQS	DQ[39:32]
DQS12	Write DQS	DQ[31:28]	DM	N/A
DQS3	Write DQS	DQ[27:24]	Write DQS	DQ[31:24]
DQS11	Write DQS	DQ[23:20]	DM	N/A
DQS2	Write DQS	DQ[19:16]	Write DQS	DQ[23:16]
DQS10	Write DQS	DQ[15:12]	DM	N/A
DQS1	Write DQS	DQ[11:8]	Write DQS	DQ[15:8]
DQS9	Write DQS	DQ[7:4]	DM	N/A
DQS0	Write DQS	DQ[3:0]	Write DQS	DQ[7:0]

3.5 Refresh

3.5.1 Self-Refresh During Channel Reset

The Advanced Memory Buffer is required to manage DRAM refresh during channel resets and when refresh is enabled through the DAREFTC CSR. When a channel reset event is detected, the Advanced Memory Buffer will take the DRAM's from an unknown state and put them into self-refresh mode. The Advanced Memory Buffer does not track the DRAM state during normal operation, and so has a single process for getting from any DRAM state starting point to the self-refresh state.

When a reset event is detected, the Advanced Memory Buffer's self-refresh FSM will execute the following steps:

1. Clear the DAREFTC.AREFEN CSR to stop the Advanced Memory Buffer auto-refresh engine if enabled.
2. Block all DRAM commands, except those initiated by the self-refresh FSM.
3. Wait until any in-process read or write commands complete, with a minimum wait time of DSREFTC.TCKE, the DRAM "Minimum CKE pulse width time" specification. In-process reads/writes must complete to ensure that the DRAM ODT control outputs are driven low. The minimum time allows for the case where self-refresh entry or power-down entry was executed just before the channel reset.
4. Assert both CKE output pins by setting the DRC.CKE0/1 CSR fields. This will have no effect on the DRAM's if the CKE pins were already asserted.
5. Wait DSREFTC.TXSNR, the DRAM's "Exit self-refresh to a non-read command" specification, to allow any in process DRAM command to complete. This allows time to complete any command that may have been issued just before the channel reset event, such as an auto-refresh, as well as allows for self-refresh exit that may have been initiated when the self-refresh FSM asserted the CKE pins high.
6. Issue a "precharge all" command to both ranks. This guarantees that the DRAM's will be in an "idle" state.
7. Wait as required by DSREFTC.TRP, the DRAM "Precharge time."
8. Issue an auto-refresh command to both ranks. This meets the DRAM requirement that at least one auto-refresh command is issued between any self-refresh exit to self-refresh entry transition.
9. Wait as required by DAREFTC.TRFC, the DRAM "Refresh to active/refresh command time."
10. Issue a self-refresh entry command to both ranks.

When the channel comes out of "fast reset" (exiting the FBD link disable state), the Advanced Memory Buffer will automatically issue a self-refresh exit command to both ranks after the FBD Link Testing State is reached and the Advanced Memory Buffer core clock is stable. Note that this does not apply when the DISSREXIT bit is set as it should be when the Advanced Memory Buffer is powering up, when exiting S3 mode, or when exiting a channel reset that is a part of powering up or exiting S3 mode.

3.5.2 Automatic Refresh

The Advanced Memory Buffer has a refresh FSM for issuing auto-refresh commands to the DRAM's on regular intervals. This can be enabled when the DRAM bus is otherwise idle, but not during any other mode that generates DRAM commands, including DRAM power up and initialization, DDR I/O calibration, and normal operation where the FBD channel issues DRAM commands. The DAREFTC CSR controls the refresh interval and period.

3.6 Back to Back Turnaround Time

The host controller is required to observe a turnaround time on the DRAM data pins within a DIMM when switching between read and write cycles, and when switching from reads from one rank vs. the other rank on the DIMM. The nominal turnaround time is one clock for each parameter, which is the minimum time required to prevent a collision of the postamble of the first transaction and preamble of the second transaction. Additional clocks may be required by the DIMM, especially at higher speeds.

The three timing parameters are:

- Read to write turnaround time. The number of additional DRAM clocks in which the DRAM data bus must be idle between a read from either rank and a write cycle to either rank.
- Write to read turnaround time. The number of additional DRAM clocks in which the DRAM data bus must be idle between a write to one rank and a read from either rank. The write to read turnaround time to the same rank will generally dominated by the tWTR specification, which must also be observed.
- Read to read turnaround time. The number of additional DRAM clocks in which the DRAM data bus must be idle between a read from one rank and a read from the opposite rank.

These parameters are dependent on the AMB design and the DIMM PC board layout. The parameters are stored in the SPD. Each parameter is a 2 bit field allowing 0 to 3 additional clocks of turnaround time. See the *SPD Specification* for additional details.

Figure 1 shows the nominal turnaround times, with no additional clocks. Note that the DQS preamble and postamble may merge slightly when the first transaction is at worst case timings and the second transaction is at best case timings.

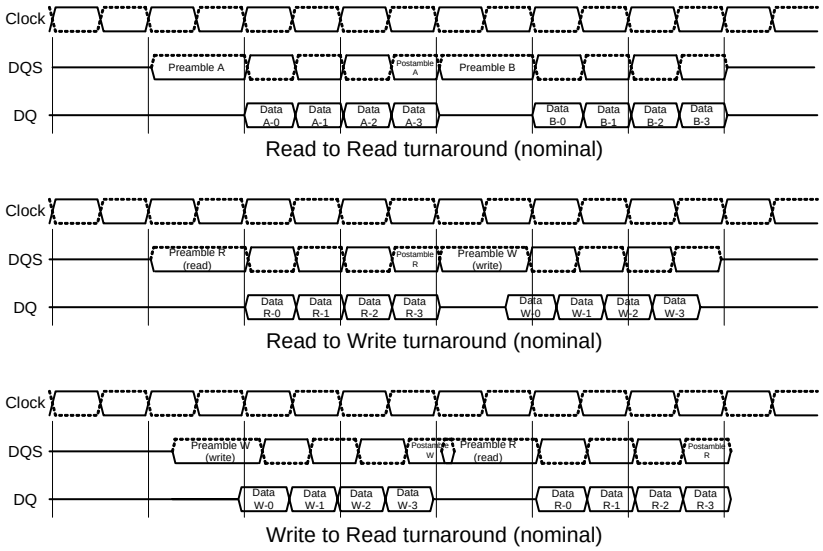

Figure 3.1 — Nominal Turnaround Time Timing Diagram

3.7 DDR Calibration

The following sections describe these DDR calibration and initialization features:

- DRAM initialization and (E)MRS command CSR's and FSM
- DQS failure CSR
- DQS receive enable calibration
- DQS delay calibration

3.7.1 DRAM Initialization and (E)MRS

The Advanced Memory Buffer provides a set of CSR's that allow BIOS to manage DRAM power up initialization and set DRAM mode register bits. All commands needed for DRAM initialization can be generated, including precharge, refresh, mode register set (MRS), and extended mode register set EMRS commands. The initialization/ (E)MRS FSM only controls the issuing of single commands, and does not automatically initialize the DRAM. It is the responsibility of software to control the command sequence to correctly initialize the DRAM.

The set of CSR's include the DCALCSR and DCALADDR registers. The fields of these CSR's are described in detail in the configuration register chapter.

The DCALCSR is used to select the command to be issued, which ranks to select, start the FSM that issues the command, and provide completion status.

The DCALADDR sets the bank and address issued to the DRAM, and therefore defines the type of (E)MRS to be issued, including limited OCD commands. DCALADDR[31:16] defines the DDR address bus during these commands, and DCALADDR[2:0] defines the ddr bank address bus.

3.7.1.1 OCD EMRS commands

FB DIMM DRAM timing is set up to work with OCD default calibration. Using the MRS/EMRS registers an EMRS OCD default is sent to the DRAMs. When the DCALCSR bit 31 is cleared to zero, an OCD exit command needs to be sent. When the DCALCSR bit 31 is cleared to zero the DRAMs should be in the default state.

Sending OCD EMRS drive(0), drive(1), adjust or exit OCD cal may have implementation dependent outcomes and should not be used in normal operation.

3.7.1.2 MRS Command Example

The following example shows how to send out an MRS command:

1. Write a value of 0x02320000 to the DCALADDR csr. This will configure the address/bank bus for an MRS command with burst length 4, CAS latency 3, and write recovery 2.
2. Write a value of 0x80000003 to the DCALCSR. This selects the (E)MRS command mode and initiates the FSM that will issue the command.
3. Poll the DCALCSR until bit 31 is cleared to zero by hardware. This indicates that the FSM has completed the selected operation.

3.7.2 Automatic DDR Bus Calibration

The Advanced Memory Buffer has two automatic DDR bus calibration functions that must be executed before read data can be captured reliably. These functions issue a series of write and read transactions on the DRAM bus, analyze the read data captured, and program a set of calibration results configuration registers. During subsequent operations, these configuration registers control the DDR IO circuits and ensure proper data capture. DIMM memory contents are not preserved during calibration. Calibration can take up to several ms to complete. The following steps run the calibration:

1. Program the DCALCSR to 0x8000000c. This selects and initiates the first of two calibrations.
2. Poll the DCALCSR until bit 31 is cleared to zero by hardware.
3. Program the DCALCSR to 0x80000005. This selects/initiates the second calibration.
4. Poll the DCALCSR until bit 31 is cleared to zero by hardware.

3.7.3 S3 Recovery Configuration Registers

The following CSRs should be stored in non-volatile memory before entering S3 mode and restored before normal DRAM transactions begin.

- DRC
- MTR
- DSREFTC
- DAREFTC
- S3RESTORE[15:0]
- SPDPAR[15:0] - SPD Personality Bytes

NOTE: Refer to "Advanced Configuration and Power Interface Specification Version 2.0c" as published by www.acpi.info for S3 mode definition.

3.7.4 Receive Enable Calibration

The DQS input receiver needs to be disabled when the DDR bus is floating (tri-stated), e.g. between the read and write data transfers. Otherwise, the floating strobe would cause spurious data to be written into the read data FIFO. Also, the DQS input receiver needs to be disabled during a write so that the write data strobes do not cause unwanted data or check-bits to be written into the read data FIFO.

During a read, the DRAM's initially drive the DQS signals low for a full cycle. This is the preamble. After the preamble, the DQS signals are toggled twice per cycle, for every cycle there is a data transfer, which is determined by the configured burst length and the number of back-to-back read commands that were issued to the selected rank. After the last DQS falling edge, the DQS signal is driven low for a half cycle. This is the post-amble. After the post-amble the DQS signals are tri-stated.

The Advanced Memory Buffer automatically finds the end of the preamble of each of the 18 DQS pairs on the DDR bus. That is, it finds the location of the first waveform transition that defines the end of the preamble of each DQS pair. Once this is complete, the Advanced Memory Buffer calculates the location of the center of the preambles, and stores this information for use during read transactions. Receiver calibration is initiated by setting the DCALCSR.START CSR. Hardware clears this bit when the calibration is complete. The calibration method modifies the data contents of the DIMM.

3.7.5 DQS Delay Calibration

The DQS Delay calibration adjusts the Advanced Memory Buffer's on-chip delay circuits that align DQS signals to the center of their associated DQ/CB data eyes at the capture flops in the DDR I/O cluster. This maximizes the DQ/CB setup and hold time at these flops, which capture source synchronous data from the DDR data bus.

DQS delay calibration is initiated by setting the DCALCSR.START CSR. Hardware clears this bit when the calibration is complete. The calibration method modifies the data contents of the DIMM. The calibration is accomplished by issuing a series of write and read transactions, and comparing expected to captured data.

3.8 DDR MEMBIST

The AMB supports memory self test for memory initialization during system boot up and for testing the installed memory. During DIMM manufacturing this mode may be used to apply tests at speed to test the AMB-DRAM interface. The table below describes the features of the MEMBIST engine.

At system level MEMBIST may be executed on multiple DIMMs simultaneously. This is expected to speed memory test during system boot.

During DIMM manufacturing, MEMBIST offers a fast method to detect assembly-related defects, interface defects and the majority of core-related defects during DIMM manufacturing. This testing may be initiated either in or out of band, making MEMBIST compatible with motherboards, low cost ATE, or standalone equipment such as continuity testers. During motherboard testing an FBD-enabled system will be required for in-band.

Transparent mode will be used for memory core testing while BIST will be more useful for DRAM interface testing. For this reason there is no plan to specify a comprehensive BIST capability. Traditional system test methods will be used for operating system or application-based testing of the memory subsystem. This may include existing memory stress tests, applications or other tests selected by the DIMM manufacturer.

3.8.1 MEMBIST Features

DATA Type

1. Fixed nibble data patterns (0, 3, 5, 6, 9, A, C, F)
2. 144-bit user defined data pattern and inverted user defined data pattern
3. 32-bit user defined circular shift data pattern
4. Random data generated from LFSR 32-bit CRC data

Those data patterns combined with addressing should be sufficient to test memory interface defect and DIMM assembly-related defect.

Address Type

1. Increased or decreased address type controlled by user
2. FastX, FastY, FastXY support
3. User defined test address range

DRAM Timing Parameter

1. BL4/BL8 support.
2. Various DDR2 DRAM timing support.
3. DRAM Refresh

Failure status:

1. Pass/Fail indicator, test abort, and halt on error features.
2. Up to five failure address recording.
3. Record one, and optionally up to 4, sets of 144 bits failure data.
4. 144 bit failure data location accumulator through entire test.

Table 3.2 — MEMBIST Feature Summary

Failure Status	Pass/Fail indicator
Address Pattern	
X address bits	15-16
Y address bits	15-16
Z address (bank) bits	3
Address pattern in tests	User defined init/end physical address scan with increased/ decreased FastX, FastY, FastXY support.
Failure Address logger	Up to 5 failure address loggers.
Data Patterns	
Fixed data pattern	fixed nibble data patterns (0, 3, 5, 6, 9, A, C, F)
User defined data pattern	144 bit data, defined in 5 MBDATA registers by user
LFSR	LFSR (CRC32),
Data Error logger	First 144 bit failure data logger
	144 bits lane failure data location
	Halt on error or run to completion of test
	Test abort during the test
DRAM Timing control	
Programmable Timings	
tCL, tRCD, tRP, tWR, tRC	various DDR2 DRAM timing support
BL	4 or 8
Refresh control	Capable of various DDR2 refresh intervals
BIST Engine	
Access method	all registers and settings could be accessed from FSB or SMBus
DRAM data width	x4 or x8
DRAM initialization and mode register settings	statically set by host
Pattern execution method	SMBus or Host
Failure data access	Failing data is available for read out by the host/SMBus at completion of test
Algorithms Support	

Table 3.2 — MEMBIST Feature Summary

Failure Status	Pass/Fail indicator
Notation: ^ = increasing addr from start to end v = decreasing addr R/W = Read/Write D/I = Data/ Inverted Data number = sequence of events	
Scan	^ (WD1); ^(RD2); ^ (WI3); ^ (RI4)
Init	^ (WD1)
DATA retention	^ (WD1); Pause; ^ (RD2)
Mats+	^(WD_1); ^(RD_2, WI_3); v(RI_4, WD_5);
MarchC–	^(WD1); ^(RD2, WI3); ^(RI4, WD5); v(RD6, WI7); v(RI8, WD9); v(RD10);
Read	^(RD_1);

3.9 DIMM Organization

The Advanced Memory Buffer supports DIMMs with 1 or 2 independent ranks (chip-selects). Each rank consists of 18 4bit DDR SDRAM devices or 9 8bit DDR SDRAM devices. Dual rank DIMMs consist of 36 4bit DDR SDRAM devices or 18 8bit DDR SDRAM devices. Non-ECC DIMMs could also be built with 16bit DDR SDRAM devices .

4 Electrical, Power, and Thermal

This chapter contains a description of the Advanced Memory Buffer's (AMB) electrical DC parameters, timing parameters, power considerations, and thermal considerations.

4.1 Electrical DC Parameters

4.1.1 Absolute maximum ratings

Table 4. 1 contains absolute maximum ratings over operating free-air temperature range (see Note 1).

Table 4.1 — Absolute maximum ratings over operating free-air temperature range (see Note 1)

Symbol	Parameter	Min	Max	Unit
V_{DD}	Supply voltage DRAM Interface	–0.5	+2.3	V
$V_{IN\ (DDR2)}$, $V_{OUT\ (DDR2)}$	Voltage on any DDR2 interface pin relative to Vss (See Notes 2 and 3)	–0.5	+2.3	V
I_{INK} ($V_{IN} < 0$ or $V_{IN} > V_{DD}$)	Input clamp current		±30	mA
I_{OUTK} ($V_{OUT} < 0$ or $V_{OUT} > V_{DD}$)	Output clamp current		±30	mA
I_{OUT} (V_{OUT} = 0 to V_{DD})	Continous output current		±30	mA
N/A	Continuous current through each V_{DD} or GND		±100	mA
V_{CC}	Supply voltage for Core and High Speed Interface	–0.3	+1.75	V
T_{stg}	Storage temperature range	–55	+100	°C

NOTE 1 Stresses beyond those listed under "absolute maximum ratings" may cause permanent damage to the device. These are stress ratings only, and functional operation of the device at these or any other conditions beyond those indicated under "recommended operating conditions" is not implied. Exposure to absolute-maximum-rated conditions for extended periods may affect device reliability.

NOTE 2 The input and output negative-voltage ratings may be exceeded if the input and output clamp-current ratings are observed.

This value is limited to 2.3V maximum.

4.1.2 Normal Mode

Table 4. 2 contains the electrical DC parameters for the Advanced Memory Buffer part in normal mode.

Table 4.2 — Advanced Memory Buffer Normal Mode DC Electrical Parameters

Parameter		Units	Min	Typ	Max
V_{CC} link / core	0kHz - 30kHz	Volts	1.455	1.5	1.575
V_{DD}		Volts	1.7	1.8	1.9
V_{DDSPD}		Volts	3.0	3.3	3.6

Note: There will also be a V_{TT} termination supply at $V_{DD}/2$ available on the DIMM but does not connect to the Advanced Memory Buffer.

Table 4. 2A contains the electrical DC+AC parameters for the Advanced Memory Buffer part in normal mode.

Table 4.2A — Advanced Memory Buffer Normal Mode DC+AC Electrical Parameters

Parameter		Units	Min	Typ	Max
V_{CC} link / core	30kHz - 1MHz	Volts	1.425	1.5	1.590

Note: There is also a +7/-5% tolerance allowed for current load steps associated with initialization/error-recovery state transitions, such as into and out of EI, IBIST, and MEMBIST. For these transitions, a temporary voltage overshoot is expected and acceptable as long as it is within +7% (step transition for 20µs and max duty cycle of 10^{-6}). Transitions between Active and Idle states are not included in this +7%/-5% tolerance.

Table 4. 3 contains the AMB Power Specification Parameters for the Advanced Memory Buffer part in normal mode.

Table 4.3 — AMB Power Specification Parameters and Test Conditions

Symbol	Conditions	Power Supply	Max	Units	Notes
Idd_Idle_0	**Idle Current, single or last DIMM** L0 state, idle (0 BW) Primary channel enabled, Secondary Channel Disabled CKE high. Command and address lines stable. DRAM clock active.	@1.5V		mA	
		@1.8V		mA	
		@3.3V		mA	
Idd_Idle_0 Total Power				W	
Idd_Idle_1	**Idle Current, first DIMM** L0 state, idle (0 BW) Primary and Secondary channels enabled CKE high. Command and address lines stable. DRAM clock active.	@1.5V		mA	
		@1.8V		mA	
		@3.3V		mA	
Idd_Idle_1 Total Power				W	
Idd_Idle_2	**Idle Current, DRAM power down** L0 state, idle (0 BW) Primary and Secondary channels enabled CKE low. Command and address lines floated. DRAM clock active, ODT and CKE driven low.	@1.5V		mA	
		@1.8V		mA	
		@3.3V		mA	
Idd_Idle_2 Total Power				W	

Table 4.3 — AMB Power Specification Parameters and Test Conditions

Symbol	Conditions	Power Supply	Max	Units	Notes
Idd_Active_1	**Active Power** L0 state. 50% DRAM BW, 67% read, 33% write. Primary and Secondary channels enabled. DRAM clock active, CKE high.	@1.5V		mA	
		@1.8V		mA	
		@3.3V		mA	
Idd_Active_1 Total Power				W	
Idd_Active_2	**Active Power, data pass through** L0 state. 50% DRAM BW to downstream DIMM, 67% read, 33% write. Primary and Secondary channels enabled CKE high. Command and address lines stable. DRAM clock active.	@1.5V		mA	
		@1.8V		mA	
		@3.3V		mA	
Idd_Active_2 Total Power				W	
Idd_L0s	**Channel Standby** Average power over 42 frames where the channel enters and exits L0s. DRAMs Idle (0 BW). CKE low. Command and address lines floated DRAM clock active, ODE and CKE driven low.	@1.5V		mA	
		@1.8V		mA	
		@3.3V		mA	
Idd_L0s Total Power				W	
Idd_Training (for AMB spec, Not in SPD)	Training Primary and Secondary channels enabled. 100% toggle on all channel lanes DRAMs idle. 0 BW. CKE high, Command and address lines stable. DRAM clock active.	@1.5V		mA	
		@1.8V		mA	
		@3.3V		mA	
Idd_Training Total Power				W	

Assumptions for all parameters:

Primary channel Drive strength at 100% with De-emphasis at -6.5dB

Secondary channel drive strength at 60% with De-emphasis at -3dB when enabled.

Address and Data fields are pseudo-random, which provides a 50% toggle rate on DRAM data lines and link lanes when data is being transferred.

Assuming 1 activate command and 1 read/write command per BL=4 transfer

BL=4.

10 lanes southbound and 14 lanes northbound are enabled and active (12 lanes NB if non-ECC DIMM).

SPD specific assumption:

Number of devices on the specific DIMM assumed.

Termination of command, address, and control is actual value used on the DIMM.

ECC or non-ECC as per the specific DIMM.

SPD specifies Delta T

AMB power spec specific assumptions:

Dual rank x8 ECC DIMM assumed (18 DRAM devices present on DIMM)

ECC DIMM assumed (72 bit data, 14 lanes northbound).

AMB specification specifies current for each rail.

Table 4.4 contains the AMB Power Specification Parameters for the Advanced Memory Buffer part in normal mode.

Table 4.4 — Values for x8 DIMMs

			533 MHz		667 MHz		800 MHz			
Symbol	**Conditions**	**Power Supply**	**Thermal Design**	**Max Current**	**Thermal Design**	**Max Current**	**Thermal Design**	**Max Current**	**Units**	**Notes**
Idd_Idle_0	**Idle Current, single or last DIMM** L0 state, idle (0 BW) Primary channel enabled, Secondary Channel Disabled CKE high. Command and address lines stable. DRAM clock active.	@1.5V	2.1	2.2	2.4	2.6	*TBD*	*TBD*	A	
		@1.8V	0.6	0.7	0.6	0.7	*TBD*	*TBD*	A	
		@3.3V							A	
Idd_Idle_0 Total Power			**3.5**		**4.0**		***TBD***		W	
Idd_Idle_1	**Idle Current, first DIMM** L0 state, idle (0 BW) Primary and Secondary channels enabled CKE high. Command and address lines stable. DRAM clock active.	@1.5V	2.7	3.0	3.1	3.4	*TBD*	*TBD*	A	
		@1.8V	0.6	0.7	0.6	0.7	*TBD*	*TBD*	A	
		@3.3V							A	
Idd_Idle_1 Total Power			**4.6**		**5.1**		***TBD***		W	
Idd_TDP_0 (for AMB spec, Not in SPD)	**Active Power, TDP BW, Single or Last DIMM** L0 state TDP Channel BW = 2.0GB/s@533; 2.4GB/s@667; 3.0GB/s@800 DIMM BW = 2.0GB/s@533; 2.4GB/s@667; 3.0GB/s@800 67% read, 33% write. Primary channel Enabled Secondary channel Disabled CKE high. Command and Addres	@1.5V	2.4	2.6	2.8	3.0	*TBD*	*TBD*	A	1
		@1.8V	1.1	1.3	1.2	1.3	*TBD*	*TBD*	A	1
		@3.3V							A	
Idd_TDP_0 Total Power			**5.2**		**5.8**		***TBD***		W	1
Idd_TDP_1 (for AMB spec, Not in SPD)	**Active Power, TDP BW, First DIMM** L0 state TDP Channel BW = 2.0GB/s@533; 2.4GB/s@667; 3.0GB/s@800 DIMM BW =2/3 Channel BW = 1.3GB/s@533; 1.6GB/s@667; 2GB/s@800 67% read, 33% write. Primary channel Enabled Secondary channel Enabled CKE high. Command and Ad	@1.5V	3.0	3.3	3.5	3.8	*TBD*	*TBD*	A	1
		@1.8V	0.9	1.0	0.9	1.0	*TBD*	*TBD*	A	1
		@3.3V							A	

Table 4.4 — Values for x8 DIMMs

			533 MHz		667 MHz		800 MHz			
Symbol	**Conditions**	**Power Supply**	**Thermal Design**	**Max Current**	**Thermal Design**	**Max Current**	**Thermal Design**	**Max Current**	**Units**	**Notes**
Idd_TDP_1 Total Power			**5.8**		**6.4**		***TBD***		W	1
Idd_Active_1	**Active Power** L0 state. 50% DRAM BW, 67% read, 33% write. Primary and Secondary channels enabled. DRAM clock active, CKE high.	@1.5V	3.1	3.4	3.6	3.9	*TBD*	*TBD*	A	
		@1.8V	1.2	1.3	1.2	1.3	*TBD*	*TBD*	A	
		@3.3V							A	
Idd_Active_1 Total Power			**6.4**		**7.1**		***TBD***		W	
Idd_Active_2	**Active Power, data pass through** L0 state. 50% DRAM BW to downstream DIMM, 67% read, 33% write. Primary and Secondary channels enabled CKE high. Command and address lines stable. DRAM clock active.	@1.5V	2.9	3.2	3.3	3.7	*TBD*	*TBD*	A	
		@1.8V	0.6	0.7	0.6	0.7	*TBD*	*TBD*	A	
		@3.3V							A	
Idd_Active_2 Total Power			**5.0**		**5.6**		***TBD***		W	
Idd_Training (for AMB spec, Not in SPD)	**Training** Primary and Secondary channels enabled. 100% toggle on all channel lanes DRAMs idle. 0 BW. CKE high, Command and address lines stable. DRAM clock active.	@1.5V		3.5		4.0	*TBD*	*TBD*	A	
		@1.8V		0.7		0.7	*TBD*	*TBD*	A	
		@3.3V							A	
Idd_Training Total Power							***TBD***		W	
Idd_IBIST (for AMB spec, Not in SPD)	**IBIST** Over all IBIST modes DRAM Idle (0 BW) Primary channel Enabled Secondary channel Enabled CKE high. Command and Address lines stable DRAM clock active	@1.5V		3.8		4.5	*TBD*	*TBD*	A	
		@1.8V		0.7		0.7	*TBD*	*TBD*	A	
		@3.3V							A	
Idd_IBIST Total Power							***TBD***		W	
Idd_MemBIST (for AMB spec, Not in SPD)	**MemBIST** Over all MemBIST modes >50% DRAM BW (as dictated by the AMB) Primary channel Enabled Secondary channel Enabled CKE high. Command and Address lines stable DRAM clock active	@1.5V		3.3		3.8	*TBD*	*TBD*	A	
		@1.8V		2.1		2.1	*TBD*	*TBD*	A	
		@3.3V							A	
Idd_MemBIST Total Power							***TBD***		W	
Idd_EI (for AMB spec, Not in SPD)	**Electrical Idle** DRAM Idle (0 BW) Primary channel Disabled Secondary channel Disabled CKE low. Command and Address lines Floated DRAM clock active, ODT and CKE driven low	@1.5V		2.0		2.5	*TBD*	*TBD*	A	
		@1.8V		0.2		0.2	*TBD*	*TBD*	A	
		@3.3V							A	
Idd_EI Total Power							***TBD***		W	

Table 4.4A contains the AMB Power Specification Parameters for the Advanced Memory Buffer part in normal mode.

Table 4.4A — Values for x4 DIMMs

			533 MHz		667 MHz		800 MHz			
Symbol	**Conditions**	**Power Supply**	**Thermal Design**	**Max Current**	**Thermal Design**	**Max Current**	**Thermal Design**	**Max Current**	**Units**	**Notes**
Idd_Idle_0	**Idle Current, single or last DIMM** L0 state, idle (0 BW) Primary channel enabled, Secondary Channel Disabled CKE high. Command and address lines stable. DRAM clock active.	@1.5V	2.1	2.2	2.4	2.6	*TBD*	*TBD*	A	
		@1.8V	0.9	0.9	0.9	0.9	*TBD*	*TBD*	A	
		@3.3V							A	
Idd_Idle_0 Total Power			**3.9**		**4.4**		***TBD***		W	
Idd_Idle_1	**Idle Current, first DIMM** L0 state, idle (0 BW) Primary and Secondary channels enabled CKE high. Command and address lines stable. DRAM clock active.	@1.5V	2.7	3.0	3.1	3.4	*TBD*	*TBD*	A	
		@1.8V	0.9	0.9	0.9	0.9	*TBD*	*TBD*	A	
		@3.3V							A	
Idd_Idle_1 Total Power			**4.9**		**5.5**		***TBD***		W	
Idd_TDP_0 (for AMB spec, Not in SPD)	**Active Power, TDP BW, Single or Last DIMM** L0 state TDP Channel BW = 2.0GB/s@533; 2.4GB/s@667; 3.0GB/s@800 DIMM BW = 2.0GB/s@533; 2.4GB/s@667; 3.0GB/s@800 67% read, 33% write. Primary channel Enabled Secondary channel Disabled CKE high. Command and Addres	@1.5V	2.4	2.6	2.8	3.0	*TBD*	*TBD*	A	1
		@1.8V	1.5	1.6	1.5	1.6	*TBD*	*TBD*	A	1
		@3.3V							A	
Idd_TDP_0 Total Power			**5.9**		**6.5**		***TBD***		W	1
Idd_TDP_1 (for AMB spec, Not in SPD)	**Active Power, TDP BW, First DIMM** L0 state TDP Channel BW = 2.0GB/s@533; 2.4GB/s@667; 3.0GB/s@800 DIMM BW =2/3 Channel BW = 1.3GB/s@533; 1.6GB/s@667; 2GB/s@800 67% read, 33% write. Primary channel Enabled Secondary channel Enabled CKE high. Command and Ad	@1.5V	3.0	3.3	3.5	3.8	*TBD*	*TBD*	A	1
		@1.8V	1.3	1.4	1.3	1.4	*TBD*	*TBD*	A	1
		@3.3V							A	
Idd_TDP_1 Total Power			**6.3**		**6.9**		***TBD***		W	1
Idd_Active_1	**Active Power** L0 state. 50% DRAM BW, 67% read, 33% write. Primary and Secondary channels enabled. DRAM clock active, CKE high.	@1.5V	3.1	3.4	3.6	3.9	*TBD*	*TBD*	A	
		@1.8V	1.6	1.7	1.6	1.7	*TBD*	*TBD*	A	
		@3.3V							A	
Idd_Active_1 Total Power			**6.9**		**7.6**		***TBD***		W	

Table 4.4A — Values for x4 DIMMs

			533 MHz		667 MHz		800 MHz			
Symbol	**Conditions**	**Power Supply**	**Thermal Design**	**Max Current**	**Thermal Design**	**Max Current**	**Thermal Design**	**Max Current**	**Units**	**Notes**
Idd_Active_2	**Active Power, data pass through** L0 state. 50% DRAM BW to downstream DIMM, 67% read, 33% write. Primary and Secondary channels enabled CKE high. Command and address lines stable. DRAM clock active.	@1.5V	2.9	3.2	3.3	3.7	*TBD*	*TBD*	A	
		@1.8V	0.9	0.9	0.9	0.9	*TBD*	*TBD*	A	
		@3.3V							A	
Idd_Active_2 Total Power			**5.5**		**6.1**		***TBD***		W	
Idd_Training (for AMB spec, Not in SPD)	**Training** Primary and Secondary channels enabled. 100% toggle on all channel lanes DRAMs idle. 0 BW. CKE high, Command and address lines stable. DRAM clock active.	@1.5V		3.5		4.0	*TBD*	*TBD*	A	
		@1.8V		0.9		0.9	*TBD*	*TBD*	A	
		@3.3V							A	
Idd_Training Total Power							***TBD***		W	
Idd_IBIST (for AMB spec, Not in SPD)	**IBIST** Over all IBIST modes DRAM Idle (0 BW) Primary channel Enabled Secondary channel Enabled CKE high. Command and Address lines stable DRAM clock active	@1.5V		3.8		4.5	*TBD*	*TBD*	A	
		@1.8V		0.9		0.9	*TBD*	*TBD*	A	
		@3.3V							A	
Idd_IBIST Total Power							***TBD***		W	
Idd_MemBIST (for AMB spec, Not in SPD)	**MemBIST** Over all MemBIST modes >50% DRAM BW (as dictated by the AMB) Primary channel Enabled Secondary channel Enabled CKE high. Command and Address lines stable DRAM clock active	@1.5V		3.3		3.8	*TBD*	*TBD*	A	
		@1.8V		2.4		2.4	*TBD*	*TBD*	A	
		@3.3V							A	
Idd_MemBIST Total Power							***TBD***		W	
Idd_EI (for AMB spec, Not in SPD)	**Electrical Idle** DRAM Idle (0 BW) Primary channel Disabled Secondary channel Disabled CKE low. Command and Address lines Floated DRAM clock active, ODT and CKE driven low	@1.5V		2.0		2.5	*TBD*	*TBD*	A	
		@1.8V		0.2		0.2	*TBD*	*TBD*	A	
		@3.3V							A	
Idd_EI Total Power							***TBD***		W	

Notes and Assumptions:

NOTE 1 Values highlighted in 'Red' are for reference (i.e. placeholder value)

Vdd : Thermal Design = 1.845V (+2.5%) ; Max Current = 1.900V (+5.5%)

Vcc : Thermal Design = 1.530V (+2%) ; Max Current = 1.575V (+5%)

Includes all DIMM DRAM organizations (SRx4, DRx4, SRx8, DRx8) and Raw Cards (A, B, C, D, E, H, J)

For x8, measured with DRx8 raw card B with 39 ohm termination for command, address, and clocks, and 47 ohm termination for CS and CKE

For x4, measured with DRx4 raw card E with parallel 33 ohm termination for command, address, and 39 ohm termination for CS, CKE and clocks

Note: cards using smaller termination resistors will have higher powers. e.g. x4 cards parallel 22 ohm termination for command and address could add as much as 0.4W to the power for all states.

Primary channel Drive strengths at 100% with De-emphasis at -6.5dB

Secondary channel Drive strengths at 60% with De-emphasis at -3.5dB when enabled

Address and Data fields are pseudo-random, which provides a 50% toggle rate on DRAM data lines and link lanes when data is being transferred.

Assuming 1 activate command and 1 read/write command per BL=4 transfer BL=4.

10 lanes southbound and 14 lanes northbound are enabled and active (12 lanes NB if non-ECC DIMM).

Vddspd rail assumed to be insignificant (<0.1 A max @ 3.3v)

Thermal Max is for cooling and heat sink / heat spreader requirements

VR Max is for voltage regulator sizing and voltage distribution and tolerance requirements

Total Power assumes some 1.8v current is dissipated in the DIMM terminations (not in the AMB)

4.1.3 S3 current Specification

S3 is an ACPI mode in which the DIMMs are put into a very lower power state, with the DRAMs in self refresh mode. This AMB S3 current specification is required for the sizing of the power supply used for the S3 mode.

In this mode is defined as:
DRAMs in self refresh.
AMB maintaining the DRAMs in self refresh by driving the CKE signals low.
REFCLK not toggling.
VDD = VDDmax (1.9V).
VCC = 0V
VTT = 0V

			533 MHz		667 MHz		800 MHz		
Symbol	Conditions	Power Supply	Nominal	Max Current	Nominal	Max Current	Nominal	Max Current	Units
Idd_S3	**S3 current** VDD = 1.9V VCC = 0V VTT = 0V Across process variations Across the operating TCASE temperature range. DIMM types: Raw Card A, B, C, D, E, H, J, and future raw card type as adopted by FB-DIMM.	VDD (1.8V)		75		75		75	mA

Note that the total DIMM current will include the AMB IDD_S3 value as well as the self refresh current of all of the DRAMs on the DIMM.

4.2 FBD Channel Interface

Refer to “High Speed Differential PTP Link at 1.5V Specification” for recommended operating conditions.

4.2.1 FBD Electrical Timing Specifications

Table 4.5 contains the FBD electrical timing specifications.

Table 4.5 — Advanced Memory Buffer FBD Timing/Electrical

Symbol	Parameter	Units	Min	Typ	Max	Notes
tEI Propagate	EI Assertion Pass-Thru Timing	nS			60	
tEID	EI Deassertion Pass-Thru Timing	clks			bit lock	
tEI	EI Assertion Duration	clks	100			1
tBitLock	Bit Lock Interval	frames			119	1
tFrameLock	Frame Lock Interval	frames			154	1

NOTE 1 Defined in FBD Architecture and Protocol Spec

4.2.2 AMB Latency Parameters

Parameter	Date Rate	Min	Typ	Max	Units	Comments
tSCL Southbound Command Latency	533				ns	1, 8, 9
	667				ns	
	800				ns	
tNDL Northbound Data Latency	533				ns	2, 9
	667				ns	
	800				ns	
tCCL Core Command Latency	533				ns	3, 5
	667				ns	
	800				ns	
tCDL Core Data Latency	533				ns	4, 5
	667				ns	
	800				ns	
tRESAMPLE Resample Delay	533				ns	6
	667				ns	
	800				ns	
tRESYNC Resync Delay	533				ns	7, 8, 9
	667				ns	
	800				ns	

NOTE1 tSCL is measured from the center of the data eye of the first bit of the command frame at the SB input to the DDR clock rising edge that latches the A-slot command to the DRAMs. See diagram below.

NOTE2 tNDL is measured from the rising edge of the latest DQS input to the AMB to the center of the data eye of the first bit of the matching data frame at the NB outputs. See diagram below.

NOTE3 tCCL is calculated as the maximum time from an internal point where the deskewed frame aligned command is available to the core from the SB IO (the start of the Command to Data Delay) until the DDR clock rising edge that latches the A-slot command to the DRAMs. See diagram below. This maximum considers worst case operating conditions.

NOTE4 tCDL is calculated as the maximum time from the rising edge of the latest DQS input to the time where the data is available to be sent to the NB IO (end point of the Command to Data Delay). See diagram below. This maximum considers worst case operating conditions.

NOTE5 tCCL and tCDL are meant to provide the DIMM vendor with the AMB portion of the Command to Data delay which is included in the SPD. The Command to Data Delay in the SPD consists of tCCL + tCMD_FLT + tDQSCK (DRAM spec) + tDQS_FLT + tCDL. The XXXX_FLT parameters are PCB flight delays. tSCL may have a programmable added delay on some DIMM configurations which must also be added in.

NOTE6 tRESAMPLE is the delay from the southbound input to the southbound output, or the northbound input to the northbound output when in resample mode, measured from the center of the data eye.

NOTE7 tRESYNC is the delay from the southbound input to the southbound output, or the northbound input to the northbound output when in resync mode, measured from the center of the data eye.

NOTE8 Measured upon entering L0 state immediately after channel reset, before the input has drifted with respect to REFCLK.

NOTE9 Typical numbers include the average of any clock synchronizing.

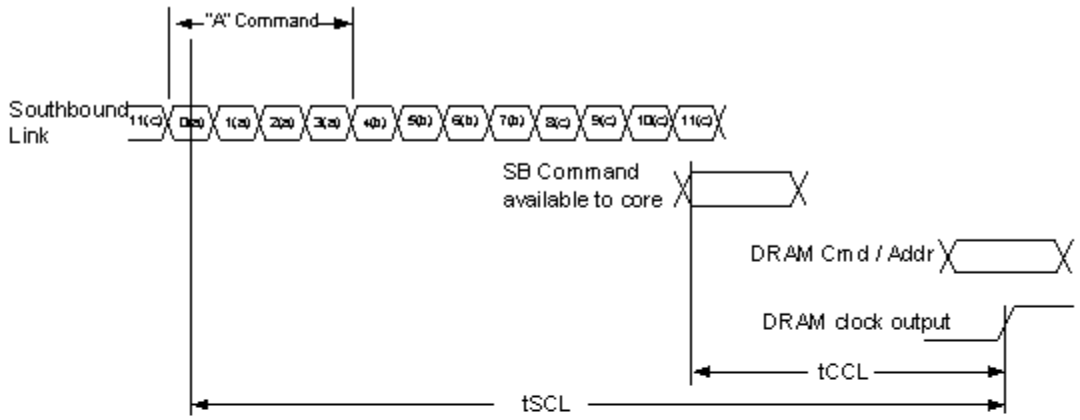

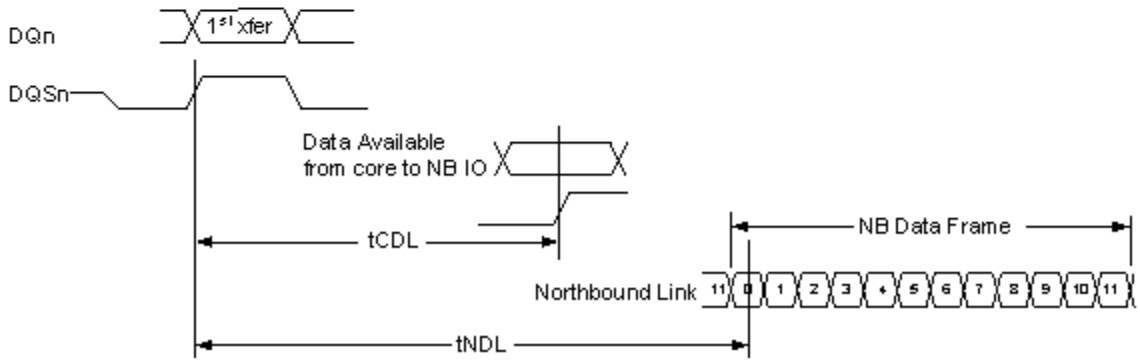

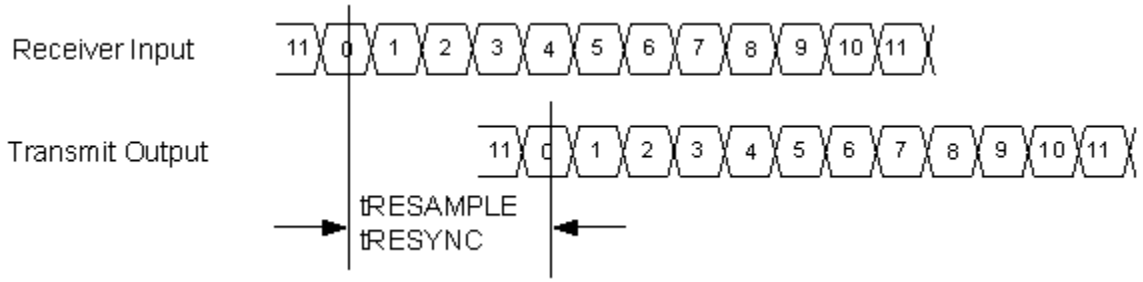

4.2.2.1 AMB Latency Range

Description	Parameter	Data Rate	Min	Max	Units	Comments
Command to Data Latency	tC2D_AMB	533	20.3	25.1	ns	1
		667	17.1	21.1	ns	
		800	TBD	TBD	ns	
Southbound Command Latency	tSCL	533			ns	2
		667			ns	
		800			ns	
Northbound Data Latency	tNDL	533			ns	2
		667			ns	
		800			ns	
Core Command Latency	tCCL	533			ns	2
		667			ns	
		800			ns	
Core Data Latency	tCDL	533			ns	2
		667			ns	
		800			ns	
RESAMPLE Delay	tRESAMPLE_AMB_SB	533	0.9	2.2	ns	3
	tRESAMPLE_AMB_NB	533	0.9	2.2	ns	4
	tRESAMPLE_AMB_SB	667	0.9	1.9	ns	3
	tRESAMPLE_AMB_NB	667	0.9	1.9	ns	4
	tRESAMPLE_AMB_SB	800	TBD	TBD	ns	3
	tRESAMPLE_AMB_NB	800	TBD	TBD	ns	4
RESYNC Delay	tRESYNC_AMB_SB	533	2.3	3.9	ns	5
	tRESYNC_AMB_NB	533	2.3	3.9	ns	6
	tRESYNC_AMB_SB	667	2.0	3.2	ns	5
	tRESYNC_AMB_NB	667	2.0	3.2	ns	6
	tRESYNC_AMB_SB	800	TBD	TBD	ns	5
	tRESYNC_AMB_NB	800	TBD	TBD	ns	6

Notes:

1. **tC2D_AMB** = Measured delay at AMB balls between the center of the1st UI of command frame on the primary southbound lane 8[1] (AMB balls U29 & U28) and the center of the 1st UI of return data on the primary northbound lane 0 (AMB balls U1 & U2) - CL (DRAM CAS latency) value * frame clock period - AL (DRAM additional latency) value * frame clock period.

2. These parameters are included in the Command to Data Latency tC2D_AMB and there is no need for them to be specified individually for interoperability.

3. **tRESAMPLE_AMB_SB** = Measured delay at AMB balls between the center of the 1st UI of a frame on the primary south-bound lane 8 (AMB balls U29 & U28) and the center of the 1st UI of the same frame on the secondary southbound lane 8 (AMB balls Y26 & W26).
4. **tRESAMPLE_AMB_NB** = Measured delay at AMB balls between the center of the 1st UI of a frame on the secondary northbound lane 0 (AMB balls V4 & V5) and the center of the 1st UI of the same frame on the primary northbound lane 0 (AMB balls U1 & U2).

5. **tRESYNC_AMB_SB** = Measured delay at AMB balls between the center of the 1st UI of a frame on the primary southbound lane 8 (AMB balls U29 & U28) and the center of the 1st UI of the same frame on the secondary southbound lane 8 (AMB balls Y26 & W26)..

6. **tRESYNC_AMB_NB** = Measured delay at AMB balls between the center of the 1st UI of a frame on the secondary north-bound lane 0 (AMB balls V4 & V5) and the center of the 1st UI of the same frame on the primary northbound lane 0 (AMB balls U1 & U2).

[1]This definition assumes that SB lane 8 is the latest lane to arrive at the AMB balls. This will typically be the case since SB lane 8 is the longest SB lane on FBDIMMs. If, due to large lane-to-lane skew at the DIMM gold finger, another lane is the latest lane to arrive at the AMB balls this other lane must be used instead for the tC2D_AMB measurement.

4.2.2.2 AMB CMD2DATANXT Utilization for Merge Data Training

AMB designs support a limited range of CMD2DATANXT register (refer to 11.3.4.1 in Register chapter) settings during runtime.

The AMB CMD2DATANXT mechanism will be used temporarily by firmware during memory subsystem training to ensure each memory channel with adequate timing margin to prevent Merge Data Errors when mixing different AMB's on a channel. Firmware will over ride the SPD CMD2DATANXT value only during TS2[2], and not while accessing DRAM. Firmware can set the Next Value of Command to Data Delay by as much as 16UI higher than what is programmed in the SPD. The new value will be used after the next fast reset. Once training is completed, the original CMD2DATANXT value from the SPD will be restored. The original value of the Command to Data Delay will take effect after the next fast reset before normal system operation initiates.

AMB designs need to support a range of CMD2DATANXT values for purposes of non-DRAM access, Merge Data training ONLY. The supported range needs to extend at least 16UI higher than the value programmed in the SPD for normal operation.

AMB designs that do not support a particular DLYFRAC value due implementation granularity must functionally round up to the next supported value.

[2]**TS2** – Used during the Polling state to determine the round trip latency of the channel and to test that each individual AMB can perform data merge properly.

4.3 DDR2 DRAM Interface Electrical Specifications

Table 4.6 contains the electrical DC parameters for the DDR2 DRAM Interface on an AMB.

Table 4.6 — Recommended operating conditions for DRAM Interface

Symbol	Parameter	Min	Nom	Max	Unit
V_{DD}	Supply voltage	1.7	1.8	1.9	V
V_{REF}	Input reference voltage	0.49 * V_{DD}	0.50 * V_{DD}	0.51 * V_{DD}	mV
V_{TT}	Termination voltage	V_{REF} – 40	V_{REF}	V_{REF} + 40	mV
Single Ended Signals					
V_{IN}	Input voltage	0	-	V_{DD}	
$V_{IH(dc)}$	DC HIGH-level input voltage	**V_{DD} / 2 + 100**	-	V_{DD} + 300	mV
$V_{IL(dc)}$	DC LOW-level input voltage	-300	-	**V_{DD} / 2 - 100**	mV
$V_{IH(ac)}$	AC HIGH-level input voltage	V_{DD} / 2 + 200	-	-	mV
$V_{IL(ac)}$	AC LOW-level input voltage	-	-	V_{DD} / 2 – 200	mV
V_{OH}	Minimum Required Output Pull-up under AC Test Load	V_{DD} / 2 + 575	-	-	mV
V_{OL}	Maximum Required Output Pull-down under AC Test Load	-	-	V_{DD} / 2 - 575	mV
V_{OTR}	Output Timing Measurement Reference Level	-	0.5*V_{DD}	-	V
$I_{OH(dc)}$	Output minimum source dc current	-13.8	-	-	mA
$I_{OL(dc)}$	Output minimum sink dc current	13.8	-	-	mA
Differential Signals					
$V_{ID(dc)}$	DC differential input voltage	**0.2**	-	-	V
$V_{ID(ac)}$	AC differential input voltage	0.4	-	-	V
$V_{IX(ac)}$	AC differential input crossing voltage	0.5 * VDD - 0.175	-	0.5 * VDD + 0.175	V
Vr	Input timing measurement reference level		$V_{IX(ac)}$		
$V_{OX(ac)}$	AC differential output crossing voltage	0.5 * VDD - 0.125	-	0.5 * VDD + 0.125	V
$V_{OUT\ (slew)}$	Output slew-rate requirement	2.2	-	3.2	V/ns
Iih	Input leakage current (HIGH)	-	-	10	uA
Iil	Input leakage current (LOW)	-	-	10	uA
C_{IO}	Input/Output Capacitance	2.0	-	2.5	pF
R_{OUT}	Output Impedance	13	-	20	Ohms
T_C	Package surface (case) temperature for AMB (In our case, $T_C = T_J$)	-	-	110	^oC

NOTE 1 Values highlighted in 'Red' are for reference (i.e. placeholder value)

NOTE 2 No V_{REF} pin on AMB

NOTE 3 $V_{OUT\ (slew)}$ covers all other outputs slew rate including clock

NOTE 4 Input voltage for all pins is limited to a maximum of 2.3v

NOTE 5 VDD/2 = 1.7/2 = 850mV; V_{OUT} = 575mV. (V_{OUT} - VDD/2)/I_{OH} must be less than 20 Ohm for values of VOUT between VDD/2 and VDD/2 - 275mV.

NOTE 6 VDD/2 = 1.7/2 = 850mV; V_{OUT} = 275mV. V_{OUT}/I_{OH} must be less than 20 Ohm for values of VOUT between 0V and 275mV.

NOTE 7 C_{IO} is the Input/Output capacitance for DQ/DQS, and Output capacitance for CMD/ADDR/CK

This chapter contains a description of the Advance Memory Buffer component's AC electrical parameters

4.4 DDR2 Electrical Output Timing Specifications

4.4.1 Description of DQ/DQS Alignment

The DQS output rising edge aligns with the CLK output rising edge and the DQS output falling edge aligns with the CLK output falling edge. The DQ outputs are 1/4 cycle offset from the DQS outputs.

DQ/DQS inputs are edge aligned and will be skewed by internal receiver DLL. Inputs are terminated on-die by a resistive circuit during reads only.

4.4.2 Description of ADD/CMD/CNTL Outputs

ADD/CMD/CNTL outputs can be adjusted relative to CLK (see Figure 4.6.) to improve setup or hold times. The value of this delay is fixed at boot time. These outputs are either aligned with CLK falling, or with a certain timing offset before CLK falling. The amount of offset is implementation specific (e.g., can be a constant timing offset, or a known ratio of the DRAM clock period).

4.4.3 Test Load Specification

DDR2 timings are specified for a 25 Ohm test load terminated to Vdd/2, measured at the Advance Memory Buffer component package pins.

4.4.4 tDVA and tDVB Parameter Description

The timing parameters tDVA and tDVB indicate the time the DQ is valid after or before DQS. tDVA is used to indicate the time that Data is Valid After. tDVA is used for DQ/DQS write hold calculations (tDH). tDVB is used to indicate the time that Data is Valid Before. tDVB is used for DQ/DQS write setup calculations (tDS).

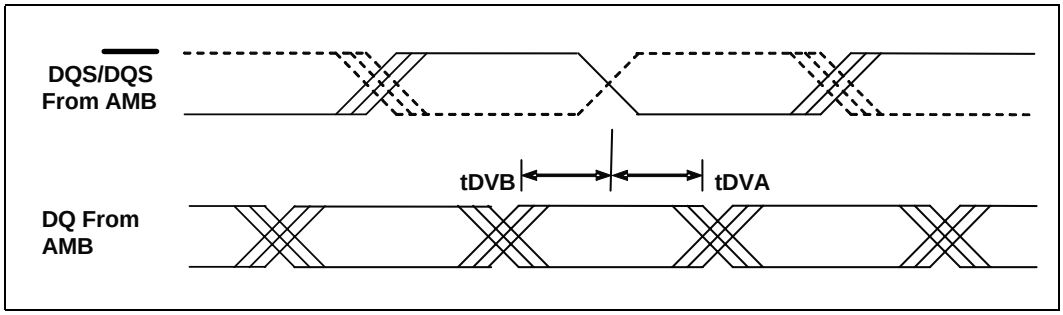

Figure 4.1 — tDVA and tDVB Timing Diagram

4.4.5 tjit and $tjit_{HP}$ Parameter Description

The parameter tjit is the full period jitter, and $tjit_{HP}$ is the half-period jitter.

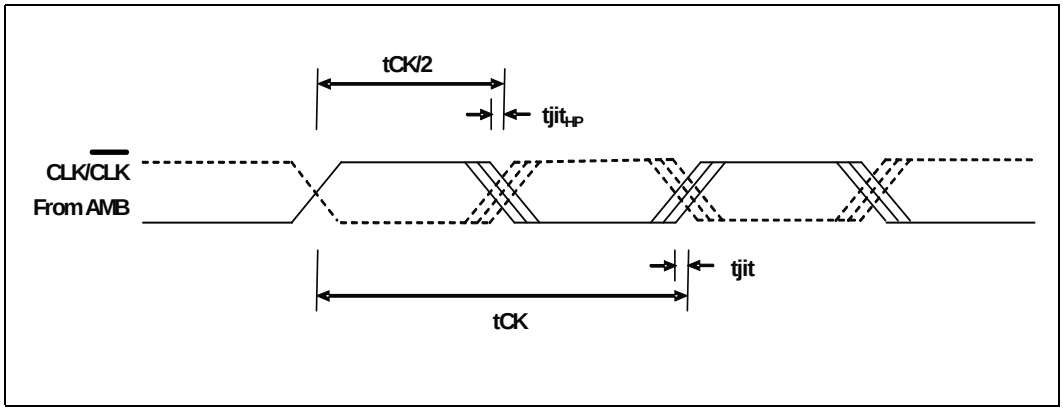

Figure 4.2 — tjit and $tjit_{HP}$ Timing Diagram

4.4.6 tCVA, tCVB, tECVA and tECVB Parameter Description

The parameters tCVA and tCVB specify the time that command is valid after and before CLK. tCVA stands for the time that the Command is Valid After the CLK/$\overline{\text{CLK}}$ crossing point. tCVA is used for CA/CLK hold calculations (tIH). tCVB stands for the time that the Command is Valid Before the CLK/$\overline{\text{CLK}}$ crossing point. tCVB is used for CA/CLK setup calculations (tIS). Figure 4.3 shows tCVA and tCVB.

tECVA and tECVB apply in early mode. For DIMMs with 36 devices, the command, address and control signals can be shifted by 1/6 clock in early mode. Figure 4.4 shows tECVA and tECVB.

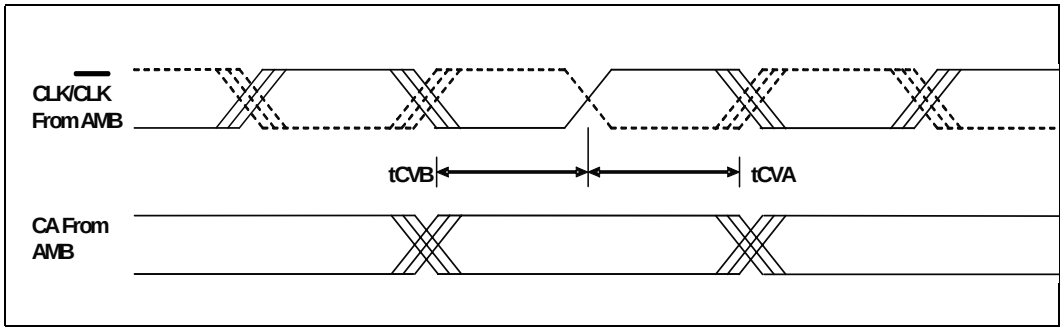

Figure 4.3 — tCVA and tCVB Timing Diagram

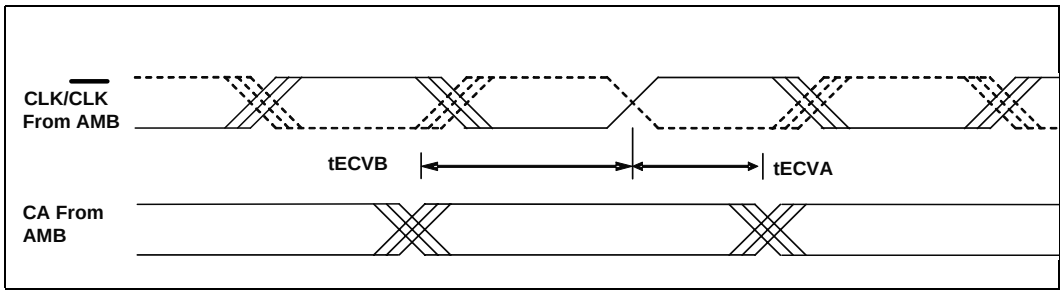

Figure 4.4 — tECVA and tECVB Timing Diagram

4.4.7 tDQSCK Timing Parameter Description

tDQSCK indicated the CLK to DQS delay. This value is used for tDQSS, tDSS and tDSH timing calculations. In order to determine these numbers accurately, package parameters must be taken into account. This adjusts the minimum time by -110 ps and the maximum by -70 ps.

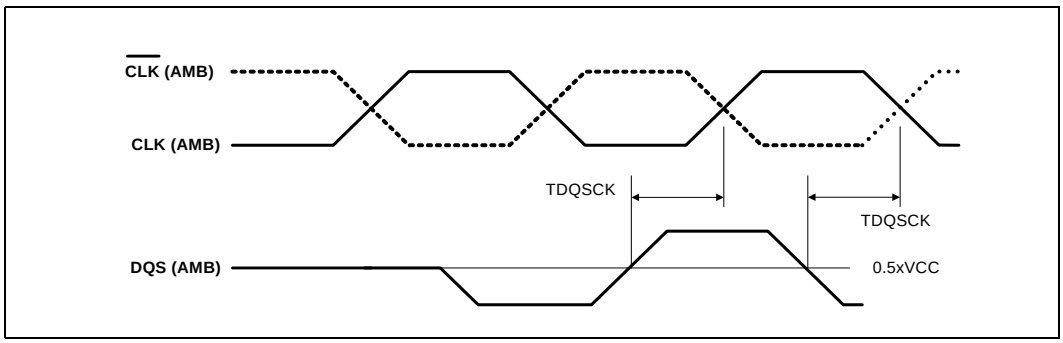

Figure 4.5 — TDQSCK Timing Diagram

4.4.8 DQ and CB (ECC) Setup/Hold Relationships to/from DQS (Read Operation)

Figure 4.6 shows the timing diagram for tHDamb and tSUamb. The data is launched from the DRAM "edge aligned," meaning that the DQ data signals switch coincident with the DQS strobe rising and falling edges. Internal to the Advance Memory Buffer, the DQS strobe is delayed by approximately a quarter clock, and this delayed clock is then used to capture the DQ data. Thus, the setup time tSUamb is negative, meaning that the data can arrive at the Advance Memory Buffer inputs after the strobe, and tHDamb is greater than a quarter clock, so that the data will not change until after it has been captured by the internally delayed strobe. The Advance Memory Buffer determines the correct internal delay of strobe DQS based on a search of the data eye during the initialization of the system. The tHDamb and tSUamb specifications are based on an idealized data eye, where the search delays the strobe by exactly one quarter clock. The sum of tHDamb and tSUamb is equivalent to the minimum data valid window at the Advance Memory Buffer inputs.

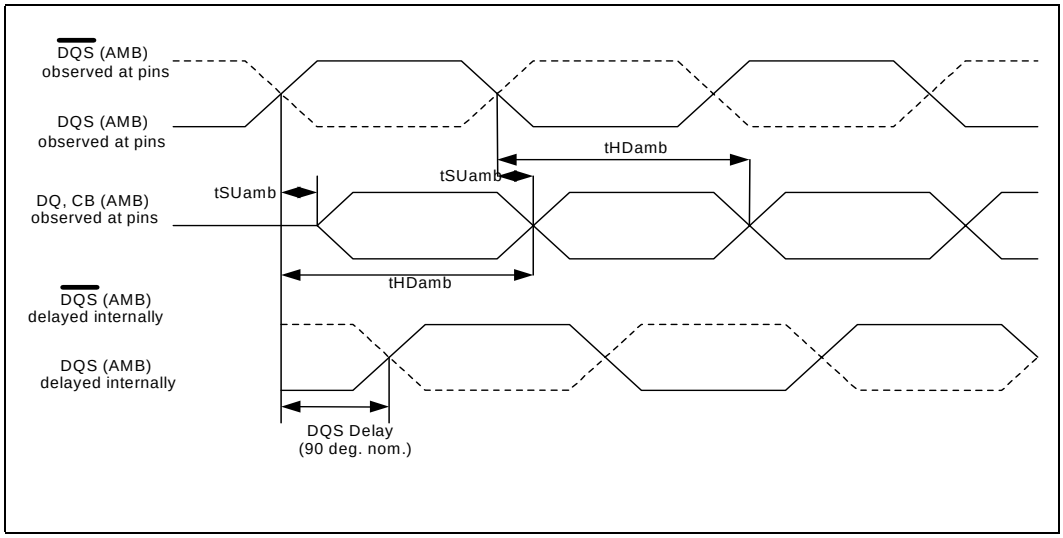

Figure 4.6 — DQ and CB (ECC) Setup/Hold Relationship to/from DQS Timing Diagram

4.4.9 Write Preamble Duration

The write preamble duration is the measurement from the point when DQS and $\overline{\text{DQS}}$ start to be driven, to the crossing point of DQS and $\overline{\text{DQS}}$. Typically, to determine when DQS and $\overline{\text{DQS}}$ are starting to be driven, timing measurements are made at 0.5xVCC +/- 50 mV, and 0.5xVCC +/- 100 mV, and then the measurements are linearly extrapolated back to 0.5xVCC.

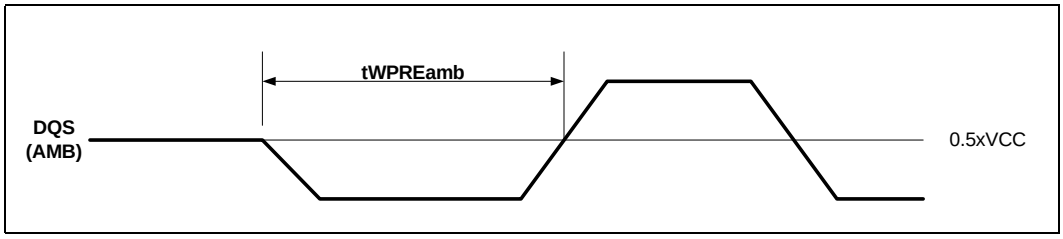

Figure 4.7 — Write Preamble Duration Timing Diagram

4.4.10 Write Postamble Duration

The write postamble duration is the measurement from the crossing point of DQS and $\overline{DQS}$, to the point where DQS and $\overline{DQS}$ start to go into a high impedance state. Typically, to determine when DQS and $\overline{DQS}$ are starting to go into a high impedance state, for DQS, timing measurements are made at Vlow + 50 mV, and Vlow + 100 mV, and then the measurements are linearly extrapolated back to Vlow. For $\overline{DQS}$, timing measurements are made at Vhigh - 50 mV, and Vhigh - 100 mV, and then the measurements are extrapolated back to Vhigh.

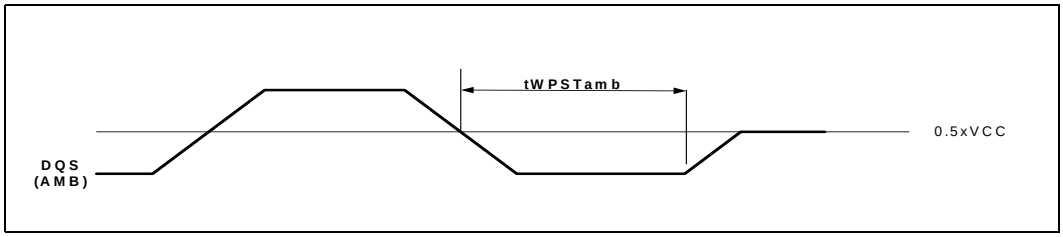

Figure 4.8 — Write Postamble Duration Timing Diagram

4.4.11 Advance Memory Buffer Component Electrical Timing Summary

Table 4.7 and Table 4.8 contain the electrical timing specifications for the Advance Memory Buffer component DDR2 interface.

Table 4.7 — Advance Memory Buffer Component DDR2 Electrical Timing Specifications (Sheet 1 of 3)

Note: Values in the DDR2 800 column are for example only. Subject to change based on JEDEC DDR2 Specification timing closure).

Symbol	Parameter	DDR2 800		DDR2 667		DDR2 533		Units	Fig #
		Min	Max	Min	Max	Min	Max		
System Memory Clock Timings									
t_{CK}	Ideal clock (CK) period	2.5		3.0		3.75		ns	
tCH	CK high time	1.12		1.35		1.70		ns	
tCL	CK low time	1.12		1.35		1.70		ns	
tjit	CK cycle to cycle Jitter		130		150		175	ps	4-7
$tjit_{HP}$	CK half-cycle jitter		130		150		175	ps	4-7
TDQSCK	Clock rising edge to DQS rising edge, or clock falling edge to DQS falling edge --includes -110/-70 ps for package	-190	10	-200	20	-210	30	ps	4-10
System Memory Address/Command/Control Signal Timings (Normal)									
tCVB	CMD/ADD/CNTL output valid before CLK/ $\overline{CLK}$	1030		1260		1615		ps	4-8

Table 4.7 — Advance Memory Buffer Component DDR2 Electrical Timing Specifications (Sheet 2 of 3)

Note: Values in the DDR2 800 column are for example only. Subject to change based on JEDEC DDR2 Specification timing closure).

Symbol	Parameter	DDR2 800		DDR2 667		DDR2 533		Units	Fig #
		Min	Max	Min	Max	Min	Max		
tCVA	CMD/ADD/CNTL output valid after CLK/ $\overline{CLK}$ -- includes -140 ps for package	890		1120		1475		ps	4-8
System Memory Address/Command/Control Signal Timings (Early)									
tECVB	Early CMD/ADD/CNTL output valid before CLK/ $\overline{CLK}$	1440		1760		2240			4-9
tECVA	Early CMD/ADD/CNTL output valid after CLK/ $\overline{CLK}$ -- includes -140 ps for package	480		620		850			4-9

Table 4.7 — Advance Memory Buffer Component DDR2 Electrical Timing Specifications (Sheet 3 of 3)

Note: Values in the DDR2 800 column are for example only. Subject to change based on JEDEC DDR2 Specification timing closure).

Symbol	Parameter	DDR2 800		DDR2 667		DDR2 533		Units	Fig #
		Min	Max	Min	Max	Min	Max		
System Memory Data and Strobe Signal Timings									
tDVB	DQ[63:0], CB[7:0], valid before DQS[15:0]/ DQS[15:0] crossing	470		575		750		ps	4-6
tDVA	DQ[63:0], CB[7:0], valid after DQS[15:0]/ DQS[15:0] crossing	470		575		750		ps	4-6
tDOPW	DQ[63:0]. CB[7:0] Output Valid Pulse Width	1.12		1.35		1.70		ns	
tSU_{AMB}	DQ and CB Input Setup Time to DQS Crossing	-425		-530		-700		ps	4-11
tHD_{AMB}	DQ and CB Input Hold Time After DQS Crossing	825		970		1180		ps	4-11
$tWPRE_{AMB}$	DQS Write Preamble Duration	2.37	3	2.85	3.5	3.58	4.25	ns	4-12
$tWPST_{AMB}$	DQS Write Postamble Duration	1.12	1.38	1.35	1.65	1.7	2.05	ns	4-13

4.4.12 Reference DDR2 Interface Package Trace Lengths

The following reference package trace lengths have been incorporated into the Advance Memory Buffer timings in Table 4.7.

Table 4.8 — Advance Memory Buffer DDR2 Package Lengths

Signal Group	Min Length	Max Length	Units
CLK/$\overline{CLK}$	24	26	mm
Command/Address	4	20	mm
CKE, CS#	9	22	mm
ODT	10	16	mm
DQS/$\overline{DQS}$/DQ	9	13	mm

§

4.5 SMBUS Interface

Table 4.9 — Recommended operating conditions for SMBUS Interface

Symbol	Parameter	Min	Typ	Max	Unit	Comments
V_{DDSPD}	Supply voltage (SMBUS)	3.0	3.3	3.6	V	3.3v ±10%
V_{IL}	SMBus signal input low voltage	-	-	0.8	V	
V_{IH}	SMBus signal input high voltage	2.1	-	V_{DDSPD}	V	
V_{OL}	SMBus signal output low voltage	-	-	0.4	V	@I_{PULLUP}
$I_{LEAK-BUS}$	Input Leakage per bus segment	-	-	±200	uA	
$I_{LEAK-PIN}$	Input Leakage per device pin	-	-	±10	uA	
I_{PULLUP}	Current sinking, V_{OL} = 0.4V	4	-	-	mA	
C_{BUS}	Capacitive load per bus segment	-	-	400	pF	
C_I	Capacitance for SMBDAT or SMBCLK pin	-	-	10	pF	
V_{NOISE}	Signal noise immunity from 10MHz to 100MHz	300	-	-	mV p-p	This is AC item applies to the high-power DC specification only

NOTE 1: Based on High-power SMBus DC Specification

4.6 Misc I/O (1.5 CMOS Driver)

Table 4.10 — Recommended operating conditions for $\overline{\text{RESET}}$ and BFUNC pins

Symbol	Parameter	Min	Typ	Max	Unit	Comments
$V_{IH(dc)}$	DC HIGH-level input voltage	1.0	-	-	V	
$V_{IL(dc)}$	DC LOW-level input voltage	-	-	0.5	V	
ILEAK	Input leakage	-	-	± 90	uA	

4.7 Thermal Diode and Analog to Digital Converter (ADC)

A thermal diode with an analog to digital converter (ADC) is required. This is required to enable closed loop thermal control from the host. The host will throttle system memory activity to reduce power.

An 8-bit register will store the temperature. The sensor measures from 0 to 127 degrees C measured in 0.5 degree increments in a register with values from 0 to 255. Internal analog nodes (anode, cathode, etc.) of this circuit will not be brought out to package pins to keep noise at a minimum.

- Sensor Range: 0 °C - 127.5 °C
- Resolution: 0.5 °C
- Accuracy: ±3.0 °C

4.7.1 Thermal Sensor Effects on the Advanced Memory Buffer's Functional Behavior

When enabled, the results of the thermal trip points TEMPLO and TEMPMID are reported in FBD Status 0 responses following Sync commands.

If the temperature exceeds TEMPHI, errors are logged. If the TEMPHIENABLE bit in the TEMPSTAT register is set, DDR shutdown occurs and FBD links go into electrical idle mode. This over TEMPHI behavior also applies when in LAI mode. See the error chapter for a more complete description of chip behavior when TEMPHI is exceeded.

The thermal sensor does **NOT** have any effect on the behavior of the memory refresh during FBD link resets .

A temperature TEMPSTAT.INCREASING bit is also generated depending on whether the temp is greater or less than the last time the INCREASING bit was sampled. Sampling to create INCREASING bit is controlled by writes to register UPDATED. When temperature is above TEMPMID, this information also shows up in the FBDS0.Thermal_Trip register field and in the Status response of FBD Sync commands targeted to FBDS0.

5 Error Handling

5.1 Types of Errors and Responses

5.1.1 FBD Link Errors

5.1.1.1 Link Initialization Errors

Table 5.1 shows link errors that can occur during initialization.

Table 5.1 — Link Errors in Initialization

Error	Response
Multi-lane failures - unable to achieve bit lock on at least 9 of 10 SB lanes	Never come out of Training state
Multi-lane failures - unable to achieve bit lock on at least 12 NB lanes	Never come out of Training state
NB_Data_Merge_Disable - able to achieve bit lock (pass thru link data) but internal errors prevent receiving valid link cmds or merging data	Host sets NB_Merge_Disable bit in TS2 to cause DIMM to be in a pass-thru mode both SB and NB - act as a blind repeater 1. No attempt to decode commands, no response to link register RD/WR, generate no alerts, neither generate or merge any NB traffic 2. SMBus access enabled
Single Lane failure - SB and/or NB	Support normal initialization protocol and Fail Over mode if commanded by host

5.1.1.2 Errors during Channel Operation

Table 5.2 — Link Errors in Normal Operation

Error	Response
CRC Error on SB frame "A" Command - detected by 14-bit CRC (or reduced 10-bit CRC in Fail Over mode) or CRC Error on SB data or "BC" Commands in Command Frame - detected by 22-bit CRC (or reduced 10bit CRC in Fail Over mode	If CMDCRC error type enabled in EMASK Register 1. No command executed 2. 120-bit Raw SB Frame captured in RECFBD Error Log Registers 3. Type of error logged in FERR/NERR registers 4. Error/Alert Asserted bit set in FBD Status 0 register 5. Ignore future commands except Soft Channel Reset until Soft Channel Reset or Link Reset Received 6. Alert Frame sent continuously starting with NB frame in which returned data pattern would be sent if aborted command had been a config read. Alert patterns continue until Soft Channel Reset or Link Fast Reset received. **NOTE:** Will NOT close DRAM pages or place DRAM into Self Refresh until detection of Link Reset. Else ignore error

Table 5.2 — Link Errors in Normal Operation (Continued)

Error	Response
Lose transition density on channel as detected by no Sync in within 2 times the SYNCTRAININT value (typically last 84 frames). **NOTE:** Purpose of this error is not to detect violation of required transition density (6 out of 512) but to detect hang in the host and put DRAM into self refresh. Any corruption caused by lack of transitions will be detected by CRC violations.	If FEWEDGES error type enabled in EMASK Register 1. No command executed in expected Sync slot 2. 120 bit Raw SB Frame captured in RECFBD Error Log Registers 3. Type of error logged in FERR/NERR registers 4. Error/Alert Asserted bit set in FBD Status 0 register 5. DDR Self Refresh FSM triggered to put DRAMs into Self Refresh 6. Ignore future commands including Soft Channel Reset until Link Reset Received 7. Alert Frame sent continuously starting with NB frame in which returned data pattern would be sent if aborted command had been a config read. Alert patterns continue until Link Fast Reset received. Else ignore error
Access to unimplemented register	If UNIMPLCFG error type enabled in EMASK Register 1. Drop Config Write cmds 2. Capture Addr in RECCFG register if not previously set 3. Return 0's data if Config Read (or return -1 if Read addr to unimplemented function - though currently expect all functions to be used) 4. UNIMPLCFG error type logged in FERR or NERR registers 5. Error/Alert Asserted bit set in FBD Status 0 register 6. Else ignore error
Undefined command	Undefined commands with good CRC are ignored. This is not considered an error condition, and is not logged. Treat as reserved command or Channel NOP
TID error on config writes	If the TID bit on a config write matches the value of the previous TID bit, the write is ignored. The TID bit stored in the AMB is left unchanged in this case. This error does not cause an alert frame, and is not logged. The purpose of the TID bit is to allow the host to retry a config write command following a fast reset if it does not know if it had been executed prior to an alert. If the config write had occurred the TID bit will be the same, the retried write will be ignored. If it had not occurred, the TID bit will be opposite, and the retried write to will be executed.

5.1.2 DDR Errors

Table 5.3 — DDR Errors

Error	Response
Failure of software to achieve calibration	This is detected through firmware during the calibration routine. Firmware should treat the DIMM as a repeater if it is an intermediate DIMM or map it out if it is the last DIMM in the chain
DDR voltage does not power up	if normal FBD interface comes up, should at least act like a repeater. Does not bring down FBD channel - like above. DDR cmds directed at DIMM will fail to return valid responses..

5.1.3 Host Protocol Errors

AMBs are not expected to detect bad protocol from the host.

Table 5.4 — Host Protocol Errors

Error	Response
Illegal combinations of commands • see Concurrent Command Delivery Rules section of the FBD Architecture and Protocol Specification	AMB response to illegal command combinations is undefined
Commands to multiple AMBs to return data in the same return frame.	If multiple AMBs attempt to return data in the same frame, the host will see the data from the northern most AMB which is providing data, as it will replace any data sent from AMBs to its south. A host controller should not produce commands which would cause multiple AMBs to respond with data in the same frame. A special case can occur where Alert frames are being sent by one or more AMBs while another AMB is returning data from a command. These cases are discussed in the Architecture and Protocol spec in the Northbound Alert Frame section.

5.1.4 Other Errors

Table 5.5 — Other Errors

Error	Response
Overtemp - Temp > TEMPHI and overtemp enabled	If OVERTEMP error type enabled in EMASK Register 1. The OVERTEMP bit will be set in the FERR or NERR register as appropriate 2. Error/Alert Asserted bit set in FBD Status 0 register If TEMPHIENABLE set in TEMPSTAT register also 3. Shut down DDR channel: • Drive CKE low to the DRAMs and float the command, address, and data signals. CKE, ODT, and clock continue to be driven. The clocks to the DRAMS may be stopped after the CKE has been registered low 4. The FBD interface goes to electrical idle, with the receivers shut off to reduce power. 5. The core will continue to be clocked, and the Advanced Memory Buffer will respond to SMBus commands. This allows the host controller to determine the error condition **NOTE:** No recovery expected, just trying to prevent Si meltdown The AMB will remain in this state until the temperature is below TEMPHI and the OVERTEMP bit is reset via SMBus or a hardware reset. Else ignore error **NOTE:** A hardware reset will place the TEMPHIENABLE bit in its default state of disabled.
Injected alert	If INJCRC error type enabled in EMASK Register 1. No command executed 2. 120 bit Raw SB Frame captured in RECFBD Error Log Registers 3. Type of error logged in FERR/NERR registers 4. Error/Alert Asserted bit set in FBD Status 0 register 5. Ignore future commands except Soft Channel Reset until Soft Channel Reset or Link Reset Received 6. Alert Frame sent continuously starting with NB frame in which returned data pattern would be sent if aborted command had been a config read. Alert patterns continue until Soft Channel Reset or Link Fast Reset received. Else ignore error

Table 5.5 — Other Errors

Error	Response
Injected error	If INJERR error type enabled in EMASK Register 1. Type of error logged in FERR/NERR registers 2. Error/Alert Asserted bit set in FBD Status 0 register Else ignore error
No REFCLK	Reset should not be released if no REFCLK present.PLL will not achieve lock, the Advanced Memory Buffer will not come out of reset.

5.2 Error Logging

5.2.1 Error Logging Procedure

There are three basic types of errors in FBD: OverTemp, Alerts and Status Only Errors.The first occurrence of errors are flagged in the FERR register. Multiple bits can be set in this register. Subsequesnt errors are flagged in the NERR register.

Unmasked “Alert” errors generate in-band link alert messages. Unmasked “Status Only Errors” an error bit that is returned in regularly scheduled in-band status response messages that occur following Sync commands.

There are error data logs associated with some of the errors . Once the first “Alert” error has been flagged in the FERR or NERR (and matching SB frame data logged), the log registers for that error remain locked until either 1) all "Alert" error bits in the FERR and/or NERR aer cleared, or 2) a power-up reset. Once the first Unimplemented Cofiguration Register Access error has been flagged (and matching address logged), the log registers for that error cannot be over-written until 1) that bit in the FERR and/or NERR cleared or 2) a power-up reset.

5.3 Fail Over Mode Support

The Advanced Memory Buffer supports single lane Fail Over mode as described in the *FB-DMM Architecture & Protocol Specification*. This is done under host control or through the SMBus.

5.4 Failback to Pass-Thru

In general, the Advanced Memory Buffer attempts to minimize the number of Single Points Of Failure (SPOF) that could bring down the entire channel. Errors in any one lane can be mapped out with Fail Over. Errors on the DDR interface can be handled by disabling the DRAM interface and leaving the Advanced Memory Buffer in a repeater like mode. The goal is to allow the system (following a reset or fast reset sequence) to work around the bad DIMM and keep the DIMMs downstream in operation until there is time for system maintenance.

So, in the face of a number of error cases, an Advanced Memory Buffer in an intermediate DIMM should continue to operate in pass-thru mode so that NB and SB data are relayed to the next links in the channel with minimal functionality. Only the following parts of the Advanced Memory Buffer need to be healthy to support this mode:

- Clock inputs and PLL circuitry to generate FBD clocks
- Minimal core logic around FBD I/O enabling and reset
  - Reset generation
  - Bit lock detection.
- at least N-1 FBD lanes operational in NB and SB channels

6 Transparent Mode

6.1 Transparent Mode

Refer to the JEDEC publication: *FB-DIMM Draft Specification: Design for Test, Design for Validation (DFx) Specification* for information regarding Transparent Mode.

Transparent mode is designed to allow access to the DRAM behind the AMB. In this mode high speed pins are converted into low speed pins and mapped to DRAM pins. The objective is to allow the use of existing test equipment and manufacturing processes. The tester must be capable of operation at 200 MHz. Transparent mode offers potential improvements in test capacity over traditional DIMMs. In this mode, FBD requires only 60 active pins to test the DIMM.

Data from the tester is 16 bits wide at 200 MHz (single data rate). The data rate is doubled and the width halved on the way to the DRAM (by clocking out 8 bits of data on the rising edge of the clock and the remaining 8 bits on the falling edge).

The tester will drive data to be written to the DRAM on a write pass and data to be compared on a read. DRAM data and the expected data from the tester is compared in the AMB. If the actual and expected data differ the pass/fail outputs will indicate which DRAM failed.

6.1.1 Block Diagram

The data paths for transparent mode will bypass all link logic and normal DRAM control logic. The DDR interfaces are used intact. Figure 6.1 is a block diagram of the Advanced Memory Buffer part in transparent mode.

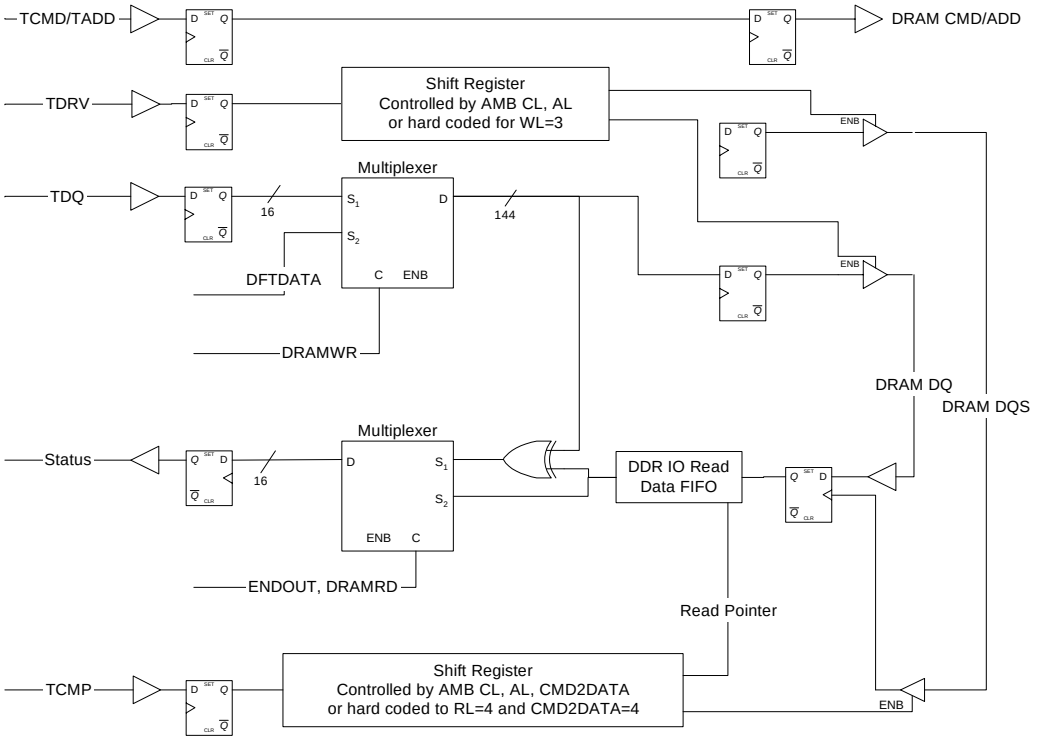

Figure 6.1 — Transparent Mode Simplified Block Diagram

6.1.2 Transparent Mode Signal Definitions

When the transparent mode is enabled. The FBD differential input pins designed in the Advanced Memory Buffer part become two single ended inputs. In transparent mode the FBD input pins require 0 to 500mV swing (half of the normal differential input voltage). Input slew rates should be at least 2V/ns or faster. This parameter is not critical, but it must be fast enough to be recognized by the AMB receiver. The DDR pins will operate with normal DDR2 timings and levels.

The AMB clock input pins will be used for transparent mode as well as normal mode. This also allows use of most of the existing on-chip clock distribution network

Table 6.1 — Additional Signals in Transparent Mode

Transparent Mode Signal Name	Pin Count	Frequency	Direction	Definition
TCKE[1:0]	2	200 MHz	In	Controls CKE[1:0]{A,B}
TCS#[1:0]	2	200 MHz	In	
TODT	1	200 MHz	In	Controls both ODT[1:0]{A,B}
TRAS#	1	200 MHz	In	
TCAS#	1	200 MHz	In	
TWE#	1	200 MHz	In	Controls $\overline{WE}${A,B}
TBA[2:0]	3	200 MHz	In	
TA[14:0]	15	200 MHz	In	
TDRV	1	200 MHz	In	Tester signal to drive data on writes
TCMP	1	200 MHz	In	Tester signal to compare on reads
TDQ[15:8]	8	200 MHz	In	Early data to each byte
TDQ[7:0]	8	200 MHz	In	Late data to each byte
TPF[8:0] or TDQO[15:0]	9 or 16	200 MHz	Out	Used for pass/fail (8:0) or direct access (15:0)
Sum of receivers Sum of drivers	44 16			

6.1.3 Transparent Mode to FBD Pin Mapping

The FBD pin mapping is shown in Table 6.2.

Table 6.2 — Mapping of FBD Pins in Transparent Mode

FBD Pin Name	Count	Speed	Transparent Mode Signal Name	Comment
SN[0], $\overline{\text{SN}}$[0]	2	200 MHz	TCKE[1:0]	
SN[1], $\overline{\text{SN}}$[1]	2	200 MHz	TCS#[1:0]	
SN[2],	1	200 MHz	TODT	
$\overline{\text{SN}}$[2]	1	200 MHz	TRAS#	
SN[3],	1	200 MHz	TCAS#	
$\overline{\text{SN}}$[3]	1	200 MHz	TWE#	
SN[4], $\overline{\text{SN}}$[4] SN[5]	3	200 MHz	TBA[2:0]	
SN[13:6], [13:6]	16	200 MHz	TA[15:0]	
PS[8]	1	200 MHz	TDRV	
$\overline{\text{PS}}$[8]	1	200 MHz	TCMP	
PS[7:0]	8	200 MHz	TDQ[15:8]	early data
$\overline{\text{PS}}$[7:0]	8	200 MHz	TDQ[7:0]	late data
SS[8:0]	9	200 MHz	TPF[8:0]	Pass/Fail mode (TRANSCFG.ENDOUT =0)
PN[13:7], SS[8:0]	16	200 MHz	TDQO[15:0]	Data output mode (TRANSCFG.ENDOUT =1)
Total Pins				

6.1.4 Clock Frequency and Core Timing

The DDR2 DRAM clock frequency is 200 to 400 MHz but core timings require several clocks (or nS) to complete.

For example on DDR2 667:

- tCL, tRP and tRCD are 4 clocks or 12 ns
- tRC is 57 ns
- tRRD is 7.5 ns

DDR2 transactions are burst-oriented, reading or writing 4 or 8 words of data across 4 or 8 clock edges. Assuming a 4 bit burst, a x8 DRAM will transfer 32 bits on successive edges of 2 DRAM clock cycles. On the tester side of the interface the same 32 bits of data is transferred, 16 bits at a time, over two DRAM cycles.

Command, address and data edges should be reasonably close to the appropriate clock edge but with some margin of error. DRAM setup and hold times are 400 to 600pS, while the half cycle time is at least 1250pS. As long as the data is within ¼ cycle (625pS) of the clock edge it will not violate setup or hold. Since there will be other error terms (DIMM trace length matching, jitter etc.) it is recommended the tester be accurate to +/-300pS.

6.1.5 Transparent mode timing

Normally, transparent mode will use DDR2-400 timing even if the DRAM is rated for faster operation. Optionally an AMB may support operation at frequencies higher than 200MHz.

To set up transparent mode the appropriate AMB registers should be set to AL=0, CL=4 and CMD2DATA=4. Some AMBs may default to these values, in which case programming has no effect. These values establish an internal timing relationship as illustrated in the following figures. Optionally other register values may be supported for special test cases.

Actual placement of DRAM read/write or other commands is dependent on the incoming signals, not the AMB register values. Figure 6. shows an example of a write, read, write sequence using incoming signals that correspond to WL=4 and RL=5. The timing relationships in red (normal font) are fixed relationships (established by the AMB register settings above). These edges will move together. The relationships in green (italic font) are the DRAM timings, which are under control of the tester.

Timing may be changed on the fly (e.g., in the middle of a test pattern) by changing the placement of edges from the tester. DRAM mode registers can be programmed on the fly as needed by including (E)MRS commands in the tester data stream. There is no need to change AMB settings during a test. The only exception is that DRAM BL may be changed on the fly but the data logging logic may get confused if DRAM BL does not match the BL expected by the data logger. All other DRAM settings such as AL and CL may be changed at any time.

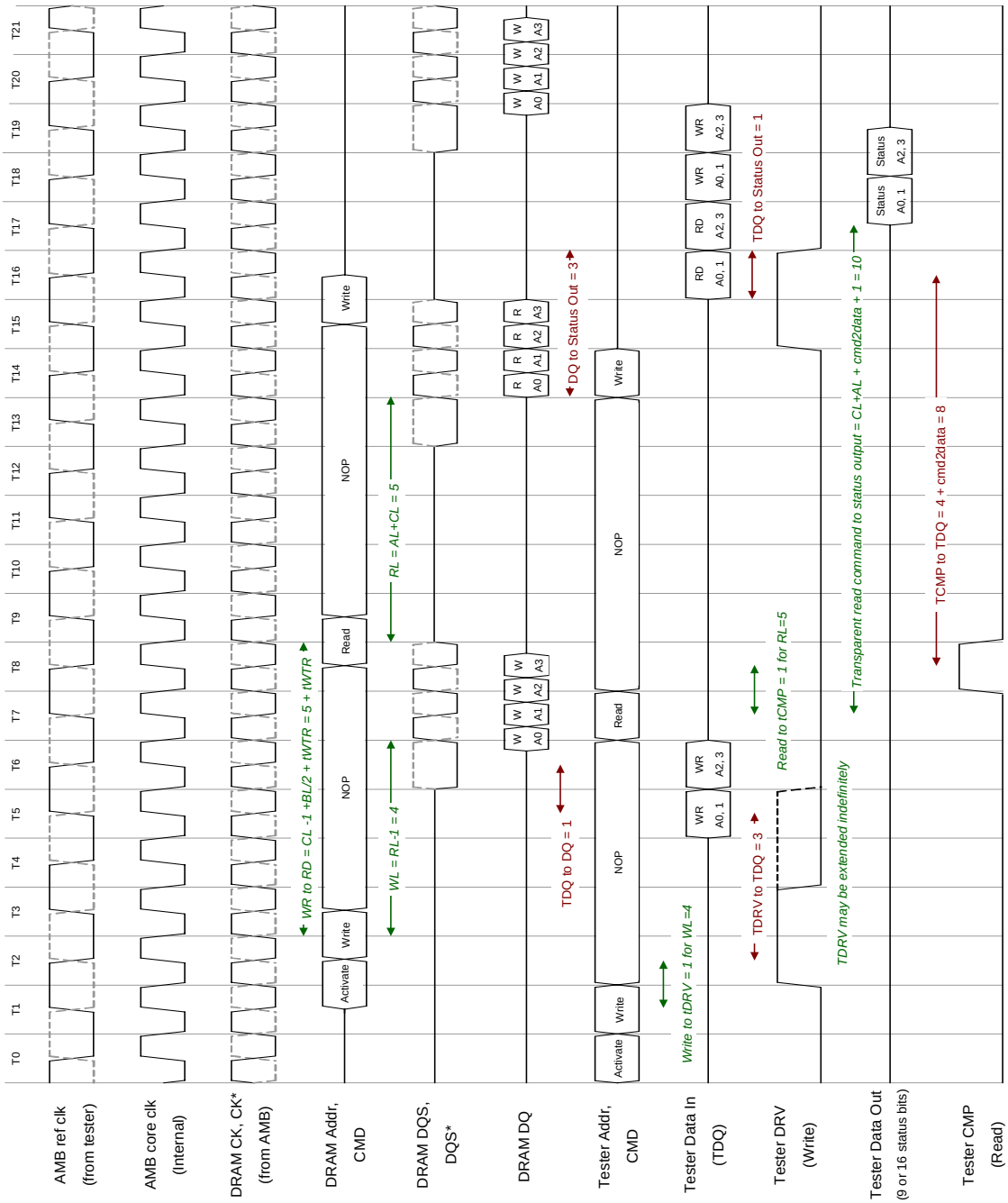

Figure 6.2 — Transparent Mode Timing

6.1.5.1 Write timing

Figure 6. illustrates write timing with the tester set to WL=3, 4, and 5. There is a constant offset of three cycles from TDRV to TDQ and one cycle from TDQ to DRAM DQ. The DRAM mode registers must, of course, be set to the appropriate timing to recognize the read. For BL=8 the TDRV pulse will be 4 clocks wide rather than 2.

6.1.5.2 Extended write timing

The TDRV pulse may be extended indefinitely in cases where it is necessary to apply constant data to the DRAM pins. As long as TDRV remains asserted the AMB will continuously propagate data from the tester TDQ inputs through to the DRAM DQ pins (delayed by 1 cycle) as indicated below.

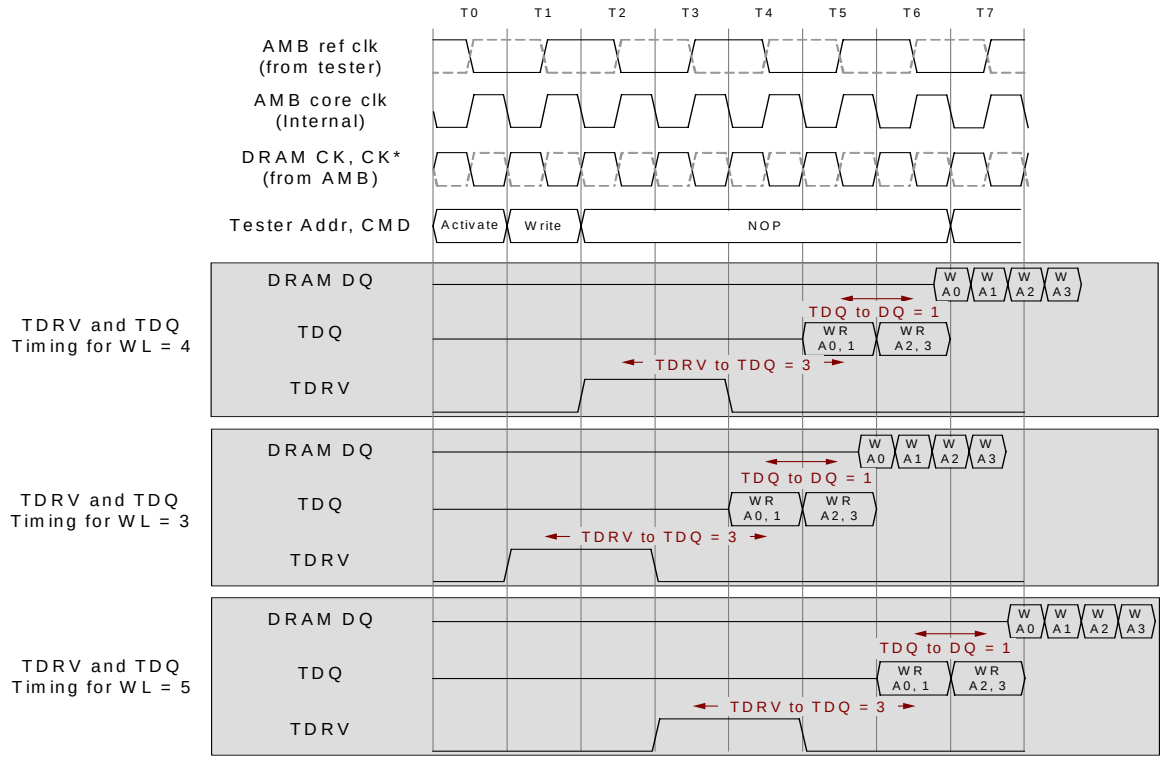

Figure 6.3 — Transparent mode write timing

6.1.5.3 Read timing

Figure 6. shows read timing with the tester set to RL=3 and RL=5. Due to complexities in the handling of read data in an AMB there is a latency of several cycles from the TDRV pulse to TDQ and test status outputs. Specifically there is a constant latency of four cycles plus the programmed CMD2DATA value from TDRV to TDQ (8 cycles total using the AMB settings above) and one cycle from TDQ to DRAM DQ. An AMB may support shorter latencies but this is not required.

TCMP is latched on the rising edge of core clock. This initiates the read inside the AMB. In most cases the AMB will latch DRAM read data slightly before TDQ data is needed. The reason is most AMBs will load DDR data into a queue in the DRAM domain and unload the data on a core clock edge. TDQ is typically not needed until the DRAM data is in the core. The comparison of actual and expected data and propagation back to the tester will occur on the next core clock edge.

The timings below are for BL=4. When testing BL=8 the TCMP pulse should be 3 clocks wide rather than 1. Tester DQ data, DRAM data and the status outputs will be extended appropriately to cover the burst length.

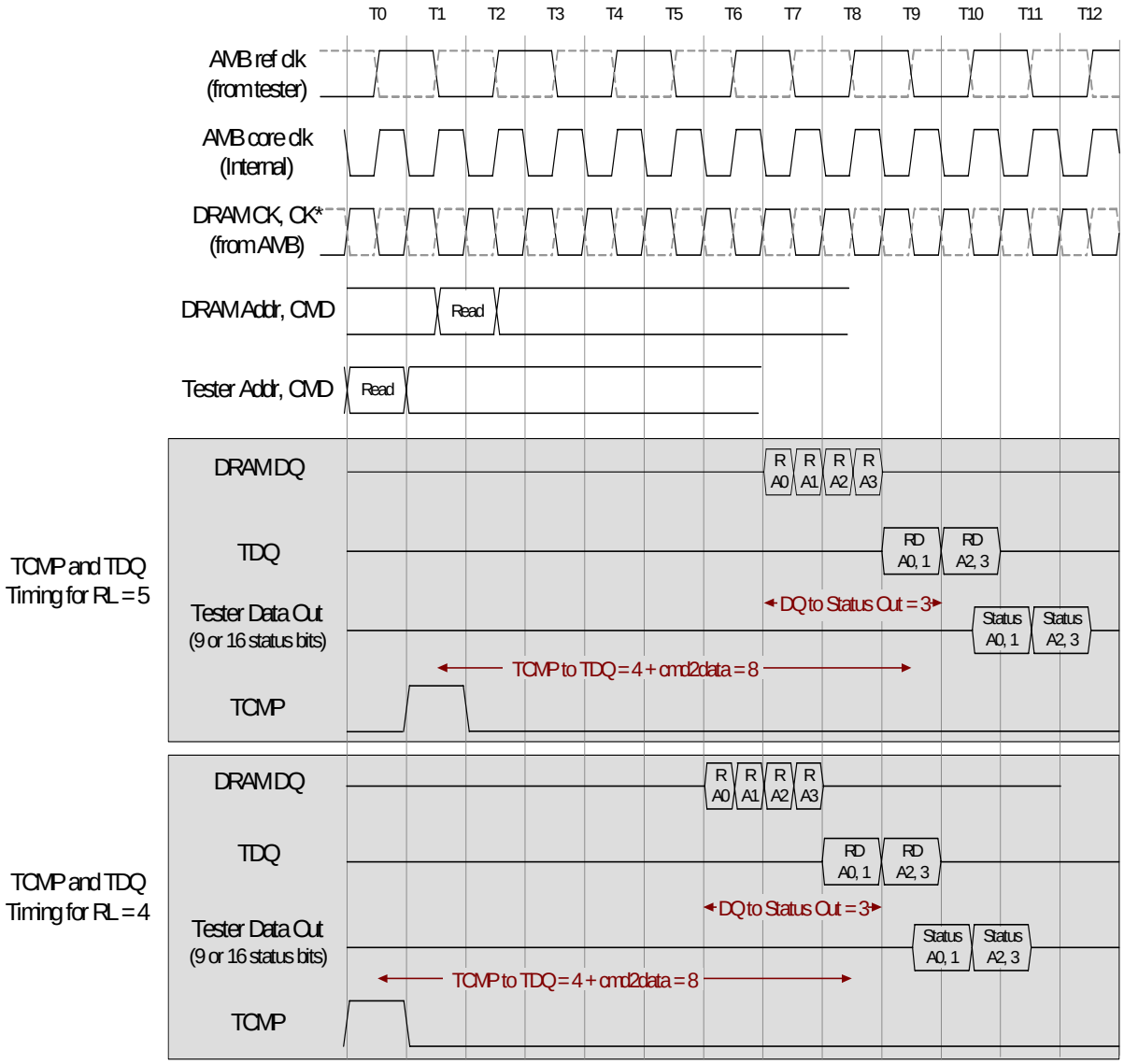

Figure 6.4 — Transparent mode read timing

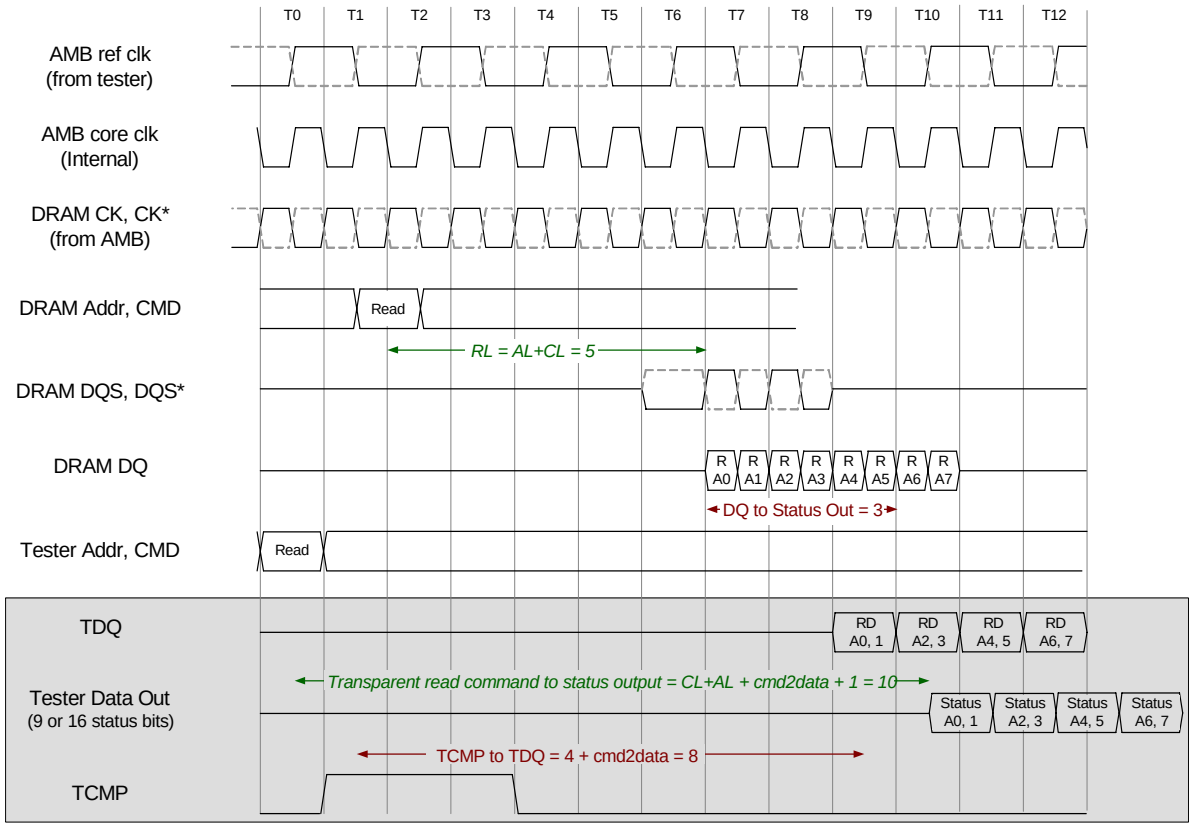

Figure 6.5 — BL=8 Read timing

6.1.6 Error reporting

By default the status pins will be the xor of actual data from the DRAM and expected data from the tester. The AMB also stores 144 bits of DQ data. If the LGFBITS control bit is cleared the 144 bits of data will be actual data read from the DRAM. Otherwise the result of the data compare is stored. In either case the tester must still provide expected data for the AMB to properly set the status pins.

Normally the test will stop when an error occurs. It is the responsibility of the tester or test program to track errors, read error registers and stop or continue as appropriate. This may require multiple iterations of the same test to execute, collect data and re-start the test.

6.1.6.1 Multiple failures

There are some implications if multiple failures occur in the same DRAM burst. Three control register bits determine how these failures should be captured. If the log first fail (LGFFAIL) bit is set, the AMB will record only the first failure in a burst. When the bit is cleared (default), the AMB will record the last failure at the burst position matching the burst position (BSTPOS) setting. If the LGFFAIL bit is set and an error is logged, no further logging will occur until the bit is cleared.

a) If a failure is detected only in one half of the burst (first and second or third and fourth data words), the error pins will indicate which DRAM or DRAMs failed. The error register will indicate which data lines failed and in which data words.

b) If a failure is detected in both halves of the burst (data word 1 or 2 and words 3 or 4), data from the second failure will overwrite data from the first failure. By default this is prevented by the log fail bit. The error pins will continue to operate correctly. If it is desired to collect data from a specific portion of the burst the burst position bits can be used to select an appropriate burst position to record. For a 4 bit burst it is possible to select data from the first or second half of the burst. For an 8 bit burst there are four positions to choose from. These mappings are illustrated in the following figure.

Table 6.3 — Mapping of burst position bits to error capture

Log First Fail	**Burst Position**		BL=4			
Bit0	Bit1	Bit0	1	2	3	4
1	x	x	144 bits*		or 144 bits*	
0	0	0	144 bits			
0	0	1			144 bits	

Log First Fail	**Burst Position**		BL=8							
Bit0	Bit1	Bit0	1	2	3	4	5	6	7	8
1	x	x	144 bits*		or 144 bits*		or 144 bits*		or 144 bits*	
0	0	0	144 bits							
0	0	1			144 bits					
0	1	0					144 bits			
0	1	1							144 bits	

* the first failure will be saved in whatever burst position it occurs

6.1.6.2 Direct Access - Testing of individual DRAMs

In certain cases it is desirable to test one or two DRAMs. Transparent mode allows direct access to a single x8 or two x4 DRAMs. In this mode 8 DDR DQ pins are demultiplexed onto 16 SDR status pins, providing16 bit input data path (on TDQ) and a 16 bit output data path on the status pins.

The transparent mode configuration register has one bit (ENDOUT) to enable this mode. On reads, the DRAMRD bits will select the bytes of DRAM data to be presented on the status pins. On writes the DRAMWR bits select a DRAM to receive data from the TDQ bus. A separate register holds 8 bits of default data to be applied to non-selected DRAMs in the early/even cycles and another 8 bits for late/odd cycles. The mapping of these bits to DQ selection is illustrated in the following table.

Table 6.4 — Selection of 8 bit data paths when ENDOUT is set

DRAM RD/WR	DQ	Early Data DQ Byte	Late Data DQ Byte
0xF (DRAM WR only)	all bytes		
8	71:64	8	17
7	63:56	7	16
6	55:48	6	15
5	47:40	5	14
4	39:32	4	13
3	31:24	3	12
2	23:16	2	11
1	15:8	1	10
0	7:0	0	9

DRAMWR is the byte of data bus selected to receive transparent write data, and byte of data bus to be compared against transparent read data. DRAMWR allows a setting of 0xF (all ones) which sends the TDQ input data to all DQ bytes. DRAMRD is the byte of data bus selected to be output on transparent data/status pins when ENDOUT bit is set.

6.1.7 Transparent mode IO specifications

Listed below are the specifcations for transparent mode input and output pins.

Table 6.5 — Transparent mode FB-DIMM interface signaling specifications

	Minimum	Maximum	Units
I/O voltage swing	0	500	mV
Input slew rate	2	-	V/ns
Input to refclk setup time	3000	-	ps
Input to refclk hold time	1000	-	ps
Status output valid to refclk time	-1000	+1000	ps
Vref	200	300	mV
Vil (DC)	-300	200	mV
Vil (AC)	-300	150	mV
Vih (DC)	300	900	mV
Vih (AC)	350	900	mV
Voh	400	-	mV
Vol	-	100	mV
Ioh	8	-	mA
Iol	12	-	mA
Ioh: current into a 50-ohm external load to ground, with on-die transmitter termination enabled Iol: current into a 50-ohm external load to 1.5V supply rail, with on-die transmitter termination enabled			

6.1.8 IO implementation guidelines

6.1.8.1 Dedicated receivers

Simple one-stage receivers for the transparent mode have been added in parallel to the existing high-speed sampling receivers. The latter can be turned off during transparent mode, as well as the DRC and the phase interpolator, to save power and avoid noise. An internal VREF set to 0.25V will be used, so the tester signals should oscillate between 0 and 0.5V. The transparent mode RX should be turned off during normal mode, so as to save power/avoid noise.

6.1.8.2 Common clock scheme

To avoid costly implementations using strobes and FIFOs, a common clock scheme is followed, implemented in the core, where the data capture flops reside. Since transparent mode data signals from the tester are all in phase with the 100MHz system clock, the clock used for the capture flops has to be aligned with the external system clock (or slightly delayed, to account for the propagation delay difference between data receivers and clock receiver).

Aligning core clock and external clock can be done using the HVM mode circuitry included in the PLL. The HVM clock tree will have to feed the capture flops, and one of its leaves has to be fed back to the PLL, in order to achieve adequate synchronization.

6.1.8.3 Tester interface clock and data routing

The following uncertainties have to be factored in:

- Tester board (TIU) trace mismatches
- Package trace mismatches
- FBD low speed RX propagation delay variations due to PVT
- Set up and hold of capture flops (typically <350ps depending on process, voltage and temperature)
- Clock synchronization mismatch, core clock PLL and tree jitter (approximately +/-200pS)

At 200MHz, there is a 5ns data window. The potential FBD low speed receiver variation is approximately 300ps propagation variation over process, voltage and temperature. Package and tester interface mismatches are not expected to exceed 200ps. Flop setup variation should also be less than 200pS. After removing 400ps for clock uncertainties leaves 3.9ns margin. While this is plenty of margin, some amount of trace matching should be done on the tester interface to minimize skew.

6.1.8.4 Outgoing control signals

Only the TX+ pin should connect to the tester. The data on TX- can be discarded (it will toggle at the same rate as TX+).

Terminating TX+ on the tester should be a given, as every tester offers this capability. Terminating TX- could be done on the tester, by having a TIU (tester board) with a route and a tester connection allocated for it. It may be cheaper to just have a 50 ohm resistor tied to ground on the TIU itself, from the TX- pins.

To avoid the crossing clock domains from core clock to FBD fast clocks, the transparent mode data flows directly through the Analog Front-end Unit of the TX.

6.1.8.5 Usage models

6.1.8.5.1 Host side usage

TX: The transmitters are set the same as in normal operation (bias on, enable termination, etc.).

RX: RX+ and RX- signals will be independent. Incoming data will free-flow through the I/O (no flops). The routing distance from transparent_rxout pins should be the same for all capture flops. All these flops should be clocked by the dedicated HVM clock.

6.1.8.5.2 Tester side usage

The tester interface should have trace-matched data signals, to avoid skews > 1ns. The tester should have 50 ohm terminations to ground for all TX pins in use (on-tester termination can be used where applicable). The tester should enable 50 ohm terminations to ground for all the signals sent to RX pins. This will guarantee reasonable signal integrity.

6.2 Transparent Mode Control and Status Registers

In transparent mode, CSRs will be accessed and programmed through SMBus. See Section 12, “Configuration Registers,” for register descriptions.

§

7 SMBus Interface

The Advanced Memory Buffer has configuration registers that provide flexibility and allow for testing and optimization of the chip. Upon system reset (RESET#), configuration registers are reset to predetermined default states, representing the minimum feature set required to successfully bring up a nominal channel. It is expected that the BIOS will properly determine and program the optimal configuration settings.

For all of these registers, the Advanced Memory Buffer supports register access mechanisms through SMBus as well as through in-band channel commands.

7.1 System Management Access

System Management software in the platform can initiate system management access to the configuration registers. This can be done through SMBus accesses.

The mechanism for the Server Management (SM) software to access configuration registers is through a *SMBus Specification*, Rev. 2.0-compliant slave port. Advanced Memory Buffer components contain this slave port and allow access to the configuration registers.

SMBus operations are made up of two major steps: (1) writing information to registers within each component and (2) reading configuration registers from each component. The following sections will describe the protocol for an SMBus master to access an Advanced Memory Buffer component's internal configuration registers. Refer to the *SMBus Specification*, Rev. 2.0 for the bus protocol, timings, and waveforms.

7.1.1 SMBus 2.0 Specification Compatibility

The principal requirement from the SMBus 2.0 specification is support of the "high power" bus electrical specifications described in the layer 1 (Physical layer) chapter.

For the simple register access requirements of FBD, no layer 2 (Link layer) or layer 3 (Network layer) extensions provided by the 2.0 specification are used. In particular, there is no support for Address Resolution Protocol (ARP) since FBD is using fixed addresses. Additionally, only a subset of the network packet protocols described in the specification are needed and these are described below.

AMB's are required to support read and write transactions without requiring clock stretching in order to simplify host controller requirements. For similar reasons, AMB's should not master SMBus transactions in normal operation.

7.1.2 Supported SMBus Commands

The Advanced Memory Buffer components SMBus Rev. 2.0 slave ports support register reads and writes built out of the following SMBus primitive commands:

Block Write Byte Write

Block Read Byte Read

The slave address for each primitive SMBus transaction are determined from the SA pins.

- For normal FBD DIMMs: ;
  - Slave Address[6:3] = 4'b1011
  - Slave Address[2:0] = SA[2:0]
- For repeaters or LAI AMBs: ;
  - Slave Address[6:3] = 4'b0011
  - Slave Address[2:0] = SA[2:0]

Each SMBus transaction has an 8-bit command driven by the master. The format for this command is illustrated in Table 7.1.

Table 7.1 — SMBus command Encoding

7	6	5	4	3:2	1:0
Begin	End	Rsvd	PEC_en	Internal Command: 00 - Read DWord 01 - Write Byte 10 - Write Word 11 - Write DWord	SMBus Command: 00 - Byte 01 - *Rsvd* 10 - Block 11 - *Rsvd*

The *Begin* bit indicates the first transaction of a read or write sequence.

The *End* bit indicates the last transaction of a read or write sequence.

The *PEC_en* bit enables the 8-bit PEC generation and checking logic.

The *Internal Command* field specifies the internal command to be issued by the SMBus slave logic. Note that the Internal Command must remain consistent (i.e. not change) during a sequence that accesses a configuration register. Operation cannot be guaranteed if it is not consistent when the command setup sequence is done.

The *SMBus Command* field specifies the SMBus command to be issued on the bus. This field is used as an indication of the length of transfer so the slave knows when to expect the PEC packet (if enabled).

Reserved bits should be written to zero to preserve future compatibility.

7.1.3 FBD AMB Register Access Protocols

Sequences of these basic commands will initiate internal accesses to the component's configuration registers.

Each configuration read or write first consists of an SMBus write sequence which initializes the register's address . The term sequence is used since these variables may be written with a single block write or multiple byte writes. Once these parameters are initialized, the SMBus master can initiate a read sequence (which performs a configuration read) or a write sequence (which performs a configuration write).

Table 7.2 — SMBus Protocol Addressing fields

Address Field Name	Bits	Description
Reserved	7:0	Reserved - AMB may alias all these addresses to 00h
Dev	4:0	Reserved - AMB may alias all these addresses to 00h
Function	2:0	Function Address
Reg_Num[15:]	7:0	Reserved - AMB may alias all these addresses to 00h
Reg_Num[7:0]	7:0	Register Address within Function

7.1.3.1 Configuration Register Read Protocol

Configuration reads are accomplished through an SMBus write(s) and later followed by an SMBus read. The write sequence is used to initialize the Bus Number, Device, Function, and Register Number for the configuration access. The writing of this information can be accomplished through any combination of the supported SMBus write commands (Block, Byte). The *Internal Command* field for each write should specify Read DWord.

After all the information is set up, the last write (*End* bit is set) initiates an internal configuration read. If an error occurs during the internal access, the last write command will receive a NACK. A status field indicates abnormal termination and contains status information such as target abort, master abort, and time-outs. The status field encoding is defined in the following table.

Table 7.3 — Status Field Encoding for SMBus Reads

Bit	Description
7	Reserved
6	Reserved
5	Reserved
4	Internal Target Abort
3:1	Reserved
0	Successful

Examples of configuration reads are illustrated below. All of these examples have PEC (Packet Error Code) enabled. If the master does not support PEC, then bit 4 of the command would be cleared and there would not be a PEC phase. For the definition of the diagram conventions below, refer to the *SMBus Specification*, Rev. 2.0. For SMBus read transactions, the last byte of data (or the PEC byte if enabled) is NACKed by the master to indicate the end of the transaction. For diagram compactness, “Register Number[]” is also sometimes referred to as “Reg Number” or “Reg Num”.

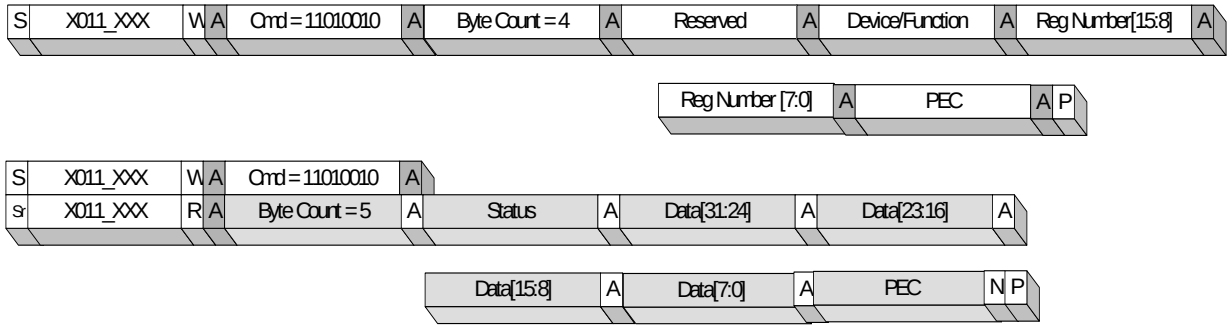

Figure 7.1 — SMBus Configuration Read (Block Write / Block Read, PEC enabled)

The following example uses byte reads.

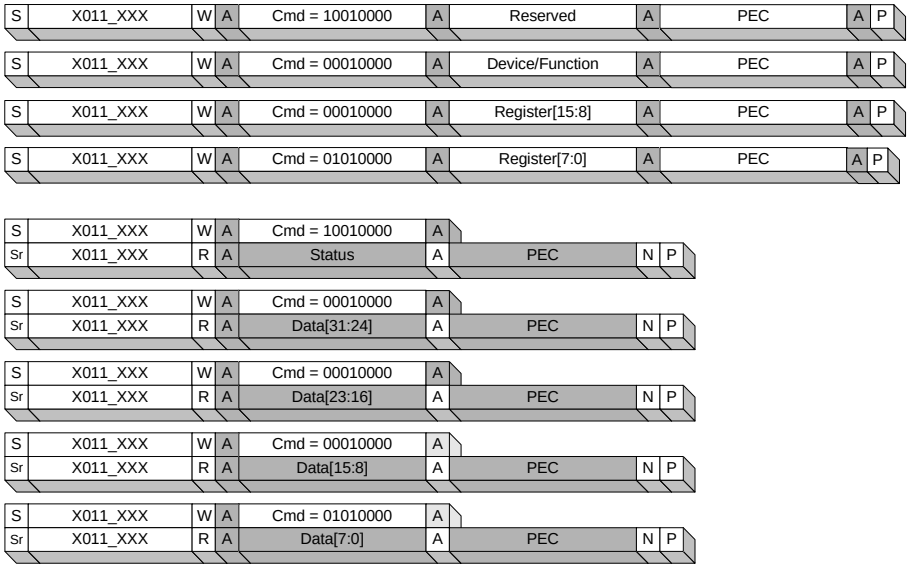

Figure 7.2 — SMBus Configuration Read (Write Bytes / Read Bytes, PEC enabled)

7.1.3.2 Configuration Register Write Protocol

Configuration writes are accomplished through a series of SMBus writes. As with configuration reads, a write sequence is first used to initialize the Bus Number, Device, Function, and Register Number for the configuration access. The writing of this information can be accomplished through any combination of the supported SMBus write commands (Block, Byte).

On SMBus, there is no concept of byte enables. Therefore, the Register Number written to the slave is assumed to be aligned to the length of the Internal Command. In other words, for a Write Byte internal command, the Register Number specifies the byte address. For a Write DWord internal command, the two least-significant bits of the Register Number are ignored. This is different from PCI where the byte enables are used to indicate the byte of interest.

After all the information is set up, the SMBus master initiates one or more writes which sets up the data to be written. The final write (*End* bit is set) initiates an internal configuration write. If an error occurred, the SMBus interface NACKs the last write operation just before the stop bit.

Examples of configuration writes are illustrated below. For the definition of the diagram conventions below, refer to the *SMBus Specification*, Rev. 2.0.

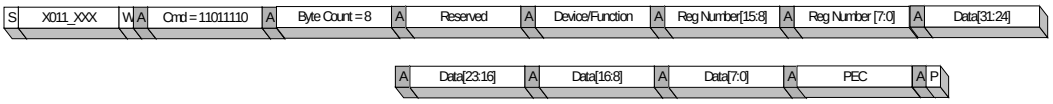

Figure 7.3 — SMBus Configuration Double Word Write (Block Write, PEC enabled)

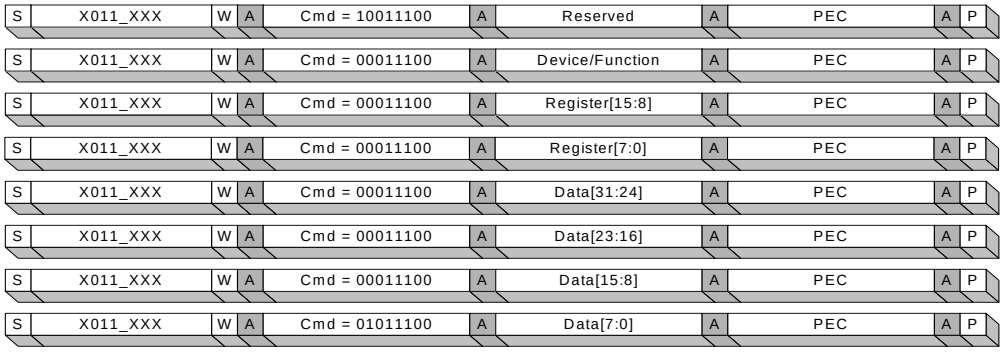

Figure 7.4 — SMBus Configuration Double Word Write (Write Bytes, PEC enabled)

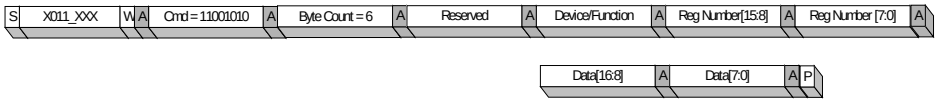

Figure 7.5 — SMBus Configuration Word Write (Block Write, PEC disabled)

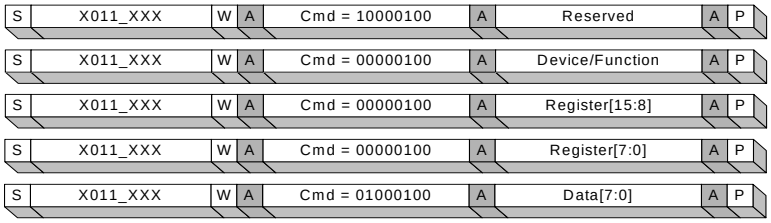

Figure 7.6 — SMBus Configuration Byte Write (Write Bytes, PEC disabled)

7.1.4 SMBus Error Handling

The SMBus slave interface handles two types of errors: internal and PEC. These errors manifest as a Not-Acknowledge (NACK) for the read command (*End* bit is set). If an internal error occurs during a configuration write, the final write command receives a NACK just before the stop bit. If the master receives a NACK, the entire configuration transaction should be reattempted.

If the master supports packet error checking (PEC) and the PEC_en bit in the command is set, then the PEC byte is checked in the slave interface. If the check indicates a failure, then the slave will NACK the PEC packet.

7.1.5 SMBus Resets

7.1.5.1 SMBus transactions during FBD Link Fast Reset

When the FBD link transitions into Electrical Idle (disable state) from an active state, this causes a “fast” reset of all non-sticky registers in the AMB. SMB transactions underway during a “fast” reset will not complete normally.

Generally, this is not a problem since SMBus accesses are only required prior to initial link turn-on or for diagnostic access when a link can not be initialized. It is the host’s responsibility to monitor for SMBus transactions during a fast reset and retry these transactions when the link is stable.

Generally, an interrupted transaction will result in the AMB as slave not properly acknowledging the Master. This protects write transactions. However, if a read transaction has proceeded to the point where the slave no longer acknowledges the master, read data can be lost when the SMBus state machine is reset. If PEC is enabled, this data loss will be detected as a PEC error.

The host restricting usage of SMBus to when the link is idle or monitoring “fast resets” and retrying transactions that are interrupted is the safest SMBus access method.

7.1.5.2 SMBus Interface State Machine Reset

The slave interface state machine can be reset by the master in two ways :

- The master holds SCL low for 25ms cumulative. Cumulative in this case means that all the “low time” for SCL is counted between the Start and Stop bit. If this totals 25ms before reaching the Stop bit, the interface is reset.
  - — Timing is set up to be 25ms for DDR2-800 and may scale up at lower frequencies
    - * 30ms at DDR2-667
    - * 37.5ms at DDR2-533
- The master holds SCL continuously high for 50us.
  - — Timing is set up to be 50us for DDR2-800 and may scale up at lower frequencies
    - * 60us at DDR2-667
    - * 75us at DDR2-533

7.1.5.3 SMBus transactions during hard reset

Since the configuration registers are affected by the reset pin, SMBus masters will NOT be able to access the internal registers while the system is reset.

8 Clocking

8.1 Advanced Memory Buffer Clock Domains

There are three main clock domains in the Advanced Memory Buffer. The FBD link domain is a 12x multiple of the core clock. The DDR data-rate domain is 2x the core clock. The core domain frequency equals the DDR command-rate, and is a 2x multiple of the external reference clock. The ratio between these domains remains fixed..

8.2 PLL Clocks

The PLL receives a reference clock at 1/2X, where X is the DDR command frequency. The PLL generates the internal clocks.

8.3 Reference Clock

A low-jitter differential reference clock (REFCLK) is routed to the host and each DIMM from a common clock source on the system board. This reference clock uses HCSL (High-Speed Current Steering Logic) signaling and its detailed requirements are documented in the FB-DIMM Draft Specification: High Speed Differential P2P Link at 1.5V[ref tbd]. The Advanced Memory Buffer uses the reference clock to generate internal buffer clocks and to generate the clocks to the DRAMs located on each DIMM. The frequency of the reference clocks (133 to 200 Mhz) is one half the frequency of the DRAM base clock (267 to 400 Mhz), i.e., it is one half the command-rate of the DRAM devices located behind the Advanced Memory Buffer. For example, for DDR2 667 DRAM devices the reference clock frequency would be 167 MHz. The reference clock is the basis for the various Core, FBD and DDR internal clocks.

It is a requirement for the FBD channel to operate in the presence of Spread Spectrum Clocking (SSC), which is commonly used to reduce EMI. The reference clocks for FBD have to meet a jitter specification.

The reference clocks to the host and each DIMM are mesochronous, i.e. they have an unknown but fixed phase relationship to each other or the memory channel. This simplifies PCB routing since no precise length matching is required. However an upper bound for the clock length mismatch is necessary since the maximum phase difference between the data sent out with the transmitter clock and the receiver clock needs to be limited in the presence of SSC. It is required that all the reference clocks for a given FBD channel originate from a single clock source, e.g. a common clock synthesizer or clock oscillator, and travel through the same jitter spectrum modifying components (e.g. PLL clock buffer) thereby ensuring that there is no frequency mismatch or frequency drift between FBD agents.

The PLL will also operate with the REFCLK at 100 MHz during special transparent mode testing. Since there is no high speed link operation, there can be looser requirements for jitter and no SSC.

8.4 FBD Lane Frame Clocks

Each FBD I/O lane also sources a frame clock at core frequency that is matched to the parallel data sourced by the lane. These are used during initialization to capture data in training sequences and to align data across the link.

8.5 Clock Ratios

The core, DDR and FBD link clock domains are fixed in a 1:2:12 ratio. The SMBus asynchronous subsystem need not scale. The supported clock ratios are shown in Table 8.1.

Table 8.1 — Advanced Memory Buffer Clock Ratios

FBD Link Data Rate	DDR Data Rate	Core Frequency	Ref Clk	FBD Link : Core	Core : DDR
3.2 Gb/s	533 Mb/s	266 MHz	133 MHz	12 : 1	1 : 2
4.0 Gb/s	666 Mb/s	333 MHz	167 MHz	12 : 1	1 : 2
4.8 Gb/s	800 Mb/s	400 MHz	200 MHz	12 : 1	1 : 2

Note: The clock tolerance for the reference clock is -5%, +0.05%. This is reflected in Table 3-1 of the “FB-DIMM Draft Specification: High Speed Differential PTP Link at 1.5V”. Because of this, the FBD Link Data Rate will support the same tolerance (i.e. -5% and +0.05%) as well.

8.6 DDR DRAM Clock Support

The DDR command clocks (CLK[3:0], $\overline{\text{CLK}}$[3:0]) are generated by the Advanced Memory Buffer. They operate at 1X the core frequency for DDR2.

The write strobes operate at the same frequency as the CLK/$\overline{\text{CLK}}$ signals. Write data and check bits are aligned to both the rising and falling edges of the write strobe.

The source-synchronous read strobes operate at the same rates as the write strobes. Each read strobe will be individually aligned with its portion of the data and check-bits.

8.7 Clock Pins

Table 8.2 — Clock Pins

Pin Name	Pin Description
SCK	Advanced Memory Buffer clock
SCK	Advanced Memory Buffer clock (Complement)
VCCAPLL	analog power supply for PLL
VSSAPLL	analog ground for PLL
SCL	SMBus clock
CKE[1:0]{A,B}	DDR clock enables
CLK[3:0]	DDR clocks
$\overline{\text{CLK}}$[3:0]	DDR clocks (Complements)
DQS[17:0]	DDR data/check-bit strobes
$\overline{\text{DQS}}$[17:0]	DDR data/check-bit strobes (Complements)

8.8 PLL Requirements

8.8.1 Jitter

See the FB-DIMM Draft Specification: High Speed Differential P2P Link at 1.5V[ref tbd] for more details.

8.8.2 PLL Bandwidth Requirements

See the FB-DIMM Draft Specification: High Speed Differential P2P Link at 1.5V[ref tbd] for more details.

8.8.3 External Reference

See the FB-DIMM Draft Specification: High Speed Differential P2P Link at 1.5V[ref tbd] for more details.

8.8.4 Spread Spectrum Support

See the FB-DIMM Draft Specification: High Speed Differential P2P Link at 1.5V[ref tbd] for more details.

8.9 Analog Power Supply Pins

Separate filtered power pins are available for use by a PLL if needed.

Warning: The filters are NOT to be connected to board Vss. The ground connection of the filters will be routed through the package and grounded to on-die Vss.

This Page Intentionally Left Blank

9 Pin Descriptions

9.1 Pin Description

Table 9.1 — Buffer Signal Types

Buffer Direction	Description
I	Input signal
O	Output signal
A	Analog
I/O	Bidirectional (input/output) signal
NC	No Connect.

Table 9.2 — Pin Description (Sheet 1 of 3)

Signal	Type	Description
Channel Interface		
PN[13:0]	O	**Northbound Output Data:** High speed serial signal. Read path from AMB toward host on primary side of the DIMM connector.
$\overline{\text{PN}}$[13:0]	O	Northbound Output Data Complement
SN[13:0]	I	**Northbound Input Data:** High speed serial signal. Read path from the previous AMB toward this AMB on secondary side of the DIMM connector.
SN[13:0]	I	Northbound Input Data Complement
PS[9:0]	I	**Southbound Input Data:** High speed serial signal. Write path from host toward AMB on primary side of the DIMM connector.
PS[9:0]	I	Southbound Input Data Complement
SS[9:0]	O	**Southbound Output Data:** High speed serial signal. Write path from this AMB toward next AMB on secondary side of the DIMM connector. These output buffers are disabled for the last AMB on the channel.
SS[9:0]	O	Southbound Output Data Complement
FBDRES	A	External precision resistor connected to VCC. On-die termination calibrated against this resistor.
DRAM Interface		
CB[7:0]	I/O	Check bits
DQ[63:0]	I/O	Data
DQS[17:0]	I/O	**Data Strobe:** DDR2 data and check-bit strobe.
DQS[17:0]	I/O	**Data Strobe Complement:** DDR2 data and check-bit strobe complements.
A0A-A15A, A0B-A15B	O	**Address:** Used for providing multiplexed row and column address to SDRAM.

Table 9.2 — Pin Description (Sheet 2 of 3)

Signal	Type	Description
BA0A-BA2A, BA0B-BA2B	O	**Bank Active:** Used to select the bank within a rank.
$\overline{RAS}$A, $\overline{RAS}$B	O	**Row Address Strobe:** Used with $\overline{CS}$, $\overline{CAS}$, and $\overline{WE}$ to specify the SDRAM command.
$\overline{CAS}$A, $\overline{CAS}$B	O	**Column Address Strobe:** Used with $\overline{CS}$, $\overline{RAS}$, and $\overline{WE}$ to specify the SDRAM command.
$\overline{WE}$A, $\overline{WE}$B	O	**Write Enable:** Used with $\overline{CS}$, $\overline{CAS}$, and $\overline{RAS}$ to specify the SDRAM command.
$\overline{CS}$0A-$\overline{CS}$1A, $\overline{CS}$0B-$\overline{CS}$1B	O	**Chip Select:** Used with $\overline{CAS}$, $\overline{RAS}$, and $\overline{WE}$ to specify the SDRAM command. These signals are used for selecting one of two SDRAM ranks. $\overline{CS}$0 is used to select the first rank and $\overline{CS}$1 is used to select the second rank.
CKE0A-CKE1A, CKE0B-CKE1B	O	**Clock Enable:** DIMM command register enable.
ODT0A, ODT0B	O	**DIMM On-Die-Termination:** Dynamic ODT enables for each DIMM on the channel.
CLK[3:0]	O	**Clock:** Clocks to DRAMs. CLK0 and CLK1 are always used. CLK2 and CLK3 are optional and may be disabled when not required.
CLK[3:0]	O	**Clock Complement:** Clocks to DRAMs.
DDR Compensation		
DDRC_C14	A	**DDR Compensation Common:** Common return (ground) pin for DDRC_B18 and DDRC_C18
DDRC_B18	A	DDR Compensation Ball Resistor connected to Compensation Common above
DDRC_C18	A	DDR Compensation Ball Resistor connected to Compensation Common above
DDRC_B12	A	DDR Compensation Ball Resistor connected to VSS
DDRC_C12	A	**DDR Compensation Ball** Resistor connected to VDD
Clocking		
SCK	I	**AMB Clock:** This is one of the two differential reference clock inputs to the Phase Locked Loop in the AMB core. Phase Locked Loops in the AMB will shift this to all frequencies required by the core, DDR channels, and FBD Channel.
SCK	I	**AMB Clock Complement:** This is the other differential reference clock input to the Phase Locked Loop in the AMB core. Phase Locked Loops in the AMB will shift this to all frequencies required by the core, DDR channels, and FBD Channel.
PLLTSTO	O	PLL Clock Observability Output: This pin can be used to observe VCO, reference clock, core clock, etc. For system debug and design characterization.
VCCAPLL	A	**VCC:** PLL Analog Voltage for the core PLL
VSSAPLL	A	**VSS:** PLL Analog Voltage for the core PLL
System Management		
SCL	I/O	SMBus Clock
SDA	I/O	SMBus Address/Data
SA[2:0]		DIMM Select ID
Reset		

Table 9.2 — Pin Description (Sheet 3 of 3)

Signal	Type	Description
$\overline{\text{RESET}}$		Power Good Reset
Miscellaneous Test		
TEST (4 pins)	NC	Pin for debug and test. Must be floated on DIMM.
TESTLO (5 pins)	A	Pin for debug and test. Must be tied to Ground on DIMM
TESTLO_AB20	A	Pin for debug and test. Connected to two resistors. One resistor is connected to VCCFBD, the other resistor is connected to VSS.
TESTLO_AC20	A	Pin for debug and test. Connected to two resistors. One resistor is connected to VCCFBD, the other resistor is connected to VSS.
Power Supplies		
VCC (24 pins)	A	1.5V nominal supply for core IO
VCCFBD (8 pins)	A	1.5V nominal supply for FBD high speed IO
VDD (24 pins)	A	1.8V nominal supply for DDR IO
VSS (156 pins)	A	Ground
VDDSPD	A	3.3V nominal supply for SMB receivers and ESD diodes
Other Pins		
BFUNC	I	**Buffer Function Bit:** When BFUNC = 0, AMB is used as a regular buffer on FB-DIMM. When BFUNC = 1, AMB is used as either a repeater or a buffer for LAI function. On FB-DIMM, BFUNC is tied to Ground
RFU (18 pins)	NC	**Reserved for Future Use.** Must be floated on DIMM. RFU pins denoted by "a" are reserved for forwarded clocks in future AMB implementations.
Other No Connect Pins		
NC (129 pins)	NC	No Connect pins

This Page Intentionally Left Blank

10 Reset

10.1 Introduction

This chapter describes aspects of hardware reset specific to the Advanced Memory Buffer.

10.2 Platform Reset Functionality

The FBD channel provides a RESET# signal to initialize all AMBs on the channel. The generation of this signal is platform dependent, and may be asynchronous to the clock. The platform will assert RESET# at power up. This signal may be asserted at other times, such as a warm boot (i.e., a 3 key reset, or machine restart).

It is possible that platform conditions cause RESET# to be asserted at any time, including in the middle of DRAM commands. This could occur during a warm boot. Under these conditions, the Advanced Memory Buffer will be reset and the contents of memory are not guaranteed. The state of the DRAMs must be guaranteed when reinitialized for proper response (refer to 3.5.1 in Section 3 DDR Interface).

10.2.1 Platform RESET# Requirements

RESET# must be asserted at power up, and may also be asserted at other times such as a warm boot.

- Asserting RESET# only at power up will allow error logging registers to be maintained through a warm boot cycle.
- Asserting RESET# at warm boot will clear all error logging registers.

There is no need to delay or lockout RESET# going to the FBD channel since the AMB will guarantee that the tDelay parameter is met. Reference Clocks must remain stable for at least 4 clock cycles after RESET# is asserted in order to allow the AMB to satisfy the tDelay requirement.

- RESET# must be asserted during power up, and for a minimum of 1mS after the FBD channel power and reference clocks SCK/$\overline{\text{SCK}}$are stable.
- RESET# must be asserted for a minimum of 100uS. This will only apply if RESET# is re-asserted while power and clocks remain stable.
- After initial power on , if the reference clock frequency is changed while RESET# is asserted, RESET# must not be deasserted until power and reference clocks SCK/$\overline{\text{SCK}}$ have been stable for at least 1 ms.

10.2.2 Advanced Memory Buffer RESET# Requirements

RESET# is asynchronously applied to all storage elements. Assertion of RESET# may or may not affect AMB PLL operation (depends on specific AMB PLL design).

Upon assertion of RESET#:

- DRAM CKE is driven low asynchronously with minimal delay (within 1 clock, asynch path from reset to CKE)
- DQ/DQS, and C/A are don’t care.
- DRAM CLK/$\overline{\text{CLK}}$ continue to run with no short pulses generated within the tDelay period specified in JESD79-2A Table 36 (timing diagram in Figure 60).
- DRAM CLK/$\overline{\text{CLK}}$ may be stopped after the tDelay has been satisfied.
- All internal register bits are set to their default values, including any error logging bits that are normally not reset by the channel reset.
- The initialization FSM is put into the disable state. All internal state machines are put in their default state.
- All southbound and northbound Tx outputs are put into electrical idle (EI) mode. All Tx outputs stay in EI mode until they are put into Training State (TS0) after deassertion of RESET#.

10.2.3 Power-Up and Suspend-to-RAM Considerations

In a suspend to RAM environment the DRAMs are put into self-refresh mode, and the FBD channel power may be removed. The DRAM power supply remains active. This supply is used by the AMB DRAM interface I/O circuits. The AMB must keep the CKE pins low, without glitches through this transition.

RESET# must be asserted before channel power goes away when entering S3.

DDR control and clock signals will be pulled low during initial power up. This may be done with a voltage detection circuit. CKE must be maintained low during this time without glitches to prevent the DRAMs from exiting self refresh mode. The RESET# signal will remain low during the power-up sequence, for at least 1mS after power and clocks are stable. The CKE signals must remain low until a command is received that takes the CKE signals high. This could be an exit self refresh command, or any of the DRAM CKE commands.

10.3 Reset Types

Types of reset:

- Hard resets occur when the RESET# signal is low. This usually occurs at power up.
- Fast resets occur when there is a reset event on the primary southbound FBD Link.
- SMBus resets affect only the SMBus interface.

10.4 Pads Controlling Reset

The Advanced Memory Buffer resets are controlled by the RESET# pad and the primary southbound FBD link pads. The RESET# pad resets the chip at power up. When the primary southbound FBD link pads indicate EI, a fast reset is started.

10.4.1 RESET# Pad

The RESET# pad is controlled by the platform until after power and SCK/$\overline{\text{SCK}}$ are stable. RESET# asynchronously resets most of the chip to a safe initial state. As the chip comes out of reset, the Primary South FBD Link is expected to be in a reset state. As the link sequences through the first initialization sequence after power up, the Advanced Memory Buffer will not generate any DRAM commands other than to maintain CKE low and enable DRAM clocks at the appropriate time.

10.4.2 Primary FBD Link

When an EI occurs on the primary southbound FBD link a fast reset is started. This starts a handshake procedure putting the DRAMs into self-refresh mode and resetting the Advanced Memory Buffer. Fast reset does not reset the PLL, and sticky registers.

10.5 Details

10.5.1 Cold Power-Up Reset Sequence

1. 1.5V, 1.8V and 3.3V power supplies comes up

- RESET# asserted low while power supplies are coming up
- CKE's are low upon 1.8V power up

2. BIOS queries SPD on all the FBDs on the channel to determine operating conditions
   — channel frequency, compatible DIMMs, DRAM and AMB parameters
3. Clocks up and stable at required frequency

- Reference Clocks should be stable for at least 1ms before RESET# deasserted
- DRAM clocks (CLK/$\overline{\text{CLK}}$) may be toggling at this time

4. RESET# deasserted high

- CKE's to DRAMs remain low

5. No in-band or SMBus transactions for at least 2 ms after RESET# deasserted
6. AMB parameters critical for robust link initialization are programmed via SMBus

- Architected link registers
  — LINKPARNXT: link frequency - Note: some AMBs may use this write to trigger PLL init
  After writing to LINKPARNXT, 200us is required prior to any in-band activity.
  Note: It is generally satisfied by additional SMBus activity.
  — FBDSBCFGNXT: SB transmitter drive strength, de-emphasis setting and pass-thru mode
  — FBDNBCFGNXT:NB transmitter drive strength, de-emphasis setting and pass-thru mode
- Personality Bytes from SPD needed for link inititalization
  — PERSBYTE[5:0]NXT:
  — remaining Personality bytes are not required for link init and may be loaded over the high speed FBD configuration register accesses
- These "Next" register values must be transferred to the matching "Current" registers before the FBD link leaves the DISABLE state
  — Updates may be done right after the NXT register is updated when link is in electrical idle. Updates must be complete before the beginning of training.

7. FBD Link is initialized including CALIBRATION state.
8. Remaining AMB configuration is loaded over high speed FBD channel

- CMD2DATA, remaining Personality bytes, other SPD parameters, DRAM parameters, Errors enabled, etc.

9. FBD Link goes through fast reset (no CALIBRATION) to establish the desired configuration
   DRAM clocks should be stable at this time (i.e. after link train).
10. DRAM interface can now be established
    a. MRS/EMRS setup using DCALCSR and DCALADDR
    b. DRAM interface calibrated using DCALCSR
    c. Optionally, Membist functionality can be used to test the DRAMs
    d. DRAM's can be initialized using MemBist
    e. AMB auto-refresh engine is enabled at this time.

11. Refresh must now be transfered to the host

- Option 1: Use fast reset on the link with DRAMs in self-refresh
  - clear DSREFTC:DISSREXIT to enable fast self refresh exit when link is re-established
  - put the link in disable state which automatically puts the DRAMs in self refresh.
  - Start the refresh engine on the host
  - bring up the link again
  - Host starts sending refresh commands as soon as L0 state reached
- Option 2: write control register to disable auto-refresh engine followed by
  - Clear DAREFTC:AREFEN to turn off auto-refresh
  - Host then immediately takes over sending refresh commands

12. Host now has complete control of the FBD Channel

10.6 Timing Diagrams

Timing diagrams will be released in a future revision of this document.

10.7 I/O Initialization

10.7.1 FBD Channel Initialization

Channel initialization states and uses of fast reset are described in the *FB-DIMM Architecture and Protocol Specification*.

11 Registers

This chapter defines the minimal subset of AMB configuration registers to support this version of the FBD protocol.

11.1 Access Mechanisms

The Advanced Memory Buffer (AMB) component supports PCI configuration space access as defined in the *PCI Local Bus Specification, Rev.2.2*. The internal registers of the AMB can be accessed in byte or double word (32-bit) quantities. All multi-byte numeric fields use “little-endian” ordering (i.e., lower addresses contain the least significant parts of the field). As a memory buffer (not a PCI device or bridge) the AMB is not fully compliant with this mechanism with respect to the standard registers (those with offsets 0-3Fh).

AMB will not be mapped into the host system's PCI Plug and Play hierarchy, but is accessed through a method that is host controller implementation specific.

Problems will occur if the host system maps the registers into the PCI PnP hierarchy.

Configuration accesses are transported on the FBD link as configuration read and write commands, which mimic the corresponding PCI commands.

11.1.1 Conflict Resolution and Usage Model Limitations

AMB accepts configuration register reads and writes through the FBD link and through SMBus transactions. In Logic Analyzer Interface (LAI) mode, registers are not accessible through the in-band FBD link configuration read/write commands.

Registers do not incur read side-effects.

11.1.2 FBD Data on Configuration Read Returns

FBD read return data from AMB is described in the *FB-DIMM Draft Specification: Architecture and Protocol*. Configuration reads are sent in northbound data frames. Only the bottom four bytes of this data are defined for a configuration access. The rest of the bytes in the read return are undefined. Legal CRCs are generated for these undefined inbound bytes.

11.1.3 Non-Existent Register Bits

To comply with the PCI specification, accesses to non-existent registers and bits will be treated as follows:

Table 11.1 — Access to “Non-existent” Register Bits

Access to	Writes	Reads
Registers in unimplemented functions	Have no effect	AMB returns -1
Registers not listed	Have no effect	AMB returns all zeroes
Reserved bits in registers	Software must read-modify-write to preserve the value	AMB returns implementation specific values

11.1.4 Register Attribute Definition

Table 11.2 — Register Attributes Definitions

Attribute	Abbreviation	Description
Read Only	RO	The bit is set by the hardware only and software can only read the bit. Writes to the register have no effect.
Read/ Write	RW	The bit can be read or written by software.
Read/ Write / Clear	RWC	The bit can be either read or cleared by software. In order to clear a bit, the software must write a one to it. Writing a zero to an RWC bit will have no effect. Hardware will set this bit.
Read/ Write /Set	RWS	The bit can be either read or set by software. In order to set this RWS bit, the software must write a one to it. Writing a zero to an RWS bit will have no effect. Hardware will clear this bit.
Sticky	All of the above with "ST" appended to the end	The bit is "sticky" or unchanged by a link reset. These bits can only be defaulted by a power-up reset.
Reserved	RV	This bit is reserved for future expansion and must not be written. The *PCI Local Bus Specification*, Revision 2.2 requires that reserved bits must be preserved. Any software that modifies a register that contains a reserved bit is responsible for reading the register, modifying the desired bits, and writing back the result.

11.1.5 Binary Number Notation

When references are made to binary numbers, the following notation is used:

n'bXX

n - number of digits

b - indicates binary

XX - binary value

For example, 2'b01 is two binary digital of value "01".

11.1.6 Function Mapping

The following functions are described in this chapter:

0) PCI Standard Header Identification Registers
1) FBD Link Registers
2) Implementation Specific FBD Registers
3) DDR and Miscellaneous Registers
4) Implementation Specific DDR Initialization and Calibration Registers
5) DFX Registers
6)IBIST, Bring-up and Debug Registers
7) Implementation Specific

Table 11.3 — Function Mapping Legend

Fill	Description
RegName	Required Architected Register"RegName" in these bytes
Reserved	Reserved Register for future architecture in these bytes
RegName	Optional Architected Register"RegName" in these bytes • No Implementation Specific Registers usage recommended
	Unused Register location available for Implementation Specific use

Table 11.4 — Function 0: PCI Standard Header Identification Registers

DID	VID		00h		80h
			04h		84h
CCR		RID	08h		88h
HDR			0Ch		8Ch
			10h		90h
			14h		94h
			18h		98h
			1Ch		9Ch
			20h		A0h
			24h		A4h
			28h		A8h
RESERVED			2Ch		ACh
			30h		B0h
			34h		B4h
			38h		B8h
			3Ch		BCh
			40h		C0h
			44h		C4h
			48h		C8h
			4Ch		CCh
			50h		D0h
			54h		D4h
			58h		D8h
			5Ch		DCh
			60h		E0h
			64h		E4h
			68h		E8h
			6Ch		ECh
			70h		F0h
			74h		F4h
			78h		F8h
			7Ch		FCh

Table 11.5 — Function 1: FBD Link Registers

RESERVED				00h	RESERVED				80h
RESERVED				04h	RESERVED				84h
RESERVED				08h	RESERVED			CBC	88h
RESERVED				0Ch	**EMASK**				8Ch
				10h	**FERR**				90h
				14h	**NERR**				94h
				18h	RESERVED		RECCFG		98h
				1Ch	RECFBD1		RECFBD0		9Ch
				20h	RECFBD3		RECFBD2		A0h
				24h	RECFBD5		RECFBD4		A4h
				28h	RECFBD7		RECFBD6		A8h
				2Ch	RECFBD9		RECFBD8		ACh
				30h	PERSBYTE3 NXT	PERSBYTE 2NXT	PERSBYTE 1NXT	PERSBYTE 0NXT	B0h
				34h	PERSBYTE7 NXT	PERSBYTE 6NXT	PERSBYTE 5NXT	PERSBYTE 4NXT	B4h
				38h	PERSBYTE1 1NXT	PERSBYTE 10NXT	PERSBYTE 9NXT	PERSBYTE 8NXT	B8h
				3Ch	RESERVED		PERSBYTE 13NXT	PERSBYTE 12NXT	BCh
FBDS3	FBDS2	FBDS1	FBDS0	40h	PERSBYTE3 CUR	PERSBYTE 2CUR	PERSBYTE 1CUR	PERSBYTE 0CUR	C0h
RESERVED				44h	PERSBYTE7 CUR	PERSBYTE 6CUR	PERSBYTE 5CUR	PERSBYTE 4CUR	C4h
RESERVED				48h	PERSBYTE1 1CUR	PERSBYTE 10CUR	PERSBYTE 9CUR	PERSBYTE 8CUR	C8h
RESERVED				4Ch	RESERVED		PERSBYTE 13CUR	PERSBYTE 12CUR	CCh
LINKPARCUR		FBDNBCFG CUR	FBDSBCFG CUR	50h					D0h
LINKPARNXT		FBDNBCFG NXT	FBDSBCFG NXT	54h					D4h
FBDNBCFG NXT (TMT)	FBDSBCFG NXT (TMT)	RESERVED		58h					D8h
RESERVED			MODES	5Ch					DCh
FEATURES				60h					E0h
FBDLIS				64h					E4h
RESERVED		FBDLOCKTO		68h	C2DINCRCU R	C2DINCRN XT	CMD2DAT ACUR	CMD2DAT ANXT	E8h
			FBDHAC	6Ch	RESERVED		C2DDECRC UR	C2DDECR NXT	ECh
			RECALDU R	70h					F0h
			L0SDUR	74h					F4h
			SYNCTRAI NINT	78h					F8h
NBCALSTATUS		SBCALSTATUS		7Ch					FCh

Table 11.6 — Function 2: Implementation Specific FBD Registers

RESERVED	00h		80h
RESERVED	04h		84h
RESERVED	08h		88h
RESERVED	0Ch		8Ch
	10h		90h
	14h		94h
	18h		98h
	1Ch		9Ch
	20h		A0h
	24h		A4h
	28h		A8h
	2Ch		ACh
	30h		B0h
	34h		B4h
	38h		B8h
	3Ch		BCh
	40h		C0h
	44h		C4h
	48h		C8h
	4Ch		CCh
	50h		D0h
	54h		D4h
	58h		D8h
	5Ch		DCh
	60h		E0h
	64h		E4h
	68h		E8h
	6Ch		ECh
	70h		F0h
	74h		F4h
	78h		F8h
	7Ch		FCh

Table 11.7 — Function 3: DDR and Miscellaneous Registers

RESERVED		00h	UPDATED	TEMPHI	TEMPMID	TEMPLO	80h
RESERVED		04h			TEMP	TEMPSTAT	84h
RESERVED		08h					88h
RESERVED		0Ch					8Ch
		10h					90h
		14h					94h
		18h					98h
		1Ch	**MB_START_ADDR**				9Ch
		20h	**MB_END_ADDR**				A0h
		24h	**MB_LFSR**				A4h
		28h	**MBFADDRPTR**				A8h
		2Ch	RESERVED				ACh
		30h	**MB_ERR_DATA00**				B0h
		34h	**MB_ERR_DATA01**				B4h
		38h	**MB_ERR_DATA02**				B8h
		3Ch	**MB_ERR_DATA03**				BCh
MBCSR		40h			MB_ERR_DATA04		C0h
MBADDR		44h					C4h
MBDATA0		48h					C8h
MBDATA1		4Ch					CCh
MBDATA2		50h					D0h
MBDATA3		54h					D4h
MBDATA4		58h					D8h
MBDATA5		5Ch					DCh
MBDATA6		60h					E0h
MBDATA7		64h					E4h
MBDATA8		68h					E8h
MBDATA9		6Ch					ECh
DAREFTC		70h					F0h
MTR	DSREFTC	74h					F4h
DRT		78h					F8h
DRC		7Ch					FCh

Table 11.8 — Function 4: Implementation Specific DDR Initialization and Calibration Registers

RESERVED				00h							80h
RESERVED				04h							84h
RESERVED				08h							88h
RESERVED				0Ch							8Ch
				10h							90h
				14h							94h
				18h							98h
				1Ch							9Ch
				20h							A0h
				24h	S3RESTORE0						A4h
				28h	S3RESTORE1						A8h
				2Ch	S3RESTORE2						ACh
				30h	S3RESTORE3						B0h
				34h	S3RESTORE4						B4h
				38h	S3RESTORE5						B8h
				3Ch	S3RESTORE6						BCh
DCALCSR				40h	S3RESTORE7						C0h
DCALADDR				44h	S3RESTORE8						C4h
				48h	S3RESTORE9						C8h
				4Ch	S3RESTORE10						CCh
				50h	S3RESTORE11						D0h
				54h	S3RESTORE12						D4h
				58h	S3RESTORE13						D8h
				5Ch	S3RESTORE14						DCh
				60h	S3RESTORE15						E0h
				64h							E4h
				68h							E8h
				6Ch							ECh
				70h							F0h
				74h							F4h
				78h							F8h
				7Ch						DDR2ODTC	FCh

Table 11.9 — Function 5: DFX Registers

RESERVED		00h		TRANSCTRL	80h
RESERVED		04h			84h
RESERVED		08h			88h
RESERVED		0Ch			8Ch
		10h			90h
		14h			94h
		18h			98h
		1Ch			9Ch
		20h			A0h
		24h			A4h
		28h			A8h
		2Ch			ACh
		30h			B0h
		34h			B4h
		38h	LAI		B8h
TRANSCFG		3Ch	**SBMA**TCH**U**		BCh
TRANDERR1	TRANDERR0	40h	**SBMA**TCH**L0**		C0h
TRANDERR3	TRANDERR2	44h	SBMATCHL1		C4h
TRANDERR5	TRANDERR4	48h	SBMATCHL2		C8h
TRANDERR7	TRANDERR6	4Ch	**SBMASKU**		CCh
	TRANDERR8	50h	**SBMA**SKL0		D0h
		54h	SBMASKL1		D4h
		58h	SBMASKL2		D8h
		5Ch		MMEVENTSEL	DCh
		60h	**EVENTSEL0**		E0h
		64h	EVENTSEL1		E4h
		68h	EVENTSEL2		E8h
		6Ch			ECh
		70h	EVENT		F0h
		74h	EVBUS		F4h
		78h			F8h
		7Ch	STUCKL	EICNTL	FCh

Table 11.10 — Function 6: IBIST, Bring-up and Debug Registers

RESERVED	00h	**SBFIBPORTCTL**	80h
RESERVED	04h	**SBFIBPGCTL**	84h
RESERVED	08h	**SBFIBPATTBUF1**	88h
RESERVED	0Ch	**SBFIBTXMSK**	8Ch
	10h	**SBFIBRXMSK**	90h
	14h	**SBFIBTXSHFT**	94h
	18h	**SBFIBRXSHFT**	98h
	1Ch	**SBFIBRXLNERR**	9Ch
	20h	**SBFIBPATTBUF2**	A0h
	24h	SBFIBPATTBUF2EN	A4h
	28h		A8h
	2Ch		ACh
	30h	SBFIBINIT	B0h
	34h	SBIBISTMISC	B4h
	38h		B8h
	3Ch		BCh
	40h	**NBFIBPORTCTL**	C0h
	44h	**NBFIBPGCTL**	C4h
	48h	**NBFIBPATTBUF1**	C8h
	4Ch	**NBFIBTXMSK**	CCh
	50h	**NBFIBRXMSK**	D0h
	54h	**NBFIBTXSHFT**	D4h
	58h	**NBFIBRXSHFT**	D8h
	5Ch	**NBFIBRXLNERR**	DCh
	60h	**NBFIBPATTBUF2**	E0h
	64h	NBFIBPATTBUF2EN	E4h
	68h		E8h
	6Ch		ECh
	70h	NBFIBINIT	F0h
	74h	NBIBISTMISC	F4h
	78h		F8h
	7Ch		FCh

Table 11.11 — Functions 7: FBD DFX/Defeature Registers

RESERVED	00h		80h
RESERVED	04h		84h
RESERVED	08h		88h
RESERVED	0Ch		8Ch
	10h		90h
	14h		94h
	18h		98h
	1Ch		9Ch
	20h		A0h
	24h		A4h
	28h		A8h
	2Ch		ACh
	30h		B0h
	34h		B4h
	38h		B8h
	3Ch		BCh
	40h		C0h
	44h		C4h
	48h		C8h
	4Ch		CCh
	50h		D0h
	54h		D4h
	58h		D8h
	5Ch		DCh
	60h		E0h
	64h		E4h
	68h		E8h
	6Ch		ECh
	70h		F0h
	74h		F4h
	78h		F8h
	7Ch		FCh

11.2 PCI Standard Header Identification Registers (Function 0)

11.2.1 VID: Vendor Identification Register

This register identifies the manufacturer of the AMB.

Function: 0 **Offset:00h**			
Bit	**Attr**	**Default**	**Description**
15:0	RO	VID	**Vendor Identification Number** Manufacturer's PCI ID number

11.2.2 DID: Device Identification Register

These registers combined with the vendor identification register uniquely identifies the AMB Devices.

Function: 0 **Offset:02h**			
Bit	**Attr**	**Default**	**Description**
15:0	RO	DID	**Device Identification Number** Identifies each function of the AMB

11.2.3 RID: Revision Identification Register

This register contains the revision number of the AMB.

Function:0 **Offset:08h**			
Bit	**Attr**	**Default**	**Description**
7:0	RO	RID	**Revision Identification Number**: RID Identifies this revision of AMB

11.2.4 CCR: Class Code Register

This register contains the Class Code for the AMB, specifying the device function.

Function: 0 **Offset:09h**			
Bit	**Attr**	**Default**	**Description**
23:16	RO	05h	**Base Class**. This field indicates the general device category. For the AMB, this field is hardwired to 05h, indicating it is a "memory controller".
15:8	RO	00h	Sub-Class. This field qualifies the Base Class, providing a more detailed specification of the device function. For the AMB, this field is hardwired to 00h, indicating it is a "RAM".
7:0	RO	00h	Register-Level Programming Interface. This field identifies a specific programming interface (if any), that device independent software can use to interact with the device. There are no such interfaces defined for "memory controllers".

11.2.5 HDR: Header Type Register

This register identifies the header layout of the configuration space.

Function: 0 **Offset:0Eh**			
Bit	**Attr**	**Default**	**Description**
7	RO	1	Multi-function Device. Selects whether this is a multi-function device, that may have alternative configuration layouts. The AMB has more than the 256 bytes of configuration registers allotted to a single function. Therefore, the AMB is defined to be a multifunction device, and this bit is hardwired to 1.
6:0	RO	00h	Configuration Layout. This field identifies the format of the 10h through 3Fh space. The AMB uses header type “00”: these bits are hardwired to 00h.

11.3 FBD Link Registers (Function 1)

11.3.1 FBD Link Control and Status

11.3.1.1 FBDS0: FBD Status 0

This register contains copies of status bits returned by the AMB in the most recent northbound status frame when SYNC command R[1:0] field is 2’b00.

In the absence of SYNCs to this register, this register is not updated.

Function:1 **Offset:40h**			
Bit	**Attr**	**Default**	**Description**
7:5	RV	0h	Reserved
4	RO	0h	SP: Parity: This bit contains an odd parity bit that covers the S[3:0] field.
3	RO	0h	**S3: Northbound Debug Event** (1 = asserted, 0 = inactive): This bit is used to communicate debug events to the host.
2:1	RO	0h	**S[2:1]: Thermal Trip:** This field indicates various thermal conditions of the AMB as follows: • 00 – Below TEMPLO • 01 – Above TEMPLO • 10 – Above TEMPMID and falling • 11 – Above TEMPMID and rising The TEMPLO threshold is generally used to inform the host to accelerate refresh events. The TEMPMID threshold is generally used to inform the host that a thermal limit has been exceeded and that thermal throttling is needed. Refer to the RAS chapter for more details on thermal management.
0	RO	0h	S0: ERROR Asserted: This bit indicates an error has been detected by the AMB. Errors can be alert or other type.

11.3.1.2 FBDS1: FBD Status 1

This register contains copies of status bits returned by the AMB in the most recent northbound status frame when SYNC command R[1:0] field is 2'b01.

Function:1 **Offset:41h**			
Bit	**Attr**	**Default**	**Description**
7:5	RV	0h	Reserved
4	RO	0h	SP: Parity: This bit contains an odd parity bit that covers the S[3:0] field.
3:1	RV	0h	Reserved
0	RO	0h	S0: Data Merge Error: This bit indicates that the northbound data merge alignment logic of an intermediate AMB cannot met the timing required to merge its DRAM data into the northbound data stream when required. Refer to the initialization chapter for details.

11.3.1.3 FBDS2: FBD Status 2

This register contains copies of status bits returned by the AMB in the most recent northbound status frame when SYNC command R[1:0] field is 2'b10

Function:1 **Offset:42h**			
Bit	**Attr**	**Default**	**Description**
7:5	RV	0h	Reserved
4	RO	0h	SP: Parity: This bit contains an odd parity bit that covers the S[3:0] field.
3:0	RV	0h	Reserved

11.3.1.4 FBDS3: FBD Status 3

This register contains copies of bits that were returned by the AMB in the most recent northbound status frame when the SYNC command R[1:0] field is 2'b11. This can also be written with an override value that will be returned if selected during SYNC command.

Function:1 **Offset:43h**			
Bit	**Attr**	**Default**	**Description**
7:6	RV	0h	Reserved
5	RW	0h	OVREN: Use values written by user. Setting this bit causes the values specified in the lower 5 bits of this register returned as-is if requested by SYNC command.
4	RW	1h	USRPAR: User Specified parity for USRVAL
3:0	RW	0h	USRVAL: User Specified value

11.3.1.5 MODES: Operating Mode

This register contains overview configuration status of chip.

Function:1 **Offset:5Ch**			
Bit	**Attr**	**Default**	**Description**
7	RO	1	NORMAL: • 1 = Normal AMB Buffer
6	RO	0	LAI: • 1 = LAI
5	RO	0	REPEATER: • 1 = Repeater
4	RO	0	TRANSPARENT: • 1 = Transparent Test Mode
3:0	RV	0	Reserved

11.3.1.6 FEATURES: Capabilities

This register reports optional capabilities of this DIMM.

Function:1 **Offset:60h**			
Bit	**Attr**	**Default**	**Description**
31:15	RV	0h	Reserved
14:11	RO	Vendor Specific	DDRFREQ: DDR2 frequencies supported • 1XXX = reserved • X1XX = DDR2-800 • XX1X = DDR2-667 • XXX1 = DDR2-533
10	RO	Vendor Specific	VARLAT: Variable Read Latency Mode • 1 = Support Variable Read Latency on data returns • 0 = Not supported
9	RO	Vendor Specific	LAI: Logic Analyzer Interface Mode • 1 = Support remapping DDR interface as Logic Analyzer Interface • 0 = Not supported
8	RO	Vendor Specific	DMASK: Data Mask for non-ECC Write Data • 1 = Support data mask with non-ECC Write • 0 = Not supported
7	RO	Vendor Specific	L0S: Low Power Link State • 1 = Support L0s state • 0 = Not supported
6:2	RO	Vendor Specific	NBWC: Northbound Width Capability • 1XXXX = 14 bits NB width supported • X1XXX = 14bits fail over to 13 bits mode supported. • XX1XX = 13 bits NB width supported • XXX1X = 13 bits fail over to 12 bits mode supported. •
1:0	RO	Vendor Specific	SBWC: Southbound Width Capability • X1 = 10 SB bits: Device supports 10-bits and 10-bit fail-over to 9-bits. Both configurations deliver 72-bits of data payload frame. 1X = Reserved

11.3.1.7 FBDLIS: FBD Link Initialization Status

This register reports GB AMB FBD initialization status and is only valid when the link is up since it is not sticky.

Function:1 **Offset:64h**			
Bit	**Attr**	**Default**	**Description**
31:20	RV	0	Reserved
19	RO	0	DATAMERGEERROR: NorthBound Data Merge Error • 1 = NB merge error
18	ROST	0	**NBMERGEDIS: NorthBound Merge Disable** Set by TS2 packet addressed to it • 1 = Disable NB merge • Note: state in AMB should be sticky through fast link reset until new TS2 resets bit or hard pin reset
17:12	RO	3Fh	NBWCFG: Northbound width configuration set by TS3 • See table in *FBD Channel Specification* for full decoding • [5:4] = Selects 14, 13 or 12 lane operation. • [3:0] - Selects none or one lane to map out
11:8	RO	Fh	SBWCFG: Southbound width capability set by TS3 • See Table in *FBD Channel Specification* for full decoding • [3:0] - Selects none or one lane to map out
7	RV	0	Reserved
6	RO	0	**TS2RESP:** Responded to a TS2 packet addressed to it 1: TS2 was addressed to this AMB • In polling mode - DS matches TS2 AMB_ID value • Undefined in other states
5	RO	0	SB2NBLBMAP: Specifies if upper or lower SB lanes are reflected in TS1 Valid only during testing phase (TS1) 1 = upper SB bit lanes 0 = lower SB lanes
4	RO	0	LASTAMBFLAG: Indicates if this AMB is acting like the last AMB • In Disable, Calibrate - always 0. • In training - Set if DS matches TS0 AMB_ID value • Retains value after training till next reset.
3:0	RO	0h	**LINITST: Link initialization state** Encoding is • 0000 - Disable • 0001 - Calibrate • 0010 - Training • 0011 - Testing • 0100 - Polling • 0101 - Config • 0110 - L0 • 0111 - L0s • 1000 - Recalibrate

11.3.1.8 FBDSBCFGNXT: FBD SB Link Electrical Configuration

This register contains next settings of control bits to set link electrical parameters to match link length and frequency characteristics.

Note: The Margin Drive Strength settings are not to be used during normal function mode, and therefore do not have a corresponding CUR register. New margin settings only take effect after the channel comes out of fast reset (channel Electrical Idle). Transmitters are not required to dynamically adjust drive strengths on the fly. Desired voltage margin settings are loaded into FBDSBCFGNXT, function 1, offsets 54h when SBTXDRVMAR is HIGH, and SB transmitters will be driven accordingly.

Function:1 **Offset:54h**			
Bit	**Attr**	**Default**	**Description**
7:6	RV	0h	Reserved
5	RWST	0h	**SBTXDRVMAR: SB TRANSMIT MARGIN** '1' = margin drive strength '0' (default) = no change to normal drive strength
4:3	RWST	00b	**SBTXDRVCUR: SB TRANSMIT DRIVE STRENGTH** Normal drive strengths: (SBTXDRVMAR == 0) ‘11’ = Small ‘10’ = reserved ‘01’ = Regular ‘00’ = Large **SBTXDRVCUR:** Margin test drive strengths: (SBTXDRVMAR == 1) ‘11’ = 160 mv minimum ‘10’ = 250 mv minimum ‘01’ = 340 mv minimum ‘00’ = 430 mv minimum
2:1	RWST	10b	**SBTXDEEMP:** 00 = 0 dB 01 = 3.5dB 10 = 6dB 11 = 9.5dB
0	RWST	1b	**SBRESYNCEN:** ‘1’ = SB pass-thru data is in Re-sync mode ‘0’ = SB pass-thru is in Re-sample mode.

Optional feature "Timing Margin Test"

Receivers are not required to dynamically adjust error offset on the fly. New margin settings only take effect after the channel comes out of fast reset. Receivers are not required to dynamically adjust timing margin on the fly. Desired timing margin settings are loaded into FBDSBCFGNXT and FBDNBCFGNXT, function 1, offsets 5Ah and 5Bh. Refer to FB-DIMM Design for Test, Design for Validation (DFx) Specification v1.0 section 7.3 for details.

Function:1 **Offset:5Ah**			
Bit	**Attr**	**Default**	**Description**
7	RWST	0h	**SBRXMARPOL: SOUTHBOUND RECEIVER TIMING MARGIN POLARITY** Sets the southbound receiver margin error polarity 0 = early 1 = late
6:0	RWST	0h	**SBRXMAROFF: SOUTHBOUND RECEIVER TIMING MARGIN OFFSET** This field sets the magnitude of the timing sampling error applied to the SB receiver. A minimum implementation requires 6:4 to be implemented. Specific implementations may choose to implement additional error offset granularity using some or all of bits 3:0. '1111111' = full error '0000000' = zero error all other values will provide binary monotonic error insertion between zero and full sampling error

11.3.1.9 FBDNBCFGNXT: FBD NB Link Electrical Configuration

This register contains next settings of control bits to set link electrical parameters to match link length and frequency characteristics.

Note: The Margin Drive Strength settings are not to be used during normal function mode, and therefore do not have a corresponding CUR register. New margin settings only take effect after the channel comes out of fast reset (channel Electrical Idle). Transmitters are not required to dynamically adjust drive strengths on the fly. Desired voltage margin settings are loaded into FBDNBCFGNXT, function 1, offsets 55h when NBTXDRVMAR is HIGH, and NB transmitters will be driven accordingly

Function:1 **Offset:55h**			
Bit	**Attr**	**Default**	**Description**
7:6	RV	0h	Reserved
5	RWST	0h	**NBTXDRVMAR: NB TRANSMIT MARGIN** '1' = margin drive strength '0' (default) = no change to normal drive strength
4:3	RWST	00b	**NBTXDRVCUR: NB TRANSMIT DRIVE STRENGTH** Normal drive strengths: (NBTXDRVMAR == 0) ‘11’ = Small ‘10’ = reserved ‘01’ = Regular ‘00’ = Large **NBTXDRVCUR:** Margin test drive strengths: (NBTXDRVMAR == 1) ‘11’ = 160 mv minimum ‘10’ = 250 mv minimum ‘01’ = 340 mv minimum ‘00’ = 430 mv minimum
2:1	RWST	10b	**NBTXDEEMP:** 00 = 0 dB 01 = 3.5dB 10 = 6dB 11 = 9.5dB
0	RWST	1b	**NBRESYNCEN:** ‘1’ = NB pass-thru data is in Re-sync mode ‘0’ = NB pass-thru is in Re-sample mode.

Optional feature "Timing Margin Test"

Receivers are not required to dynamically adjust error offset on the fly. New margin settings only take effect after the channel comes out of fast reset. Receivers are not required to dynamically adjust timing margin on the fly. Desired timing margin settings are loaded into FBDSBCFGNXT and FBDNBCFGNXT, function 1, offsets 5Ah and 5Bh. Refer to FB-DIMM Design for Test, Design for Validation (DFx) Specification v1.0 section 7.3 for details.

Function:1 **Offset:5Bh**			
Bit	**Attr**	**Default**	**Description**
7	RWST	0h	**NBRXMARPOL: NORTHBOUND RECEIVER TIMING MARGIN POLARITY** Sets the northbound receiver margin error polarity 0 = early 1 = late
6:0	RWST	0h	**NBRXMAROFF: NORTHBOUND RECEIVER TIMING MARGIN OFFSET** This field sets the magnitude of the timing sampling error applied to the NB receiver. A minimum implementation requires 6:4 to be implemented. Specific implementations may choose to implement additional error offset granularity using some or all of bits 3:0. '1111111' = full error '0000000' = zero error all other values will provide binary monotonic error insertion between zero and full sampling error

11.3.1.10 LINKPARNXT: FBD Link Frequency

This register contains current settings of control bits to set link electrical parameters to match link length and frequency characteristics.

Function:1 **Offset:56h**			
Bit	**Attr**	**Default**	**Description**
15:2	RV	0h	Reserved
1:0	RWST	00b¡@¡@	CFREQ: Current Link Frequency • 11 = DDR2-800 • 10 = DDR2-667 • 01 = DDR2-533 • 00 = Uninitialized

11.3.1.11 FBDSBCFGCUR: FBD SB Link Electrical Configuration

This register contains current settings of control bits to set link electrical parameters to match link length and frequency characteristics.

Function:1 **Offset:50h**			
Bit	**Attr**	**Default**	**Description**
7:5	RV	0h	Reserved
4:3	ROST	00b	**SBTXDRVCUR:** ‘11’ = Small ‘10’ = reserved ‘01’ = Regular ‘00’ = Large
2:1	ROST	10b	**SBTXDEEMP:** 00 = 0 dB 01 = 3.5dB 10 = 6dB 11 = 9.5dB
0	ROST	1	**SBRESYNCEN:** ‘1’ = SB pass-thru data is in Re-sync mode ‘0’ = SB pass-thru is in Re-sample mode.

11.3.1.12 FBDNBCFGCUR: FBD NB Link Electrical Configuration

This register contains current settings of control bits to set link electrical parameters to match link length and frequency characteristics.

Function:1 **Offset:51h**			
Bit	**Attr**	**Default**	**Description**
7:5	RV	0h	Reserved
4:3	ROST	00	**NBTXDRVCUR:** ‘11’ = Small ‘10’ = reserved ‘01’ = Regular ‘00’ = Large
2:1	ROST	10b	**NBTXDEEMP:** 00 = 0 dB 01 = 3.5dB 10 = 6dB 11 = 9.5dB
0	ROST	1	**NBRESYNCEN:** ‘1’ = NB pass-thru data is in Re-sync mode ‘0’ = NB pass-thru is in Re-sample mode.

11.3.1.13 LINKPARCUR: FBD Link Frequency

This register contains current settings of control bits to set link electrical parameters to match link length and frequency characteristics

Function:1 **Offset:52h**			
Bit	**Attr**	**Default**	**Description**
15:2	RV	0h	Reserved
1:0	ROST	01	CFREQ: Current Link Frequency • 11 = DDR2-800 • 10 = DDR2-667 • 01 = DDR2-533 • 00 = Reserved

11.3.1.14 FBDLOCKTO: FBD Bit Lock Time Out Register

This register contains .

Function:1 **Offset:68h**			
Bit	**Attr**	**Default**	**Description**
15:2	RWST	0594h	BLTOCNT: Bit Lock Time Out Counter default:: 1428 frames
1:0	RWST	0h	NBLINKCFG: Norht bound Link Config 00 = 14 lane 01 = 13 lane 10 = 12 lane 11 = reserved

11.3.1.15 FBDHAC: FBD Hot Add Control

This register contains control to aid in hot add functionality.

Function:1 **Offset:6Ch**			
Bit	**Attr**	**Default**	**Description**
7:2	RV	0	Reserved
1	RO	0	NB_DATA_ALL_ONES_FLAG: • 1 = Receiving ones on sufficient NB lanes to support init • 0 = Not receiving calibrate handshake on NB Rx
0	RW	0	DRIVE_ONES_SB: • 1 = Enable SB Tx Outputs and drive one's • 0 = Normal operation

11.3.1.16 RECALDUR: FBD Recalibrate Duration

This register determines the duration of the Recalibration state between 32 and 42 frames. During recalibration state all commands and CRC are ignored.

Function:1 **Offset:70h**			
Bit	**Attr**	**Default**	**Description**
7	RV	0	Reserved
6:1	RW	0h	Recalibrate_Duration: This field sets the duration of the Recalibrate state once a sync command with the ERC bit. set is received. Legal values are between 32 and 42. Functionality if set outside this range is undefined. • > ‘42d (101010b) = undefined • = ‘42d (101010b) = ignore for 42 frames after Sync • .... • = 32d (100000b) = ignore for 32 frames after Sync • <32d (100000b) = undefined
0	RV	0	Reserved

11.3.1.17 L0SDUR: FBD L0S State Duration

This register determines the duration of the L0s state between 32 and 42 frames.

Function:1 **Offset:74h**			
Bit	**Attr**	**Default**	**Description**
7	RV	0	Reserved
6:1	RW	0h	L0s_Duration: This field sets the duration of the L0s state once a sync command with the EL0s bit. set is received. Legal values are between 32 and 42. Functionality if set outside this range is undefined. • > ‘42d (101010b) = undefined • = ‘42d (101010b) = ignore for 42 frames after Sync • .... • = 32d (100000b) = ignore for 32 frames after Sync • <32d (100000b) = undefined
0	RW	0b	L0s_Enable: When 1 L0s mode is enabled

11.3.1.18 SYNCTRAININT: SYNC Train Interval register

This register sets the typical spacing of sync commands on the link.

Function:1 **Offset:78h**			
Bit	**Attr**	**Default**	**Description**
7:0	RWST	2Ah	SyncTrainInt: This field sets the min spacing for sync cmds default value 42d (101010b) min value 32, max value=255

11.3.1.19 SBCALSTATUS: Southbound Calibration Status

This register contains the pass/fail information of the last calibration on a per lane basis for the southbound. The AMB is expected to log the information when it is asked to go through calibration. The register is always cleared when entering the calibration state. This register will be used for debug purposes.

Function:1 **Offset:7Ch**			
Bit	**Attr**	**Default**	**Description**
15:10	RV	0h	Reserved
9:0	RWST	0h	CALSTATUS: Calibration status 0 - Pass 1 - Fail **Note**: Read/Write for firmware debug purposes ONLY

11.3.1.20 NBCALSTATUS: Northbound Calibration Status

This register contains the pass/fail information of the last calibration on a per lane basis for the southbound. The AMB is expected to log the information when it is asked to go through calibration. The register is always cleared when entering the calibration state. This register will be used for debug purposes.

Function:1 **Offset:7Eh**			
Bit	**Attr**	**Default**	**Description**
15:14	RV	0h	Reserved
13:0	RWST	0h	CALSTATUS: Calibration status 0 - Pass 1 - Fail **Note**: Read/Write for firmware debug purposes ONLY

11.3.2 Error Registers

11.3.2.1 EMASK: Error Mask

This register masks errors in the FERR and NERR registers as well as disabling some types of error detection. A ‘0’ in any field enables that error. A ‘1’ in any field masks (disables) that error. Multiple bits can be set in this register. An enabled error sets error status, updates error logs, and generates link signals. A masked error does not affect error status, error logs, or link signals.

.

Function:1 **Offset:8Ch**			
Bit	**Attr**	**Defaul t**	**Description**
31:6	RV	0	Reserved
5	RWST	1	INJERR: Error Injection has sourced an injected error bit in the status return field (optional)
4	RWST	1	INJALERT: Error Injection has sourced an injected alert error (optional)
3	RWST	0	FEWEDGES: tClk Training Violation (no sync cmd for 2x SYNCTRAININT - typically 84 frames)
2	RWST	1	OVERTEMP: Temp > TEMPHI and temp enabled
1	RWST	1	UNIMPLCFG: Unimplemented Configuration Address
0	RWST	0	CMDCRCERR: SB CRC Error

11.3.2.2 FERR: First Error

This register contains bits specifying which errors occurred first as related to the FBD channel.

Function:1 **Offset:90h**			
Bit	**Attr**	**Defaul t**	**Description**
31:6	RV	0	Reserved
5	RWCS T	0	INJERR: Error Injection has sourced an injected error bit in the status return field (optional)
4	RWCS T	0	INJALERT: Error Injection has sourced an injected alert error (optional)
3	RWCS T	0	FEWEDGES: tClk Training Violation (no sync cmd for2x SYNCTRAININT - typically 84 frames) Logs in RECFBD registers. Sends Alerts NB. Triggers auto self refresh SM. .
2	RWCS T	0	OVERTEMP: Temp > TEMPHI and temp enabled Fatal. AMB shuts down.

Function:1 **Offset:90h**			
Bit	**Attr**	**Defaul t**	**Description**
1	RWCS T	0	UNIMPLCFG: Unimplemented Configuration Address Correctable. Logs in RECCFG* registers. AMB drops the command.
0	RWCS T	0	CMDCRCERR: SB CRC Error Correctable. Logs in RECFBD registers. AMB drops the current command and sources alerts

11.3.2.3 NERR: Successive Error

This register is used to report successive errors. More than two bits can be set in this register. This register contains bits specifying which errors occurred as related to the FBD channel.

A first error may also cause a successive error to be logged in the NERR.

Function:1 **Offset:94h**			
Bit	**Attr**	**Defaul t**	**Description**
31:6	RV	0	Reserved
5	RWCS T	0	INJERR: Error Injection has sourced an injected error bit in the status return field (optional)
4	RWCS T	0	INJALERT: Error Injection has sourced an injected alert error (optional)
3	RWCS T	0	FEWEDGES: tClkTraining Violation (no sync cmd for 2x SYNCTRAININT - typically 84 frames) Logs in RECFBD registers. Sends Alerts NB. Triggers auto self refresh SM. .
2	RWCS T	0	OVERTEMP: Temp > TEMPHI and temp enabled Fatal. AMB shuts down.
1	RWCS T	0	UNIMPLCFG: Unimplemented Configuration Address Correctable. Logs in RECCFG* registers. Drops the command.
0	RWCS T	0	CMDCRCERR: SB CRC Error Correctable. Logs in RECFBD registers. Drops the current command and sources alerts.

11.3.2.4 RECCFG: Configuration Register Error Log

This register contains the received address for an unimplemented configuration register access error. The contents of this register are only valid when the error that set this register is logged in the FERR or NERR register.

Function:1 **Offset:98h**			
Bit	**Attr**	**Defaul t**	**Description**
15:13	RV	0	Reserved
12:10	RWST	0h	function: **Note**: Read/Write for firmware debug purposes ONLY
9:8	RWST	0h	size: 00 = one byte 01 = two bytes 10 = three bytes 11 = four bytes **Note**: Read/Write for firmware debug purposes ONLY
7:0	RWST	0h	register address: **Note**: Read/Write for firmware debug purposes ONLY

11.3.2.5 RECFBD[9:0]: FBD Error Log

.This register contains FBD frame data received that matches the logged frame error.

Captures {BC} from frame N and A from frame N+1 where

[11:8] = A[n+1]

[7:4] = C[n] slot

[3:0] = B[n] slot

The contents of this register are only valid when one of the errors that set this register is logged in the FERR register. The contents of this register should not change until the error indication is cleared from the FERR register.

Function:1 **Offset:AEh, ACh, AAh, A8h, A6h, A4h, A2h, A0h, 9Eh, 9Ch**			
Bit	**Attr**	**Defaul t**	**Description**
15:12	RV	0	Reserved
11:0	RWST	0	FRMDATA: Frame data for lane n **Note**: Read/Write for firmware debug purposes ONLY

11.3.3 PERSONALITY BYTES loaded from the SPD

These bytes allow for AMB implementation specific settings to be loaded in an architected way by BIOS without BIOS being aware of specific AMB requirements. Each AMB vendor defines how these bytes should be loaded for the specific DIMM being built. The values to be loaded into these bytes are stored in the SPD EEPROM on the DIMM.

The first six bytes are required to be loaded into the AMB via SMBus before link initialization to allow for configuration information needed for robust link operation.

The remaining 8 bytes must be loaded before the FBD begins normal operation.

Usage of these bytes can include

- DDR electrical parameters to optimize performance on a given DIMM
  - e.g. DLL delay settings, various IO driver slew settings,
- Enable/disable of various optimizations that may have been included in the design but can be turned off if they are not needed on this DIMM or they have unanticipated side effects - e.g. power save modes, alternate clock recovery algorithms, ..
- Temperature Sensor offsets
- Internal clock domain phase offsets

11.3.3.1 PERSBYTE[13:0]NXT: Personality Bytes

Function:1 **Offset:BDh:B0h**			
Bit	**Attr**	**Default**	**Description**
7:0	RWST	0	PData: Personality Data Byte Implementation specific registers

11.3.3.2 PERSBYTE[13:0]CUR: Personality Bytes

Function:1 **Offset:BDh:B0h**			
Bit	**Attr**	**Default**	**Description**
7:0	ROST	0	PData: Personality Data Byte Implementation specific registers

11.3.4 Advanced Memory Buffer Hardware Configuration Registers

11.3.4.1 CMD2DATANXT: Next Value of Command to Data Delay

This register has the next value of the command to data delay. This will be used after the next fast reset. Value comes from SPD.

Function:1 **Offset:E8h**			
Bit	**Attr**	**Default**	**Description**
7:4	RWST	0h	**DLYFRMS: Number of frames** This specifies full frame delay part of the command to data delay. 0 - 9: Valid delays 10 - 15: Reserved
3:0	RWST	0h	**DLYFRAC: Fractional delay of command to data** This specifies fractional frame delay part of the command to data delay. 0 - 11: Specifies the delay in 1UI increments 12 - 15: Reserved

11.3.4.2 CMD2DATACUR: Current Value of Command to Data Delay

This register has the current value of the command to data delay.

Function:1 **Offset:E9h**			
Bit	**Attr**	**Default**	**Description**
7:4	ROST	0h	**DLYFRMS: Number of frames** This specifies full frame delay part of the command to data delay. 0 - 9: Valid delays 10 - 15: Reserved
3:0	ROST	0h	**DLYFRAC: Fractional delay of command to data** This specifies fractional frame delay part of the command to data delay. 0 - 11: Specifies the delay in 1UI increments 12 - 15: Reserved

11.3.4.3 C2DINCRNXT: Next Value of Command to Data Delay Increment

This register has the next value of the command to data incremental delay. This will be used after the next fast reset. This will be used by the last AMB to delay driving the data beyond that specified in the command to data delay.

Function:1 **Offset:EAh**			
Bit	**Attr**	**Default**	**Description**
7:2	RV	0h	Reserved
1:0	RWST	0h	**INCRDLY: Incremental Delay for command to data** 0 - 3: Specifies the incremental delay in frames

11.3.4.4 C2DINCRCUR: Current Value of Command to Data Delay Increment

This register has the current value of the command to data incremental delay. This will be used by the last AMB to delay driving the data beyond that specified in

Function:1 **Offset:EBh**			
Bit	**Attr**	**Default**	**Description**
7:2	RV	0h	Reserved
1:0	ROST	0h	**INCRDLY: Incremental Delay for command to data** 0 - 3: Specifies the incremental delay in frames

11.3.4.5 C2DDECRNXT: Next Value of Command to Data Delay Decrement

This register has the next value of the command to data decrement delay. This will be used after the next fast reset. This will only be used by AMBs supporting Variable Read Delay.

Function:1 **Offset:ECh**			
Bit	**Attr**	**Default**	**Description**
7:4	RV	0h	Reserved
3:0	RWST	0h	**DECFRMS: Number of frames** This specifies full frame decrease in the command to data delay of this DIMM. 0- 15: number of frames

11.3.4.6 C2DDECRCUR: Current Value of Command to Data Delay Decrement

This register has the current value of the command to data decrement delay. This is only valid on AMBs supporting Variable Read Delay.

Function:1 Offset:EDh			
Bit	**Attr**	**Default**	**Description**
7:4	RV	0h	Reserved
3:0	ROST	0h	**DECFRMS: Number of frames** This specifies full frame decrease in the command to data delay of this DIMM. 0- 15: number of frames

11.4 Implementation Specific FBD Registers (Function 2)

These registers are implementation specific.

11.5 DDR and Miscellaneous Registers (Function 3)

11.5.1 Memory BIST Registers

11.5.1.1 MBCSR: MemBIST Control

Architected MemBIST control interface.

Function:3 Offset:40h			
Bit	**Attr**	**Default**	**Description**
31	RWS	0	START: Start operation: 1 => Set this bit to begin MemBIST execution. 0 => Hardware will clear this bit when MemBIST execution is completed.
30	RW	0	PF: Fail/Pass indicator: Write to 0 when start MemBIST. Hardware will set to 1 when a failure is detected. 0 => Pass 1 => Fail **Note**: Read/Write for firmware debug purposes ONLY
29	RW	0	HALT: Halt on Error 0 => Operation will not halt due to a detected error. 1 => Operation will halt after read-compare data error is detected. MemBIST will complete the current transaction before halting. This may result in multiple errors being logged.

Function:3 **Offset:40h**			
Bit	**Attr**	**Defaul t**	**Description**
28	RW	0	ABORT: Membist test abort. When test abort bit is set, MBCSR bit 31 (Start operation, RWS) needs to be set to "0" at the same time to avoid restarting MemBIST. 0 => Normal operation. 1 => Need to abort the test during Membist operation. If there is any following membist test after the abort test, bit [28] needs to be cleared. The Write to set MBCSR.abort must occure at least tRFC after the Write to set MBCSR.start. Otherwise subsequent MemBIST operations may fail. tRFC value is set in DAREFTC.trfc (Function3, offset70h, bit field 23:16).
27	RW	0	SPARE:
26:24	RW	000	ALGO: Embedded Algorithm selection: When Embedded algorithm is applied, please program the following bits at the same time. • I/ Select bit[5:4] for the initial command execution mode. Except for the Data Retention stepII for selecting "10: read only with data comparison", program "01: write only without data comparison" for the rest of algorithms. • II/ Program MBCSR bit[11:10] to select FastX, FastY, FastXY • III/Program proper start/end address registers and correspondent MTR value for DIMM type.Do not leave start and end address register as default "00" or the same value. Algorithm did not support single address mode. • IV/ Program MBCSR bit 14 to select failure address logger or failure bits location accumulator. Embedded Algorithm selection: 000 => No embedded algorithm is selected. Normal command will be executed from the selection of MBCSR bits field [5:4] 001 => Scan: ^ (WD1); ^(RD2); ^ (WI3); ^ (RI4) 010 => Undefined 011 => Data Retention Write or Init: ^ (WD1); 100 => Data Retention Read : ^ (RD2); 101 => Mats +: ^(WD1); ^(RD2, WI3); v(RI4, WD5); 110 => March C-: ^(WD1); ^(RD2, WI3); ^(RI4, WD5); v(RD6, WI7); v(RI8, WD9); v(RD10); 111 => Undefined
23:22	RV	00	Reserved

Function:3 **Offset:40h**			
Bit	**Attr**	**Defaul t**	**Description**
21:20	RW	00	CS: CS[1:0] selection in MemBIST mode 01: select Rank 0 10: select Rank 1 00: Reserved 11: Reserved
19	RW	0	INVERT: Invert data pattern when data is written out to DRAM.
18:16	RW	000	FIXED: Fixed data pattern selection for MemBIST operation 000 => 0 001 => F 010 => A 011 => 5 100 => C 101 => 3 110 => 9 111 => 6
15	RW	0	ENABLE288: Enable 288 bits user defined pattern for memory fill write only. There is no data comparison, error logger functions for 288 bits user defined data. 0 => 144 bits user defined data pattern when MBCSR[9:8] selects user defined data. 1 => 288 bits user defined data pattern when MBCSR[9:8] selects user defined data.
14	RW	0	MBDATA: Selects use of MBDATA for error log field for LFSR, Circular Shift and user defined data modes. This field has no effect on fixed data patterns. 0 => use MBDATA0/1/2/3/8 for failure data bit location accumulator. 1 => use MBDATA0/1/2/3/8 to log 5 failure addresses .
13	RW	0	ABAR: MemBIST output address compliment for FastX, FastY, and FastXY. Whenever this bit is enabled, Bank, Row, Column address will be inverted on alternate addresses as described in the MemBIST chapter. 0 => Regular addressing 1 => Dynamic address inversion (see more description in MemBIST Chapt).
12	RW	0	ADIR: Address decode direction for FastX, Fast Y, FastXY 0 => Address increments 1 => Address decrements

Function:3 **Offset:40h**			
Bit	**Attr**	**Defaul t**	**Description**
11:10	RW	00	FAST: Address sequencing 00 => addressing with XZY toggling (column->bank->row) 01 => Fast Y with fixed bank 10 => Fast X with fixed bank 11 => Fast XY with fixed bank
9:8	RW	00	DTYPE: Data type selection: 00 => Fixed data pattern, selected by MBCSR bits 18:16 01 => 144 or 288 bits user defined data 10 => Circular shift data 11 => LFSR data, seeded from 32 bit LFSR seed register. Circular shift data and LFSR data type should not be used for single address operation (ATYPE = 01).
7:6	RW	00	ATYPE: Address type 00 => Reserved 01 => Single physical address operation, contained in MBADDR row/ column/bank. 10 => start/end physical address range defined in MB_START_ADDR & MB_END_ADDR registers. • In FastX, FastY and FastXY modes, only the bank specified in MB_START_ADDR will be exercised. 11 => full address range of the DIMM as defined in MTR register which specifys the number of banks, rows, and columns. • In FastX, FastY and FastXY modes, only the bank 0 will be exercised. Full address test supports XZY addressing (column->bank->row) and fastX/fastY/fastXY .
5:4	RW	00	CMD: Command execution: 00 => Read only without data comparison 01 => Write only without data comparison 10 => Read with data comparison 11 => Write followed by Read with data comparison
3:0	RV	0	Reserved

11.5.1.2 MBADDR: Memory Test Address

The register is used by MemBIST only when testing to a single memory location.

(MBCSR.atype = 2b‘01)

Function:3 **Offset:44h**			
Bit	**Attr**	**Default**	**Description**
31:16	RWST	0000h	ROW: Row Address 15:0
15	RWST	0	SPARE:
14:3	RWST	0000h	COL: Column Address BL8[14:3] <==> DRAM Column Address 15:11,9:3 BL4[14:3] <==> DRAM Column Address 14:11,9:2
2:0	RWST	000	BA: Bank Address 2:0

11.5.1.3 MBDATA[9:0]: Memory Test Data

Function:3 **Offset:6Ch, 68h, 64h, 60h,5Ch, 58h, 54h, 50h,4Ch, 48h**			
Bit	**Attr**	**Default**	**Description**
31:0	RWST	0000h	DATA: see functional description below for definition by mode and register

Table 11.12 — Functional mapping of MemBIST data fields by test mode

			Description by mode (note: MBCSR.dtype, MBCSR.mbdata and MBCSR.enable288 select mode)				
Reg	**Bit**	**Offset**	**Fixed Data Pattern**	**144 bit User Defined Pattern**	**Circular Shift**	**LFSR**	**288 bit User defined pattern**
MBDATA9	31:0	6Ch	5th Fail address	User defined Late data [71:64] & Early data [71:64]	Word4 Circular shift data	LFSR random Late data [71:64] & Early data [71:64]	User defined Late data [71:64] (2nd burst data) & Early data [71:64] (2nd burst data)
MBDATA8	31:0	68h	Late data [71:64] & Early data [71:64] Failure bit location accumulator	5th Fail address Or Late data [71:64] & Early data [71:64] Failure bit location accumulator	5th Fail address Or Late data [71:64] & Early data [71:64] Failure bit location accumulator	5th Fail address Or Late data [71:64] & Early data [71:64] Failure bit location accumulator	User defined Late data [71:64] (1st burst data) & Early data [71:64] (1st burst data)
MBDATA7	31:0	64h	Fail address 4	User defined Late data [63:32]	DW3 Circular shift data	LFSR random Late data [63:32]	User defined Late data [63:32] (2nd burst data)
MBDATA6	31:0	60h	Fail address 3	User defined Late data [31:0]	DW2 Circular shift data	LFSR random Late data [31:0]	User defined Late data [31:0] (2nd burst data)
MBDATA5	31:0	5Ch	Fail address 2	User defined Early data [63:32]	DW1 Circular shift data	LFSR random Early data [63:32]	User defined Early data [63:32] (2nd burst data)
MBDATA4	31:0	58h	Fail address 1	User defined Early data [31:0]	DW0 Circular shift data	LFSR random Early data [31:0]	User defined Early data [31:0] (2nd burst data)
MBDATA3	31:0	54h	Late data [63:32] Failure bit location accumulator	Fail address 4 Or Late data [63:32] Failure bit location accumulator	Fail address 4 Or Late data [63:32] Failure bit location accumulator	Fail address 4 Or Late data [63:32] Failure bit location accumulator	User defined Late data [63:32] (1st burst data)
MBDATA2	31:0	50h	Late data [31:0] Failure bit location accumulator	Fail address 3 Or Late data [31:0] Failure bit location accumulator	Fail address 3 Or Late data [31:0] Failure bit location accumulator	Fail address 3 Or Late data [31:0] Failure bit location accumulator	User defined Late data [31:0]] (1st burst data)
MBDATA1	31:0	4Ch	Early data [63:32] Failure bit location accumulator	Fail address 2 Or Early data [63:32] Failure bit location accumulator	Fail address 2 Or Early data [63:32] Failure bit location accumulator	Fail address 2 Or Early data [63:32] Failure bit location accumulator	User defined Early data [63:32] (1st burst data)
MBDATA0	31:0	48h	Early data [31:0] Failure bit location accumulator	Fail address 1 Or Early data [31:0] Failure bit location accumulator	Fail address 1 Or Early data [31:0] Failure bit location accumulator	Fail address 1 Or Early data [31:0] Failure bit location accumulator	User defined Early data [31:0] (1st burst data)

* In the later half part of data burst length 8 test, 144 bits or 288 bits user-defined data pattern will be repeat as the same sequence of burst length 4.

11.5.1.3.1 MBDATA failure address mapping

To compress the failure address into 32 bits, bits that are always zero are removed from the logging. These removed bits include AutoPrecharge Column address [10] and least significant bits assumed by burst length.

Table 11.13 — MBDATA Failure Address register correspondence to DRAM address

31	30	29	28	27	26	25	24	23	22	21	20	19	18	17	16	15	14	13	12	11	10	9	8	7	6	5	4	3	2	1	0
2	1	0	15	14	13	12	11	10	9	8	7	6	5	4	3	2	1	0	see description below												
Bank			Row																Column and Chunk												

BL4: 1 bit chunk indicates the location of 2 failure burst data chunks.

The above Column plus Chunk is equal to DRAM column address as the following:

Table 11.14 — BL4 Column and Chunk correspondence to DRAM address

Register Bit Location	12	11	10	9	8	7	6	5	4	3	2	1	0	
DRAM Col Address	14	13	12	11	9	8	7	6	5	4	3	2		
Data Chunk													1	X

- where the auto-precharge address bit 10 is assumed zero
- since data is logged in 144 bits (two chunks), address bit zero is not needed

BL8: 2 bit chunk indicates the location of 4 failure burst data chunks.

The above Column plus Chunk is equal to DRAM column address as the following:

Table 11.15 — BL8 Column and Chunk correspondence to DRAM address

Register Bit Location	12	11	10	9	8	7	6	5	4	3	2	1	0	
DRAM Col Address	14	13	12	11	9	8	7	6	5	4	3			
Data Chunk												2	1	X

- where the auto-precharge address bit 10 is assumed zero
- since data is logged in 144 bits (two chunks), Data chunk address bit zero is not needed

11.5.1.4 MB_START_ADDR: Memory Test Start Address

MB_END_ADDR row and column address must be larger than MB_START_ADDR row and column address in either increasing or deceasing address mode.

During FastX, FastY and FastXY operation, only one memory bank will be selected. User should only define the desired bank in MB_START_ADDR[2:0]. MB_END_ADDR[2:0] is ignored.

This register is only used when MBCSR.atype = 2b’10, and when MBCSR.algo is non-zero.

Function:3 **Offset:9Ch**			
Bit	**Attr**	**Defaul t**	**Description**
31:16	RWS T	0000h	ROW: MemBIST Start Row Address 15:0
15	RV	0	Reserved
14:3	RWS T	0000h	COL: MemBIST Start Column Address BL8 [14:3] <==> Column Address 15:11, 9:3 BL4 [14:3] <==> Column Address 14:11, 9:2
2:0	RWS T	000	BA: MemBIST Start Bank Address 2:0

11.5.1.5 MB_END_ADDR: Memory Test End Address

This register is only used when MBCSR.atype = 2b’10, and when MBCSR.algo is non-zero.

Function:3 **Offset:A0h**			
Bit	**Attr**	**Defaul t**	**Description**
31:16	RWS T	0000h	ROW: MemBIST End Row Address 15:0
15	RV	0	Reserved
14:3	RWS T	0000h	COL: MemBIST End Column Address BL8 [14:3] <==> Column Address 15:11, 9:3 BL4 [14:3] <==> Column Address 14:11, 9:2
2:0	RWS T	000	BA: MemBIST End Bank Address 2:0

11.5.1.6 MBLFSRSED: Memory Test Circular Shift and LFSR Seed

Function:3 **Offset:A4h**			
Bit	**Attr**	**Defaul t**	**Description**
31:0	RWS T	0000h	DMBLFSRSED:MemBIST LFSR Seed This 32 bit register will be used as the initial data seed for LFSR or Circular shift data pattern.

11.5.1.7 MBFADDRPTR: Memory Test failure address pointer register

Function:3 **Offset:A8h**			
Bit	**Attr**	**Default**	**Description**
31:0	RWST	0000h	DMBFADDRPTR: This 32 bit register designates which MemBIST failures to log in the available failure address locations. The default value of this register is zero. It means MemBIST always starts logging on the first failure address. If it is programmed to hex A (10 in decimal), MemBIST will log failure addresses starting from the11th failure. The corresponding MB_ERR_DATA0 register will log corrupted data in the first designated failure address. Note: this register does not affect the MBDATA failure bit location accumulators.

11.5.1.8 MB_ERR_DATA00: Memory Test Error Data 0 Bytes [3:0]

Stores the first 32 bits of the 1st 144 bit failure data

Function:3 **Offset:B0h**			
Bit	**Attr**	**Default**	**Description**
31:0	RWST	0000h	DATA: Early failure data [31:0] **Note**: Read/Write for firmware debug purposes ONLY

11.5.1.9 MB_ERR_DATA01: Memory Test Error Data 0 Bytes [7:4]

Stores the second 32 bits of the 1st 144 bit failure data

Function:3 **Offset:B4h**			
Bit	**Attr**	**Default**	**Description**
31:0	RWST	0000h	DATA: Early failure data [63:32] **Note**: Read/Write for firmware debug purposes ONLY

11.5.1.10 MB_ERR_DATA02: Memory Test Error Data 0 Bytes [11:8]

Stores the third 32 bits of the 1st 144 bit failure data

Function:3 **Offset:B8h**			
Bit	**Attr**	**Default**	**Description**
31:0	RWST	0000h	DATA: Late failure data [31:0] **Note**: Read/Write for firmware debug purposes ONLY

11.5.1.11 MB_ERR_DATA03: Memory Test Error Data 0 Bytes [15:12]

Stores the fourth 32 bits of the 1st 144 bit failure data

Function:3 **Offset:BCh**			
Bit	**Attr**	**Default**	**Description**
31:0	RWST	0000h	DATA: Late failure data [63:32] **Note**: Read/Write for firmware debug purposes ONLY

11.5.1.12 MB_ERR_DATA04: Memory Test Error Data 0 Bytes [17:16]

Stores the last 16 bits of the 1st 144 bit failure data

Function:3 **Offset:C0h**			
Bit	**Attr**	**Default**	**Description**
15:0	RWST	0000h	DATA: Late failure data [71:64] & Early failure data [71:64] **Note**: Read/Write for firmware debug purposes ONLY

11.5.2 Memory Registers

11.5.2.1 DAREFTC: DRAM Auto-Refresh Timing and Control

Function:3 **Offset:70h**			
Bit	**Attr**	**Default**	**Description**
31:24	RV	0	Reserved
23:16	RWST	4Eh	TRFC: DRAM refresh period

Function:3 **Offset:70h**			
Bit	**Attr**	**Default**	**Description**
15	RW	0	AREFEN: auto-refresh enable **Note:** This bit can also be cleared by the AMB self-refresh FSM as described in section 3.5.1
14:0	RWST	0C30h	TREFI: DRAM refresh interval

11.5.2.2 DSREFTC: DRAM Self-Refresh Timing and Control

Function:3 **Offset:74h**			
Bit	**Attr**	**Default**	**Description**
23:17	RV	0	Reserved
16	RWST	1	**DISSREXIT**: Disable DRAM Self-Refresh Exit when the link comes up
15:8	RWST	56h	**TXSNR**: DRAM Self-Refresh Exit to Non-Read Command Timing
7:4	RWST	Fh	TRP: DRAM Precharge Timing
3	RV	0	Reserved
2:0	RWST	7h	**TCKE**: DRAM Minimum CKE Pulse Width

11.5.2.3 MTR: Memory Technology Register

This register provides a local definition of the organization of DIMMs.

Note: These registers shall be copied from the SPD.

Function:3 **Offset:77h**			
Bit	**Attr**	**Default**	**Description**
7	RV	0	*Reserved*
6	RWST	0	WIDTH: Technology – DRAM data width Define the data width of SDRAMs within these DIMM's 0 = x4 (4 bits wide) 1 = x8 (8 bits wide)

Function:3 **Offset:77h**			
Bit	**Attr**	**Defaul t**	**Description**
5	RWS T	0	NUMRANK: Technology – Number of Ranks Define the number of ranks within these DIMM's 0 = single ranked 1 = double ranked
4	RWS T	0	NUMBANK: Technology – Number of Banks Define the number of banks within these DIMM's 0 = 4 banks 1 = 8 banks
3:2	RWS T	00	NUMROW: Technology – Number of Rows Define the number of rows within these DIMM's 00 = 8,192 01 = 16,384 10 = 32,768 11 = 65,536
1:0	RWS T	00	NUMCOL: Technology – Number of Columns Define the number of columns within these DIMM's 00 = 1,024 01 = 2,048 10 = 4,096 11 = 8,192

11.5.2.4 DRT: DRAM Timing Control

Function:3 **Offset:78h**			
Bit	**Attr**	**Defaul t**	**Description**
31	RV	0	*Reserved*
30:29	RWS T	00	TRAS: DRAM tRAS minimum required delay from active command to precharge command. Delay cycles based on JEDEC DDRII spec 45 ns for DDRII 400/533/667. Based on the latest JEDEC spec (JESD79-2, Sept 2003) for DDRII 800 MHz min tRAS is not defined yet. tRASMIN clocks delay: 00 => 18 for DDRII 800 MHz 01 => 15 for DDRII 667 MHz 10 => 12 for DDRII 533 MHz 11 => Reserved

Function:3 **Offset:78h**			
Bit	**Attr**	**Defaul t**	**Description**
28:27	RWS T	00	TRTP: DRAM cell internal read to precharge command delay. tRTP clocks delay: 00 => 2 01 => 3 10 => 4 11 => 5
26:24	RWS T	000	BBRW: Back to Back Read-Write turn around. This field determines the minimum number of CMDCLK between Read-Write commands. The purpose of these 3 bits are to control the turnaround time on the DQ bus. Regular setting will be based on BL/2 + 2 tCK. BL4: tR2W = 4 tCK BL8: tR2W = 6 tCK Command clocks apart based on the following encoding: 000 => 10 001 => 9 010 => 8 011 => 7 100 => 6 101 => 5 110 => 4 111 => 3 (stress mode, not recommended)
23	RV	0	Reserved
22:20	RWS T	000	BBWR: Back to Back Write-Read turn around. This field determines the minimum number of CMDCLK between Write-Read commands. The purpose of these 3 bits are to control the turnaround time on the DQ bus. Regular setting will be based on (CL-1)+BL/2+tWTR. Command clocks apart based on the following encoding: 000 => 12 001 => 11 010 => 10 011 => 9 100 => 8 101 => 7 110 => 6 111 => 5 (stress mode, not recommended
19	RV	0	Reserved

Function:3 **Offset:78h**			
Bit	**Attr**	**Defaul t**	**Description**
18:16	RWS T	000	TWR: Twr DRAM Write Recovery delay Overall delay clocks will be (CL+AL-1) +BL/2 + tWR from write command to precharge command. 000 => 9 001 => 8 010 => 7 011 => 6 100 => 5 101 => 4 110 => 3 111 => 2
15:12	RWS T	0000	TRC: Trc DRAM activate to another activate delay 0000 => 26 0001 => 25 0010 => 24 0011 => 23 0100 => 22 0101 => 21 0110 => 20 0111 => 19 1000 => 18 1001 => 17 1010 => 16 1011 => 15 1100 => 14 1101 => 13 1110 => 12 1111 => 11
11:10	RWS T	00	TRCD: Trcd DRAM RAS# to CAS# delay 00 => 6 01 => 5 10 => 4 11 => 3 If AL >= Trcd, Read/Write command will be issued right after ACT cycle.

Function:3 **Offset:78h**			
Bit	**Attr**	**Defaul t**	**Description**
9:8	RWS T	00	TRP: Trp DRAM RAS# to Precharge delay 00 => 6 01 => 5 10 => 4 11 => 3
7:0	RWS T	00h	NOPCNT: Programmable NOP insertion (Device Deselect actually). Number of Nops will be inserted between read/write commands to slow down MemBIST activities. Up to 255 clocks NOPs can be programmed to insert delay between read/ write commands. If NOPs delay is programmable less than the required DRAM timing, Overall NOP delay from command to command will not be seen.

11.5.2.5 DRC: DRAM Controller Mode Register

This register controls the mode of the DRAM Controller.

Function:3 **Offset:7Ch**			
Bit	**Attr**	**Defaul t**	**Description**
31:30	RV	00	Reserved
29	RW	0	**INITDONE: Initialization Complete.** This scratch bit communicates software state from the AMB to BIOS. BIOS sets this bit to 1 after initialization of the DRAM memory array is complete. This bit has no effect on AMB operation.
28	RV	0	Reserved
27:24	RWS T	0	CLKDIS: clock[3:0] output disable
23	RWS T	0	SEQADDR: When set to 1 turns off address balancing to support DRAMs programmed for Sequential Burst Type
19:22	RV	00	Reserved
18	RWS T	1	**ODTZ: On-Die Termination Strength**. “0” Disabled “1” Enabled
17	RWS T	0	**HLDDIS**: command/address hold disable
16	RWS T	0	**BALDIS**: command/address balancing disable
15	RW	0	**CADIS**: command/address output disable
14	RW	0	**CSDIS**: chip select output disable

Function:3 **Offset:7Ch**			
Bit	**Attr**	**Default**	**Description**
13	RW	0	**ODTDIS**: ODT output disable
12	RWST	1	**CKEFRCLOW**: CKE Force Low Forces CKE low. Must be cleared to enable normal DDR functionality. This bit overrides the CKE1 and CKE0 fields described below, and also overrides all channel commands and other hardware fuctions that would otherwise affect the state of the CKE outputs.
11	RW	0	**CKEDIS**: CKE output disable
10	RWST	0	CKE1: CKE output 1 control and status. Software can write to this bit to change the state of the CKE 1 output. Hardware will update this bit with the current status of the CKE1 output two core cycles after a channel command or other hardware function changes the state of the CKE1 output. ‘1’ = CKE1 pads asserted. ‘0’ = CKE1 pads de-asserted.
9	RWST	0	CKE0: CKE output 0 control and status. Software can write to this bit to change the state of the CKE 0 output. Hardware will update this bit with the current status of the CKE 0 output two core cycles after a channel command or other hardware function changes the state of the CKE 0 output. ‘1’ = CKE0 pads asserted. ‘0’ = CKE0 pads de-asserted.
8	RWST	0	**BL**: DRAM burst length. ‘1’ = bl8 ‘0’ = bl4
7:4	RWST	2h	**AL**: DRAM Additive Latency [3:0]
3:0	RWST	3h	**CL**: DRAM CAS Latency [3:0]

11.5.3 Thermal Sensor Registers

11.5.3.1 TEMPLO: Temperature Low Trip Point

Low trip point.

Function:3 **Offset:80h**			
Bit	**Attr**	**Default**	**Description**
7:0	RWST	FFh	TEMPLO: Low threshold trip point

11.5.3.2 TEMPMID: Temperature Mid Trip Point

Mid trip point.

Function:3 **Offset:81h**			
Bit	**Attr**	**Default**	**Description**
7:0	RWST	FFh	TEMPMID: Mid threshold trip point

11.5.3.3 TEMPHI: Temperature High Trip Point

High trip point.

Function:3 **Offset:82h**			
Bit	**Attr**	**Default**	**Description**
7:0	RWST	FFh	TEMPHI: High threshold trip point

11.5.3.4 UPDATED: Update Temp Diff Bit

Take new temperature sample and update the temp diff bit (INCREASING).

Function:3 **Offset:83h**			
Bit	**Attr**	**Default**	**Description**
7:1	RV	00h	reserved
0	RWS	0	UPDATE: Write ‘1’ = latch current temperature (TEMP) and update INCREASING bit of TEMPSTAT register; Automatically clears this bit to ‘0’ after INCREASING bit is updated; Write ‘0’ - no effect

11.5.3.5 TEMPSTAT: Thermal Sensor Status Register

This register controls and reports temperature status.

Function:3 **Offset:84h**			
Bit	**Attr**	**Default**	**Description**
7:6	RV	0	Reserved
5	RWST	0	NoAutoUpdate ‘1’ = turns off update of temp stat values so that forced values written in by firmware are not overwritten ‘0’ = trip registers automatically updated as normal
4	RW	0	**INCREASING** ‘1’ = Temperature has increased since the last time UPDATE bit was set in UPDATED register. ‘0’ = Temperature has not increased since the last time UPDATE bit was set in UPDATED register. This is reflected as the Rising/Falling value in the Thermal Trip field of northbound FBD status 0.
3	RWST	0	**OVERTEMPHI** ‘1’ = Temperature is above or equal to TEMPHI.TRIP ‘0’ = Temperature is below TEMPHI.TRIP
2	RWST	0	**OVERTEMPMID** ‘1’ = Temperature is above or equal to TEMPMID.TRIP ‘0’ = Temperature is below TEMPMID.TRIP This is reflected in the Thermal Trip value of northbound FBD status 0
1	RWST	0	**OVERTEMPLO** ‘1’ = Temperature is above or equal to TEMPLO.TRIP ‘0’ = Temperature is below TEMPLO.TRIP This is reflected in the Thermal Trip value of northbound FBD status 0
0	RWST	0	**TEMPHIENABLE** ‘1’ = Allow OVERTEMPHI=1 to shut down the DDR channel, drop DDR commands, log an error, and take FBD links to EI. ‘0’ = OVERTEMPHI=1 only logs an error.

Notes:

1. The OVERTEMPLO, OVERTEMPMID and OVERTEMPHIGH bits of the TEMPSTAT register are refreshed whenever TEMP has a new value. This is independent of the UPDATE bit in the UPDATED register.
2. TEMPSTAT[3:1] = 000, when temperature is below TEMPLO.TRIP.
3. TEMPSTAT[3:1] = 001, when temperature is above or equal to TEMPLO.TRIP but below TEMPMID.TRIP.
4. TEMPSTAT[3:1] = 011, when temperature is above or equal to TEMPMID.TRIP but below TEMPHIGH.TRIP.
5. TEMPSTAT[3:1] = 111, when temperature is above or equal to TEMPHIGH.TRIP

11.5.3.6 TEMP: Temperature A/D

Current temperature reading. This- 8-bit with 0.5 degree resolution is continuously and automatically kept up to date

Function:3 **Offset:85h**			
Bit	**Attr**	**Default**	**Description**
7:0	RO	00h	DEGREES: Current temperature - binary encode 0 - 127 degrees C

by AMB hardware.

11.6 Implementation Specific DDR Initialization and Calibration Registers (Function 4)

11.6.1 DDR Calibration

11.6.1.1 DCALCSR: DCAL Control and Status

Function:4 **Offset:40h**			
Bit	**Attr**	**Default**	**Description**
31	RWS	0	**START: Start Operation** When set to 1 by software, the operation selected by the dcalcsr.opcode is initiated. Hardware clears this bit when the operation is complete.
30:28	RW	0	**FAIL: Completion Status** 1xx = Fail, 0xx = Pass **Note**: Read/Write for firmware debug purposes ONLY
27:23	RV	00	Reserved
22:21	RW	00	CS: Rank select This field corresponds to the chip select outputs: CS[1:0]. Setting a bit in this field will cause the corresponding CS pin to drive low when commands are issued on the DDR bus. This field Applies to NOP, Refresh, Precharge all, and MRS/EMRS commands.
20:15	RV	00	Reserved
14:4	RW	000h	**OPMODS:** Operation modifiers
3:0	RW	0h	**OPCODE:** “0000” = NOP “0001” = Refresh “0010” = Pre-Charge “0011” = MRS/EMRS “0101” = Automatic DQS Delay Calibration “1100” = Automatic Receive Enable Calibration “1101” = Self-Refresh Entry All other settings are reserved

11.6.1.2 DCALADDR: DCAL Address Register

Function:4 **Offset:44h**			
Bit	**Attr**	**Default**	**Description**
31:0	RW	0000_0000h	**DCALADDR: DCAL Address and Other Information Based on Opcode.**

Table 11.16 — Functional Characteristics of DCALADDR (Sheet 1 of 2)

Bit	**NOP, Refresh, Pre-Charge, MRS/ EMRS, and Self-Refresh Entry Commands intiated by DCALCSR**
31	DRAM Address Bus 15:0
30	
29	
28	
27	
26	
25	
24	
23	
22	
21	
20	
19	
18	
17	
16	
15	
14	
13	
12	
11	
10	
9	
8	
7	
6	
5	
4	
3	

Table 11.16 — Functional Characteristics of DCALADDR (Sheet 2 of 2)

Bit	NOP, Refresh, Pre-Charge, MRS/ EMRS, and Self-Refresh Entry Commands intiated by DCALCSR
2	DRAM Bank Address Bus 2:0
1	
0	

11.6.1.3 S3RESTORE [15:0] : DDR State Restore

These registers contain implementation dependent state needed to recover connections to DRAMs left in self refresh without destroying data in the DRAMs. For example, these may contain calibration information for DDR IO drivers. BIOS will copy these registers into some form of stable storage prior to system standby then restore these registers after system wakes up.

Note: The functionality of the AMB S3 restore registers is design dependent. Some of the S3 restore registers may or may not be implemented depending the AMB design.

Function:4 **Offset:E0h - A4h**			
Bit	**Attr**	**Default**	**Description**
31:0	RWST	00	S3STATE:

11.6.1.4 DDR2ODTC: DDR2 DRAM On-Die Termination Control

The DDR2ODTC controls the behavior of the ODT output (one ODT output per command bus copy). There is a separate field to control the behavior for reads to rank0, reads to rank1, writes to rank0, and writes to rank1. Only the lsb of each field is used, and the msb has no effect. When an lsb of a field is set to one, the ODT pins will drive high, at the appropriate time relative to data on the DDR bus, when the selected transaction (read or write) is issued to the selected rank (0 or 1.) If a field is set to 0, the ODT output continues to drive low during the transaction, as it does during idle cycles.

Function:4 **Offset:FCh**			
Bit	**Attr**	**Defaul t**	**Description**
7:6	RWST	0h	R1ODTWR: ODT control during writes to CS1 x1: ODT pins will drive high x0: ODT pins remain driving low
5:4	RWST	0h	R1ODTRD: ODT control during reads to CS1
3:2	RWST	0h	R0ODTWR: ODT control during writes to CS0
1:0	RWST	0h	R0ODTRD: ODT control during reads to CS0

11.7 DFX Registers (Function 5)

11.7.1 Transparent Mode Registers

11.7.1.1 TRANSCFG: Transparent Mode Configuration

This register enables and controls FBD DFX transparent mode features.

Function:5 **Offset:3Ch**			
Bit	**Attr**	**Default**	**Description**
31:29	RV	0h	Reserved
28	RWST	0	ENDOUT: enable data output on transparent data/status pins when set, output status when clear
27	RWST	0	LGFBITS: log bits that fail the compare when set, log raw read data when clear.
26	RWST	0	LGFFAIL: log first failure in any burst position.
25:24	RWST	00	BSTPOS: burst position to log data/failed bits from when LGFFAIL bit is not set. 0 = first burst in bl4 or bl8 mode 1 = last burst of bl4, second burst of bl8 2 = third burst of bl8 3 = last burst of bl8
23:20	RWST	0h	DRAMRD: byte of data bus selected to be output on transparent data/status pins when ENDOUT bit is set. 8= DQS 17 and DQS 8 7= DQS 16 and DQS 7 ... 0 = DQS 9 and DQS 0
19:16	RWST	0h	DRAMWR: byte of data bus selected to receive transparent write data, and byte of data bus to be compared against transparent read data. Fh = all bytes 8= DQS 17 and DQS 8 7= DQS 16 and DQS 7 ... 0 = DQS 9 and DQS 0
15:0	RWST	0000h	DFTDATA: default data for bytes not selected by the DRAMWR field. This field has early/even data in the upper 8 bits, and late/odd data in the lower 8 bits.

11.7.1.2 TRANDERR[8:0]: Transparent Mode Data Error Logs

This register stores data returned from DRAM byte groups on failing transparent mode tests.

Function:5 **Offset:50h, 4Eh, 4Ch, 4Ah, 48h,46h, 44h, 42h, 40h**			
Bit	**Attr**	**Default**	**Description**
15:8	RWST	00h	LATE_DATA: **Note**: Read/Write for firmware debug purposes ONLY
7:0	RWST	00h	EARLY_DATA: **Note**: Read/Write for firmware debug purposes ONLY

11.7.1.3 TRANSCTRL: Transparent Mode Control

This register enables and controls FBD DFX transparent mode features.

Function:5 **Offset:80h**			
Bit	**Attr**	**Default**	**Description**
7:1	RV	00h	Reserved
0	RWST	0	ENTRNSPMODE: Transparency Mode Enable 1 - Enables Transparency Mod

11.7.2 Logic Analyzer Interface (LAI) Registers

This block of registers describe the optional LAI mode for AMBs.

11.7.2.1 LAI: LAI Operation Modes

This register controls and reports theAMBs LAI mode and Qual controls.

Function:5 **Offset:B8h**			
Bit	**Attr**	**Default**	**Description**
31:16	RV	0000h	Reserved
15	RWST	0	**RAWMODE: data connected to LAI** 0: LAI outputs contain initialization state information **prior to L0S then lane data after L0S** 1: LAI outputs connected to FBD data inputs even though valid timing is not present
14	RV	0	Reserved
13	RWST	0	QUALMODE: Assert Qual for all non-filtered frames, or only assert Qual for all non-filtered frames between start and stop events. 0: Ignore Qual start/stop events 1: Assert Qual after a start event, and deassert Qual after a stop events
12	RWST	0	FILTERSYNC: Filter the frame (do not assert Qual) if the frame is a sync. 0: Disable sync filtering 1: Enable sync filtering
11:6	RV	00h	Reserved
5:0	RWST	3Fh	QUALPERIOD: Additional number of frames Qual remains asserted Power-on default to 63

11.7.2.2 SBMATCHU: Upper Southbound Match Register

This register sets the upper 8 bits of data match for three southbound commands..

Function:5 **Offset:BCh**			
Bit	**Attr**	**Default**	**Description**
31:24	RV	00h	Reserved
23:16	RWST	00h	**CMD2:** Upper 8 bits [39:32] of southbound command 2
15:8	RWST	00h	**CMD1:** Upper 8 bits [39:32] of southbound command 1
7:0	RWST	00h	**CMD0:** Upper 8 bits [39:32] of southbound command 0

Match and Mask bit numbering of SB frames is as follows: -

- where N= 0 for slot A, 4 for slot B and 8 for slot C

Table 11.17 — Bit Locations for SB Match and Mask

Xfr\lane	9	8	7	6	5	4	3	2	1	0
0 + N	B36	B32	B28	B24	B20	B16	B12	B8	B4	B0
1 + N	B37	B33	B29	B25	B21	B17	B13	B9	B5	B1
2 + N	B38	B34	B30	B26	B22	B18	B14	B10	B6	B2
3 + N	B39	B35	B31	B27	B23	B19	B15	B11	B7	B3

11.7.2.3 SBMATCHL0: Lower Southbound Match Register 0

This register sets the lower 32 bits of data match for match southbound command 0.

Function:5 **Offset:C0h**			
Bit	**Attr**	**Default**	**Description**
31:0	RWST	00004000h	**CMD:** Lower 32bits [31:0] of southbound command power on default = match Synch

11.7.2.4 SBMATCHL1: Lower Southbound Match Register 1

This register sets the lower 32 bits of data match for match southbound command 1.

Function:5 **Offset:C4h**			
Bit	**Attr**	**Default**	**Description**
31:0	RWST	00100000h	**CMD:** Lower 32bits [31:0] of southbound command power on default = match Activate

11.7.2.5 SBMATCHL2: Lower Southbound Match Register 2

This register sets the lower 32 bits of data match for match southbound command 2.

Function:5 **Offset:C8h**			
Bit	**Attr**	**Default**	**Description**
31:0	RWST	00014000h	**CMD:** Lower 32bits [31:0] of southbound command power on default = match Write Config Reg

11.7.2.6 SBMASKU: Upper Southbound Mask Register

This register sets the upper 8 bits of data mask for three southbound commands.

Function:5 **Offset:CCh**			
Bit	**Attr**	**Default**	**Description**
31:24	RV	00h	Reserved
23:16	RWST	00h	**CMDMASK2:** Upper 8 bits [39:32] of southbound command 2 mask 0: Do not include this bit in match comparison 1: Include this bit in match comparison
15:8	RWST	00h	**CMDMASK1:** Upper 8 bits [39:32] of southbound command 1 mask 0: Do not include this bit in match comparison 1: Include this bit in match comparison
7:0	RWST	00h	**CMDMASK0:** Upper 8 bits [39:32] of southbound command 0 mask 0: Do not include this bit in match comparison 1: Include this bit in match comparison

11.7.2.7 SBMASKL0: Lower Southbound Mask Register 0

This register sets the lower 32 bits of data mask for match southbound command 0.

Function:5 **Offset:D0h**			
Bit	**Attr**	**Default**	**Description**
31:0	RWST	031FC000h	**CMDMASK:** Lower 32bits [31:0] of southbound command mask. 0: Do not include this bit in match comparison 1: Include this bit in match comparison power on default = match Sync

11.7.2.8 SBMASKL1: Lower Southbound Mask Register 1

This register sets the lower 32 bits of data mask for match southbound command 1.

Function:5 **Offset:D4h**			
Bit	**Attr**	**Default**	**Description**
31:0	RWST	00100000h	**CMDMASK:** Lower 32bits [31:0] of southbound command mask. 0: Do not include this bit in match comparison 1: Include this bit in match comparison power on default = match Activate

11.7.2.9 SBMASKL2: Lower Southbound Mask Register 2

This register sets the lower 32 bits of data mask for match southbound command 2.

Function:5 **Offset:D8h**			
Bit	**Attr**	**Default**	**Description**
31:0	RWST	001FC000h	**CMDMASK:** Lower 32bits [31:0] of southbound command mask. 0: Do not include this bit in match comparison 1: Include this bit in match comparison power on default = match Write Config Reg

11.7.2.10 MMEVENTSEL: Match/Mask Event Selection Register

Selects 1 of 13 local match events described below for promotion to local event select. Three local events MMEVENT[2:0] can be associated with one of these local match events..

Function:5 **Offset:DCh**			
Bit	**Attr**	**Default**	**Description**
15:12	RV	0h	Reserved
11:8	RWST	2h	MMEVENT2SEL: default: match pattern 0 to slot A only for sync
7:4	RWST	Ah	MMEVENT1SEL: default: match pattern 1 to slot A , B or C for activate
3:0	RWST	3h	MMEVENT0SEL: default: match pattern 2 to slot B only for write config reg

Table 11.18 — Local Mask and Match Events selected by MMEVENTnSEL fields

MM Event	Description
15:13	Reserved
12	**FRAMEMATCH** Bit pattern in slot A matches SBMATCH/SBMASK 0 **AND** Bit pattern in slot B matches SBMATCH/SBMASK 1 **AND** Bit pattern in slot C matches SBMATCH/SBMASK 2
11	**SLOTMATCH0** Command in slot A, B, or C matches SBMATCH/ SBMASK 0
10	**SLOTMATCH1** Command in slot A, B, or C matches SBMATCH/ SBMASK 1
9	**SLOTMATCH2** Command in slot A, B, or C matches SBMATCH/ SBMASK 2
8	**SLOTCMATCH0** Command in slot C matches SBMATCH/SBMASK 0
7	**SLOTCMATCH1** Command in slot C matches SBMATCH/SBMASK 1
6	**SLOTCMATCH2** Command in slot C matches SBMATCH/SBMASK 2
5	**SLOTBMATCH0** Command in slot B matches SBMATCH/SBMASK 0
4	**SLOTBMATCH1** Command in slot B matches SBMATCH/SBMASK 1
3	**SLOTBMATCH2** Command in slot B matches SBMATCH/SBMASK 2
2	**SLOTAMATCH0** Command in slot A matches SBMATCH/SBMASK 0
1	**SLOTAMATCH1** Command in slot A matches SBMATCH/SBMASK 1
0	**SLOTAMATCH2** Command in slot A matches SBMATCH/SBMASK 2

11.7.2.11 EVENTSEL0: Event Selection Register

·In LAI mode, selects 1 of 32 local events (see EVENT register) for 2 uses (Qual Start and Qual Stop) and sets programmable delay for QualStop. In Normal mode, selects local event for 2 uses (error injection and NB in-band event signaling) and sets programmable delay for error injection..

Function:5 **Offset:E0h**			
Bit	**Attr**	**Default**	**Description**
31:21	RV	00h	Reserved
20:15	RWST	3Fh	QUALSTOPDELAY: in LAI Mode Additional number of clocks QualStop is delayed before use (0 to 63) Power-on default to 63 INJERRORDELAY: in Normal Mode Additional number of clocks INJERROR is delayed before use (0 to 63) Power-on default to 63
14:10	RW	00h	INBAND: in LAI Mode No effect. Northbound in-band debug events can not be asserted in LAI mode INBAND: in Normal Mode If selected event occurs, assert the northbound in-band event bit in next sync status 0 return and in FBDS0.S3
9:5	RWST	00h	QUALSTART: in LAI Mode If selected event occurs, enable assertion of Qual until next QUALSTOP
4:0	RWST	00h	QUALSTOP: in LAI Mode • If selected event occurs, disable assertion of Qual until next QUALSTART INJERROR: in Normal Mode • If selected event occurs, inject error selected by EICNTL

11.7.2.12 EVENTSEL1: Event Selection Register

·Selects 1 of 32 local events (see EVENT register) for each of six events transmitted to the LAI interface (events[5:0]).

Function:5 **Offset:E4h**			
Bit	**Attr**	**Default**	**Description**
31:30	RV	00	Reserved
29:25	RWST	0Ah	LAITRIGGER5: Local event selected and transmitted to LAI as TRIGGER5 Default on power on to MM[1] event= Activate on any command
24:20	RWST	0Bh	LAITRIGGER4: Local event selected and transmitted to LAI as TRIGGER4 Default on power on to MM[2] event= Sync command in slot A
19:15	RWST	13h	LAITRIGGER3: Local event selected and transmitted to LAI as TRIGGER3 Default on power on to select in-band debug event 3
14:10	RWST	12h	LAITRIGGER2: Local event selected and transmitted to LAI as TRIGGER2 Default on power on to select in-band debug event 2
9:5	RWST	11h	LAITRIGGER1: Local event selected and transmitted to LAI as TRIGGER1 Default on power on to select in-band debug event 1
4:0	RWST	10h	LAITRIGGER0: Local event selected and transmitted to LAI as TRIGGER0 Default on power on to select in-band debug event 0

11.7.2.13 EVENTSEL2: Event Selection Register

Selects 1 of 32 local events (see EVENT register) for each of five events transmitted to the LAI interface (events[10:6]).

Function:5 **Offset:E8h**			
Bit	**Attr**	**Default**	**Description**
31:30	RV	00	Reserved
29:25	RV	00h	Reserved
24:20	RWST	04h	LAITRIGGER10: Local event selected and transmitted to LAI as TRIGGER10 Default on power on to SB Unit Testing State detect
19:15	RWST	1Ah	LAITRIGGER9: Local event selected and transmitted to LAI as TRIGGER9 Default on power on to SB CRC error detect
14:10	RWST	0Dh	LAITRIGGER8: Local event selected and transmitted to LAI as TRIGGER8 Default on power on to Event Bus[1] event
9:5	RWST	0Ch	LAITRIGGER7: Local event selected and transmitted to LAI as TRIGGER7 Default on power on to Event Bus[0] event
4:0	RWST	09h	LAITRIGGER6: Local event selected and transmitted to LAI as TRIGGER6 Default on power on to MM[0] event= Write Register in command slot B

11.7.2.14 EVENT: Local LAI Event Register

This register sets a bit if a local event is hit. Except for QUAL, event signal internal to theAMBwill only toggle one cycle when bit is set to avoid multiple triggers per event. The 5-bit encoding for the bit number is used by the EVENTSEL register to select the event corresponding to the bit number.

Function:5 **Offset:F0h**			
Bit	**Attr**	**Default**	**Description**
31	RWCST	0	Spare:
30:25	RWCST	00h	ERROR EVENTS: • SB/NB failover[25], when unmasked: • SB CRC error[26], • thermal overload[27], • clock training violation (< 6 transitions in 512 UI) [28], • unimplemented register access[29], • other implementation specific errors[30] set on event and cleared by writing
24	RWCST	0	QUALFLAG:
23:16	RWCST	00h	INBANDEV: SB link in-band EV[7:0] set on event and cleared by writing
15:12	RWCST	0h	EV: Event Bus EV[3:0] set on event and cleared by writing
11:9	RWCST	0h	MMEVENT: MMEVENT[2:0] selected by MMEVENTSEL set on event and cleared by writing
8:1	RWST	0h	LINKST: FBD Link State: Disable[1], calibrate[2], training[3], testing[4], pollling[5], config[6], l0[7], l0s or recalibrate[8] One hot encoding of FBD link state
0	RO	0	NULL: Null Event: Bit never set

11.7.2.15 EVBUS: Event Bus Control Register

EVBUS fields select 1 of 32 local events (see EVENT register) for output to the GBAMB event bus. EVTYPE sets up type of event for each event bus pin and EVT fields set event bus timing filters.

Function:5 **Offset:F4h**			
Bit	**Attr**	**Default**	**Description**
31:27	RWST	00h	EVBUS3: Local event selected for event bus [3]
26:22	RWST	00h	EVBUS2: Local event selected for event bus [2]
21:17	RWST	03h	EVBUS1: Local event selected for event bus [1] default on power-on = start of initialization as detected by Init Training State Event
16:12	RWST	17h	EVBUS0: Local event selected for event bus [0] default on power-on = In-band Debug Event 7 (23d)
11:8	RWST	0h	EVTYPE: 0 = pulse event 1 = level event bit 11 for EVBUS3 thru bit 8 for EVBUS0
7:0	RWST	0Fh	EVT1: Min delay after EVBus trigger out deasserted before next assertion allowed and same value is used for Pulse width used when asserting all EVBus outputs Power on default of 16 clks

11.7.3 Error Injection Registers

11.7.3.1 EICNTL: Error Injection Control

This register controls the AMBerror injection logic.

Function:5 **Offset:FCh**			
Bit	**Attr**	**Default**	**Description**
7	RW	0	**EIEN:Error Injection Enable** 1= Error Injection enabled 0= Error Injection disabled
6:4	RW	000	**EITYPE: Type of error injection** 111 = Reserved; 110 = Reserved 101 = Force NB Error bit on next Status return 100 = Force Alert on event 011 = Reserved 010 =Reserved 001= Corrupt NB CRC on event 000= No error injection
3:0	RV	0h	Reserved

11.7.3.2 STUCKL: Stuck “ON” FBD Lanes

This register selects FBD Lanes to be stuck at EI following next link reset.

Function:5 **Offset:FEh**			
Bit	**Attr**	**Default**	**Description**
7:4	RV	0h	Reserved
3:0	RWST	Fh	NBSTUCK: NB Lane to be driven to EI to simulate a failed lane • 0h = lane 0: Dh = lane 13 and > 13 = NOP

11.8 Bring-up and Debug Registers (Function 6)

11.8.1 Southbound FBD IBIST registers

11.8.1.1 SBFIBPORTCTL: Southbound FBD IBIST Port Control Register

This register controls the operation of the IBIST logic.

Device:NodeID **Function: 6** **Offset:80h**			
Bit	**Attr**	**Defaul t**	**Description**
31:24	RV	00h	Reserved
23	RWST	0	SBNBMAP: Loopback mapping bit This bit will be sent during TS1 to the slave to specify which lanes needs to be looped back. Actual lanes looped back is specified in the FBD Architecture Spec.
22	RWST	0	CMMSTR: Compliance Measurement Mode start This puts the IBIST logic in CMM mode and IBIST TX engine will start transmitting IBIST patterns.
21:12	RWCST	000h	ERRCNT: Error Counter Total number of errors encountered in this port.
11:8	ROST	0h	ERRLNNUM: Error Lane Number This points to the first lane that encountered an error. If more than one lane reports an error in a cycle, the most significant lane number that reported the error will be logged.
7:6	RWCST	00	ERRSTAT: Port Error Status When IBIST is started, status goes to 01 until first start delimiter is received and then goes to 00 until the end or to10 if an error occurs. 00: No error. 01: Did not receive first start delimiter. 10: Transmission error (first error). 11: Reserved for future use
5	RWST	0	AUTOINVSWPEN: Auto Inversion sweep enable This bit enables the inversion shift register to continuously rotate the pattern in the FIBTXSHFT and FIBRXSHFT registers. 0: Disable Auto-inversion 1: Enable Auto-inversions
4	RWST	0	STOPONERR: Stop IBIST on Error 0: Do not stop on error, only update error counter 1: Stop on error
3	RWST	0	LOOPCON: Loop forever 0: No looping 1: Loop forever
2	RWCST	0	COMPLETE: IBIST done flag 0: Not done 1: Done

Device:NodeID **Function: 6** **Offset:80h**			
Bit	**Attr**	**Defaul t**	**Description**
1	RWST	0	MSTRMD: Master Mode Enable When this bit is set, during the next TS1 training set, IBIST will transmit patterns generated locally rather than looping back the incoming test data. 0: Disable Master mode. 1: Enable master mode.
0	RWST	0	IBISTR: IBIST Start When set, IBIST starts transmitting after the TS1 header is recognized during the next link initialization sequence. and **MSTRMD** bit is set.This bit also enables the receive engine to start looking for the start delimiter during TS1 training set. This bit is reset when IBIST is done. The IBIST transmitter can be stopped by setting this bit to 0. 0: Stop IBIST transmitter 1: Start IBIST transmitter

11.8.1.2 SBFIBPGCTL: SB IBIST Pattern Generator Control Register

This register contains bits to control the operation of the IBIST pattern generator. All counts are in 24 bit increments.

Device:NodeID **Function: 6** **Offset:84h**			
Bit	**Attr**	**Defaul t**	**Description**
31:26	RWS T	0Fh	OVRLOOPCNT: Overall Loop Count 0h: Reserved 1h:3Fh: Number of times to loop all the patterns.
25:21	RWS T	00h	CNSTGENCNT: Constant Generator Loop Counter 00h: Disable constant generator output 01h: 1Fh The number of times the constant generator counter pattern should loop before going to the next component. Each count represents 24 bits of 1's or 0's.
20	RWS T	0	CNSTGENSET: Constant Generator Setting 0: Generate 0 1: Generate 1
19:13	RWS T	0Fh	MODLOOPCNT: Modulo-N Loop Counter Each count represents 24 bits of the pattern specified by **MODPERIOD**. 00h: Disable Pattern Output 01h: 7Fh The number of times the Pattern Buffer should loop before going to the next component.

Device:NodeID **Function: 6** **Offset:84h**			
Bit	**Attr**	**Defaul t**	**Description**
12:10	RWS T	001b	MODPERIOD: Period of the Modulo-N counter Each encoding transmits a 24-bit pattern as specified below. All other encodings are reserved. 001: L/2 - 0101_0101_0101_0101_0101_0101 010: L/4 - 0011_0011_0011_0011_0011_0011 011: L/6 - 0001_1100_0111_0001_1100_0111 100: L/8 - 0000_1111_0000_1111_0000_1111 110: L/24 - 0000_0000_0000_1111_1111_1111
9:3	RWS T	0Fh	PATTLOOPCNT: Pattern Buffer Loop Counter 00h: Disable Pattern Output 01h: 7Fh The number of times the Pattern Buffer (**FIBPATTBUF1**) should be repeated before going to the next component.
2:0	RWS T	000	PTGENORD: Pattern Generation Order 000: Pattern Store + Modulo N Cntr + Constant Generator 001: Pattern Store + Constant Generator + Modulo N Cntr 010: Modulo N Cntr + Pattern Store + Constant Generator 011: Modulo N Cntr + Constant Generator + Pattern Store 100: Constant Generator + Pattern Store + Modulo N Cntr 101: Constant Generator + Modulo N Cntr + Pattern Store 110: Reserved 111: Reserved

11.8.1.3 SBFIBPATTBUF1: SB IBIST Pattern Buffer 1 Register

This register contains the pattern bits used in IBIST operations. Only the least significant 24 bits are used.

Function: 6 **Offset:88h**			
Bit	**Attr**	**Default**	**Description**
31:24	RV	00h	Reserved
23:0	RWST	02ccfdh	IBPATBUF: IBIST Pattern Buffer Pattern buffer storing the default and the user programmable pattern. Default: 02ccfdh

11.8.1.4 SBFIBTXMSK: SB IBIST Transmitter Mask Register

This register enables IBIST operations for individual lanes. This mask only applies to transmitters and not receivers.

Function: 6 **Offset:8Ch**			
Bit	**Attr**	**Default**	**Description**
31:10	RV	000000h	Reserved
9:0	RWST	3FFh	TXMASK: Selects which channels to enable for testing.

11.8.1.5 SBFIBRXMSK: SB IBIST Receiver Mask Register

This register enables IBIST operations for individual lanes. This mask only applies to receivers and not transmitters.

Function: 6 **Offset:90h**			
Bit	**Attr**	**Default**	**Description**
31:10	RV	000000h	Reserved
9:0	RWST	3FFh	RXMASK: Selects which channels to enable for testing.

11.8.1.6 SBFIBTXSHFT: SB IBIST Transmitter Inversion Shift Register

Each bit in this register enables inverting the patterns that is driven on corresponding lanes. If AUTOINVSWPEN bit is set in port control register, the TXINVSHFT field is rotated left at the completion of each pattern buffer set.

Function: 6 **Offset:94h**			
Bit	**Attr**	**Default**	**Description**
31:10	RV	000000h	Reserved
9:0	RWST	3FFh	TXINVSHFT: Transmitter Inversion Shift Register.

11.8.1.7 SBFIBRXSHFT: SB IBIST Receiver Inversion Shift Register

Each bit in this register enables inverting the patterns that is received on corresponding lanes. If AUTOINVSWPEN bit is set in port control register, the RXINVSHFT field is rotated left at the completion of each pattern buffer set.

Function: 6 **Offset:98h**			
Bit	**Attr**	**Default**	**Description**
31:10	RV	000000h	Reserved
9:0	RWST	3FFh	RXINVSHFT: Receiver Inversion Shift Register.

11.8.1.8 SBFIBRXLNERR: SB IBIST Receiver Lane Error Status

This records the error status from each lane.

Function: 6 **Offset:9Ch**			
Bit	**Attr**	**Default**	**Description**
31:10	RV	000000h	Reserved
9:0	ROST	000h	RXERRSTAT: Receiver Error Status

11.8.1.9 SBFIBPATTBUF2: SB IBIST Pattern Buffer 2 Register

This register contains the pattern bits used in IBIST operations. Only the least significant 24 bits are used.

Function: 6 **Offset:A0h**			
Bit	**Attr**	**Default**	**Description**
31:24	RV	00h	Reserved
23:0	RWST	fd3302h	IBPATBUF2: IBIST Pattern Buffer 2 Pattern buffer storing the default and the user programmable pattern. Default: fd3302h

11.8.1.10 SBFIBPATT2EN: SB IBIST Pattern Buffer 2 Enable

This specifies which lanes will carry the pattern specified in SBFIBPATTBUFF2.

Function: 6 **Offset:A4h**			
Bit	**Attr**	**Default**	**Description**
31:10	RV	00h	Reserved
9:0	RWST	000h	SBFIBPATT2EN: IBIST Pattern Buffer 2 enable Per lane enable for driving pattern buffer 2.

11.8.1.11 SBFIBINIT: SB IBIST Initialization Register

This register control southbound IBIST Testing.

Function: 6 **Offset:B0h**			
Bit	**Attr**	**Default**	**Description**
31	RV	0	Reserved
30:21	RWST	0c8h	SBTS0CNT: Southbound TS0 Count Number of TS0 sequences to transmit.

20:13	RWST	01h	SBTS1CNT: Southbound TS1 Count Number of TS1 sequences to transmit.
12:3	RWST	100h	SBDISCNT: Southbound Disable State Count Number of cycles to remain in disable state.
2	RWST	1	SBCALIBEN: Southbound Calibration Enable 1 - Perform FBD Calibration.
1	RV	0	Reserved
0	RWST	0	SBIBISTINITEN: IBIST Initialization Enable 1 - Start IBIST Testing with Southbound Transmitter as the host.

11.8.1.12 SBIBISTMISC: SB IBIST Initialization Miscellaneous Register

This register control southbound IBIST Testing.

Function: 6 **Offset:B4h**			
Bit	**Attr**	**Default**	**Description**
31:24	RV	00h	Reserved
23:20	RWST	0h	AMBID: Value of the AMB ID field during TS0
19:0	RWST	61a80h	SBIBISTCALPERIOD: Number of cycles to drive 1 during Calibration

11.8.2 Northbound FBD IBIST registers

11.8.2.1 NBFIBPORTCTL: Northbound FBD IBIST Port Control Register

This register controls the operation of the IBIST logic.

Function: 6 **Offset:C0h**			
Bit	**Attr**	**Default**	**Description**
31:24	RV	00h	Reserved
23	RWST	0	SBNBMAP: Loopback mapping bit This bit will be sent during TS1 to specify to the slave which lanes needs to be looped back. Actual lanes looped back is specified in the FBD Architecture Spec.
22	RWST	0	CMMSTR: Compliance Measurement Mode start This puts the IBIST logic in CMM mode and IBIST TX engine will start transmitting IBIST patterns.
21:12	RWCST	000h	ERRCNT: Error Counter Total number of errors encountered in this port.

Function: 6 **Offset:C0h**			
Bit	**Attr**	**Defaul t**	**Description**
11:8	ROST	0h	ERRLNNUM: Error Lane Number This points to the first lane that encountered an error. If more than one lane reports an error in a cycle, the most significant lane number that reported the error will be logged.
7:6	RWCST	00	ERRSTAT: Port Error Status When IBIST is started, status goes to 01 until first start delimiter is received and then goes to 00 until the end or to10 if an error occurs. 00: No error. 01: Did not receive first start delimiter. 10: Transmission error (first error). 11: Reserved
5	RWST	0	AUTOINVSWPEN: Auto Inversion sweep enable This bit enables the inversion shift register to continuously rotate the pattern in the FIBTXSHFT and FIBRXSHFT registers. 0: Disable Auto-inversion 1: Enable Auto-inversions
4	RWST	0	STOPONERR: Stop IBIST on Error 0: Do not stop on error, only update error counter 1: Stop on error
3	RWST	0	LOOPCON: Loop forever 0: No looping 1: Loop forever
2	RWCST	0	COMPLETE: IBIST done flag 0: Not done 1: Done
1	RWST	0	MSTRMD: Master Mode Enable When this bit is set, during the next TS1 training set, IBIST will transmit patterns generated locally rather than looping back the incoming test data. 0: Disable Master mode. 1: Enable master mode.
0	RWST	0	IBISTR: IBIST Start When set, IBIST starts transmitting after the TS1 header is recognized during the next link initialization sequence. and **MSTRMD** bit is set. This bit also enables the receive engine to start looking for the start delimiter during TS1 training set. This bit is reset when IBIST is done. The IBIST transmitter can be stopped by setting this bit to 0. 0: Stop IBIST transmitter 1: Start IBIST transmitter

11.8.2.2 NBFIBPGCTL: NB IBIST Pattern Generator Control Register

This register contains bits to control the operation of the IBIST pattern generator. All counts are in 24 bit increments.

Function: 6 **Offset:C4h**			
Bit	**Attr**	**Defaul t**	**Description**
31:26	RWST	0Fh	OVRLOOPCNT: Overall Loop Count 0h: Reserved 1h-3Fh: Number of times to loop all the patterns.
25:21	RWST	00h	CNSTGENCNT: Constant Generator Loop Counter 00h: Disable constant generator output 01h: 1Fh The number of times the constant generator counter pattern should loop before going to the next component. Each count represents 24 bits of 1's or 0's.
20	RWST	0	CNSTGENSET: Constant Generator Setting 0: Generate 0 1: Generate 1
19:13	RWST	0Fh	MODLOOPCNT: Modulo-N Loop Counter Each count represents 24 bits of the pattern specified by **MODPERIOD**. 00h: Disable Pattern Output 01h: 7Fh The number of times the Pattern Buffer should loop before going to the next component.
12:10	RWST	001b	MODPERIOD: Period of the Modulo-N counter Each encoding transmits a 24-bit pattern as specified below. All other encodings are reserved. 001: L/2 - 0101_0101_0101_0101_0101_0101 010: L/4 - 0011_0011_0011_0011_0011_0011 011: L/6 - 0001_1100_0111_0001_1100_0111 100: L/8 - 0000_1111_0000_1111_0000_1111 110: L/24 - 0000_0000_0000_1111_1111_1111
9:3	RWST	0Fh	PATTLOOPCNT: Pattern Buffer Loop Counter 00h: Disable Pattern Output 01h: 7Fh The number of times the Pattern Buffer (**IBPATTBUF**) should be repeated before going to the next component.
2:0	RWST	000	PTGENORD: Pattern Generation Order 000: Pattern Store + Modulo N Cntr + Constant Generator 001: Pattern Store + Constant Generator + Modulo N Cntr 010: Modulo N Cntr + Pattern Store + Constant Generator 011: Modulo N Cntr + Constant Generator + Pattern Store 100: Constant Generator + Pattern Store + Modulo N Cntr 101: Constant Generator + Modulo N Cntr + Pattern Store 110: Reserved 111: Reserved

11.8.2.3 NBFIBPATTBUF1: NB IBIST Pattern Buffer 1 Register

This register contains the pattern bits used in IBIST operations. Only the least significant 24 bits are used.

Function: 6 **Offset:C8h**			
Bit	**Attr**	**Default**	**Description**
31:24	RV	00h	Reserved
23:0	RWST	02ccfdh	IBPATBUF: IBIST Pattern Buffer Pattern buffer storing the default and the user programmable pattern.

11.8.2.4 NBFIBTXMSK: NB IBIST Transmitter Mask Register

This register enables IBIST operations for individual lanes. This mask only applies to transmitters and not receivers.

Function: 6 **Offset:CCh**			
Bit	**Attr**	**Default**	**Description**
31:14	RV	00000h	Reserved
13:0	RWST	3FFFh	TXMASK: Selects which channels to enable for testing.

11.8.2.5 NBFIBRXMSK: NB IBIST Receiver Mask Register

This register enables IBIST operations for individual lanes. This mask only applies to receivers and not transmitters.

Function: 6 **Offset:D0h**			
Bit	**Attr**	**Default**	**Description**
31:14	RV	00000h	Reserved
13:0	RWST	3FFFh	RXMASK: Selects which channels to enable for testing.

11.8.2.6 NBFIBTXSHFT: NB IBIST Transmitter Inversion Shift Register

Each bit in this register enables inverting the patterns that is driven on corresponding lanes. If AUTOINVSWPEN bit is set in port control register, the TXINVSHFT field is rotated left at the completion of each pattern buffer set.

Function: 6 **Offset:D4h**			
Bit	**Attr**	**Default**	**Description**
31:14	RV	00000h	Reserved
13:0	RWST	3FFFh	TXINVSHFT: Transmitter Inversion Shift Register.

11.8.2.7 NBFIBRXSHFT: NB IBIST Receiver Inversion Shift Register

Each bit in this register enables inverting the patterns that is received on corresponding lanes. If AUTOINVSWPEN bit is set in port control register, the RXINVSHFT field is rotated left at the completion of each pattern buffer set.

Function: 6 **Offset:D8h**			
Bit	**Attr**	**Default**	**Description**
31:14	RV	00000h	Reserved
13:0	RWST	3FFFh	RXINVSHFT: Receiver Inversion Shift Register.

11.8.2.8 NBFIBRXLNERR: NB IBIST Receiver Lane Error Status

This records the error status from each lane.

Function: 6 **Offset:DCh**			
Bit	**Attr**	**Default**	**Description**
31:14	RV	00000h	Reserved
13:0	ROST	0000h	RXERRSTAT: Receiver Error Status

11.8.2.9 NBFIBPATTBUF2: NB IBIST Pattern Buffer 2Register

This register contains the pattern bits used in IBIST operations. Only the least significant 24 bits are used.

Function: 6 **Offset:E0h**			
Bit	**Attr**	**Default**	**Description**
31:24	RV	00h	Reserved
23:0	RWST	fd3302h	IBPATBUF2: IBIST Pattern Buffer 2 Pattern buffer storing the default and the user programmable pattern.

11.8.2.10 NBFIBPATT2EN: NB IBIST Pattern Buffer 2 Enable

This specifies which lanes will carry the pattern specified in NBFIBPATTBUFF2.

Function: 6 **Offset:E4h**			
Bit	**Attr**	**Default**	**Description**
15:14	RV	00	Reserved
13:0	RWST	0000h	IBPATBUF2EN: IBIST Pattern Buffer 2 enable Per lane enable for driving pattern buffer 2.

11.8.2.11 NBFIBINIT: NB IBIST Initialization Register

This register control northbound IBIST Testing.

Function: 6 **Offset:F0h**			
Bit	**Attr**	**Default**	**Description**
31	RWST	0	SBIDLE: SB Link is not active This is to enable the NB link to complete training when there is no activity on the SB side. Normally NB waits for SB init to complete before proceeding with its training. 0 - Wait for SB 1 - Do not wait for SB
30:21	RWST	0c8h	NBTS0CNT: Northbound TS0 Count Number of TS0 sequences to transmit.
20:13	RWST	01h	NBTS1CNT: Northbound TS1 Count Number of TS1 sequences to transmit.
12:3	RWST	100h	NBDISCNT: Northbound Disable State Count Number of cycles to remain in disable state.
2	RWST	1	NBCALIBEN: Northbound Calibrating Enable 1 - Perform FBD Calibration.
1	RV	0	Reserved
0	RWST	0	NBIBISTINITEN: IBIST Initialization Enable 1 - Start IBIST Testing with Northbound Transmitter as the host.

11.8.2.12 NBIBISTMISC: NB IBIST Initialization Miscellaneous Register

This register control northbound IBIST Testing.

Function: 6 **Offset:F4h**			
Bit	**Attr**	**Default**	**Description**
31:24	RV	0h	Reserved
23:20	RWST	0h	AMBID: Value of the AMB ID field during TS0
19:0	RWST	61a80h	NBIBISTCALPERIOD: Number of cycles to drive 1 during Calibration

This Page Intentionally Left Blank

§

12 Ballout and Package Information

12.1 655-ball FBGA (23x29 Array, 19.5x24.5 mm Body Size, 0.8 mm Pitch, MO-261A Variation AA/BA) Pin configuration

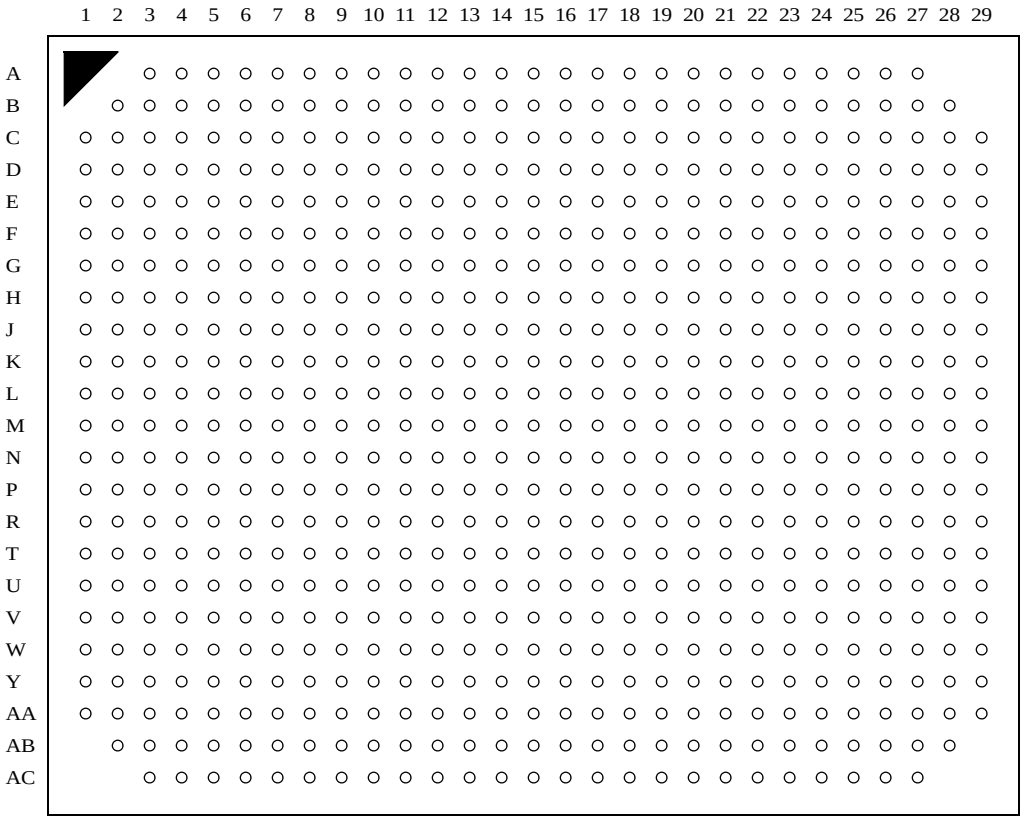

Figure 12.1 — Pinout Configuration

12.2 Pin Assignments for the Advanced Memory Buffer (AMB)

Table 12.1 — 655-Ball FBGA (23x29 Array, 19.5x24.5 mm Body Size, 0.8 mm Pitch, MO-261A Variation AA/BA) - Left Side

	1	2	3	4	5	6	7	8	9	10	11	12	13	14	15
A			V_{SS}	DQ26	DQ12	V_{DD}	DQS10	DQ13	V_{DD}	$\overline{DQS}$1	DQ10	V_{DD}	TESTLO	V_{DD}	V_{DD}
B		V_{DD}	DQS3	$\overline{DQS}$3	V_{SS}	DQ14	$\overline{DQS}$10	V_{SS}	DQ11	DQS1	V_{SS}	DDRC	TESTLO	V_{DD}	V_{SS}
C	V_{SS}	DQS2	DQ18	V_{SS}	DQ4	$\overline{DQS}$9	V_{SS}	DQ15	DQ9	V_{SS}	DQ8	DDRC	V_{SS}	DDRC	DQS17
D	DQ19	$\overline{DQS}$2	V_{SS}	DQ16	DQ24	V_{SS}	DQS9	DQ7	V_{SS}	DQ3	DQS0	V_{SS}	$\overline{DQS}$8	DQS8	V_{DD}
E	DQ21	V_{SS}	DQ17	DQ29	V_{SS}	DQ25	DQ6	V_{SS}	DQ5	DQ1	V_{SS}	DQ0	CB1	V_{SS}	CB2
F	V_{SS}	DQ20	DQ23	V_{SS}	DQ31	DQ27	V_{SS}	TESTLO	TEST	V_{SS}	$\overline{DQS}$0	DQ2	V_{DD}	CB0	CB3
G	$\overline{DQS}$11	DQS11	NC	NC	NC	V_{SS}	DQS12	$\overline{DQS}$12	NC	NC	NC	BFUNC	RFU	RFU	RFU
H	DQ22	V_{SS}	NC	NC	NC	DQ28	DQ30	V_{SS}	NC	NC	NC	V_{SS}	V_{DD}	V_{SS}	V_{DD}
J	V_{SS}	CLK2	NC	NC	NC	BA1A	V_{SS}	CKE1A	NC	NC	NC	V_{DD}	V_{SS}	V_{DD}	V_{SS}
K	$\overline{CLK}$2	CLK0	NC	NC	NC	V_{SS}	$\overline{WE}$A	$\overline{RAS}$A	NC	NC	NC	V_{SS}	V_{CC}	V_{SS}	V_{CC}
L	$\overline{CLK}$0	V_{SS}	NC	NC	NC	A0A	CKE0A	V_{SS}	NC	NC	NC	V_{CC}	V_{SS}	V_{CC}	V_{SS}
M	ODT0A	RFU	NC	NC	NC	$\overline{CAS}$A	V_{SS}	BA2A	NC	NC	NC	V_{SS}	V_{CC}	V_{SS}	V_{CC}
N	$\overline{CS}$1A	$\overline{CS}$0A	NC	NC	NC	V_{SS}	BA0A	A10A	NC	NC	NC	V_{CC}	V_{SS}	V_{CC}	V_{SS}
P	A6A	V_{SS}	NC	NC	NC	A2A	A1A	A3A	NC	NC	NC	V_{SS}	V_{CC}	V_{SS}	V_{CC}
R	V_{SS}	A8A	NC	NC	NC	A11A	V_{SS}	A5A	NC	NC	NC	V_{CC}	V_{SS}	V_{CC}	V_{SS}
T	A4A	A13A	NC	NC	NC	V_{SS}	A9A	A7A	NC	NC	NC	V_{SS}	V_{CC}	V_{SS}	V_{CC}
U	PN0	$\overline{PN}$0	NC	NC	NC	A15A	A14A	A12A	NC	NC	NC	RFU	V_{CCFBD}	V_{SS}	V_{SS}
V	PN1	$\overline{PN}$1	V_{SS}	SN0	$\overline{SN}$0	V_{CCFBD}	V_{SS}	V_{CCFBD}	V_{SS}	RFU[a]	RFU[a]	V_{CCFBD}	V_{SS}	V_{SS}	V_{SS}
W	PN2	$\overline{PN}$2	V_{SS}	SN1	$\overline{SN}$1	$\overline{SN}$3	$\overline{SN}$4	$\overline{SN}$5	$\overline{SN}$13	$\overline{SN}$12	$\overline{SN}$6	$\overline{SN}$7	$\overline{SN}$8	$\overline{SN}$9	$\overline{SN}$10
Y	PN3	$\overline{PN}$3	V_{SS}	SN2	$\overline{SN}$2	SN3	SN4	SN5	SN13	SN12	SN6	SN7	SN8	SN9	SN10
AA	V_{SS}	PN4	$\overline{PN}$4	V_{SS}	V_{SS}	V_{SS}	V_{SS}	V_{SS}	V_{SS}	V_{SS}	V_{SS}	V_{SS}	V_{SS}	V_{SS}	V_{SS}
AB		V_{SS}	$\overline{RESET}$	$\overline{PN}$5	$\overline{PN}$13	RFU[a]	$\overline{PN}$12	$\overline{PN}$6	$\overline{PN}$7	$\overline{PN}$8	$\overline{PN}$9	V_{SSAPLL}	V_{CCAPLL}	$\overline{PN}$10	$\overline{PN}$11
AC			V_{SS}	PN5	PN13	RFU[a]	PN12	PN6	PN7	PN8	PN9	FBDRES	PLLTSTO	PN10	PN11

[a] These pin positions are reserved for forward clocks to be used in future AMB implementations.

Table 12.2 — 655-Ball FBGA (23x29 Array, 19.5x24.5 mm Body Size, 0.8 mm Pitch, MO-261A Variation AA/BA) - Right Side

	16	17	18	19	20	21	22	23	24	25	26	27	28	29
A	V_{DD}	TEST	V_{DD}	DQ52	DQS15	V_{DD}	DQ49	$\overline{DQS}$6	V_{DD}	DQ48	DQ38	V_{DD}		
B	V_{DD}	TESTLO	DDRC	V_{SS}	$\overline{DQS}$15	DQ53	V_{SS}	DQS6	DQ50	V_{SS}	$\overline{DQS}$13	DQS13	V_{SS}	
C	$\overline{DQS}$17	V_{SS}	DDRC	DQ54	V_{SS}	DQ55	DQ51	V_{SS}	DQS7	DQ56	V_{SS}	DQ46	$\overline{DQS}$14	V_{DD}
D	CB6	CB7	V_{SS}	DQS16	DQ63	V_{SS}	DQ59	$\overline{DQS}$7	V_{SS}	DQ36	DQ44	V_{SS}	DQS14	DQ47
E	V_{SS}	CB5	$\overline{DQS}$16	V_{SS}	DQ61	DQ57	V_{SS}	DQ58	DQ39	V_{SS}	DQ33	DQ45	V_{SS}	DQ41
F	CB4	V_{DD}	DQ62	DQ60	V_{SS}	TEST	TEST	V_{SS}	DQ37	DQ35	V_{SS}	$\overline{DQS}$5	DQ43	V_{SS}
G	TESTLO	RFU	RFU	NC	NC	NC	DQS4	$\overline{DQS}$4	V_{SS}	NC	NC	NC	DQS5	DQ40
H	V_{SS}	V_{DD}	V_{SS}	NC	NC	NC	V_{SS}	DQ34	DQ32	NC	NC	NC	V_{SS}	DQ42
J	V_{DD}	V_{SS}	V_{DD}	NC	NC	NC	$\overline{RAS}$B	V_{SS}	RFU	NC	NC	NC	$\overline{CLK}$3	V_{SS}
K	V_{SS}	V_{CC}	V_{SS}	NC	NC	NC	ODT0B	$\overline{CS}$1B	V_{SS}	NC	NC	NC	$\overline{CLK}$1	CLK3
L	V_{CC}	V_{SS}	V_{CC}	NC	NC	NC	V_{SS}	$\overline{CAS}$B	$\overline{WE}$B	NC	NC	NC	V_{SS}	CLK1
M	V_{SS}	V_{CC}	V_{SS}	NC	NC	NC	$\overline{CS}$0B	V_{SS}	BA1B	NC	NC	NC	CKE0B	V_{SS}
N	V_{CC}	V_{SS}	V_{CC}	NC	NC	NC	A0B	A2B	V_{SS}	NC	NC	NC	BA0B	BA2B
P	V_{SS}	V_{CC}	V_{SS}	NC	NC	NC	V_{SS}	A4B	A1B	NC	NC	NC	V_{SS}	CKE1B
R	V_{CC}	V_{SS}	V_{CC}	NC	NC	NC	A6B	V_{SS}	A10B	NC	NC	NC	A3B	V_{SS}
T	V_{SS}	V_{CC}	V_{SS}	NC	NC	NC	A11B	A9B	V_{SS}	NC	NC	NC	A7B	A5B
U	V_{SS}	V_{CCFBD}	RFU	NC	NC	NC	A8B	A15B	A14B	SA0	SCL	SDA	$\overline{PS}$8	PS8
V	V_{CCFBD}	V_{SS}	V_{CCFBD}	V_{SS}	V_{CCFBD}	RFU[a]	RFU[a]	V_{SS}	A13B	A12 B	SA2	SA1	$\overline{PS}$7	PS7
W	V_{SS}	$\overline{SS}$0	$\overline{SS}$1	$\overline{SS}$2	$\overline{SS}$3	$\overline{SS}$4	$\overline{SS}$9	$\overline{SS}$5	$\overline{SS}$6	$\overline{SS}$7	$\overline{SS}$8	V_{SS}	$\overline{PS}$6	PS6
Y	V_{SS}	SS0	SS1	SS2	SS3	SS4	SS9	SS5	SS6	SS7	SS8	V_{SS}	$\overline{PS}$5	PS5
AA	V_{SS}	V_{SS}	V_{SS}	V_{SS}	V_{SS}	V_{SS}	V_{SS}	V_{SS}	V_{SS}	V_{SS}	V_{SS}	$\overline{PS}$9	PS9	V_{SS}
AB	V_{SS}	$\overline{SN}$11	V_{SS}	SCK	TESTLO _AB20	$\overline{PS}$0	$\overline{PS}$1	$\overline{PS}$2	$\overline{PS}$3	$\overline{PS}$4	RFU[a]	V_{DDSPD}	V_{SS}	
AC	RFU	SN11	V_{SS}	$\overline{SCK}$	TESTLO _AC20	PS0	PS1	PS2	PS3	PS4	RFU[a]	V_{SS}		

[a] These pin positions are reserved for forward clocks to be used in future AMB implementations.

Table 12.3 — Advanced Memory Buffer Signals By Ball Number (Sheet 1 of 6)

Ball No.	Signal		Ball No.	Signal		Ball No.	Signal
A3	VSS		B15	VSS		C25	DQ56
A4	DQ26		B16	VDD		C26	VSS
A5	DQ12		B17	TESTLO		C27	DQ46
A6	VDD		B18	DDRC_B18		C28	$\overline{\text{DQS}}$14
A7	DQS10		B19	VSS		C29	VDD
A8	DQ13		B20	$\overline{\text{DQS}}$15		D1	DQ19
A9	VDD		B21	DQ53		D2	$\overline{\text{DQS}}$2
A10	$\overline{\text{DQS}}$1		B22	VSS		D3	VSS
A11	DQ10		B23	DQS6		D4	DQ16
A12	VDD		B24	DQ50		D5	DQ24
A13	TESTLO		B25	VSS		D6	VSS
A14	VDD		B26	$\overline{\text{DQS}}$13		D7	DQS9
A15	VDD		B27	DQS13		D8	DQ7
A16	VDD		B28	VSS		D9	VSS
A17	TEST		C1	VSS		D10	DQ3
A18	VDD		C2	DQS2		D11	DQS0
A19	DQ52		C3	DQ18		D12	VSS
A20	DQS15		C4	VSS		D13	$\overline{\text{DQS}}$8
A21	VDD		C5	DQ4		D14	DQS8
A22	DQ49		C6	$\overline{\text{DQS}}$9		D15	VDD
A23	$\overline{\text{DQS}}$6		C7	VSS		D16	CB6
A24	VDD		C8	DQ15		D17	CB7
A25	DQ48		C9	DQ9		D18	VSS
A26	DQ38		C10	VSS		D19	DQS16
A27	VDD		C11	DQ8		D20	DQ63
B2	VDD		C12	DDRC_C12		D21	VSS
B3	DQS3		C13	VSS		D22	DQ59
B4	$\overline{\text{DQS}}$3		C14	DDRC_C14		D23	$\overline{\text{DQS}}$7
B5	VSS		C15	DQS17		D24	VSS
B6	DQ14		C16	$\overline{\text{DQS}}$17		D25	DQ36
B7	$\overline{\text{DQS}}$10		C17	VSS		D26	DQ44
B8	VSS		C18	DDRC_C18		D27	VSS
B9	DQ11		C19	DQ54		D28	DQS14
B10	DQS1		C20	VSS		D29	DQ47
B11	VSS		C21	DQ55		E1	DQ21
B12	DDRC_B12		C22	DQ51		E2	VSS
B13	TESTLO		C23	VSS		E3	DQ17
B14	VDD		C24	DQS7		E4	DQ29

Table 12.3 — Advanced Memory Buffer Signals By Ball Number (Sheet 2 of 6)

Ball No.	Signal		Ball No.	Signal		Ball No.	Signal
E5	VSS		F14	CB0		G23	$\overline{DQS}$4
E6	DQ25		F15	CB3		G24	VSS
E7	DQ6		F16	CB4		G25	NC
E8	VSS		F17	VDD		G26	NC
E9	DQ5		F18	DQ62		G27	NC
E10	DQ1		F19	DQ60		G28	DQS5
E11	VSS		F20	VSS		G29	DQ40
E12	DQ0		F21	TEST		H1	DQ22
E13	CB1		F22	TEST		H2	VSS
E14	VSS		F23	VSS		H3	NC
E15	CB2		F24	DQ37		H4	NC
E16	VSS		F25	DQ35		H5	NC
E17	CB5		F26	VSS		H6	DQ28
E18	$\overline{DQS}$16		F27	$\overline{DQS}$5		H7	DQ30
E19	VSS		F28	DQ43		H8	VSS
E20	DQ61		F29	VSS		H9	NC
E21	DQ57		G1	$\overline{DQS}$11		H10	NC
E22	VSS		G2	DQS11		H11	NC
E23	DQ58		G3	NC		H12	VSS
E24	DQ39		G4	NC		H13	VDD
E25	VSS		G5	NC		H14	VSS
E26	DQ33		G6	VSS		H15	VDD
E27	DQ45		G7	DQS12		H16	VSS
E28	VSS		G8	$\overline{DQS}$12		H17	VDD
E29	DQ41		G9	NC		H18	VSS
F1	VSS		G10	NC		H19	NC
F2	DQ20		G11	NC		H20	NC
F3	DQ23		G12	BFUNC		H21	NC
F4	VSS		G13	RFU		H22	VSS
F5	DQ31		G14	RFU		H23	DQ34
F6	DQ27		G15	RFU		H24	DQ32
F7	VSS		G16	TESTLO		H25	NC
F8	TESTLO		G17	RFU		H26	NC
F9	TEST		G18	RFU		H27	NC
F10	VSS		G19	NC		H28	VSS
F11	$\overline{DQS}$0		G20	NC		H29	DQ42
F12	DQ2		G21	NC		J1	VSS
F13	VDD		G22	DQS4		J2	CLK2

Table 12.3 — Advanced Memory Buffer Signals By Ball Number (Sheet 3 of 6)

Ball No.	Signal		Ball No.	Signal		Ball No.	Signal
J3	NC		K12	VSS		L21	NC
J4	NC		K13	VCC		L22	VSS
J5	NC		K14	VSS		L23	$\overline{\text{CASB}}$
J6	BA1A		K15	VCC		L24	$\overline{\text{WEB}}$
J7	VSS		K16	VSS		L25	NC
J8	CKE1A		K17	VCC		L26	NC
J9	NC		K18	VSS		L27	NC
J10	NC		K19	NC		L28	VSS
J11	NC		K20	NC		L29	CLK1
J12	VDD		K21	NC		M1	ODT0A
J13	VSS		K22	ODT0B		M2	RFU
J14	VDD		K23	$\overline{\text{CS1}}$B		M3	NC
J15	VSS		K24	VSS		M4	NC
J16	VDD		K25	NC		M5	NC
J17	VSS		K26	NC		M6	$\overline{\text{CASA}}$
J18	VDD		K27	NC		M7	VSS
J19	NC		K28	$\overline{\text{CLK}}$1		M8	BA2A
J20	NC		K29	CLK3		M9	NC
J21	NC		L1	$\overline{\text{CLK}}$0		M10	NC
J22	$\overline{\text{RASB}}$		L2	VSS		M11	NC
J23	VSS		L3	NC		M12	VSS
J24	RFU		L4	NC		M13	VCC
J25	NC		L5	NC		M14	VSS
J26	NC		L6	A0A		M15	VCC
J27	NC		L7	CKE0A		M16	VSS
J28	$\overline{\text{CLK}}$3		L8	VSS		M17	VCC
J29	VSS		L9	NC		M18	VSS
K1	$\overline{\text{CLK}}$2		L10	NC		M19	NC
K2	CLK0		L11	NC		M20	NC
K3	NC		L12	VCC		M21	NC
K4	NC		L13	VSS		M22	$\overline{\text{CS0}}$B
K5	NC		L14	VCC		M23	VSS
K6	VSS		L15	VSS		M24	BA1B
K7	$\overline{\text{WEA}}$		L16	VCC		M25	NC
K8	$\overline{\text{RASA}}$		L17	VSS		M26	NC
K9	NC		L18	VCC		M27	NC
K10	NC		L19	NC		M28	CKE0B
K11	NC		L20	NC		M29	VSS

Table 12.3 — Advanced Memory Buffer Signals By Ball Number (Sheet 4 of 6)

Ball No.	Signal		Ball No.	Signal		Ball No.	Signal
N1	$\overline{CS1}$A		P10	NC		R19	NC
N2	$\overline{CS0}$A		P11	NC		R20	NC
N3	NC		P12	VSS		R21	NC
N4	NC		P13	VCC		R22	A6B
N5	NC		P14	VSS		R23	VSS
N6	VSS		P15	VCC		R24	A10B
N7	BA0A		P16	VSS		R25	NC
N8	A10A		P17	VCC		R26	NC
N9	NC		P18	VSS		R27	NC
N10	NC		P19	NC		R28	A3B
N11	NC		P20	NC		R29	VSS
N12	VCC		P21	NC		T1	A4A
N13	VSS		P22	VSS		T2	A13A
N14	VCC		P23	A4B		T3	NC
N15	VSS		P24	A1B		T4	NC
N16	VCC		P25	NC		T5	NC
N17	VSS		P26	NC		T6	VSS
N18	VCC		P27	NC		T7	A9A
N19	NC		P28	VSS		T8	A7A
N20	NC		P29	CKE1B		T9	NC
N21	NC		R1	VSS		T10	NC
N22	A0B		R2	A8A		T11	NC
N23	A2B		R3	NC		T12	VSS
N24	VSS		R4	NC		T13	VCC
N25	NC		R5	NC		T14	VSS
N26	NC		R6	A11A		T15	VCC
N27	NC		R7	VSS		T16	VSS
N28	BA0B		R8	A5A		T17	VCC
N29	BA2B		R9	NC		T18	VSS
P1	A6A		R10	NC		T19	NC
P2	VSS		R11	NC		T20	NC
P3	NC		R12	VCC		T21	NC
P4	NC		R13	VSS		T22	A11B
P5	NC		R14	VCC		T23	A9B
P6	A2A		R15	VSS		T24	VSS
P7	A1A		R16	VCC		T25	NC
P8	A3A		R17	VSS		T26	NC
P9	NC		R18	VCC		T27	NC

Table 12.3 — Advanced Memory Buffer Signals By Ball Number (Sheet 5 of 6)

Ball No.	Signal		Ball No.	Signal		Ball No.	Signal
T28	A7B		V8	VCCFBD		W17	$\overline{SS}$0
T29	A5B		V9	VSS		W18	$\overline{SS}$1
U1	PN0		V10	RFU[a]		W19	$\overline{SS}$2
U2	$\overline{PN}$0		V11	RFU[a]		W20	$\overline{SS}$3
U3	NC		V12	VCCFBD		W21	$\overline{SS}$4
U4	NC		V13	VSS		W22	$\overline{SS}$9
U5	NC		V14	VSS		W23	$\overline{SS}$5
U6	A15A		V15	VSS		W24	$\overline{SS}$6
U7	A14A		V16	VCCFBD		W25	$\overline{SS}$7
U8	A12A		V17	VSS		W26	$\overline{SS}$8
U9	NC		V18	VCCFBD		W27	VSS
U10	NC		V19	VSS		W28	$\overline{PS}$6
U11	NC		V20	VCCFBD		W29	PS6
U12	RFU		V21	RFU[a]		Y1	PN3
U13	VCCFBD		V22	RFU[a]		Y2	$\overline{PN}$3
U14	VSS		V23	VSS		Y3	VSS
U15	VSS		V24	A13B		Y4	SN2
U16	VSS		V25	A12B		Y5	$\overline{SN}$2
U17	VCCFBD		V26	SA2		Y6	SN3
U18	RFU		V27	SA1		Y7	SN4
U19	NC		V28	$\overline{PS}$7		Y8	SN5
U20	NC		V29	PS7		Y9	SN13
U21	NC		W1	PN2		Y10	SN12
U22	A8B		W2	$\overline{PN}$2		Y11	SN6
U23	A15B		W3	VSS		Y12	SN7
U24	A14B		W4	SN1		Y13	SN8
U25	SA0		W5	$\overline{SN}$1		Y14	SN9
U26	SCL		W6	$\overline{SN}$3		Y15	SN10
U27	SDA		W7	$\overline{SN}$4		Y16	VSS
U28	$\overline{PS}$8		W8	$\overline{SN}$5		Y17	SS0
U29	PS8		W9	$\overline{SN}$13		Y18	SS1
V1	PN1		W10	$\overline{SN}$12		Y19	SS2
V2	$\overline{PN}$1		W11	$\overline{SN}$6		Y20	SS3
V3	VSS		W12	$\overline{SN}$7		Y21	SS4
V4	SN0		W13	$\overline{SN}$8		Y22	SS9
V5	$\overline{SN}$0		W14	$\overline{SN}$9		Y23	SS5
V6	VCCFBD		W15	$\overline{SN}$10		Y24	SS6
V7	VSS		W16	VSS		Y25	SS7

[a] These pin positions are reserved for forward clocks to be used in future AMB implementations.

Table 12.3 — Advanced Memory Buffer Signals By Ball Number (Sheet 6 of 6)

Ball No.	Signal		Ball No.	Signal		Ball No.	Signal
Y26	SS8		AB7	$\overline{\text{PN}}$12		AC19	$\overline{\text{SCK}}$
Y27	VSS		AB8	$\overline{\text{PN}}$6		AC20	TESTLO_AC20
Y28	$\overline{\text{PS}}$5		AB9	$\overline{\text{PN}}$7		AC21	PS0
Y29	PS5		AB10	$\overline{\text{PN}}$8		AC22	PS1
AA1	VSS		AB11	$\overline{\text{PN}}$9		AC23	PS2
AA2	PN4		AB12	VSSAPLL		AC24	PS3
AA3	$\overline{\text{PN}}$4		AB13	VCCAPLL		AC25	PS4
AA4	VSS		AB14	$\overline{\text{PN}}$10		AC26	RFU[a]
AA5	VSS		AB15	$\overline{\text{PN}}$11		AC27	VSS
AA6	VSS		AB16	VSS			
AA7	VSS		AB17	$\overline{\text{SN}}$11			
AA8	VSS		AB18	VSS			
AA9	VSS		AB19	SCK			
AA10	VSS		AB20	TESTLO_AB20			
AA11	VSS		AB21	$\overline{\text{PS}}$0			
AA12	VSS		AB22	$\overline{\text{PS}}$1			
AA13	VSS		AB23	$\overline{\text{PS}}$2			
AA14	VSS		AB24	$\overline{\text{PS}}$3			
AA15	VSS		AB25	$\overline{\text{PS}}$4			
AA16	VSS		AB26	RFU[a]			
AA17	VSS		AB27	VDDSPD			
AA18	VSS		AB28	VSS			
AA19	VSS		AC3	VSS			
AA20	VSS		AC4	PN5			
AA21	VSS		AC5	PN13			
AA22	VSS		AC6	RFU[a]			
AA23	VSS		AC7	PN12			
AA24	VSS		AC8	PN6			
AA25	VSS		AC9	PN7			
AA26	VSS		AC10	PN8			
AA27	$\overline{\text{PS}}$9		AC11	PN9			
AA28	PS9		AC12	FBDRES			
AA29	VSS		AC13	PLLTSTO			
AB2	VSS		AC14	PN10			
AB3	$\overline{\text{RESET}}$		AC15	PN11			
AB4	$\overline{\text{PN}}$5		AC16	RFU			
AB5	$\overline{\text{PN}}$13		AC17	SN11			
AB6	RFU[a]		AC18	VSS			

[a] These pin positions are reserved for forward clocks to be used in future AMB implementations.

12.3 Package Information

Refer to Registered Outline MO-261A published by JC-11 committee for AMB package info.

Standard Improvement Form **JEDEC JESD82-20**

The purpose of this form is to provide the Technical Committees of JEDEC with input from the industry regarding usage of the subject standard. Individuals or companies are invited to submit comments to JEDEC. All comments will be collected and dispersed to the appropriate committee(s).

If you can provide input, please complete this form (it can be edited in Acrobat Exchange) and return to:

JEDEC
Attn: Publications Department
2500 Wilson Blvd. Suite 220
Arlington, VA 22201-3834
Fax: 703.907.7583

1. I recommend changes to the following:

☐ Requirement, paragraph number _____

☐ Test method number _____ Paragraph number _____

The referenced paragraph number has proven to be:

☐ Unclear ☐ Too Rigid ☐ In Error

☐ Other _____

2. Recommendations for correction:

_____

_____

_____

_____

3. Other suggestions for document improvement:

_____

_____

_____

_____

Submitted by

Name: _____ Phone: _____

Company: _____ E-mail: _____

Address: _____

City/State/Zip: _____ Date: _____

Rev. 9/02

JEDEC