US005563839A

United States Patent [19]

Herdt et al.

[11] **Patent Number: 5,563,839**

[45] **Date of Patent: Oct. 8, 1996**

[54] **SEMICONDUCTOR MEMORY DEVICE HAVING A SLEEP MODE**

[75] Inventors: **Christian E. Herdt**, Monument; **Albert S. Weiner**, Colorado Springs, both of Colo.

[73] Assignee: **Simtek Corporation**, Colorado Springs, Colo.

[21] Appl. No.: **413,360**

[22] Filed: **Mar. 30, 1995**

[51] **Int. Cl.**[6] **C11C 7/00**

[52] **U.S. Cl.** **365/227**; 365/229

[58] **Field of Search** 365/226, 227, 365/228, 229

[56] **References Cited**

U.S. PATENT DOCUMENTS

4,758,945	7/1988	Remedi	364/200
4,984,211	1/1991	Tran	365/229
5,121,359	6/1992	Steele	365/229
5,262,998	11/1993	Mnich et al.	365/227
5,345,424	6/1994	Landgraf	365/227

OTHER PUBLICATIONS

Simtek Data Book, Mar. 7, 1994, pp. 1–14.

Primary Examiner—Tan T. Nguyen
Attorney, Agent, or Firm—Sheridan Ross & McIntosh

[57] **ABSTRACT**

The present invention provides a computer memory device having a sleep mode characterized by extremely low current consumption and relatively large turn on delay. The invention includes circuitry for disabling current sinking elements internal to said device in response to a sleep signal. In one embodiment, the invention includes circuitry for disconnecting the bit lines and memory cell loads of a nonvolatile static random access memory (nvSRAM) array from a source of power in response to a sleep signal. This embodiment is capable of first transferring the data stored in a volatile portion of the array to a nonvolatile portion of the array before entering sleep mode to prevent loss of the data.

30 Claims, 4 Drawing Sheets

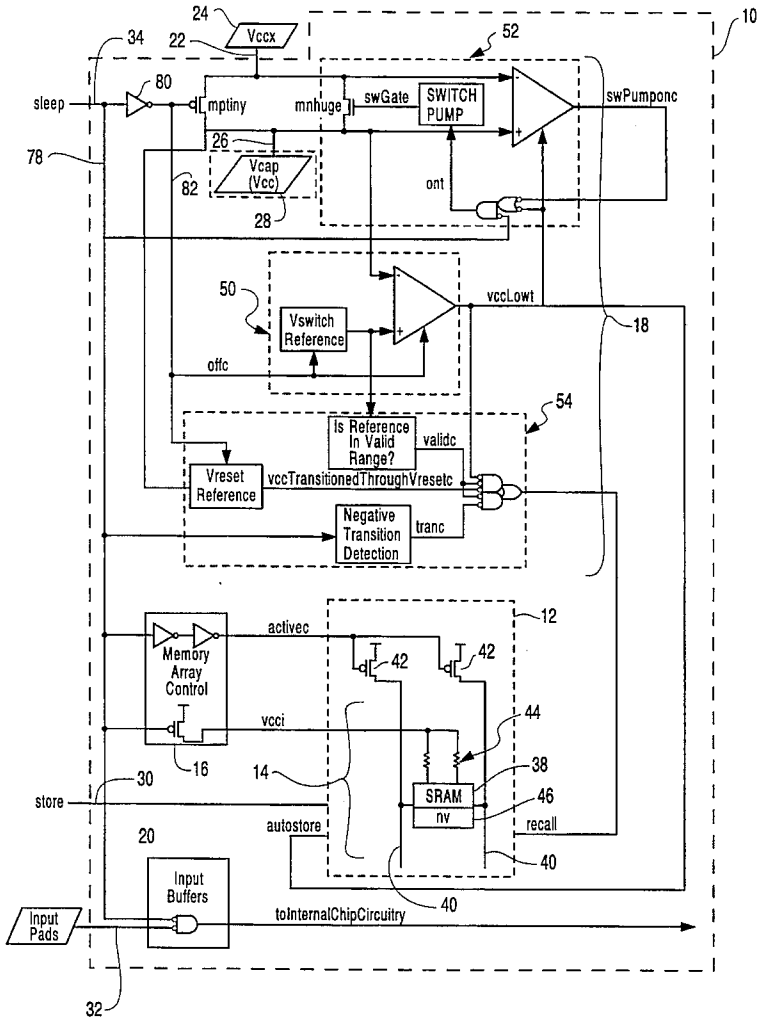

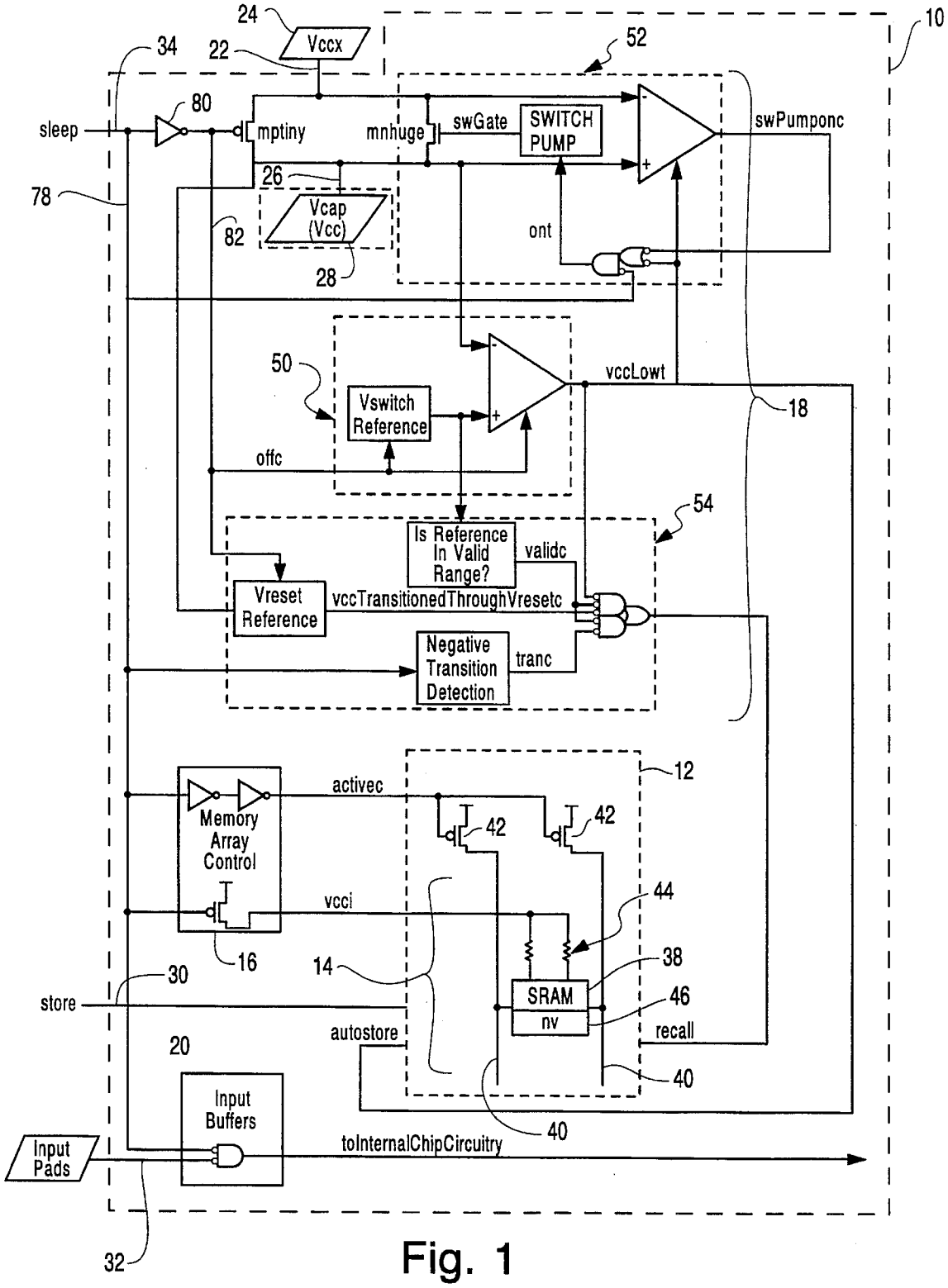
24
Vccx
22
34
52
10
80
sleep
mptiny
mnhuge
swGate
SWITCH PUMP
swPumponc
26
78
Vcap (Vcc)
82
ont
28
50
Vswitch Reference
vccLowt
18
offc
54
Is Reference In Valid Range?
validc
Vreset Reference
vccTransitionedThroughVresetc
Negative Transition Detection
tranc
12
activec
Memory Array Control
42
42
vcci
44
16
14
38
30
store
SRAM
nv
46
recall
autostore
20
40
Input Buffers
40
Input Pads
toInternalChipCircuitry
32

Fig. 1

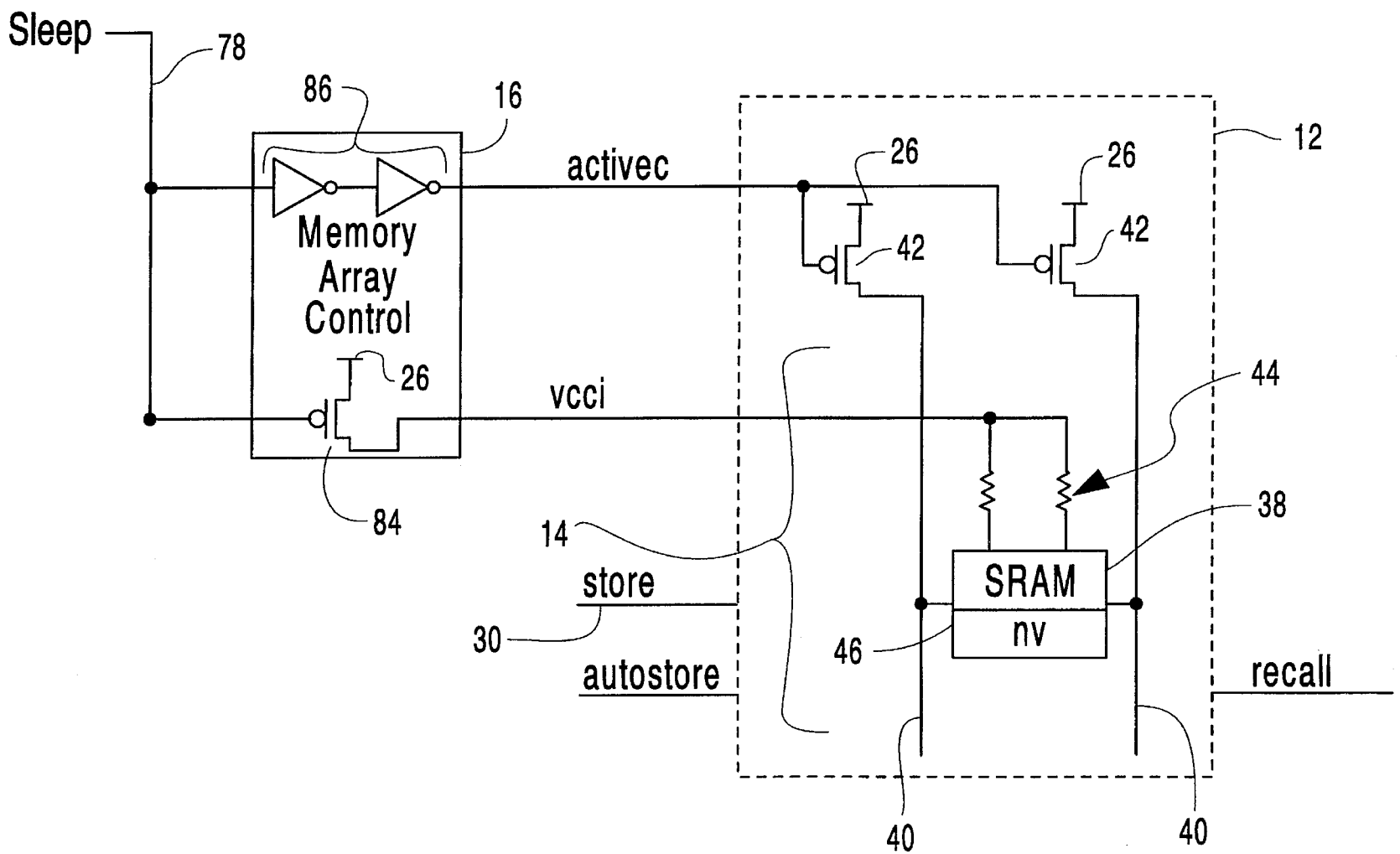
Sleep
78
86
16
Memory
Array
Control
26
84
activec
vcci
26
42
26
42
12
44
38
14
store
30
autostore
SRAM
nv
46
recall
40
40

Fig. 2

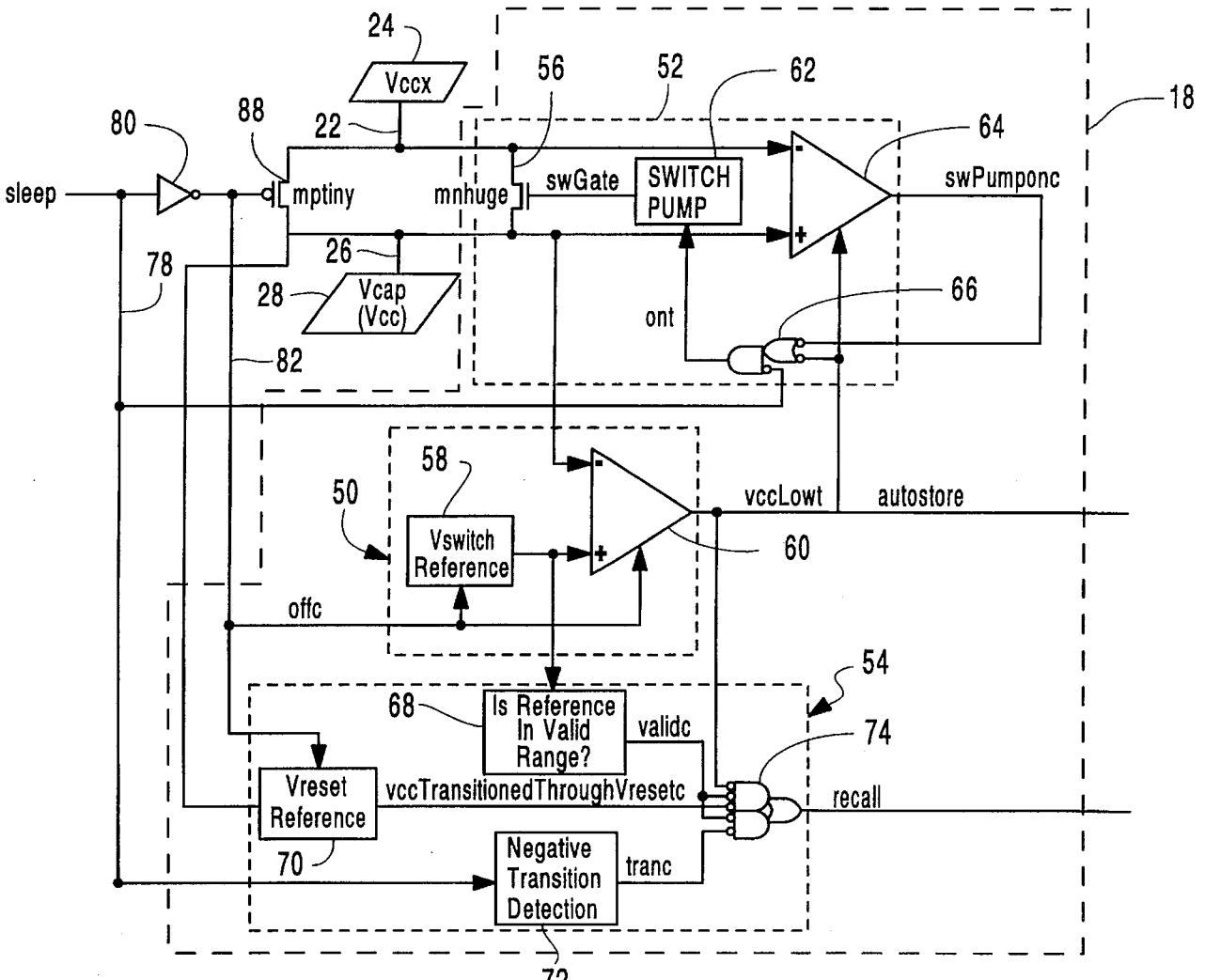
24
Vccx
56
52
62
18
80
88
22
64
sleep
mptiny
mnhuge
swGate
SWITCH PUMP
swPumponc
26
78
28
Vcap (Vcc)
66
ont
82
58
50
Vswitch Reference
vccLowt
autostore
60
offc
54
68
Is Reference In Valid Range?
validc
74
Vreset Reference
vccTransitionedThroughVresetc
recall
70
Negative Transition Detection
tranc
72

Fig. 3

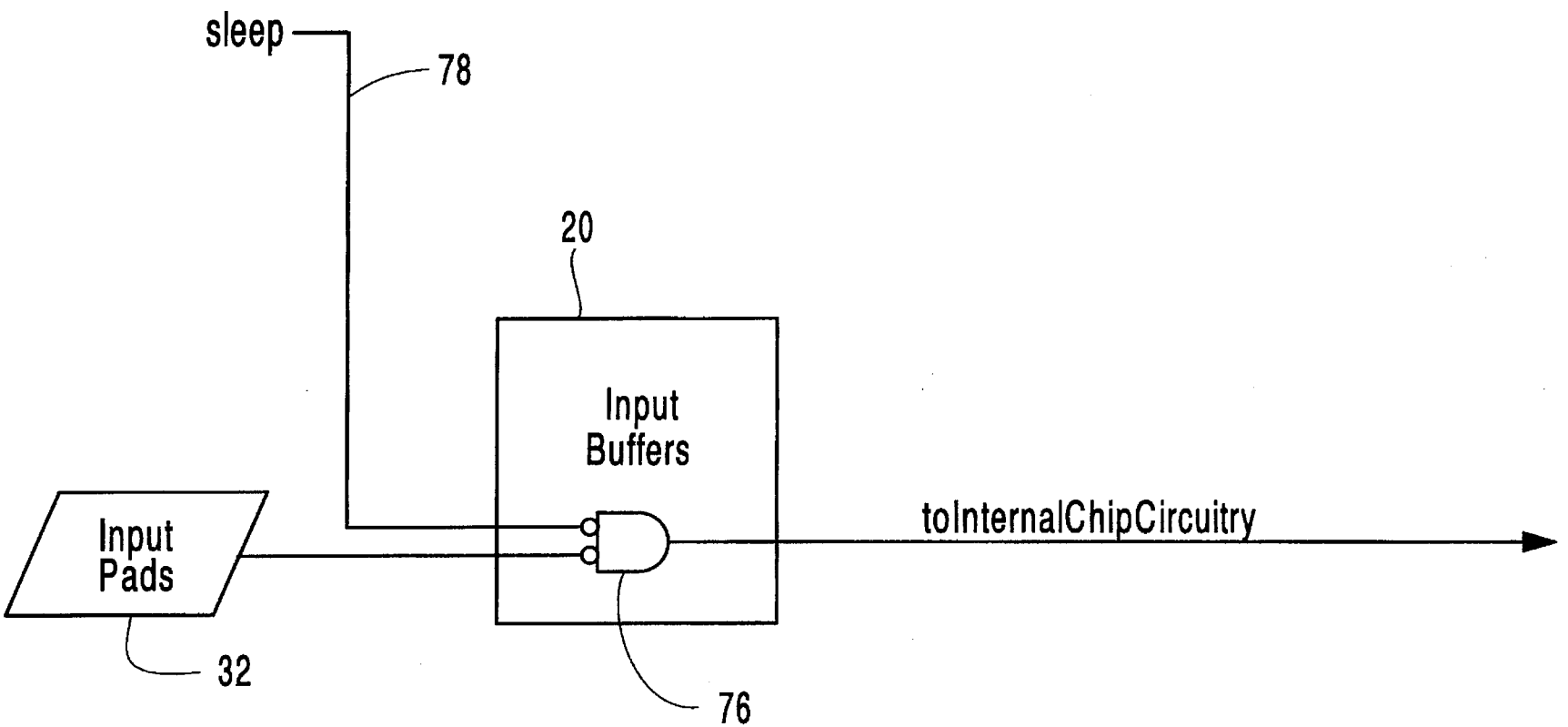
sleep
78
20
Input
Buffers
Input
Pads
toInternalChipCircuitry
32
76

Fig. 4

SEMICONDUCTOR MEMORY DEVICE HAVING A SLEEP MODE

FIELD OF THE INVENTION

The present invention relates generally to computer memory devices, and, more particularly, to computer memory devices having a low current sleep mode.

BACKGROUND OF THE INVENTION

A computer memory is a storage device that receives, retains and transmits digital information in a computer. Computer memories come in many different types which vary according to how long they can store data, how fast they are able to receive and transmit data, and how much they cost, among other things. The present invention is applicable to many different types of computer memory, such as read only memory (ROM) and random access memory (RAM), but in the preferred embodiment the invention concerns a subset of RAM known as static random access memory (SRAM).

A random access memory is generally comprised of an array of data storage locations, known as memory cells, where individual data elements, known as bits, can be retained. Each data storage location is addressable so that data from the exterior environment can be written into the data storage location, or data can be read from the data storage location and provided to the exterior environment. The time it takes to access the data in any particular storage location, i.e., at a particular address, is substantially independent of the particular address of that location, hence the name random access memory.

The word "static" in static random access memory refers to the ability of the memory to retain data without having to constantly refresh or re-write the memory cells. The opposite of this is a "dynamic" random access memory which requires constant refreshing of the memory cells to maintain the data contained therein.

An important characteristic of any computer memory device is whether the device is volatile or nonvolatile. A volatile memory device, such as an SRAM, will lose all of its stored data if the power being supplied to the device is terminated. A nonvolatile memory, in contrast, will retain its data even if power is removed. In general, nonvolatile memory devices operate much slower than volatile devices performing the same functions, and, therefore, are not generally used in applications requiring both fast read and write operations.

Memory devices exist which combine a faster volatile memory portion with a slower nonvolatile memory portion to obtain the benefits of both types of memory. These devices use the volatile memory portion during high speed operation and transfer the data stored in the volatile portion to the nonvolatile portion if there is concern that power to the nonvolatile portion will be lost. The data so transferred can later be recalled to the volatile portion when needed. Devices having these characteristics are generally called nonvolatile static random access memories (nvSRAMs).

Nonvolatile SRAMs have wide applicability in the computer industry and may be used in many different computer based products. Such memories may be used, for example, in portable laptop computers or other portable computer products. A problem which arises when these memories are used in portable computers is the sizable current drain that they create even when not in use or in a current reduction mode known as the standby mode. This current drain tends to deplete the computer's battery and results in significantly less operating time between recharges.

Therefore, a need exists for an nvSRAM device that is capable of conserving more power than nvSRAMs with standby current reduction.

SUMMARY OF THE INVENTION

The invention is concerned with a computer memory device having a low current operating mode, called a sleep mode. This mode is achieved by disabling, or turning off, current sinking elements internal to the memory device in response to a sleep signal. Among the current sinking elements disabled are elements that require more time to reach an operational state after power is applied to the memory than the normal address access time of the memory. By disabling these elements, the invention is capable of reducing the current consumed by the memory to levels that make the device particularly useful in those applications which require reduced power consumption.

In the preferred embodiment, the invention includes a nonvolatile static random access memory (nvSRAM) cell having both a static random access memory (SRAM) portion and a nonvolatile portion. Both portions are capable of retaining a digital data bit delivered to them, but the SRAM portion will lose its retained data bit if power to the cell is removed while the nonvolatile portion will not lose its retained data bit if power to the cell is removed. The nvSRAM cell is capable of transferring a bit of data from the SRAM portion to the nonvolatile portion in response to a store signal and transferring a bit of data from the nonvolatile portion to the SRAM portion in response to a recall signal.

The nvSRAM cell of the preferred embodiment has at least one memory cell load operatively connected thereto for facilitating the delivery of power to the cell. This memory cell load sinks current whenever a voltage is applied to it. To avoid this current sinking, the invention is capable of disconnecting the load from a source of power in response to a sleep signal. Because the data retained within the SRAM portion of the nvSRAM cell will be lost when the voltage is removed from the memory cell load, the preferred embodiment of the invention allows a user to deliver a store signal to the cell before entering the sleep mode. This causes a transfer of the data from the SRAM portion to the nonvolatile portion, thereby protecting the data from loss. In an alternative embodiment, the invention automatically delivers a store signal to the nvSRAM cell whenever sleep mode is entered.

The nvSRAM cell of the preferred embodiment also has at least one bit line operatively connected thereto for providing a pathway for data between the cell and the exterior environment. Any time a voltage is present on this bit line, a semiconductor junction will be reverse biased and a small leakage current to an underlying substrate will result. The invention is capable of disconnecting the bit line from a source of power in response to a sleep signal. In a preferred embodiment, the invention is capable of holding the bit line at the same voltage level as the underlying substrate in response to a sleep signal.

The preferred embodiment of the invention also includes power monitoring circuitry for monitoring the power being supplied to the device. The power monitoring circuitry is capable of creating a store signal when there is a loss of power being supplied to the device and a recall signal when

the power being supplied to the device is restored. The invention provides circuitry for deactivating, in response to a sleep signal, many of the current sinking elements internal to the power monitoring circuitry.

Lastly, the preferred embodiment of the present invention includes at least one input buffer for buffering signals being transmitted into the nvSRAM device. The input buffer is known to sink current whenever the input signal being applied to it is at an intermediate level between power supply and ground. The invention provides circuitry for disabling the input buffers in response to a sleep signal.

Based on the foregoing, the present invention is capable of significantly reducing the power consumed by the nvSRAM device whenever a sleep signal is supplied to the device from an external source.

BRIEF DESCRIPTION OF THE DRAWINGS

FIG. **1** is a schematic diagram of the present invention.

FIG. **2** is a schematic diagram of a first portion of the embodiment of the invention illustrated in FIG. **1**, including memory cells having memory cell loads and bit lines.

FIG. **3** is a schematic diagram of a second portion of the embodiment of the invention illustrated in FIG. **1**, including circuitry for initiating an automatic store operation in response to a loss of system power and an automatic recall operation in response to a restoration of said power.

FIG. **4** is a schematic diagram of a third portion of the embodiment of the invention illustrated in FIG. **1**, including input buffers for buffering data transmitted into the memory device.

DETAILED DESCRIPTION

The invention is concerned with a computer memory device having a low current operating mode, called a sleep mode. This mode is achieved by disabling, or turning off, current sinking elements internal to the memory device in response to a sleep signal. Among the current sinking elements disabled are elements that require more time to reach an operational stated after power is applied to the memory, than the normal address access time of the memory. By disabling these elements, the invention is capable of reducing the current consumed by the memory to levels below those achieved by the prior art standby mode and is particularly useful in those situations when immediate access to the memory cells is not critical.

FIG. **1** illustrates an embodiment of the invention and, more specifically, an nvSRAM device with sleep mode capability, which is hereinafter referred to as device **10**. For ease of description and to enhance understanding, FIG. **1** is broken down into three separate portions in FIGS. **2**, **3**, and **4**.

As seen in FIGS. **1–4**, device **10** includes nonvolatile static random access memory (nvSRAM) array **12** with one nvSRAM memory cell **14** thereof illustrated. To control the application of power to the array, among other things, the device includes a memory array control **16**. The device **10** further includes power monitoring circuitry **18** that operates so that if the power being provided to the device **10** is inadequate for retaining data in the SRAM portion of the array **12**, a store operation is initiated that causes the data in the SRAM portion of the array **12** to be transferred to the nonvolatile portion of the array **12**. In addition, the power monitoring circuitry **18** can initiate a recall operation that causes data previously stored in the nonvolatile portion of the array **12** to be transferred to the SRAM portion of the array **12** when the power being provided to the device **10** transitions from an inappropriate level for SRAM operation to an acceptable level for SRAM operation. The device **10** further includes input buffers **20** for use in transferring data from the exterior environment to the device **10**.

To interface the device **10** with the exterior environment, the device includes a plurality of inputs. Specifically, the device **10** includes a power input **22** for providing power from a power supply **24** to the device **10**. Backup power input **26** provides power from an external capacitor **28** that can be used, in the event the power supply **24** fails, to accomplish a store operation. A store input **30** permits a user to force a store operation to occur in the array **12**. The device also includes input pads **32** to facilitate the transfer of data, including clocks, addresses, and user input data, from the exterior environment to the input buffers **20**. A sleep input **34** is provided to permit a user to place the device in the sleep mode of operation by asserting a sleep signal.

With the foregoing general description of the device **10** in mind, it has been recognized that the array **12**, power monitoring circuitry **18** and input buffers **20** each include circuitry that, during operation of the device **10**, utilizes current to a degree that is undesirable in a number of applications. The device **10** includes circuitry that, in response to the sleep signal, reduces this undesirable current consumption by disabling circuitry in the noted portions of the device **10** that are consuming current. However, before describing the circuitry that disables the current consuming circuitry, the components and operation of the array **12**, power monitoring circuitry **18** and input buffers **20** will be described as well as the components therein that are disabled in response to the sleep signal.

As previously discussed, the array **12** includes a plurality of the cell **14**. With reference to FIG. **2**, each cell **14** includes a volatile static random access memory (SRAM) portion **38** that is capable of receiving a bit of data from an exterior environment, retaining this bit of data and transmitting this bit of data bit back to the exterior environment. The transfer of a bit of data between the SRAM portion **38** and the exterior environment is accomplished using bit lines **40**. The loads **44** are operative for supplying power to the SRAM portion **38** which, in turn, is operative for driving the bit lines **40**. Due to its volatile characteristic, the SRAM portion **38** will lose the retained bit of data whenever power is removed therefrom. The bit lines **40** and loads **44** are both significant current sinks that have time constants appreciably greater than the normal address access time of the device **10** and which are disabled during sleep mode.

Each cell **14** also includes a nonvolatile portion **46** that is connected to the SRAM portion **38** so that the data retained within the SRAM portion can be transferred to the nonvolatile portion **46** in response to a store signal that initiates a store cycle. Similarly, the data stored within the nonvolatile portion **46** can be transferred back to the SRAM portion **38** in response to a recall signal that initiates a recall cycle.

FIG. **3** illustrates the power monitoring circuitry **18** for monitoring the status of power that is being supplied to device **10**. The power monitoring circuitry **18** is capable of initiating a store cycle whenever a loss of system power is detected and a recall cycle whenever a restoration of system power is detected after a loss of power has occurred. As shown in FIG. **3**, the circuitry **18** is separated into a power down monitoring circuitry **50** for determining when there has been a loss of power that prevents reliable operation of the SRAM portion **38** of the cells **14** in the array **12** and

generating a store signal indicative thereof that causes data retained in the SRAM portion to be transferred to the nonvolatile portion using capacitor backup power; an isolation switch circuitry **52** that disconnects the device **10** from the power supply **24** in response to the signal produced by the power down monitoring circuitry **50** and connects the device **10** to the power supply **24** in response to a restoration of power; and power up monitoring circuitry **54** for determining when adequate power is present for SRAM operations and generating a signal indicative thereof that is used to initiate a recall operation. All three of these sub-circuits include current sinking elements which are disabled during sleep mode and which have time constants appreciably greater than the normal address access time of the device **10**.

As illustrated in FIG. **3**, isolation switch circuitry **52** includes a relatively large n-channel MOSFET **56** operatively connected between power supply **24** and external capacitor **28** for connecting and disconnecting device **10** from power supply **24**. An n-channel MOSFET is used to avoid the occurrence of a destructive condition known as latch-up when powering up device **10**. During normal operation, the n-channel MOSFET **56** is biased "on" creating a relatively low resistance between power supply **24** and external capacitor **28**. This allows capacitor **28** to charge up to substantially the same voltage as power supply **24**, which in the preferred embodiment is 5 volts.

With reference to FIG. **3**, power down monitoring circuitry **50** includes reference voltage source **58** and differential amplifier **60**. The negative input terminal of differential amplifier **60** is operatively connected to external capacitor **28** and the positive input terminal is operatively connected to the output of reference voltage source **58**. When enabled, reference voltage source **58** outputs a regulated reference voltage at a level somewhere between zero volts and the voltage level applied at power input **22**. When disabled, reference voltage source **58** outputs an unregulated voltage substantially equal to the voltage applied at power input **22**. In the preferred embodiment, the voltage level applied at power input **22** is 5 volts and the regulated reference voltage level is 4.2 volts.

Differential amplifier **60**, when enabled, compares the voltage across capacitor **28** to the regulated reference voltage and creates an output signal whenever the reference voltage is greater. This output signal is indicative of a loss of power from power supply **24** and is used by device **10** to initiate a store cycle. Reference voltage source **58** and differential amplifier **60** are both significant current sinks that have time constants appreciably greater than the normal address access time of the device **10** and that are disabled during sleep mode.

Isolation switch circuitry **52** monitors the output of power down monitoring circuitry **50**, and, when a signal is detected which indicates a loss of power from the power supply **24**, compares the voltage of power supply **24** to the voltage across external capacitor **28**. If the voltage across capacitor **28** is greater, the isolation switch circuitry **52** isolates device **10** from power supply **24** by turning off n-channel MOSFET **56**. Device **10** then uses the charge stored in external capacitor **28** to complete the store cycle initiated by the output signal of power down monitoring circuitry **50**. Device **10** is isolated from power supply **24** to ensure that the charge stored in capacitor **28** is not lost through an extraneous path created by the failure of supply **24**.

As illustrated in FIG. **3**, isolation switch circuitry **52** includes n-channel MOSFET **56**, switch pump **62**, differential amplifier **64**, and logic circuitry **66**. Switch pump **62** is operatively connected to the gate terminal of n-channel MOSFET **56** for applying an elevated voltage level to its gate terminal whenever a relatively low resistance is required between power supply **24** and device **10**, i.e., whenever adequate power is being delivered to device **10**. Switch pump **62** is required because the application of a logic high signal to the gate of n-channel MOSFET **56**, rather than the elevated voltage level produced by the switch pump **62**, results in a voltage drop between power supply **24** and external capacitor **28** which is undesirable. Differential amplifier **64** is operatively connected at its negative input terminal to power supply **24** and at its positive input terminal to external capacitor **28** for creating an output signal indicative of whether the capacitor voltage is greater than the supply voltage. Differential amplifier **64** is also operatively connected at an enable input to the output of power down monitoring circuitry **50**. Logic circuitry **66** is responsive to the output signal of differential amplifier **64** and the output signal of power down monitoring circuitry **50** for determining when n-channel MOSFET **56** should be turned on and off and for communicating this information to switch pump **62**.

After there has been a loss of power and device **10** has been isolated from power supply **24**, differential amplifier **64** continues to compare the voltage of power supply **24** to that across external capacitor **28**. When the power from supply **24** is restored, differential amplifier **64** outputs a signal indicative of this restoration. Logic circuitry **66** detects this signal from differential amplifier **64** and signals switch pump **62** to turn on n-channel MOSFET **56**, thereby reconnecting power supply **24** to external capacitor **28** and charging up the capacitor. The power down monitoring circuitry **50** detects that the voltage across capacitor **28** has exceeded the regulated reference voltage and produces an output signal indicative of such. Differential amplifier **64** detects this signal from the power down monitoring circuitry **50** and stops comparing the supply voltage to the capacitor voltage. Both switch pump **62** and differential amplifier **64** are current sinks that have time constants appreciably greater than the normal address access time of the device **10** and that are disabled during sleep mode.

The power up monitoring circuitry **54** is responsible for initiating recall cycles. A recall cycle is generally required when power has been restored to device **10** after a power down condition or when device **10** has emerged from a sleep cycle. To initiate a recall cycle after power has been restored to device **10**, three conditions must be met. First, power up monitoring circuitry **54** must determine whether there is a signal present at the output of power down monitoring circuitry **50**. If a signal is present, this indicates that system power has not yet been restored and therefore a recall cycle should not be initiated. Power up monitoring circuitry **54** must also determine whether the voltage across external capacitor **28** had dropped a certain predetermined amount below the reference voltage of reference voltage source **58** before power was restored. If the capacitor voltage had not dropped below that level, then the data stored within the SRAM portion **46** of the memory was not lost and a recall cycle is not required. Lastly, power up monitoring circuitry **54** must determine whether power down monitoring circuitry **50** is sufficiently stabilized before it may initiate a recall cycle.

To initiate a recall cycle after device **10** has emerged from sleep mode, three conditions must be met. First, power up monitoring circuitry **54** must determine that device **10** is no longer in sleep mode. Second, power up monitoring circuitry **54** must determine that the regulated reference voltage being

output by reference voltage source **58** has sufficiently stabilized. Third, power up monitoring circuitry **54** must determine that adequate operating power is available.

In the preferred embodiment, as illustrated in FIG. **3**, power up monitoring circuitry **54** includes stabilization circuitry **68**, voltage reset circuitry **70**, negative transition detection circuitry **72**, and logic circuitry **74**. Stabilization circuitry **68** monitors the output of reference voltage source **58** to determine whether it has stabilized within a specific voltage range. If the voltage has stabilized within the specific range, stabilization circuitry **68** outputs a signal indicative of such. Voltage reset circuitry **70** monitors the voltage across external capacitor **28** and determines whether this voltage has dropped a certain amount below the reference voltage of reference voltage source **58** before system power was restored. If the voltage had dropped the required amount, voltage reset circuitry **70** outputs a signal indicative of such. Negative transition detection circuitry **72** determines when device **10** is just leaving a sleep mode and outputs a signal indicative of such. Logic circuitry **74** is responsive to the output signals of power down monitoring circuitry **50**, voltage reset circuitry **70**, and stabilization circuitry **68** for initiating a recall cycle after power has been restored to device **10** after a power down condition. Similarly, logic circuitry **74** is responsive to the output signals of stabilization circuitry **68** and negative transition detection circuitry **72** for initiating a recall cycle after device **10** has emerged from sleep mode. Voltage reset circuitry **70** is a significant current sink that has a time constant appreciably greater than the normal address access time of the device **10** and is disabled during sleep mode.

With reference to FIG. **4**, device **10** includes one or more input buffers **20** for receiving data, such as clock signals, addresses, and user input data, from an exterior environment and transferring this data to the internal circuitry of device **10**. Input buffers are used by a memory device so that the device itself does not influence the circuit which is delivering data to the device. As seen in the figure, the invention uses a NOR gate **76** as an input buffer. NOR gate **76** has a first input operatively connected to an input pad **32** for receiving data from the exterior environment and an output for delivering the data to the internal circuitry of device **10**. The input buffers **20** are significant current sinks if the input signals being applied to them are at an intermediate level between power supply and ground and are disabled during sleep mode. The input buffers, however, have a time constant within a factor of two of the normal address access time of the device **10**.

With the foregoing description of the components and operation of the array **12**, power monitoring circuitry **18** and input buffers **20** in mind, the circuitry that disables, in response to a sleep signal, the current consuming components of the above portions will be described.

In the preferred embodiment, as illustrated in FIG. **1**, device **10** includes an active high sleep signal line **78** communicating with an exterior environment through sleep input **34**. This signal line will be logic high when device **10** is in sleep mode and logic low otherwise. Device **10** also includes inverter **80** connected at an input to active high sleep signal line **78** for providing an active low sleep signal line **82** at an output. Active low sleep signal line **82** will be logic low when device **10** is in sleep mode and logic high otherwise. The invention uses these two signal lines to disable the various current sinking elements when in sleep mode.

Memory loads **44** are known to sink current whenever a voltage is applied to them. Device **10** provides circuitry for removing the voltage from the memory cell loads **44** whenever a sleep signal is asserted. In one embodiment, as illustrated in FIG. **2**, this circuitry comprises logic gate **84** in memory array control **16** operatively connected at an output to memory loads **44** in memory array **12** and responsive to active high sleep signal line **78** connected at an input for disconnecting the memory loads **44** from a source of power **26** whenever a sleep signal is asserted. It should be appreciated that logic gate **84** can include any means for terminating the application of a voltage to the loads **44** in response to a sleep signal and is not limited to the specific means illustrated in FIG. **2**. In another embodiment, the memory loads **44** are held at substantially the same voltage as the underlying substrate in response to a sleep signal.

Whenever the voltage being supplied to the memory loads **44** is terminated, any data stored in the SRAM portion **38** of the cell **14** will be lost. To prevent this loss from occurring, the preferred embodiment of the present invention allows a user to initiate a store cycle, using store input **30**, before entering sleep mode. In an alternative embodiment, the store cycle may be initiated automatically by device **10** whenever a sleep signal is asserted on active high sleep signal line **78**.

Bit lines **40** are used by device **10** to carry data bits between SRAM portion **38** and the exterior environment. When a voltage that is different from the voltage of the underlying substrate is present on one of these bit lines, a semiconductor junction is reverse biased and a small leakage current to the underlying substrate will result. This leakage current is generally negligible if only one or a few bit lines are involved, but can represent a significant current sink for memories having larger arrays. Device **10** provides circuitry for significantly reducing the difference between the voltage on the bit lines and the voltage on the underlying substrate in response to a sleep signal. This effectively eliminates the reverse junction leakage current during sleep mode. In one embodiment, as illustrated in FIG. **2**, the circuitry comprises logic gates **86** in memory array control **16** having an output operatively connected to the gate terminals of bit line bias transistors **42** located within memory array **12**. During normal operation, the bit line bias transistors **42** are biased "ON", thereby resistively connecting the bit lines **40** to a source of power **26**. During sleep mode, the bit line bias transistors **42** are turned "OFF", thereby isolating the bit lines **40** from the source of power **26** and allowing a "zero junction bias" condition to develop at the corresponding semiconductor junctions. In a preferred embodiment, the bit lines **40** are held at the same voltage level as the underlying substrate in response to a sleep signal which also creates a "zero junction bias" condition at the corresponding semiconductor junctions.

Device **10** provides circuitry for disabling the entire power down monitoring circuitry **50** in response to a sleep signal. This is accomplished by connecting the active low sleep signal line **82** to the enable inputs of both reference voltage source **58** and differential amplifier **60**. This arrangement causes the application of a logic low signal to the enable inputs whenever device **10** is in sleep mode, thereby disabling the two current sinking elements.

Device **10** also includes circuitry for disabling the entire isolation switch circuitry **52** in response to a sleep signal. As illustrated in FIG. **3**, logic circuitry **66** is connected at an enable input port to active high sleep signal line **78** for disabling this circuitry whenever a sleep signal is asserted. When logic circuitry **66** is disabled, a logic low signal is output to switch pump **62** disabling it. When switch pump **62** is disabled, n-channel MOSFET **56** will be turned off. Differential amplifier **64** is connected at an enable input to

the output of power down monitoring circuitry **50**. Because power down monitoring circuitry **50** is disabled during sleep mode, its output signal will be low and will thereby disable differential amplifier **64**.

Because n-channel MOSFET **56** is turned off during sleep mode to eliminate the current sink created by switch pump **62**, a device is provided for maintaining the connection of device **10** to power supply **24** during sleep mode. The preferred embodiment of the present invention includes p-channel MOSFET **88** to accomplish this task. P-channel MOSFET **88** is connected with its drain and source terminals between power supply **24** and external capacitor **28**. The gate terminal of p-channel MOSFET **88** is connected to active low sleep signal line **82**. As a result, p-channel MOSFET **88** will only be turned on when device **10** is in sleep mode. Because the amount of current p-channel MOSFET **88** will be required to conduct during sleep mode is small compared to the current drawn during the active and standby modes, the transistor can be relatively small and the threat of latch-up occurring is greatly abated. Current limiting means, such as a resistor, may also be provided in series with the drain or source terminal of p-channel MOSFET **88** to further limit the current through the device during power up to reduce the risk of latch-up.

In addition, device **10** includes circuitry for disabling certain current sinking elements of power up monitoring circuitry **54** in response to a sleep signal. The active low sleep signal line **82** is connected to an enable input of voltage reset circuitry **70** for disabling this circuitry whenever device **10** is in sleep mode. Also, logic circuitry **74** will be disabled whenever device **10** is in sleep mode because reference voltage source **58** will be disabled and its output voltage will not be stabilized within the proper range required by stabilization circuitry **68**. Stabilization circuitry **68** will output a signal indicative of this condition which will disable logic circuitry **74**. In the preferred embodiment of the present invention, stabilization circuitry **68** and negative transition detection circuitry **72** will not be disabled during sleep mode because they are designed to avoid sinking current whenever their inputs are disabled.

Device **10** also includes circuitry for disabling the input buffers **20**. As illustrated in FIG. **4**, the input buffers **20** are comprised of at least one NOR gate **76** having a first and second input and an output. The first input of NOR gate **76** is operative for receiving data from an exterior environment, while the second input is responsive to active high sleep signal line **78** operatively connected thereto. The output of NOR gate **76** is operatively connected to circuitry internal to device **10** for delivering the data received by the first input to the internal circuitry whenever NOR gate **76** is enabled. The NOR gate **76** will be disabled, and therefore will not deliver data to the internal circuitry, whenever a sleep signal is asserted on active high sleep signal line **78**. Once the NOR gate **76** is disabled, it will not sink current even when the voltage applied at its first input is at an intermediate state between logic high and logic low.

The operation of the preferred embodiment of the present invention will now be described. In general, device **10** has three distinct modes of operation; namely, normal operating mode, sleep mode, and power down mode. Normal operating mode is the mode during which SRAM portion **38** is capable of performing all of its designed functions, including reading and writing data to and from an exterior environment and executing store and recall cycles. During this mode, adequate power is being supplied to device **10** and active high sleep signal line **78** is logic low. As previously discussed, sleep mode is entered by applying a logic high signal to sleep input **34** which results in the disabling of current sinking elements internal to device **10**. Sleep mode should only be entered from normal operating mode. Power down mode is entered whenever the power being supplied to device **10** is terminated or sufficiently reduced. Power down mode can only be entered from the normal operating mode because the circuitry which triggers this mode is disabled during sleep mode. The operation of device **10** during power down mode was discussed previously.

During normal operating mode, active high sleep signal line **78** will be logic low indicating that device **10** is not in sleep mode. N-channel MOSFET **56** will be biased on, providing a relatively low resistance between power supply **24** and external capacitor **28**. External capacitor **28** will be charged up to a voltage approximately equal to the voltage of supply **24**, which in the preferred embodiment is 5 volts. Power down monitoring circuitry **50** will be enabled by active low sleep signal line **82** and will compare the voltage across capacitor **28** to the voltage of reference voltage source **58** which in the preferred embodiment is 4.2 volts. Because the capacitor voltage is greater, power down monitoring circuitry **50** will output a logic low signal, thereby disabling differential amplifier **64** in FIG. **3**. Logic circuitry **66** will be enabled by active high sleep signal line **78** and will signal switch pump **62** to keep n-channel MOSFET **56** biased on as long as the output of power down monitoring circuitry **50** is logic low.

During normal operating mode, memory loads **44** will be connected to power source **26**. Similarly, the bit lines **40** will be connected to power source **26**. Memory cell **14** will be fully capable during this mode of reading and writing data to and from an exterior environment over the bit lines **40**. Also during normal operating model active high sleep signal line **78** will enable the input buffers **20** to pass data from the exterior environment into device **10**.

While in normal operating mode, a user may decide to place device **10** into sleep mode to cut down on current consumption. A user will normally make this decision after a period of inactivity on the part of device **10** and in anticipation of further inactivity in the near future. When a user desires to place device **10** into sleep mode, he simply applies a logic high signal to active high sleep signal line **78** through exterior sleep input **34**. If the user wants to protect the data stored in the SRAM portion **38** of the memory before entering sleep mode, he must first deliver a store signal to device **10** through exterior store input **30**. Device **10** will then transfer the data from the SRAM portion **38** to the nonvolatile portion **46** before entering sleep mode.

Once the device is placed in sleep mode, the various current sinking elements will be disabled by the signals on sleep lines **78** and **82**. Power down monitoring circuitry **50** will be disabled and will have an output voltage of zero. This output voltage will disable differential amplifier **64** of isolation switch circuitry **52**. Logic circuitry **66** will be disabled, which in turn disables switch pump **62** and turns off n-channel MOSFET **56**. P-channel MOSFET **88** will be turned on by active low sleep signal line **82**, providing a continuous supply of power to device **10** during sleep mode. Voltage reset circuitry **70** is disabled as well as logic circuitry **74** in the power up monitoring circuitry **54**. Because all of these current sinking elements are disabled, device **10** will not be able to monitor system power, initiate a store cycle on power down, or initiate a recall cycle on power up during sleep mode.

As a result of the signal on active high sleep signal line **78** becoming logic high, logic gate **84** in FIG. **2** will disconnect

the memory cell loads **44** from a source of power **26**. Because of this, all data stored in the SRAM portion **38** of device **10** will be lost and the SRAM portion **38** will not be able to read and write to and from an exterior environment during sleep mode. The SRAM data will be retained in nonvolatile portion **46**, however, as long as a store cycle was completed prior to entering sleep mode.

Also as a result of the signal on active high sleep signal line **78** becoming logic high, the bit line bias transistors **42** will disconnect the bit lines **40** from the source of power **26**. These bit lines are not needed during sleep mode because no data will be flowing into or out of memory cell **14** during this time.

Lastly, input buffers **20** will be disabled in response to the signal on sleep signal line **78**. These buffers are not needed during sleep mode because no data will be coming into device **10** during this time.

When a user wants to leave the sleep mode, he simply applies a logic low signal to active high sleep signal line **78** through exterior sleep input **34**. This will reactivate all of the disabled elements, and, after a turn on delay period, allow the device to again be used to read and write to and from the exterior environment. Power up monitoring circuitry **54** will automatically initiate a recall cycle once the logic low signal is applied to active high sleep signal line **78**, the output voltage of reference voltage source **58** has stabilized, and power being delivered to device **10** is adequate. After the recall cycle is completed, device **10** is once again in normal operating mode. The time it takes for device **10** to be ready to read and write data after sleep mode is terminated will be appreciably longer than the normal address access time of the device **10**, which in the preferred embodiment is **25** nanoseconds.

It should be appreciated that the present invention is not limited to use with nvSRAMS and is applicable to other types of memory devices, such as ROMs and other types of RAMs. It should also be appreciated that certain alternatives exist which are considered to be within the purview of the present invention. One such alternative uses software to place device **10** into sleep mode by delivering a predetermined sequence of addresses to device **10**. Device **10** recognizes the sequence and enters sleep mode accordingly. Sleep mode is terminated by applying a signal to a reset pin. Another alternative takes a modular approach by using a general purpose instruction bus to instruct device **10** to enter sleep mode. The bus is capable of delivering a plurality of instructions to device **10**, including an instruction to enter sleep mode. The instruction on the bus is decoded by the different individual circuits within device **10** which enters sleep mode whenever the sleep instruction is received.

Although the present invention has been described in conjunction with its preferred embodiment, it is to be understood that modifications and variations may be resorted to without departing from the spirit and scope of the invention as those skilled in the art readily understand. Such modifications and variations are considered to be within the purview and scope of the invention and the appended claims.

What is claimed is:

1. A nonvolatile static random access memory (nvSRAM) device having a sleep mode, comprising:

a nonvolatile static random access memory cell, having:

a static random access memory (SRAM) portion which will lose any data located therein if power is removed; and

a nonvolatile portion which will retain any data located therein if power is removed;

wherein said nonvolatile portion is operatively connected to said SRAM portion for transferring a bit of data from said SRAM portion to said nonvolatile portion in response to a store signal and for transferring a bit of data from said nonvolatile portion to said SRAM portion in response to a recall signal;

means for monitoring power being provided to the device and for generating a store signal upon detecting a loss of power and a recall signal upon detecting a restoration of power, wherein said means for monitoring power includes circuitry that consumes power; and

means, in response to a sleep signal, for disabling at least a portion of said circuitry in said means for monitoring power to reduce power consumption.

2. A nonvolatile static random access memory device, as claimed in claim **1**, wherein:

said means for monitoring power includes means for determining whether there has been a loss of power and generating said store signal when there has been a loss of power, wherein said means for determining consumes power; and

said means for disabling includes means for reducing the power consumed by said means for determining.

3. A nonvolatile static random access memory device, as claimed in claim **2**, wherein:

said means for determining includes a first differential amplifier for comparing the voltage provided by a reference voltage source to a voltage being provided to the device, wherein at least one of said first differential amplifier and said reference voltage source consumes power; and

wherein said means for disabling includes means for reducing the power consumed by at least one of the following: said reference voltage source and said first differential amplifier in response to said sleep signal.

4. A nonvolatile static random access memory device, as claimed in claim **1**, wherein:

said means for monitoring power includes means for isolating the device from an external power supply if there is a loss of system power, wherein said means for isolating consumes power; and

said means for disabling includes means for reducing the power consumed by said means for isolating.

5. A nonvolatile static random access memory device, as claimed in claim **4**, wherein:

said means for isolating includes:

a MOSFET for selectively connecting the device to an external power supply and disconnecting the device from an external power supply whenever there is a loss of power; and

switch pump means, operatively connected to a gate terminal of said MOSFET, for increasing in magnitude the voltage provided to said gate terminal of said MOSFET when the device is connected to the external power supply, wherein said switch pump means consumes power;

wherein said means for disabling includes means for reducing the power consumed by said switch pump.

6. A nonvolatile static random access memory device, as claimed in claim **5**, wherein:

said means for isolating includes a second differential amplifier for detecting whether power has been restored, after there has been a loss of power, and for turning on said MOSFET in response to said restoration, wherein said second differential amplifier consumes power; and

said means for disabling includes means for reducing the power consumed by said second differential amplifier.

7. A nonvolatile static random access memory device, as claimed in claim 1, wherein:

said means for monitoring power includes means for determining whether power is adequate for operation of said SRAM portion after there has been an absence of power and for generating a recall signal, wherein said means for determining consumes power; and

said means for disabling includes means for reducing the power consumed by said means for determining whether power is adequate.

8. A nonvolatile static random access memory device, as claimed in claim 7, wherein:

said means for determining whether power is adequate includes circuitry for determining whether the voltage across an input capacitor has dropped a specified amount below a reference voltage, wherein said circuitry for determining consumes power; and

said means for disabling includes means for reducing the power consumed by said circuitry for determining.

9. A nonvolatile static random access memory device, as claimed in claim 8, wherein:

said means for determining further includes circuitry for determining whether a reference voltage source has stabilized at its proper output operating level;

wherein said means for determining creates said recall signal whenever said reference voltage source has stabilized, said capacitor voltage has dropped said specified amount below said reference voltage, and said power is adequate for operation of said SRAM portion.

10. A nonvolatile static random access memory device, as claimed in claim 9, wherein:

said means for determining further includes circuitry for detecting the termination of said sleep signal;

wherein said means for determining will create a recall signal whenever termination of said sleep signal is detected, said reference voltage source has stabilized and said power is adequate for operation of said SRAM portion.

11. A nonvolatile static random access memory device, as claimed in claim 1, further comprising:

a p-channel MOSFET for selectively connecting and disconnecting the device and an external power supply, said p-channel MOSFET including a gate terminal that, in response to said sleep signal, connects the device and the external power supply.

12. A nonvolatile static random access memory device, as claimed in claim 11, further comprising:

current limiting means, connected in series with said p-channel MOSFET, for limiting the current through said p-channel MOSFET during power up.

13. A nonvolatile static random access memory device, as claimed in claim 12, wherein:

said current limiting means includes a resistor.

14. A nonvolatile static random access memory device having a sleep mode, comprising:

a nonvolatile static random access memory cell, having:

a static random access memory (SRAM) portion that is capable of receiving a bit of data from an exterior environment, retaining said bit of data, and transmitting said bit of data back to said exterior environment, wherein a bit of data will not be retained if power is removed; and

a nonvolatile portion operatively connected to said SRAM portion for transferring a bit of data from said SRAM portion to said nonvolatile portion in response to a store signal and transferring a bit of data from said nonvolatile portion to said SRAM portion in response to a recall signal, wherein a bit of data retained in said nonvolatile portion will be retained if power is removed;

means for facilitating at least one of receiving, transmitting, storing and recalling data, said means for facilitating consuming power and having a relatively high time constant; and

means, in response to a sleep signal, for disabling said means for facilitating to reduce power consumption.

15. A nonvolatile static random access memory device, as claimed in claim 14, wherein:

said means for facilitating includes a memory load that is operatively connected to said nonvolatile static random access memory cell; and

said means for disabling includes means for disconnecting said memory load from a source of power in response to said sleep signal.

16. A nonvolatile static random access memory device, as claimed in claim 14, wherein:

said means for facilitating includes a memory load that is operatively connected to said nonvolatile static random access memory cell; and

said means for disabling includes means for holding said memory load at substantially the same voltage as an underlying substrate in response to a sleep signal.

17. A nonvolatile static random access memory device, as claimed in claim 14, wherein:

said means for facilitating includes a bit line that is operatively connected to said nonvolatile static random access memory cell and that provides a pathway for transmitting and receiving data between said SRAM portion and the exterior environment; and

said means for disabling includes means for disconnecting said bit line from a source of power in response to said sleep signal.

18. A nonvolatile static random access memory device, as claimed in claim 14, wherein:

said means for facilitating includes a bit line that is operatively connected to said nonvolatile static random access memory cell and that provides a pathway for transmitting and receiving data between said SRAM portion and the exterior environment; and

said means for disabling includes means for holding said bit line at substantially the same voltage as an underlying substrate in response to a sleep signal.

19. A nonvolatile static random access memory device, as claimed in claim 14, wherein:

said means for facilitating includes power monitoring circuitry for monitoring whether there has been a loss of power to the device, and generating a store signal indicative of said loss of power.

20. A nonvolatile static random access memory device, as claimed in claim 14, wherein:

said means for facilitating includes isolation switch circuitry for isolating the device from an external power supply whenever there is a loss of power.

21. A nonvolatile static random access memory device, as claimed in claim 14, wherein:

said means for facilitating includes power up detection circuitry for determining whether system power has been restored after an absence of power and for generating a recall signal whenever restoration of system power is detected.

22. A nonvolatile static random access memory device having a sleep mode, comprising:

a nonvolatile static random access memory (nvSRAM) cell having:

a static random access memory (SRAM) portion for receiving a bit of data from an exterior environment, retaining said bit of data, and transmitting said bit of data back to said exterior environment, wherein a retained bit of data will be lost if power is removed; and

a nonvolatile portion operatively connected to said SRAM portion for transferring a bit of data from said SRAM portion to said nonvolatile portion in response to a store signal and for transferring a bit of data from said nonvolatile portion to said SRAM portion in response to a recall signal, wherein a bit of data retained in said nonvolatile portion will not be lost if power is removed;

input buffer means for receiving data from said exterior environment and for sending said data to circuitry internal to said nvSRAM device, wherein said input buffer means consumes power; and

means, in response to a sleep signal, for disabling said input buffer means to reduce power consumption.

23. A nonvolatile static random access memory device, as claimed in claim 22, wherein:

said data includes addresses, clock signals, and user input data.

24. A nonvolatile static random access memory device, as claimed in claim 22, wherein:

said means for disabling comprises a NOR gate with one input responsive to said sleep signal so that said NOR gate is disabled when said sleep signal is present.

25. A semiconductor memory device having a sleep mode, comprising:

a memory capable of retaining a bit of data and transmitting said bit of data to an exterior environment, wherein said memory consumes power during a standby mode;

wherein said memory includes at least one bit line which consumes power through undesirable junction leakage whenever the voltage on said bit line is substantially different from the voltage on an underlying substrate; and

means for reducing, relative to said standby mode, the power consumed by said memory in response to a sleep signal;

wherein said means for reducing power consumption includes means for holding said bit line at substantially the same voltage as said underlying substrate in response to said sleep signal.

26. A semiconductor memory device having a sleep mode, comprising:

a memory capable of retaining a bit of data and transmitting said bit of data to an exterior environment, wherein said memory consumes power during a standby mode;

wherein said memory includes at least one bit line which consumes power through undesirable junction leakage whenever the voltage on said bit line is substantially different from the voltage on an underlying substrate; and

means for reducing, relative to said standby mode, the power consumed by said memory in response to a sleep signal;

wherein said means for reducing power consumption includes means for disconnecting said bit line from a source of power in response to said sleep signal.

27. A semiconductor memory device having a sleep mode, comprising:

a memory capable of retaining a bit of data and transmitting said bit of data to an exterior environment, wherein said memory consumes power during a standby mode;

wherein said memory includes at least one memory load which consumes power whenever a voltage drop exists across it; and

means for reducing, relative to said standby mode, the power consumed by said memory in response to a sleep signal;

wherein said means for reducing power consumption includes means for holding said memory load at substantially the same voltage as said underlying substrate in response to said sleep signal.

28. A semiconductor memory device having a sleep mode, comprising:

a memory capable of retaining a bit of data and transmitting said bit of data to an exterior environment, wherein said memory consumes power during a standby mode;

wherein said memory includes at least one memory load which consumes power whenever a voltage drop exists across it; and

means for reducing, relative to said standby mode, the power consumed by said memory in response to a sleep signal;

wherein said means for reducing power consumption includes means for disconnecting said memory load from a source of power in response to said sleep signal.

29. A semiconductor memory device having a sleep mode, comprising:

a memory capable of retaining a bit of data and transmitting said bit of data to an exterior environment, wherein said memory consumes power during a standby mode;

wherein said memory includes at least one input buffer which consumes power whenever an input voltage at an intermediate level between power supply and ground is applied to said at least one input buffer; and

means for reducing, relative to said standby mode, the power consumed by said memory in response to a sleep signal;

wherein said means for reducing power consumption includes means for disabling said input buffer in response to said sleep signal.

30. A nonvolatile static random access memory (nvSRAM) device having a sleep mode, comprising:

a nonvolatile static random access memory cell, having:

a static random access memory (SRAM) portion which will lose any data located therein if power is removed; and

a nonvolatile portion which will retain any data located therein if power is removed;

wherein said nonvolatile portion is operatively connected to said SRAM portion for transferring a bit of data from said SRAM portion to said nonvolatile portion in response to a store signal and for transferring a bit of data from said nonvolatile portion to said SRAM portion in response to a recall signal;

means for determining whether there has been a loss of power and generating said store signal when there has been a loss of power, wherein said means for determining whether there has been a loss of power consumes power;

means for isolating the device from an external power supply if there is a loss of system power, wherein said means for isolating consumes power;

means for determining whether power is adequate for operation of said SRAM portion after there has been an absence of power and for generating a recall signal, wherein said means for determining whether power is adequate consumes power;

a memory load operatively connected to said nonvolatile static random access memory cell, wherein said memory load consumes power;

a bit line operatively connected to said nonvolatile static random access memory cell and that provides a pathway for transmitting and receiving data between said SRAM portion and the exterior environment, wherein said bit line consumes power;

input buffer means for receiving data from an exterior environment and for sending said data to circuitry internal to said nvSRAM device, wherein said input buffer means consumes power; and

means, in response to a sleep signal, for deactivating said means for determining whether there has been a loss of power, said means for isolating, said means for determining whether power is adequate, said memory load, said bit line and said input buffer means to reduce power consumption.

* * * * *