JOHN D. LENK

SIMPLIFIED DESIGN OF SWITCHING POWER SUPPLIES

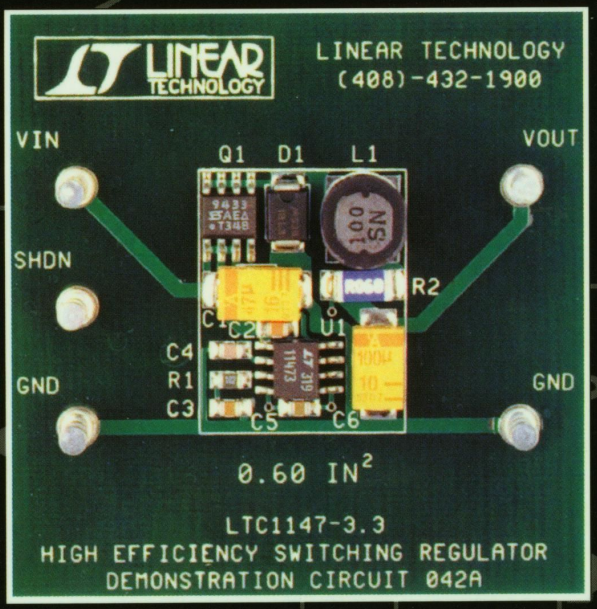

EDN® SERIES FOR DESIGN ENGINEERS

Petitioners
Ex. 1058, p. Cover

Simplified Design of Switching Power Supplies

John D. Lenk

Butterworth-Heinemann
Boston Oxford Melbourne Singapore Toronto Munich New Delhi Tokyo

Petitioners
Ex. 1058, p. 1

Cover photograph courtesy of Linear Technology Corporation.

Copyright © 1995 by Butterworth-Heinemann

A member of the Reed Elsevier group

All rights reserved.

No part of this publication may be reproduced, stored in a retrieval system, or transmitted, in any form or by any means, electronic, mechanical, photocopying, recording, or otherwise, without the prior written permission of the publisher.

Recognizing the importance of preserving what has been written, it is the policy of Butterworth-Heinemann to have the books it publishes printed on acid-free paper, and we exert our best efforts to that end.

Library of Congress Cataloging-in-Publication Data

Lenk, John D.
Simplified design of switching power supplies / by John D. Lenk.
p. cm.
Includes bibliographical references and index.
ISBN 0-7506-9507-2 (hardcover)
ISBN 0-7506-9821-7 (paperback)
1. Electronic apparatus and appliances—Power supply—Design and construction. 2. Switching power supplies—Design and construction. I. Title.
TK7868.P6L456 1995
621.381'044—dc20 94-32727
CIP

British Library Cataloguing-in-Publication Data

A catalogue record for this book is available from the British Library.

The publisher offers special discounts on bulk orders of this book.
For information, please contact:

Manager of Special Sales
Butterworth–Heinemann
313 Washington Street
Newton, MA 02158–1626
Tel: 617-928-2500
Fax: 617-928-2620

For information on all electronics publications available, contact our World Wide Web home page at: http://www.bh.com/bh/

10 9 8 7 6 5 4 3

Transferred to digital printing 2005

1.1.4 Transistor and Diode Characteristics

Switching regulators must use transistors with a gain-bandwidth product (fT) of at least 4 MHz to operate efficiently (an fT of 30 MHz is even better). Darlington transistors and MOSFETs are also used in switching regulators.

A fast-recovery rectifier, or a Schottky barrier diode, is used as a free-wheeling clamp diode to keep the switching-transistor load line within safe operating limits and to increase efficiency. Other solid-state devices used in some switching regulators include gates, flip-flops (FFs), op-amp comparators, timers, and rectifiers.

1.2 Typical Switching-Regulator Circuits

Figure 1–2 shows four typical PNP/NPN switching-regulator circuits. All of the circuits have the following common elements: switching transistor, clamp diode, LC filter, and a logic or control block. None of the circuits provide full isolation between the line and load, as would be the case if more than one series transistor is used. However, the one-transistor design is the simplest and most economical.

It is usually desirable to have at least one line in common with the input and output to reduce ground loops. The one-line approach also determines whether the output voltage is considered positive or negative. However, most circuits can operate from either supply because the input and output grounds are usually isolated. The one-transistor, one-line approach is the most popular switching-regulator design.

In the circuits of Figs. 1–2(a) and 1–2(b), the logic or control operates from the load voltage. Such circuits are not self-starting, and provisions must be made to operate from the line during start-up (and in the event of short circuits).

In the circuits of Figs. 1–2(c) and 1–2(d), the logic operates continuously from the line and is isolated from the load voltage. The sense and feedback elements must be electrically isolated (sometimes with an optocoupler).

The circuits of Figs. 1–2(b) and 1–2(d) are generally used in line-operated supplies because economical high-voltage NPN transistors are available whereas PNP types are not. Of the two, the circuit of Fig. 1–2(d) is most popular, because the logic is tied directly to the series switch and switching is more efficient. Driver transformers are used in some designs to interface between the logic and switching transistors. In such a case, the switching transistor may be either PNP or NPN.

Figure 1–3 shows three typical MOSFET switching-regulator (or -converter) circuits, representing the three basic configurations: *buck, boost,* and *buck-boost* (all of which are described more fully in Section 1.5). In brief, each of the three configurations meets a particular need. When output voltage is greater than the input, the converter is usually operated in the positive *voltage-boost* circuit (also known as a *step-up* converter). The buck circuit is used when the input voltage is always greater than the desired output voltage (and is also known as a *step-down* converter). The

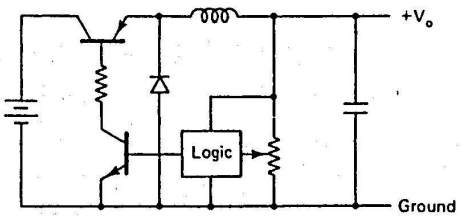

(a) Positive output, common logic and load

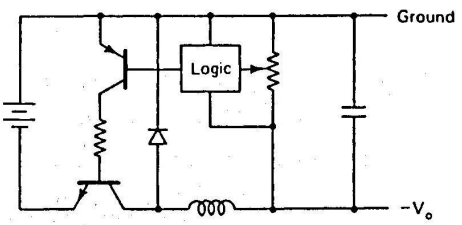

(b) Negative output, common logic and load

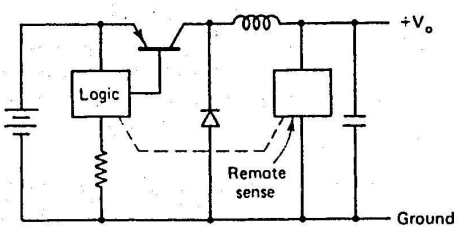

(c) Positive output, isolated logic and load

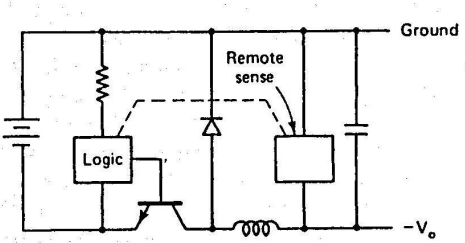

(d) Negative output, isolated logic and load

Figure 1-2. Four typical switching-regulator circuits

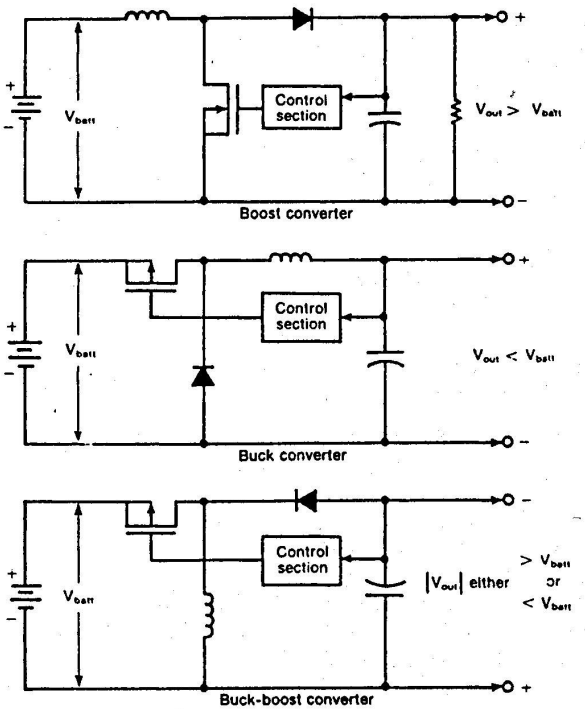

Figure 1–3. Three typical MOSFET switching-regulator circuits (*Maxim Seminar Applications Book,* 1989, p. 115)

buck-boost circuit *inverts* the input voltage and can be used with an input voltage that is either greater or less than the desired output. For this reason, the buck-boost circuit is sometimes called an *inverter.*

1.3 Switching-Regulator Theory

Figure 1–4 shows a theoretical switching-regulator circuit (buck configuration) and the related waveforms. The high efficiency of switching regulators is the result of operating the series transistor in a switching mode. When the transistor is switched on, the full input voltage is applied to the LC filter. When the transistor is switched off, the input voltage is zero. With the transistor turned on and off for equal amounts of time (50% duty cycle) the DC load voltage is half the input voltage. The output voltage V_O is always equal to the input voltage V_{IN}, times the duty cycle D, or $V_O = DV_{IN}$.

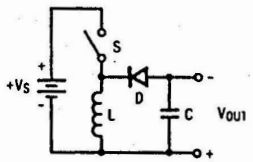

Figure 1–9. Theoretical buck-boost or inverting configuration (*Raytheon Linear Integrated Circuits*, 1989, p. 9-54)

The following paragraphs describe how both theoretical and practical functions are performed and how the practical functions (Fig. 1–10) relate to the theoretical (Fig. 1–9). Notice that switch S in the theoretical circuit is replaced by transistor Q_1 in the practical IC circuit. Capacitor C, diode D, and inductor L in Fig. 1–9 are replaced by C_F, D_1, and L_X in Fig. 1–10.

As shown in Fig. 1–9, when switch S is closed, charging current from the battery flows through inductor L, which builds up a magnetic field that increases as S is held closed. When S is opened, the magnetic field collapses, and energy stored in the magnetic field is converted into a current that flows through L in the same direction as the charging current. Because there is no path for this current to flow through the switch, the current must flow through diode D to charge capacitor C. The key to inversion is the ability of the inductor to become a source when the charging current is removed.

In the practical circuit of Fig. 1–10, the feedback circuit and the output capacitor decrease the output voltage across the inductor to a regulated fixed value. When power is first applied, the ground-sensing comparator (pin 8) compares the output voltage to the +1.25-V reference. Because C_F is initially discharged, a positive voltage is applied to the comparator, and the output of this comparator gates the square-wave oscillator. The gated square-wave signal turns the switch transistor Q_1 on and off.

The turning on and off of the switch transistor Q_1 performs the same function as opening and closing of the switch (S in Fig. 1–9). That is, energy is stored in the inductor during the on-time and is released into output capacitor C_F during the off-time. The comparator continues to gate the oscillator square wave to Q_1 until enough energy is stored in C_F to make the comparator input voltage decrease to less than 0 V. The voltage applied to the comparator is set by the output voltage, the reference voltage, and the ratio of R_1 to R_2.

1.5.4 Buck or Step-Down

Figure 1–12 shows the theoretical buck or step-down configuration. Figure 1–13 shows a typical IC switching regulator (the Raytheon RC4391) connected in a practical step-down converter configuration. Figure 1–14 shows the corresponding waveforms.

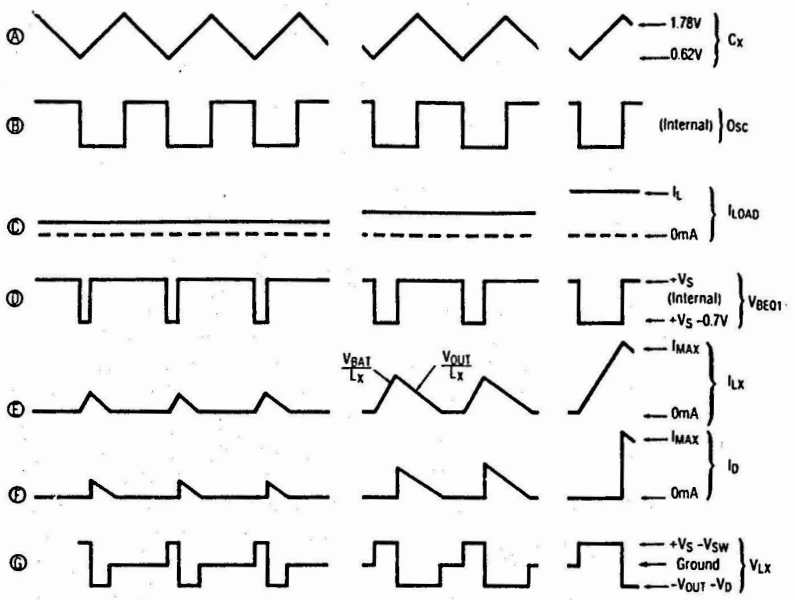

Figure 1–11. Inverter waveforms (*Raytheon Linear Integrated Circuits,* 1989, p. 9-55)

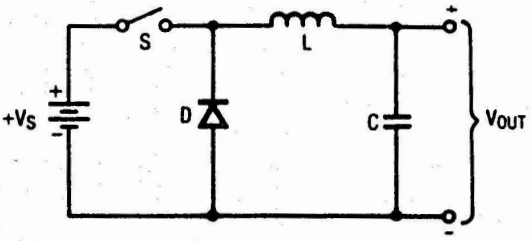

Figure 1–12. Theoretical buck or step-down configuration (*Raytheon Linear Integrated Circuits,* 1989, p. 9-55)

The following paragraphs describe how both theoretical and practical functions are performed and how the practical functions (Fig. 1–13) relate to the theoretical (Fig. 1–12). Notice that switch S in the theoretical circuit is replaced by a transistor (within the IC) in the practical IC circuit. Capacitor C, diode D, and inductor L in Fig. 1–12 are replaced by C_F, D_1, and L_X in Fig. 1–13. Also notice that the ground lead of the IC (pin 4) is not connected to circuit ground. Instead, pin 4 is tied to the output voltage. Using this rearrangement of the feedback system, it is possible

to regulate a nonnegative output voltage (as the feedback system senses voltages more negative than the ground lead).

As shown in Fig. 1–12, when switch S is closed, current flows from the battery, through the inductor L, and through the load resistance to ground. After S is opened, stored energy in L causes current to keep flowing through the load. The circuit is completed by catch diode D. Because current flows to the load during charge and discharge, the average load current is greater than in an inverting circuit. The significance is that *for equal load currents, the step-down circuit requires less peak inductor current than an inverting circuit.* As a result, the inductor of a step-down circuit can be smaller than for inverting, and the switch transistor in a step-down IC is not stressed as heavily for equal load currents.

In the practical circuit of Fig. 1–13, output filter capacitor C_F is discharged, so that the ground lead (pin 4) potential starts at 0 V. The reference voltage is forced to +1.25 V above the ground lead, pulling the feedback input (pin 8) more positive than the ground lead. This positive voltage forces the control network to start pulsing the output transistor.

As the switching action pumps up the output voltage, the ground lead rises with the output until the voltage on the ground lead is equal to the feedback voltage. At that point, the control network reduces the on-time of the switch to maintain a constant output.

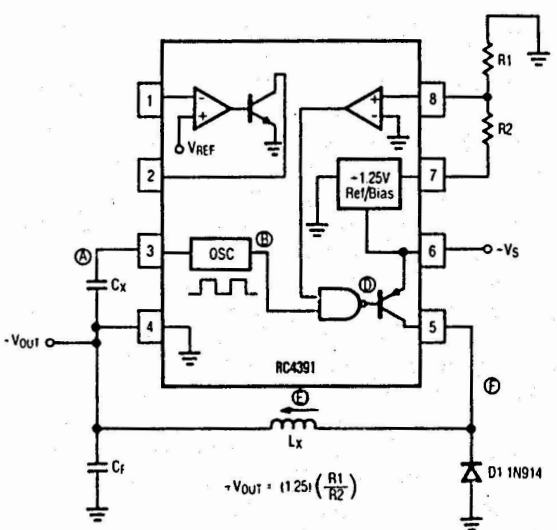

Important Note: This circuit must have a minimum load ≥ 1 mA always connected

Figure 1–13. Practical step-down converter configuration (*Raytheon Linear Integrated Circuits,* 1989, p. 9-56)