US 20090034354A1

(19) United States

(12) Patent Application Publication

Resnick

(10) Pub. No.: US 2009/0034354 A1

(43) Pub. Date: Feb. 5, 2009

(54) METHOD, SYSTEM, AND APPARATUS FOR VOLTAGE SENSING AND REPORTING

(75) Inventor: **David R. Resnick**, Boise, ID (US)

Correspondence Address:
TRASK BRITT, P.C./ MICRON TECHNOLOGY
P.O. BOX 2550
SALT LAKE CITY, UT 84110 (US)

(73) Assignee: MICRON TECHNOLOGY, INC., Boise, ID (US)

(21) Appl. No.: 11/830,531

(22) Filed: Jul. 30, 2007

Publication Classification

(51) Int. Cl.
G11C 29/50 (2006.01)

(52) U.S. Cl. 365/228

(57) ABSTRACT

A method, apparatus and system are disclosed for sensing and reporting voltage levels in a semiconductor device. One such voltage sensor and reporting device is configured to sense and compare a reference voltage and an operating voltage. In one or more embodiments we voltage sensor is also configured to generate an alarm signal if the difference between the operating voltage and the reference voltage indicates the operating voltage is outside of a normal operating range.

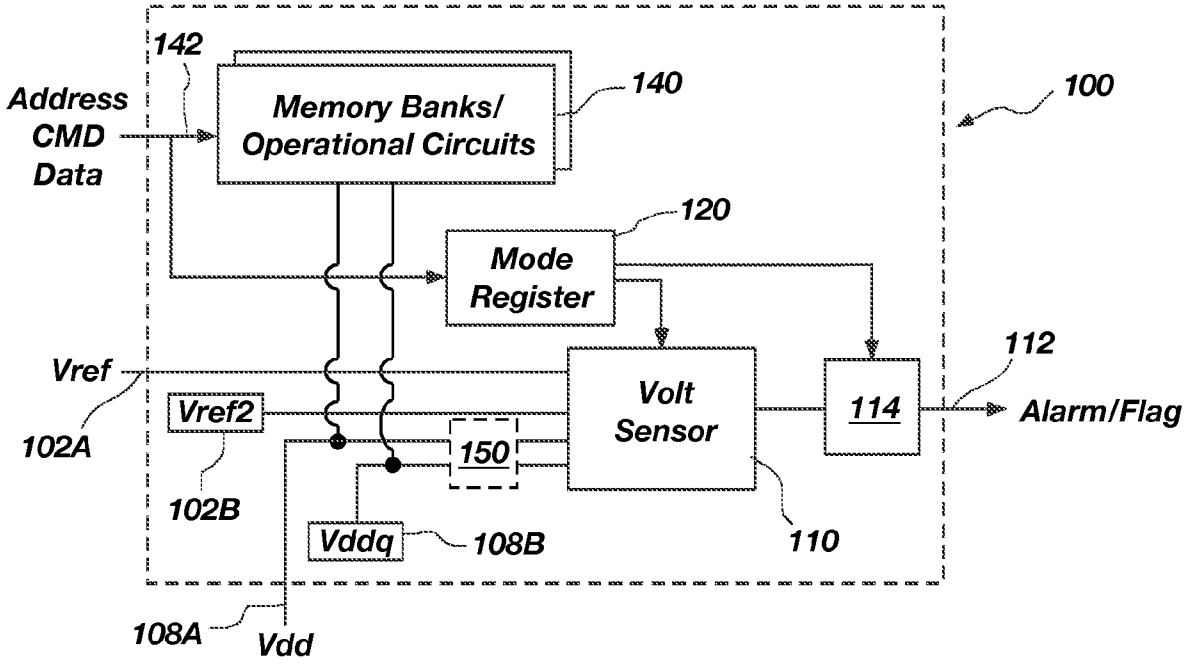

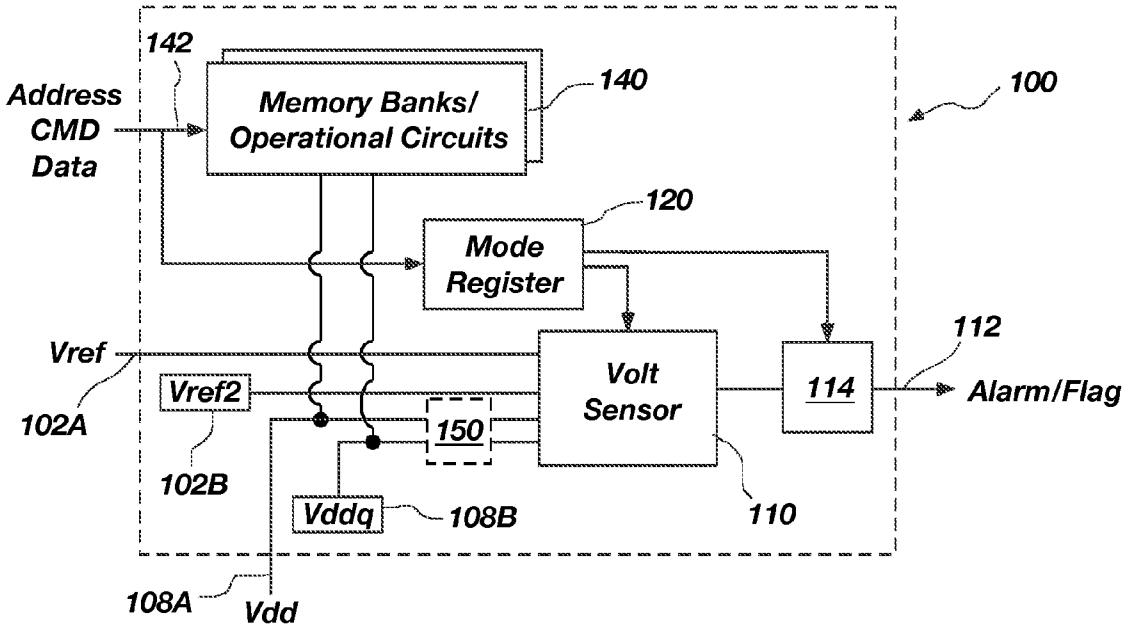
142
Address
CMD
Data
Memory Banks/
Operational Circuits
140
100
120
Mode
Register
Vref
Vref2
102A
102B
Volt
Sensor
150
114
112
Alarm/Flag
Vddq
108B
110
108A
Vdd

FIG. 1

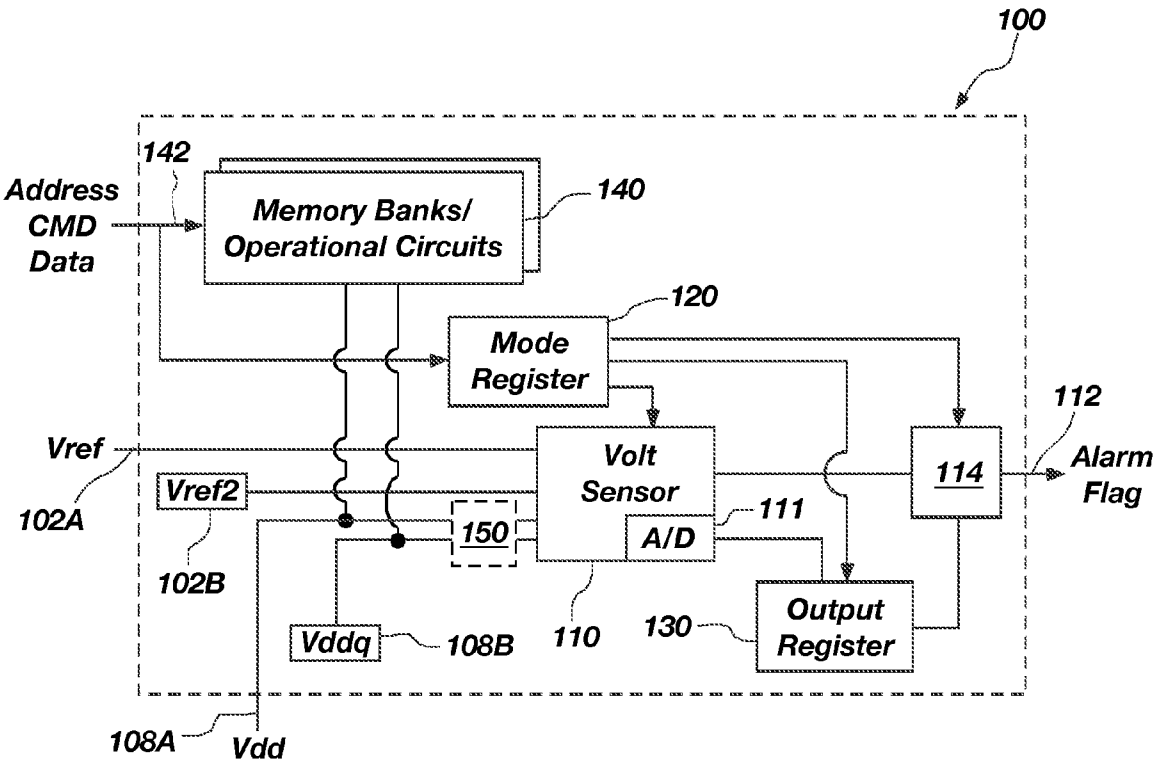
100
142
Address
CMD
Data
Memory Banks/
Operational Circuits
140
120
Mode
Register
112
Vref
Vref2
102A
102B
Volt
Sensor
150
A/D
111
114
Alarm
Flag
Vddq
108B
110
130
Output
Register
108A
Vdd

FIG. 2

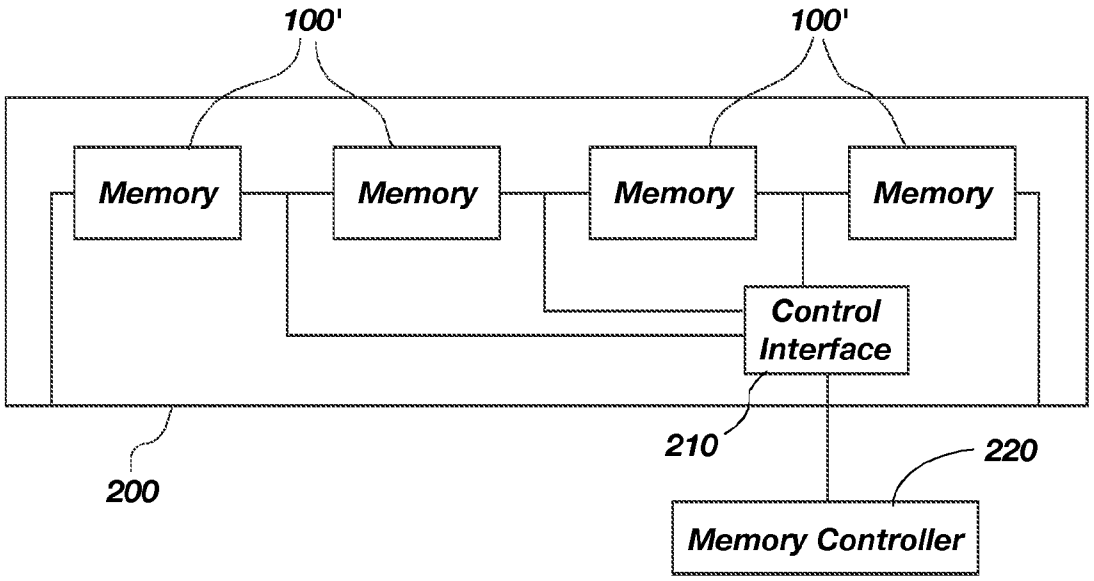
100'
100'
Memory
Memory
Memory
Memory
Control Interface
210
200
220
Memory Controller

FIG. 3

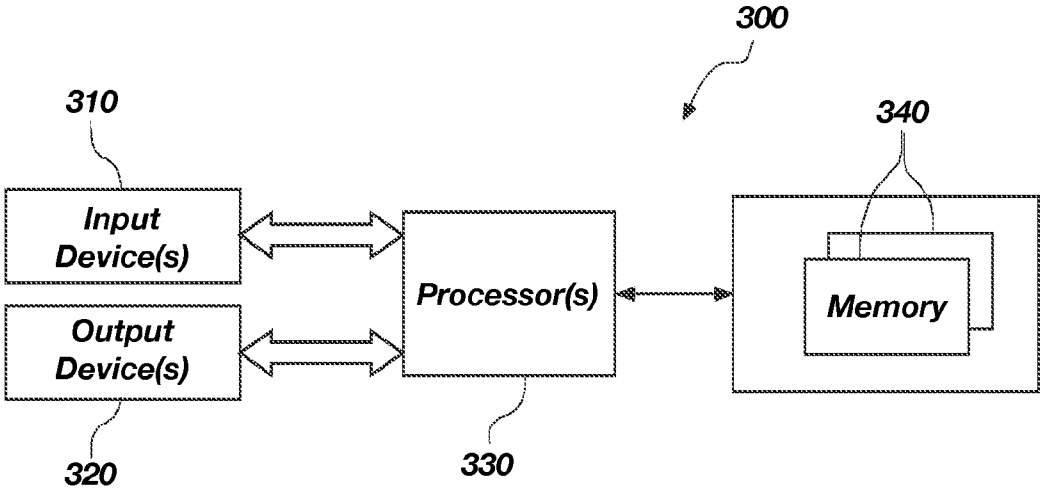
300
310
340
Input Device(s)
Output Device(s)
Processor(s)
Memory
320
330

FIG. 4

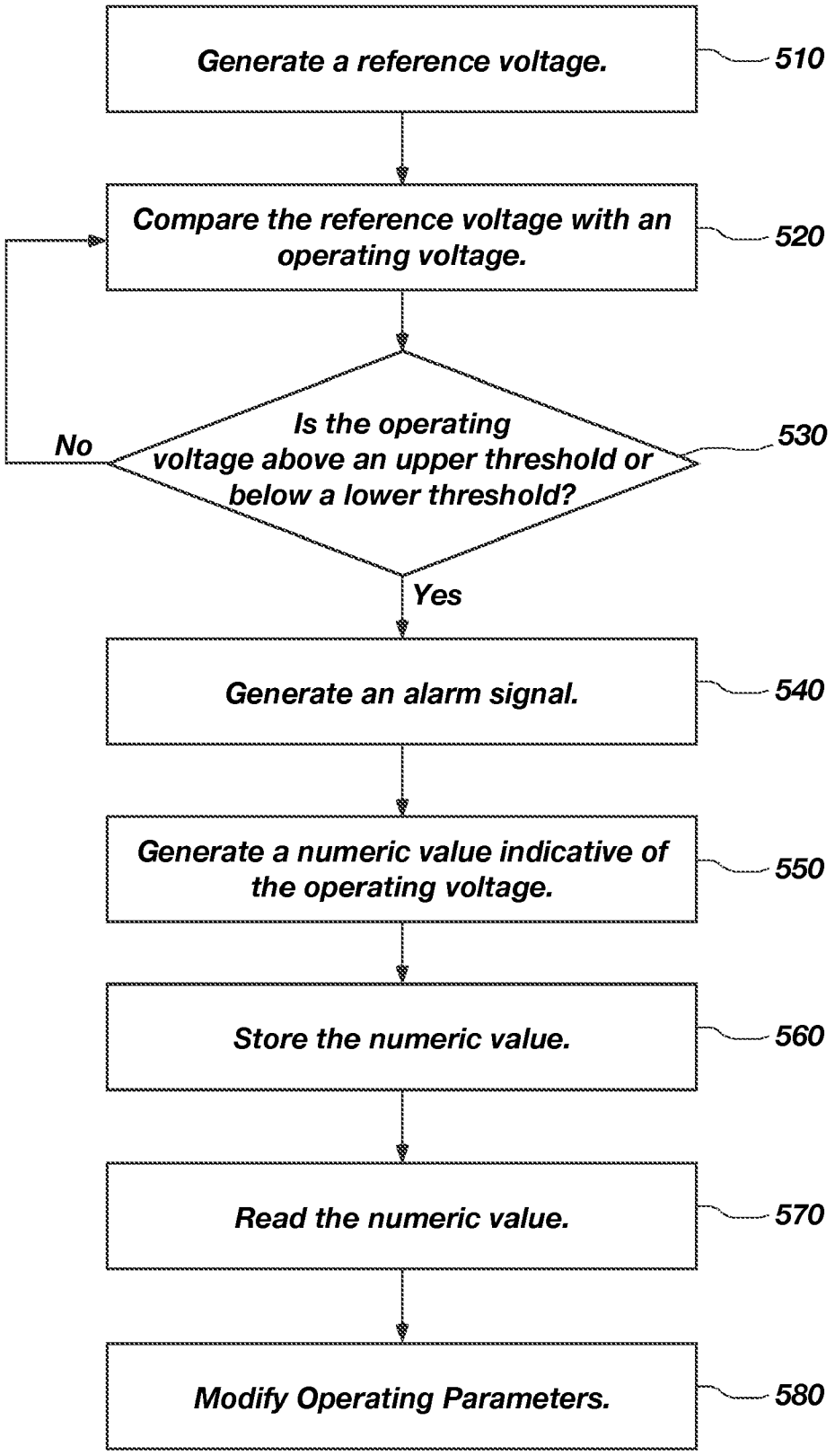
Generate a reference voltage.
510
Compare the reference voltage with an operating voltage.
520
Is the operating voltage above an upper threshold or below a lower threshold?
530
No
Yes
Generate an alarm signal.
540
Generate a numeric value indicative of the operating voltage.
550
Store the numeric value.
560
Read the numeric value.
570
Modify Operating Parameters.
580

FIG. 5

METHOD, SYSTEM, AND APPARATUS FOR VOLTAGE SENSING AND REPORTING

FIELD OF THE INVENTION

[0001] Embodiments of the present invention relate to voltage sensors and, particularly, in one or more embodiments, to determining and reporting various voltages on a semiconductor device, sensing and reporting methods, and systems including sensing and reporting capability.

BACKGROUND

[0002] Semiconductor devices, like most electronic products, are sensitive in their operation to supplied voltage levels. If voltage levels at working parts are lower than specified minimum requirements, the parts may malfunction. If voltage levels are higher than specified maximum requirements, the parts may malfunction and can also suffer catastrophic failure. In semiconductor memory devices, for example, such as Dynamic Random Access Memories (DRAMs), inadequate voltage levels may cause memory parts to malfunction by reading out or storing incorrect information. Such low voltage failures are often difficult to detect, and even when they are detected the resultant functional and data errors can seldom be recovered.

[0003] Often, the semiconductor device is still operational when the voltage levels become marginal causing the device to potentially fail in some aspect. For example, a memory device may not meet its full timing specifications at low voltages, resulting in a failure to read correct data. Even though the read data may be correct, the access time until correct data is available may be longer than designated by the device specification. Similarly, a low voltage level may result in the memory device's bit-cell capacitors not having enough time to fully change during a write cycle, even though they would work correctly if given additional time to complete the write cycle. In such a case, the bit-cells cannot be properly read and the data becomes corrupted.

[0004] There are many causes for unsuitable voltage levels to semiconductor devices, such as power supply errors and power distribution path effects. Power supply errors may result when the power supply is inadequate, misadjusted, or fails all together. Power distribution path effects influence voltage levels, for example through transient noise signals, inductance, and/or resistance in power distribution paths. As semiconductor device activity increases, these power distribution path effects often add together and further increase the chances of data and functional errors.

[0005] Historically, voltage sensors have been used to detect the voltage levels coming directly from the power supplies. However, these devices are limited to sensing voltage errors in he supply voltage. These systems are not capable of detecting whether voltage levels are unsuitable at specific locations (e.g., circuits) within the semiconductor device itself. Thus, these devices do not detect unsuitable voltage levels not caused by the voltage source itself, such as the distribution path effects described above.

[0006] In view of the shortcomings in the prior art, it would be advantageous to provide a semiconductor device capable of sensing and/or reporting voltage levels at operational circuits within the semiconductor device.

BRIEF DESCRIPTION OF THE DRAWINGS

[0007] FIG. **1** is a block diagram illustrating a semiconductor memory device including a voltage sensing and reporting device according to one embodiment of the invention.

[0008] FIG. **2** illustrates a voltage sensing and reporting device including numeric result reporting according to one embodiment of the invention.

[0009] FIG. **3** is a memory card containing a plurality of semiconductor memory devices containing a voltage sensing and reporting device according to one embodiment of the invention.

[0010] FIG. **4** is a computing system diagram showing a plurality of semiconductor memories containing a voltage sensing and reporting device according to one embodiment of the invention.

[0011] FIG. **5** is a flow diagram illustrating a method for sensing and reporting voltage in a semiconductor memory device according to one embodiment of the invention.

DETAILED DESCRIPTION

[0012] In the following detailed description, circuits and functions may be shown in block diagram form in order not to obscure the present invention in unnecessary detail. Additionally, block definitions and partitioning of logic between various blocks as depicted is non-limiting, and comprise examples of only specific implementations. It will be readily apparent to one of ordinary skill in the art that the present invention may be practiced in a variety of embodiments implementing numerous other partitioning solutions.

[0013] Also, it is noted that the embodiments may be described in terms of a process that is depicted as a flowchart, a flow diagram, a structure diagram, or a block diagram. Although a flowchart may describe operational acts as a sequential process, many of these acts can be performed in another sequence, in parallel, or substantially concurrently. In addition, the order of the acts may be re-arranged. A process is terminated when its acts are completed. A process may correspond to a method, a function, a procedure, a subroutine, a subprogram, etc. When a process corresponds to a function, its termination corresponds to a return of the function to the calling function or the main functions

[0014] FIG. **1** is a block diagram illustrating a semiconductor memory device **100** including a voltage sensing and reporting device according to one embodiment. The semiconductor memory device **100** may be a DRAM with conventional memory banks and operational circuits **140** and be controlled by conventional address, command, and data buses **142**. Semiconductor memory device **110** includes at least one voltage sensor **110** for sensing voltages. The at least one voltage sensor **110** may include a voltage comparator configured according to any of the known configurations in the art. The voltage comparator may be configured to compare an operating voltage (**108**A, **108**B), such as V_{dd} or V_{ddq}, to a reference voltage (**102**A, **102**B), such as V_{ref} or V_{ref2}, for determining a voltage difference. The term "voltage difference," as used herein, refers to a quantifiable difference between the operating voltage level and the reference voltage level, which difference may be expressed as a numerical value.

[0015] The operating voltage (**108**A, **108**B) may be a supply voltage **108**A from an input pin or may be an operating voltage **108**B generated internally on the semiconductor memory device **100**. The operating voltage (**108**A, **108**B) may be configured to supply a voltage to one or more operational circuits **140** of the semiconductor memory device **100**. By way of example and not limitation, operational circuits **140** may include column decoder circuits, write driver circuits, data read and write multiplexers, DC sense amplifiers,

etc. Although FIGS. **1** and **2** illustrate the operating voltage (**108**A, **108**B) coupled to operational circuits **140**, one of ordinary skill in the art will recognize that the operating voltage (**108**A, **108**B) may be further coupled to other elements in FIGS. **1** and **2** although it may not be specifically illustrated.

[0016] Similar to the operating voltage (**108**A, **108**B), the reference voltage (**102**A, **102**B) may be a supply voltage **102**A from an input pin to the semiconductor device, or the reference voltage may be a reference voltage **102**B generated internally on the semiconductor memory device **100** in any manner known in the art. By way of example and not limitation, the internally generated reference voltage **102**B may be generated from a simple resistor voltage divider, a voltage drop generated by a forward biased diode, a reverse-biased Zener diode, or a bandgap reference circuit. Since different circuits of the semiconductor device may require different voltage levels, there may be more than one reference voltage in semiconductor memory device **1**X. The reference voltage, as known in the art, may be characterized as a substantially constant voltage within conventional tolerances. In some embodiments, the reference voltage may comprise a ground as opposed to an actual voltage level.

[0017] The at least one voltage sensor **110** may be configured to compare the different reference voltages with different operating voltages. As a non-limiting example, voltage sensor **110** may be set to compare a first reference voltage V_{ref} with a first operating voltage V_{dd}. Voltage sensor **110** may further be set to compare a second voltage reference V_{ref2} with a second operating voltage V_{ddq}. It will be apparent to one of ordinary skill in the art that it is possible to compare a plurality of reference voltages with a plurality of operating voltages according to numerous combinations, including the disposition of more than one voltage sensor **110** on the semiconductor memory device **100**. In some embodiments, a single voltage sensor **110** may be operably connected to compare a plurality of operating voltages to one or more reference voltages as described below.

[0018] Further, a voltage sensor **110** may be configured to signal an alarm in the case where the operating voltage is outside of a range. As used herein, "range" signifies the magnitude of the voltage is beyond a predetermined threshold level, which may be an upper or lower level relative to an expected, or normal operating voltage, and is not to be read as requiring the device to necessarily have an operating range sensed between an upper and a lower threshold. In some embodiments the voltage sensor **110** may be configured to signal an alarm when the operating voltage is above an upper threshold or below a lower threshold, as determined from comparison with the reference voltage. In other embodiments, the voltage sensor **110** may be configured to signal an alarm only when the voltage level is below a lower threshold, while having no upper limit In still other embodiments the voltage sensor **110** may be configured to signal an alarm only when the voltage level is above an upper threshold. Thus, use of the term "range" herein is not limited to embodiments requiring upper and lower thresholds.

[0019] If the operating voltage is above or below the relevant threshold, voltage sensor **110** may indicate the voltage failure by sending a flag such as alarm signal **112** to a pin on semiconductor memory device **100** for signaling the alarm externally. It is contemplated that voltage sensor **110** may be coupled to, and share a previously existing pin on semiconductor memory device **100**, such as, for example, a boundary scan pin. One of ordinary skill in the art will recognize that any existing pin suitable for sharing may be used to communicate the voltage sensor output. Alternatively, a new pin may be provided on semiconductor memory device **100** with which voltage sensor **110** may be associated. As described above, there may be more than one voltage supplied within the semiconductor memory device **100**. In this case a voltage sensor **110** may he provided for each supplied voltage, or, as described above, voltage sensor **110** may be configured to compare multiple reference voltages to multiple operating voltages. In the case where a voltage sensor **110** is provided for each voltage, the outputs for each of the voltage sensors may be connected to the same output pin through an optional output controller **114**. By way of non-limiting example, output controller **114** may be configured as one or more logic 'OR' gates, or as a multiplexer.

[0020] As stated, the pin on semiconductor memory device **100** for carrying the alarm signal **112** externally may be configured as a boundary scan output pin or other internal scan output pin. When not configured for performing a scan function, the scan output pin may be configured to carry the output from the output controller **114** (if present) or directly carry the alarm signal **112**. For example, the pin can serve to carry the alarm signal **112** externally during normal operation, when scan functions or other similar functions are not being cared out. When placed into a maintenance or scan mode, the pin may be configured to carry out such other function or functions instead of carrying the alas signal **112**.

[0021] The output pin may be operably coupled to any suitable external component, which may also be characterized as an external module. By way of example and not limitation, the output pin may be operably coupled to a memory controller, to receive the alarm signal **112** from the at least one voltage sensor **110**. Upon receiving the alarm signal **112**, the memory controller may be configured to adjust an operating parameter for the semiconductor memory device **100**. As a non-limiting example, the memory controller may adjust the timing, and/or the power voltage levels for the semiconductor memory device **100**. Adjusting the timing may allow more time to complete operations of the semiconductor memory device **100**. For example, the adjustment may provide semiconductor memory device **100** with more time to complete reading and writing operations.

[0022] In another embodiment, and as a non-limiting example, the output pin of the semiconductor memory device **100** may be operably coupled to a maintenance system. The maintenance system may be configured to adjust an operating parameter for the semiconductor memory device **100** upon receiving the alarm signal **112**. In still another embodiment, the output pin may be operably coupled to both a maintenance system and a memory controller.

[0023] With further reference to FIG. **1**, a mode register **120** may be operably coupled to voltage sensor **110** and configured to control the operation of voltage sensor **110**. By way of example and not limitation, mode register **120** may be an existing mode register within semiconductor memory device **100**. For example, mode register **120** may be a mode register used for another function in semiconductor memory device **100**. Alternatively, mode register **120** may be added as a unique register to the circuit architecture of semiconductor memory device **100**. For example, mode register **120** may be added in an unused extended mode register position conventionally found in current DRAMs. The mode register **120** may be controlled and written to using conventional memory

device commands. Mode register **120** may be configured to control voltage sensor **110** with one or more bits. At least one bit may be provided and used to enable and disable voltage sensor **110**. One or more additional bits may be provided and used to select which voltage reference is to be used when there are more than one voltage references available. Additionally, mode register **120** may be configured to provide one or more bits for selecting which operating voltage to compare in the case that there are more than one operating voltages. In the case where there may be more tan one voltage sensor **1**I **0**, one or more bits may be provided from mode register **120** to control additional voltage sensors. Mode register **120** may also be used to define and enable he adjustment of the upper and lower threshold value for each of the operating voltages (**108**A and **108**B). Mode register **120** may additionally be used to select which voltage sensor **110** may communicate through the output pin on the semiconductor memory device **100**. In some embodiments, mode register **120** may be coupled to output controller **114** to control the operations of output controller **114**.

[0024] One of ordinary skill in the art will recognize that multiple mode registers may be used instead of just one, as described above, in appropriate situations. As a non-limiting example, a different mode register may be used to control each of a plurality of voltage sensors **110** on the semiconductor memory device **100**. In addition, another mode register may be used to select which voltage sensor **110** is communicating through the alarm signal **112**. The additional mode register may select a voltage sensor directly to communicate through the alarm signal **112**, or the mode register may select which voltage sensor may communicate by controlling output controller **114**. In addition, if the alarm signal **112** is configured on a scan output pin, the mode register **120** may control whether the scan output pin is configured to carry the alarm signal **1**I **2**, or conventional scan output signals.

[0025] As described above, in some embodiments a single voltage sensor **110** may be operably connected to compare a plurality of operating voltages to one or more reference voltages. In these embodiments a multiplexer **150** (shown in broken lines in FIG. **1**) may be employed to control which operating voltage is being compared with a reference voltage. The multiplexer **150** may further control the duration of time each operating voltage is compared wit the reference voltage. A suitable multiplexer **150** may comprise transmission gates so that the operating voltages are sent through the multiplexer **150** to the voltage sensor **10**. Additionally, a suitable multiplexer **150** may exhibit an impedance which is relatively low compared to the other transmission line impedances. In such embodiments, a mode register as described above may be employed to control the multiplexer **150** and the rate at which the different operating voltages are compared.

[0026] Additionally, one of ordinary skill in the art will recognize that embodiments of the present invention may be configured without a mode register. As a non-limiting example, a voltage sensor **110** may be configured to compare a single operating voltage (**108**A or **108**B) with a single reference voltage (**102**A or **102**B) and to generate alarm signal **112** in the case the voltage difference is greater than a preset level.

[0027] FIG. **2** illustrates a voltage sensing and reporting device including numeric result reporting according to one embodiment. At least one voltage sensor **110** may include an analog-to-digital (A/D) converter **111**. A/D converters are well known in the art and any suitable A/D converter may be employed. The A/D converter **111** may be used to convert the voltage difference between the reference voltage (**102**A, **102**B) and the operating voltage (**108**A, **108**B) to a numeric value specified by one or more bits. In embodiments in which the reference voltage is a ground, as described above, the A/D converter **111** may be used to convert the operating voltage to a numeric value relative to the ground. An output register **130** may be operably coupled to an output of the A/D converter **111** and configured to receive and store the numeric value of the voltage difference from the at least one voltage sensor **110**. As a non-limiting example, an operating voltage that is too low may be sensed in a voltage sensor **110** and compared to the reference voltage. The value of the voltage difference may be indicated by a numeric value converted by the A/D converter. The numeric value may be in the form of a plurality of bits such as, for example, a byte. The numeric value may be sent from the A/D converter **111** to the output register **130** either serially, if there is only a single communication line, or through a bus (not shown). The numeric value may be stored in output register **130**. Output register **130** may be further operably coupled to the same output pin configured to carry alarm signal **112** and may be configured to send the numeric value serially to the output pin as either part of or separate from a scan path.

[0028] As described above, the output pin may be operably coupled to any suitable external component, which may also be described as an external module, such as a memory controller, a maintenance system, etc. In embodiments similar to that illustrated in FIG. **2**, the suitable external component may receive the alarm signal **112** generated by the voltage sensor **110**. By way of example and not limitations the suitable external component may comprise a memory controller. Upon receipt of the alarm signal **112**, the memory controller may send control bits to the mode register(s) **120** indicating that output register **130** should send its contents out on the alarm signal **112** in a serial fashion. The mode register **120** may control the output register **130** and output controller **114** to cause the serial output to occur. As with the alarm signals, the output register content may be serially scanned out on a dedicated signal pin, another multiple function pin, an internal scan pin, a boundary scan pin, etc.

[0029] In some embodiments, as described above, mode register **120** may be operably coupled and configured to control output register **130**. Similar to FIG. **1**, above, mode register **120** may be the same mode register used to control voltage sensor **110** and/or output controller **114**. In other embodiments, mode register **120** may be a separate mode register from the mode register configured to control voltage sensor **110** and output controller **114**. Mode register **120** may provide one or more bits for controlling the operation of output register **130**.

[0030] Similar to FIG. **1**, above, the embodiment illustrated in FIG. **2** may include a single voltage sensor I **10** operably connected to compare a plurality of operating voltages to one or more reference voltages. These embodiments may include the multiplexor **150** as described above with relation to FIG. **1**.

[0031] As shown in FIG. **3**, a substrate **200**, such as a printed circuit board (PCB), in accordance with an embodiment of the present invention, includes a plurality of semiconductor memory devices **100'**, at least one of which incorporates at least one embodiment of a voltage sensing and reporting device as described herein. It should be understood that each semiconductor memory device **100'** might comprise

one of a wide variety of devices, including, for example, Dynamic RAM (DRAM) devices, Static RAM (SRAM) devices, and Flash memory devices. The output pin configured to carry the alarm signal of each of the semiconductor memory devices **100'** hat support the voltage sensing function may be operably coupled to a suitable external component, which may also be characterized as set forth above as an external module, that is configured to receive the alarm signal **112**. For example, the output pins may be operably coupled to a memory controller **220** through a memory controller interface **210**. Upon receiving the alarm signal **112**, the memory controller **220** may adjust an operating parameter as described above. As shown in FIG. **4** an electronic system **300**, such as a computer system, in accordance with an embodiment of the present invention, comprises at least one input device **310**, at least one output device **320**, at least one processor **330**, and at least one memory device **340**. As used herein, the term "computer system" includes not only computers such as personal computers and servers, but also wireless communications devices (e.g., cell phones, personal digital assistants configured for text messaging and email), cameras, chip sets, set top boxes, controllers, vehicle and engine control and sensor systems, and other combinations of the above-referenced input, output, processor and memory devices. The at least one memory device **340** comprises at least one semiconductor memory device **100** incorporating at least one of the voltage sensing and reporting device described herein according to an embodiment of the invention. As a non-limiting example, each memory device **340** may comprise a module configured as a substrate **200** bearing multiple semiconductor memory devices **100** as is illustrated in FIG. **3**. It should be understood that the semiconductor memory devices **100** may be selected from a wide variety of devices, including, for example, Dynamic RAM (DRAM) devices, Static RAM (SRAM) devices, and Flash memory devices, and combinations thereof.

[0032] Furthermore, embodiments of the present invention can be implemented in types of semiconductor devices other than memories. By way of non-limiting example, embodiments of the present invention may be implemented in microprocessors, microcontrollers, system-on-a-chip, and image sensors. As a non-limiting example, in a microprocessor or microcontroller, clock speed, execution unit operation, and memory access times may be adjusted responsive to results from the voltage sensor **110** (FIGS. **1** and **2**). As another non-limiting example in an image processor, operational parameters such as integration time, pixel reset times, pixel reset voltages, analog-to-digital conversion operations, and signal processing operations such as bit repairs and image compression may be adjusted responsive to results from the voltage sensor **110**.

[0033] One of ordinary skill in the art will recognize that when implemented in semiconductor devices other than memories, the mode register(s) used to control the voltage sensor **110**, output controller **114**, and output register(s) **130** would be written to using command appropriate for the semiconductor device rather than conventional memory commands that may be used in a DRAM or flash memory device.

[0034] FIG. **5** illustrates one embodiment of a method of sensing and reporting voltage levels in a semiconductor memory device. A reference voltage may be generated at **510**. The reference voltage may be generated, for example, from a power supply, a simple resistor voltage divider, a voltage drop generated by a forward biased diode, a reverse-biased Zener diode, a bandgap reference circuit, an external voltage source, or any other method known to those of ordinary skill in the art. The reference voltage may be compared to an operating voltage in a voltage sensor at **520**. The reference voltage and operating voltage may be compared in a voltage comparator. The voltage sensor may determine whether the operating voltage is within an acceptable range above an upper threshold or below a lower threshold at **530**. W the operating voltage is within normal operating conditions, e.g., below the upper threshold and above the lower threshold, the process returns to comparing the operating voltage with the reference voltage. It however, the operating voltage is outside of the normal operating range, e.g., below a lower threshold or above an upper threshold, an alarm signal may be generated at **540**. The upper and lower thresholds selected may vary according to the specific application. In some embodiments the sequence illustrated in FIG. **5** may end at this point and may use an external device (e.g., a maintenance system) for providing outside support such as adjustments to one or more operational parameters.

[0035] In other embodiments a numeric value indicative of the operating voltage may be generated at **550**. The numeric value may then be stored for later retrieval at **560**, and the stored numeric value may be retrieved and read by another device at **570**. By way of example, and not limitation, the numeric value may be stored in an output register, and retrieved by a control module. Those of ordinary skill in the art will recognize that the numeric value may be stored in any suitable register or memory location. Additionally, the alarm, the numeric value, or both, may be made available to any external module determined by the designer to be suitable. By way of example and not limitation, the alarm, the numeric value, or both, may be made available to at least one of a memory controller and a maintenance system. Adjustments may be made to one or more operational parameters on the semiconductor memory device to compensate for the power issues based on at least one of the alarm signal and the numeric value at **580**.

CONCLUSION

[0036] In one embodiment of the present invention a semiconductor device may employ at least one reference voltage. At least one operating voltage may be employed, associated with at least one circuit of the semiconductor device. At least one voltage sensor is configured to compare the at least one reference voltage and the at least one operating voltage. The voltage sensor may, optionally, be configured to generate an alarm signal if a difference between the operating voltage and the reference voltage is greater than a predetermined amount.

[0037] In another embodiment of the invention, a memory card comprising a plurality of memory devices is provided. At least one of the memory devices is configured with at least one voltage sensor as described above.

[0038] Another embodiment of the invention comprises an electronic system. The electronic system may include at least one input device, at least one output device, a processor, and at least one memory device configured with at least one voltage sensor as described above

[0039] An embodiment of a method for sensing and reporting a voltage in a semiconductor device is also provided, the method including comparing an operating voltage to a reference voltage and determining whether the operating voltage is outside a predetermined voltage range. The method may

further include generating an alarm signal when the operating voltage is outside the predetermined voltage range.

[0040] While certain embodiments have been described and shown in the accompanying drawings, such embodiments are merely illustrative and not restrictive of the scope of the invention, and this invention is not limited to the specific constructions ad arrangements shown and described, since various other additions and modifications to, and deletions from, the described embodiments will be apparent to one of ordinary skill in the an. Thus, the scope of the invention is only limited by the literal language, and equivalents, of the claims which follow.

1. A semiconductor device, comprising:

at least one voltage sensor configured to compare at least one reference voltage and at least one operating voltage associated with at least one operational circuit of the semiconductor device;

wherein the at least one voltage sensor is configured to signal an alarm if a difference between the at least one operating voltage and the at least one reference voltage indicates the at least one operating voltage is outside of a selected range; and

wherein the semiconductor device is configured to signal the alarm externally.

2. The semiconductor device of claim **1**, further comprising at least one mode register operably coupled to the at least one voltage sensor and configured to control the operation of the at least one voltage sensor.

3. The semiconductor device of claim **2**, wherein at least one of the at least one voltage sensor, the at least one reference voltage and the at least one operating voltage respectively comprises a plurality thereof.

4. The semiconductor device of claim **3**, wherein the at least one mode register is configured to perform at least one of the following functions: enable/disable the at least one voltage sensor; if the at least one reference voltage comprises a plurality, select a reference voltage of the plurality of reference voltages; if the at least one operating voltage comprises a plurality, select an operating voltage of the plurality of operating voltages; define an upper and a lower threshold value for the at least one voltage sensor; and if the at least one voltage sensor comprises a plurality, select a voltage sensor of the plurality of voltage sensors to signal the alarm externally.

5. The semiconductor device of claim **1**, wherein the alarm is signaled externally through at least one internal scan output pin.

6. The semiconductor device of claim **2**, wherein the at least one mode register is configured to control an internal scan output pin to switch between carrying one of the alarm signal and at least one other scan output signal.

7. The semiconductor device of claim **1**, wherein the at least one voltage sensor is further configured to generate a numeric value related to the at least one operating voltage.

8. The semiconductor device of claim **7**, further comprising at least one output register operably coupled to the at least one voltage sensor and configured to receive and store the numeric value.

9. The semiconductor device of claim **1**, wherein the at least one reference voltage is provided by a voltage source selected from the group consisting of an input pin, a resistor voltage divider, a voltage drop across a forward biased diode, a reverse-biased Zener diode, and a bandgap reference circuit.

10. The semiconductor device of claim **1**, wherein the at least one operating voltage comprises a plurality of operating voltages.

11. The semiconductor device of claim **1**I, wherein the at least one voltage sensor comprises a plurality of voltage sensors and the at least one reference voltage comprises a plurality of reference voltages, wherein each of the plurality of voltage sensors is configured to compare at least one of the plurality of operating voltages to one of the plurality of reference voltages.

12. The semiconductor device of claim **10**, further comprising: wherein the at least one voltage sensor comprises a single voltage sensor; and

a multiplexer operably coupled to the single voltage sensor and the plurality of operating voltages, and configured to control which operating voltage of the plurality of operating voltages is compared with the at least one reference voltage.

13. The semiconductor device of claim **1**, wherein the selected range comprises at least one of an upper threshold and a lower threshold.

14. A memory card comprising:

a plurality of memory devices, at least one of the plurality of memory devices comprising at least one voltage sensor configured to cause an alarm to be signaled from the at least one memory device responsive to a difference between at least one operating voltage associated with at least one circuit of the at least one memory device of the plurality and at least one reference voltage, the alarm indicating the at least one operating voltage is outside of a range.

15. The memory card of claim **14**, wherein the at least one of the plurality of memory devices is operably coupled to a memory controller configured to receive the alarm signal.

16. The memory card of claim **15**, wherein the memory controller is further configured to adjust at least one operating parameter of the at least one of the plurality of memory devices responsive to receipt of the alarm signal.

17. The memory card of claim **14**, further comprising:

wherein the at least one voltage sensor comprises a single voltage sensor;

wherein the at least one operating voltage comprises a plurality of operating voltages; and

a multiplexer operably coupled to the single voltage sensor and the plurality of operating voltages, and configured to control which operating voltage of the plurality of operating voltages is compared with the at least one reference voltage.

18. The memory card of claim **14**, wherein the at least one voltage sensor is further configured to generate a numeric value associated with the at least one operating voltage.

19. The memory card of claim **18**, wherein the at least one memory device further comprises at least one output register operably coupled to the at least one voltage sensor and configured to receive and store the numeric value.

20. The memory card of claim **14**, wherein the plurality of memory devices comprise at least one device selected from the group consisting of a Dynamic RAM (DRAM), a Synchronous DRAM (SDRAM), a Static RAM (SRAM), and a Flash memory.

21. The memory card of claim **14**, wherein the at least one reference voltage is provided by a voltage source selected from the group consisting of an input pin, a resistor voltage

divider, a voltage drop across a forward biased diode, a reverse-biased Zener diode, and a bandgap reference circuit.

22. The memory card of claim **14**, wherein the at least one memory device of the plurality of memory devices further comprises at least one mode register operably coupled to the at least one voltage sensor and configured to control the operation of the at least one voltage sensor.

23. The memory card of claim **22**, wherein the at least one mode register is configured to perform at least one of the following functions: enable/disable the at least one voltage sensor; select the at least one reference voltage; select the at least one operating voltage; define an upper and a lower threshold value for the at least one voltage sensor; select the at least one voltage sensor to signal the alarm externally; and control an internal scan output pin to switch between carrying one of the alarm and at least one other scan output signal.

24. The memory card of claim **14**, wherein the range comprises at least one of an upper threshold and a lower threshold.

25. An electronic system comprising:

a processor; and

at least one memory device comprising at least one voltage sensor for determining a difference between at least one reference voltage and at least one operating voltage associated with at least one circuit of the at least one memory device and to cause the at least one memory device to signal an alarm if the difference indicates the at least one operating voltage is outside of a range.

26. The electronic system of claim **25**, wherein the at least one memory device is selected from the group consisting of a Dynamic RAM (DRAM), a Synchronous DRAM (SDRAM), a Static RAM (SRAM), and a Flash memory.

27. The electronic system of claim **25**, further comprising at least one of a memory controller and a maintenance system for adjusting at least one operating parameter of the at least one memory device responsive to the alarm signal.

28. A method for sensing and reporting a voltage in a semiconductor device, comprising:

comparing an operating voltage for at least one operational circuit of the semiconductor device to a reference voltage; and

signaling an alarm if the operating voltage is outside a voltage range.

29. The method of claim **28**, further comprising:

generating a numeric value indicative of a voltage level of the operating voltage.

30. The method of claim **29**, wherein generating a numeric value comprises:

converting the voltage level of the operating voltage to a digital value; and

generating a multiple-bit digital number.

31. The method of claim **28**, further comprising:

adjusting at least one operational parameter of the semiconductor device to compensate for the operating voltage being outside the voltage range.

32. The method of claim **31**, wherein adjusting at least one operational parameter comprises adjusting at least one of a timing parameter, a clock speed parameter, execution unit operation, pixel reset voltages, analog-to-digital conversion operations, and signal processing operations.

33. The method of claim **28**, further comprising generating the reference voltage from at least one from the group consisting of an input pin, a resistor voltage divider, a voltage drop across a forward biased diode, a reverse-biased Zener diode, and a bandgap reference circuit.

34. The method of claim **28**, wherein signaling an alarm if the operating voltage is outside a voltage range comprises signaling the alarm externally through at least one internal scan output pin.

35. The method of claim **28**, wherein the voltage range comprises at least one of an upper threshold and a lower threshold.

* * * * *