LatticeXP Family Data Sheet

Version 04.2, March 2006

LatticeXP Family Data Sheet Introduction

December 2005 | Data Sheet

Features

- **Non-volatile, Infinitely Reconfigurable**
  - Instant-on – powers up in microseconds
  - No external configuration memory
  - Excellent design security, no bit stream to intercept
  - Reconfigure SRAM based logic in milliseconds
  - SRAM and non-volatile memory programmable through system configuration and JTAG ports
- **Sleep Mode**
  - Allows up to 1000x static current reduction
- **TransFR™ Reconfiguration (TFR)**
  - In-field logic update while system operates
- **Extensive Density and Package Options**
  - 3.1K to 19.7K LUT4s
  - 62 to 340 I/Os
  - Density migration supported
- **Embedded and Distributed Memory**
  - 54 Kbits to 414 Kbits sysMEM™ Embedded Block RAM
  - Up to 79 Kbits distributed RAM
  - Flexible memory resources:
    - Distributed and block memory
- **Flexible I/O Buffer**
  - Programmable sysIO™ buffer supports wide range of interfaces:
    - LVCMOS 3.3/2.5/1.8/1.5/1.2
    - LVTTL
    - SSTL 18 Class I
    - SSTL 3/2 Class I, II
    - HSTL15 Class I, III
    - HSTL 18 Class I, II, III
    - PCI
    - LVDS, Bus-LVDS, LVPECL
- **Dedicated DDR Memory Support**
  - Implements interface up to DDR333 (166MHz)
- **sysCLOCK™ PLLs**
  - Up to 4 analog PLLs per device
  - Clock multiply, divide and phase shifting
- **System Level Support**
  - IEEE Standard 1149.1 Boundary Scan, plus ispTRACY™ internal logic analyzer capability
  - Onboard oscillator for configuration
  - Devices operate with 3.3V, 2.5V, 1.8V or 1.2V power supply

Table 1-1. LatticeXP Family Selection Guide

Device	LFXP3	LFXP6	LFXP10	LFXP15	LFXP20
PFU/PFF Rows	16	24	32	40	44
PFU/PFF Columns	24	30	38	48	56
PFU/PFF (Total)	384	720	1216	1932	2464
LUTs (K)	3.1	5.8	9.7	15.4	19.7
Distributed RAM (KBits)	12	23	39	61	79
EBR SRAM (KBits)	54	72	216	324	396
EBR SRAM Blocks	6	8	24	36	44
V_{CC} Voltage	1.2/1.8/2.5/3.3V	1.2/1.8/2.5/3.3V	1.2/1.8/2.5/3.3V	1.2/1.8/2.5/3.3V	1.2/1.8/2.5/3.3V
PLLs	2	2	4	4	4
Max. I/O	136	188	244	300	340
Packages and I/O Combinations:					
100-pin TQFP (14 x 14 mm)	62				
144-pin TQFP (20 x 20 mm)	100	100			
208-pin PQFP (28 x 28 mm)	136	142			
256-ball fpBGA (17 x 17 mm)		188	188	188	188
388-ball fpBGA (23 x 23 mm)			244	268	268
484-ball fpBGA (23 x 23 mm)				300	340

© 2005 Lattice Semiconductor Corp. All Lattice trademarks, registered trademarks, patents, and disclaimers are as listed at www.latticesemi.com/legal. All other brand or product names are trademarks or registered trademarks of their respective holders. The specifications and information herein are subject to change without notice.

Petitioners
Ex. 1067, p. 1-1

Introduction

The LatticeXP family of FPGA devices combine logic gates, embedded memory and high performance I/Os in a single architecture that is both non-volatile and infinitely reconfigurable to support cost-effective system designs.

The re-programmable non-volatile technology used in the LatticeXP family is the next generation ispXP™ technology. With this technology, expensive external configuration memories are not required and designs are secured from unauthorized read-back. In addition, instant-on capability allows for easy interfacing in many applications.

The ispLEVER® design tool from Lattice allows large complex designs to be efficiently implemented using the LatticeXP family of FPGA devices. Synthesis library support for LatticeXP is available for popular logic synthesis tools. The ispLEVER tool uses the synthesis tool output along with the constraints from its floor planning tools to place and route the design in the LatticeXP device. The ispLEVER tool extracts the timing from the routing and back-annotates it into the design for timing verification.

Lattice provides many pre-designed IP (Intellectual Property) ispLeverCORE™ modules for the LatticeXP family. By using these IPs as standardized blocks, designers are free to concentrate on the unique aspects of their design, increasing their productivity.

Petitioners
Ex. 1067, p. 1-2

Architecture Overview

The LatticeXP architecture contains an array of logic blocks surrounded by Programmable I/O Cells (PIC). Interspersed between the rows of logic blocks are rows of sysMEM Embedded Block RAM (EBR) as shown in Figure 2-1.

On the left and right sides of the PFU array, there are Non-volatile Memory Blocks. In configuration mode this non-volatile memory is programmed via the IEEE 1149.1 TAP port or the sysCONFIG™ peripheral port. On power up, the configuration data is transferred from the Non-volatile Memory Blocks to the configuration SRAM. With this technology, expensive external configuration memories are not required and designs are secured from unauthorized read-back. This transfer of data from non-volatile memory to configuration SRAM via wide busses happens in microseconds, providing an “instant-on” capability that allows easy interfacing in many applications.

There are two kinds of logic blocks, the Programmable Functional Unit (PFU) and Programmable Functional unit without RAM/ROM (PFF). The PFU contains the building blocks for logic, arithmetic, RAM, ROM and register functions. The PFF block contains building blocks for logic, arithmetic and ROM functions. Both PFU and PFF blocks are optimized for flexibility, allowing complex designs to be implemented quickly and efficiently. Logic Blocks are arranged in a two-dimensional array. Only one type of block is used per row. The PFU blocks are used on the outside rows. The rest of the core consists of rows of PFF blocks interspersed with rows of PFU blocks. For every three rows of PFF blocks there is a row of PFU blocks.

Each PIC block encompasses two PIOs (PIO pairs) with their respective sysIO interfaces. PIO pairs on the left and right edges of the device can be configured as LVDS transmit/receive pairs. sysMEM EBRs are large dedicated fast memory blocks. They can be configured as RAM or ROM.

The PFU, PFF, PIC and EBR Blocks are arranged in a two-dimensional grid with rows and columns as shown in Figure 2-1. The blocks are connected with many vertical and horizontal routing channel resources. The place and route software tool automatically allocates these routing resources.

At the end of the rows containing the sysMEM Blocks are the sysCLOCK Phase Locked Loop (PLL) Blocks. These PLLs have multiply, divide and phase shifting capability; they are used to manage the phase relationship of the clocks. The LatticeXP architecture provides up to four PLLs per device.

Every device in the family has a JTAG Port with internal Logic Analyzer (ispTRACY) capability. The sysCONFIG port which allows for serial or parallel device configuration. The LatticeXP devices are available for operation from 3.3V, 2.5V, 1.8V and 1.2V power supplies, providing easy integration into the overall system.

© 2005 Lattice Semiconductor Corp. All Lattice trademarks, registered trademarks, patents, and disclaimers are as listed at www.latticesemi.com/legal. All other brand or product names are trademarks or registered trademarks of their respective holders. The specifications and information herein are subject to change without notice.

Petitioners
Ex. 1067, p. 2-1

Figure 2-1. LatticeXP Top Level Block Diagram

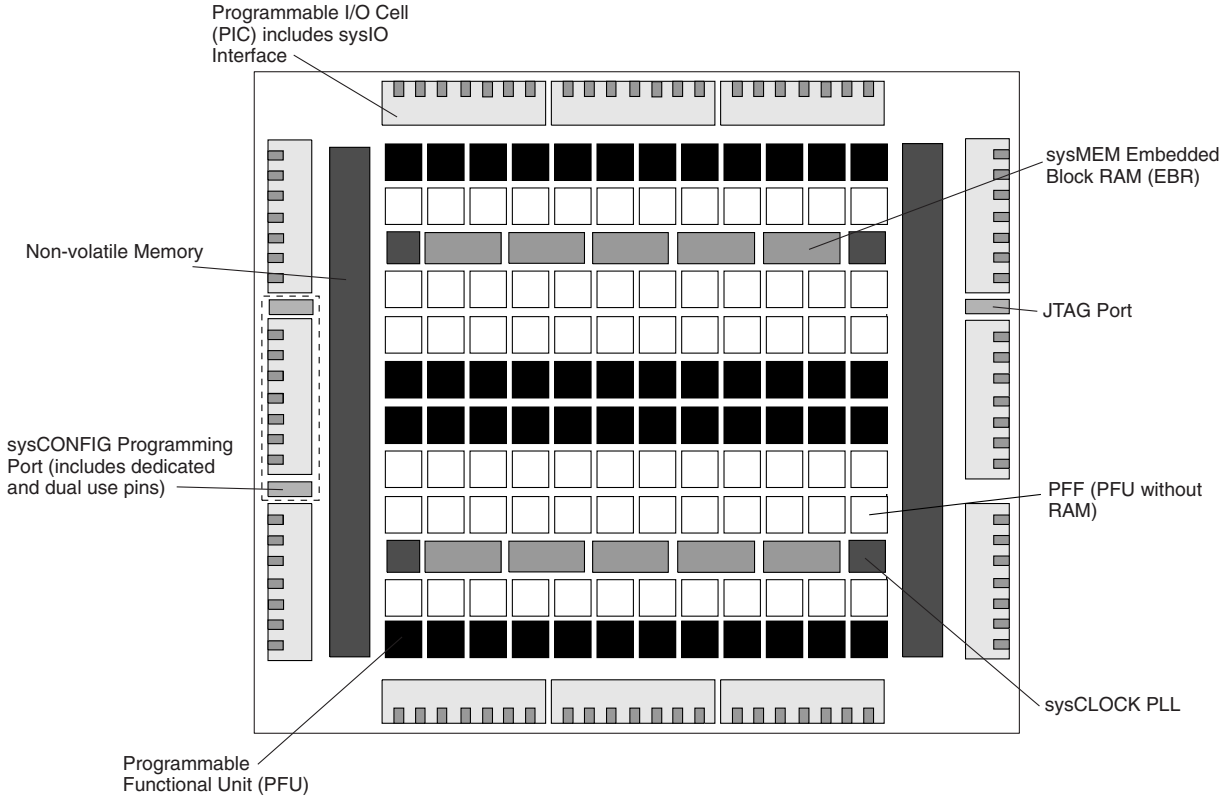

PFU and PFF Blocks

The core of the LatticeXP devices consists of PFU and PFF blocks. The PFUs can be programmed to perform Logic, Arithmetic, Distributed RAM and Distributed ROM functions. PFF blocks can be programmed to perform Logic, Arithmetic and ROM functions. Except where necessary, the remainder of the data sheet will use the term PFU to refer to both PFU and PFF blocks.

Each PFU block consists of four interconnected slices, numbered 0-3 as shown in Figure 2-2. All the interconnections to and from PFU blocks are from routing. There are 53 inputs and 25 outputs associated with each PFU block.

Figure 2-2. PFU Diagram

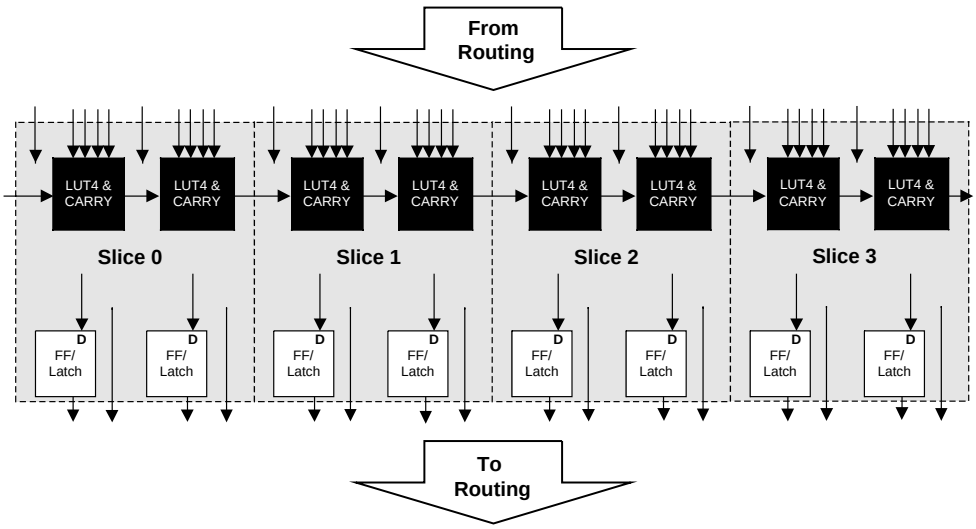

Petitioners
Ex. 1067, p. 2-2

Slice

Each slice contains two LUT4 lookup tables feeding two registers (programmed to be in FF or Latch mode), and some associated logic that allows the LUTs to be combined to perform functions such as LUT5, LUT6, LUT7 and LUT8. There is control logic to perform set/reset functions (programmable as synchronous/asynchronous), clock select, chip-select and wider RAM/ROM functions. Figure 2-3 shows an overview of the internal logic of the slice. The registers in the slice can be configured for positive/negative and edge/level clocks.

There are 14 input signals: 13 signals from routing and one from the carry-chain (from adjacent slice or PFU). There are 7 outputs: 6 to routing and one to carry-chain (to adjacent PFU). Table 2-1 lists the signals associated with each slice.

Figure 2-3. Slice Diagram

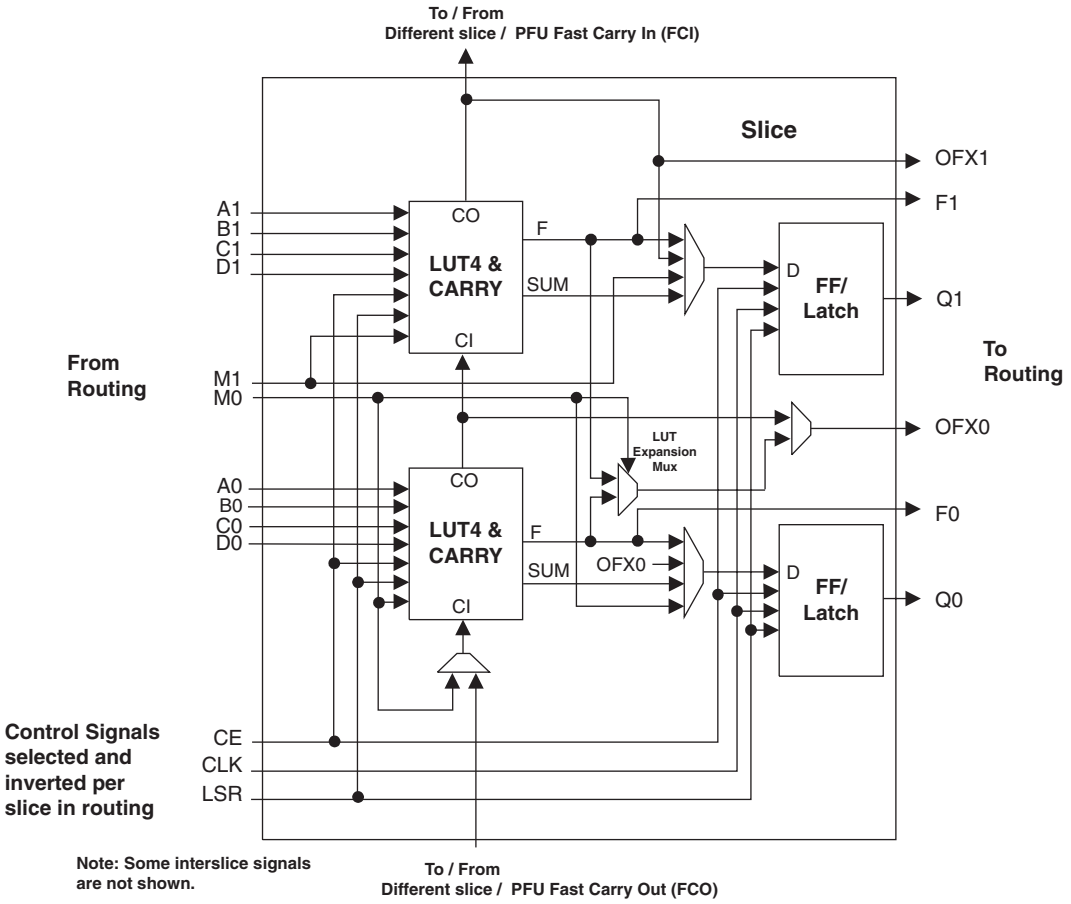

Petitioners
Ex. 1067, p. 2-3

Table 2-1. Slice Signal Descriptions

Function	Type	Signal Names	Description
Input	Data signal	A0, B0, C0, D0	Inputs to LUT4
Input	Data signal	A1, B1, C1, D1	Inputs to LUT4
Input	Multi-purpose	M0	Multipurpose Input
Input	Multi-purpose	M1	Multipurpose Input
Input	Control signal	CE	Clock Enable
Input	Control signal	LSR	Local Set/Reset
Input	Control signal	CLK	System Clock
Input	Inter-PFU signal	FCIN	Fast Carry In[1]
Output	Data signals	F0, F1	LUT4 output register bypass signals
Output	Data signals	Q0, Q1	Register Outputs
Output	Data signals	OFX0	Output of a LUT5 MUX
Output	Data signals	OFX1	Output of a LUT6, LUT7, LUT8[2] MUX depending on the slice
Output	Inter-PFU signal	FCO	For the right most PFU the fast carry chain output[1]

1. See Figure 2-2 for connection details.
2. Requires two PFUs.

Modes of Operation

Each Slice is capable of four modes of operation: Logic, Ripple, RAM and ROM. The Slice in the PFF is capable of all modes except RAM. Table 2-2 lists the modes and the capability of the Slice blocks.

Table 2-2. Slice Modes

	Logic	Ripple	RAM	ROM
PFU Slice	LUT 4x2 or LUT 5x1	2-bit Arithmetic Unit	SP 16x2	ROM 16x1 x 2
PFF Slice	LUT 4x2 or LUT 5x1	2-bit Arithmetic Unit	N/A	ROM 16x1 x 2

Logic Mode: In this mode, the LUTs in each Slice are configured as 4-input combinatorial lookup tables. A LUT4 can have 16 possible input combinations. Any logic function with four inputs can be generated by programming this lookup table. Since there are two LUT4s per Slice, a LUT5 can be constructed within one Slice. Larger lookup tables such as LUT6, LUT7 and LUT8 can be constructed by concatenating other Slices.

Ripple Mode: Ripple mode allows the efficient implementation of small arithmetic functions. In ripple mode, the following functions can be implemented by each Slice:

- Addition 2-bit
- Subtraction 2-bit
- Add/Subtract 2-bit using dynamic control
- Up counter 2-bit
- Down counter 2-bit
- Ripple mode multiplier building block
- Comparator functions of A and B inputs
  - A greater-than-or-equal-to B
  - A not-equal-to B
  - A less-than-or-equal-to B

Two additional signals: Carry Generate and Carry Propagate are generated per Slice in this mode, allowing fast arithmetic functions to be constructed by concatenating Slices.

RAM Mode: In this mode, distributed RAM can be constructed using each LUT block as a 16x1-bit memory. Through the combination of LUTs and Slices, a variety of different memories can be constructed.

Petitioners
Ex. 1067, p. 2-4

The Lattice design tools support the creation of a variety of different size memories. Where appropriate, the software will construct these using distributed memory primitives that represent the capabilities of the PFU. Table 2-3 shows the number of Slices required to implement different distributed RAM primitives. Figure 2-4 shows the distributed memory primitive block diagrams. Dual port memories involve the pairing of two Slices, one Slice functions as the read-write port. The other companion Slice supports the read-only port. For more information on RAM mode in LatticeXP devices, please see details of additional technical documentation at the end of this data sheet.

Table 2-3. Number of Slices Required for Implementing Distributed RAM

	SPR16x2	DPR16x2
Number of Slices	1	2

Note: SPR = Single Port RAM, DPR = Dual Port RAM

Figure 2-4. Distributed Memory Primitives

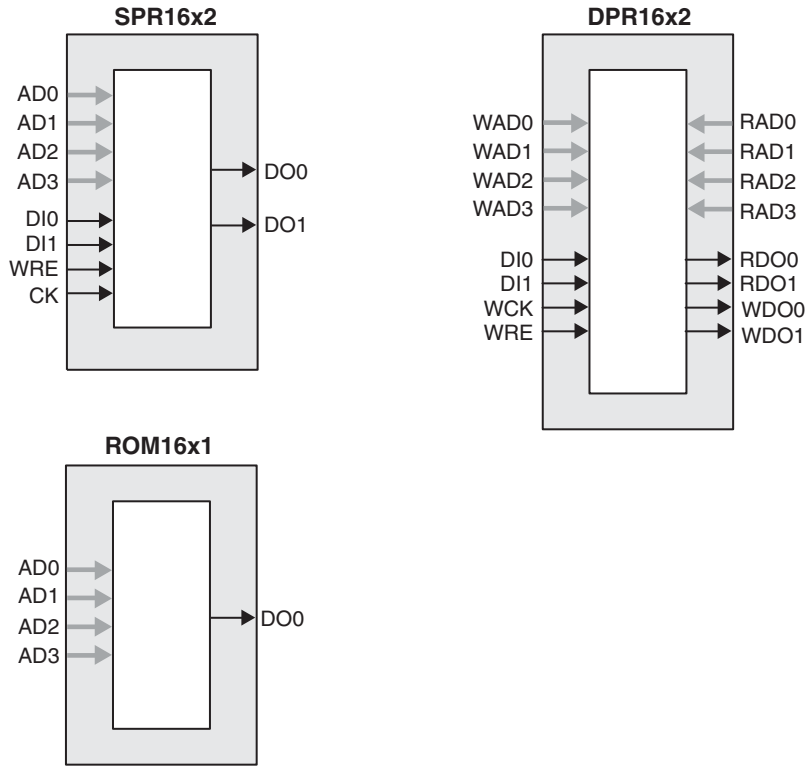

ROM Mode: The ROM mode uses the same principal as the RAM modes, but without the Write port. Pre-loading is accomplished through the programming interface during configuration.

PFU Modes of Operation

Slices can be combined within a PFU to form larger functions. Table 2-4 tabulates these modes and documents the functionality possible at the PFU level.

Petitioners
Ex. 1067, p. 2-5

Table 2-4. PFU Modes of Operation

Logic	Ripple	RAM[1]	ROM
LUT 4x8 or MUX 2x1 x 8	2-bit Add x 4	SPR16x2 x 4 DPR16x2 x 2	ROM16x1 x 8
LUT 5x4 or MUX 4x1 x 4	2-bit Sub x 4	SPR16x4 x 2 DPR16x4 x 1	ROM16x2 x 4
LUT 6x 2 or MUX 8x1 x 2	2-bit Counter x 4	SPR16x8 x 1	ROM16x4 x 2
LUT 7x1 or MUX 16x1 x 1	2-bit Comp x 4		ROM16x8 x 1

1. These modes are not available in PFF blocks

Routing

There are many resources provided in the LatticeXP devices to route signals individually or as buses with related control signals. The routing resources consist of switching circuitry, buffers and metal interconnect (routing) segments.

The inter-PFU connections are made with x1 (spans two PFU), x2 (spans three PFU) and x6 (spans seven PFU). The x1 and x2 connections provide fast and efficient connections in horizontal, vertical and diagonal directions. The x2 and x6 resources are buffered allowing both short and long connections routing between PFUs.

The ispLEVER design tool takes the output of the synthesis tool and places and routes the design. Generally, the place and route tool is completely automatic, although an interactive routing editor is available to optimize the design.

Clock Distribution Network

The clock inputs are selected from external I/O, the sysCLOCK™ PLLs or routing. These clock inputs are fed through the chip via a clock distribution system.

Primary Clock Sources

LatticeXP devices derive clocks from three primary sources: PLL outputs, dedicated clock inputs and routing. LatticeXP devices have two to four sysCLOCK PLLs, located on the left and right sides of the device. There are four dedicated clock inputs, one on each side of the device. Figure 2-5 shows the 20 primary clock sources.

Petitioners
Ex. 1067, p. 2-6

Figure 2-5. Primary Clock Sources

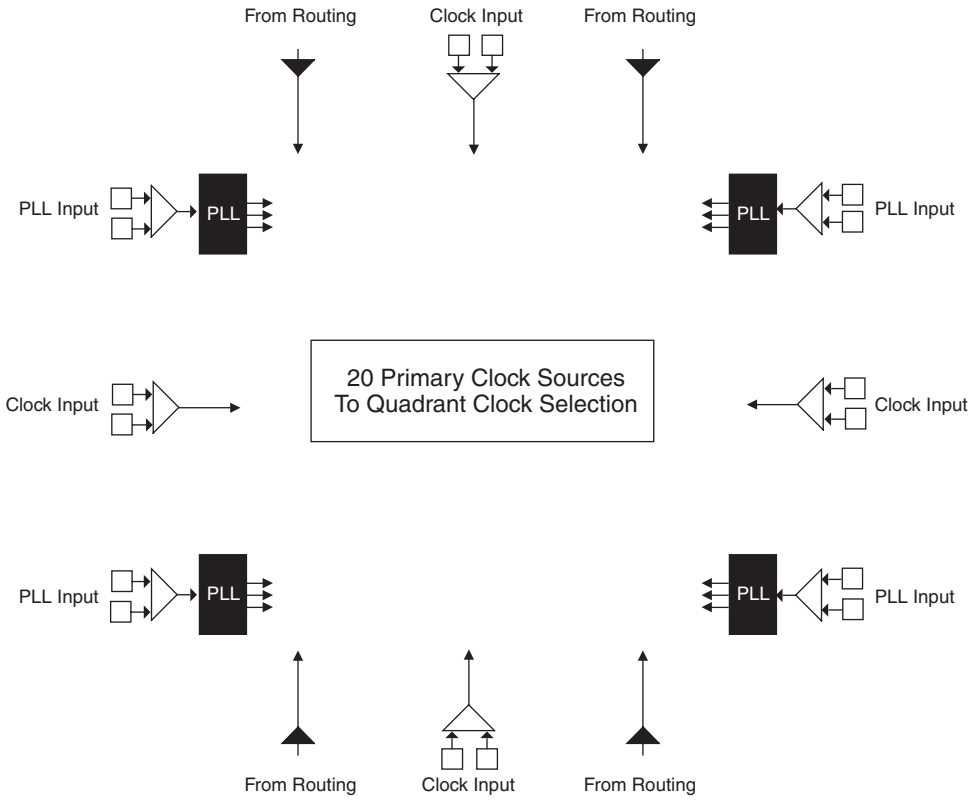

Note: Smaller devices have two PLLs.

Secondary Clock Sources

LatticeXP devices have four secondary clock resources per quadrant. The secondary clock branches are tapped at every PFU. These secondary clock networks can also be used for controls and high fanout data. These secondary clocks are derived from four clock input pads and 16 routing signals as shown in Figure 2-6.

Petitioners
Ex. 1067, p. 2-7

Figure 2-6. Secondary Clock Sources

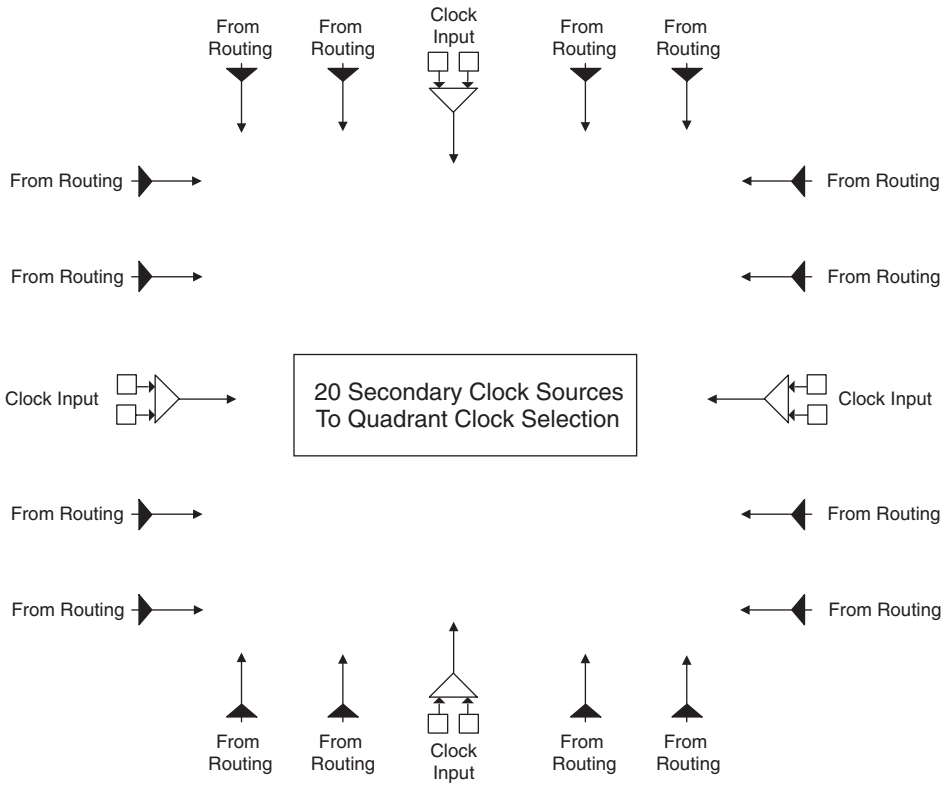

Clock Routing

The clock routing structure in LatticeXP devices consists of four Primary Clock lines and a Secondary Clock network per quadrant. The primary clocks are generated from MUXs located in each quadrant. Figure 2-7 shows this clock routing. The four secondary clocks are generated from MUXs located in each quadrant as shown in Figure 2-8. Each slice derives its clock from the primary clock lines, secondary clock lines and routing as shown in Figure 2-9.

Figure 2-7. Per Quadrant Primary Clock Selection

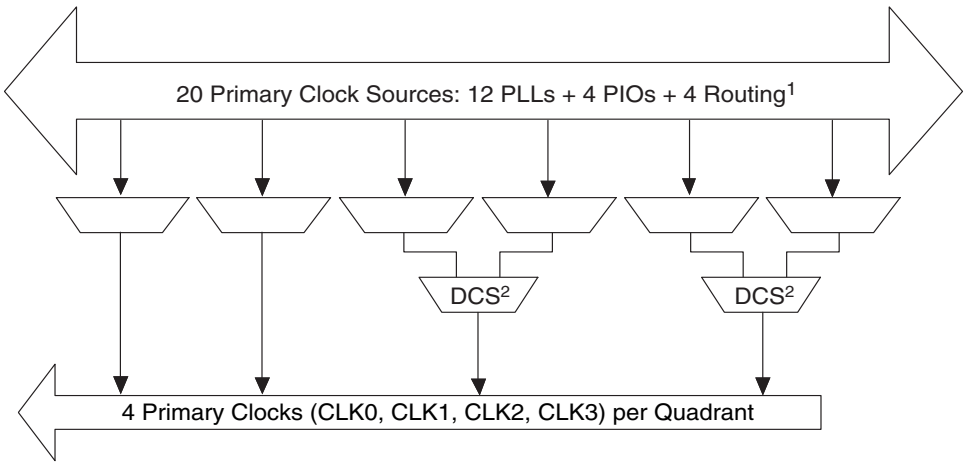

1. Smaller devices have fewer PLL related lines.
2. Dynamic clock select.

Petitioners
Ex. 1067, p. 2-8

Figure 2-8. Per Quadrant Secondary Clock Selection

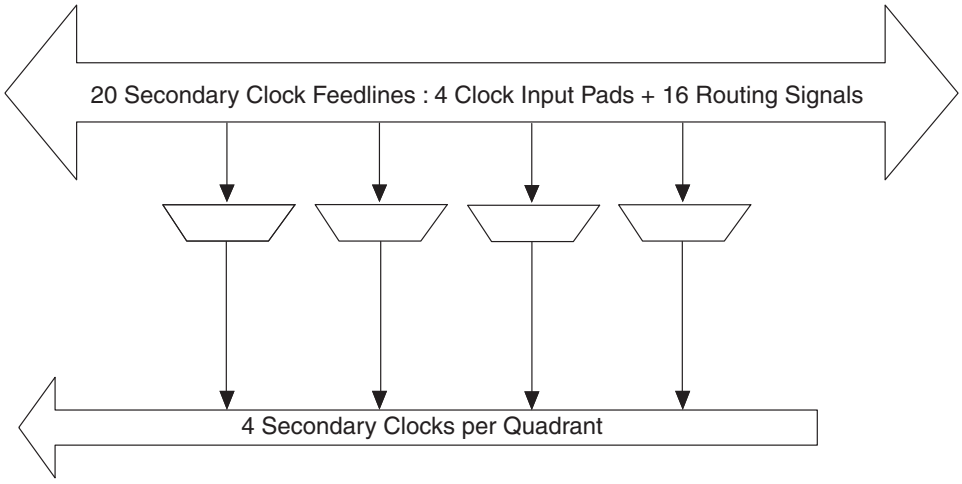

Figure 2-9. Slice Clock Selection

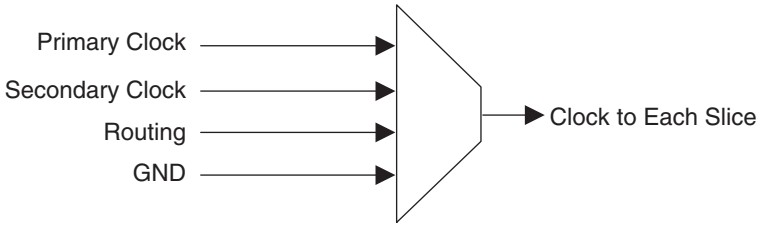

sysCLOCK Phase Locked Loops (PLLs)

The PLL clock input, from pin or routing, feeds into an input clock divider. There are three sources of feedback signals to the feedback divider: from CLKOP (PLL internal), from clock net (CLKOP or CLKOS) or from a user clock (PIN or logic). There is a PLL_LOCK signal to indicate that VCO has locked on to the input clock signal. Figure 2-10 shows the sysCLOCK PLL diagram.

The setup and hold times of the device can be improved by programming a delay in the feedback or input path of the PLL which will advance or delay the output clock with reference to the input clock. This delay can be either programmed during configuration or can be adjusted dynamically. In dynamic mode, the PLL may lose lock after adjustment and not relock until the t_{LOCK} parameter has been satisfied. Additionally, the phase and duty cycle block allows the user to adjust the phase and duty cycle of the CLKOS output.

The sysCLOCK PLLs provide the ability to synthesize clock frequencies. Each PLL has four dividers associated with it: input clock divider, feedback divider, post scalar divider and secondary clock divider. The input clock divider is used to divide the input clock signal, while the feedback divider is used to multiply the input clock signal. The post scalar divider allows the VCO to operate at higher frequencies than the clock output, thereby increasing the frequency range. The secondary divider is used to derive lower frequency outputs.

Petitioners
Ex. 1067, p. 2-9

Figure 2-10. PLL Diagram

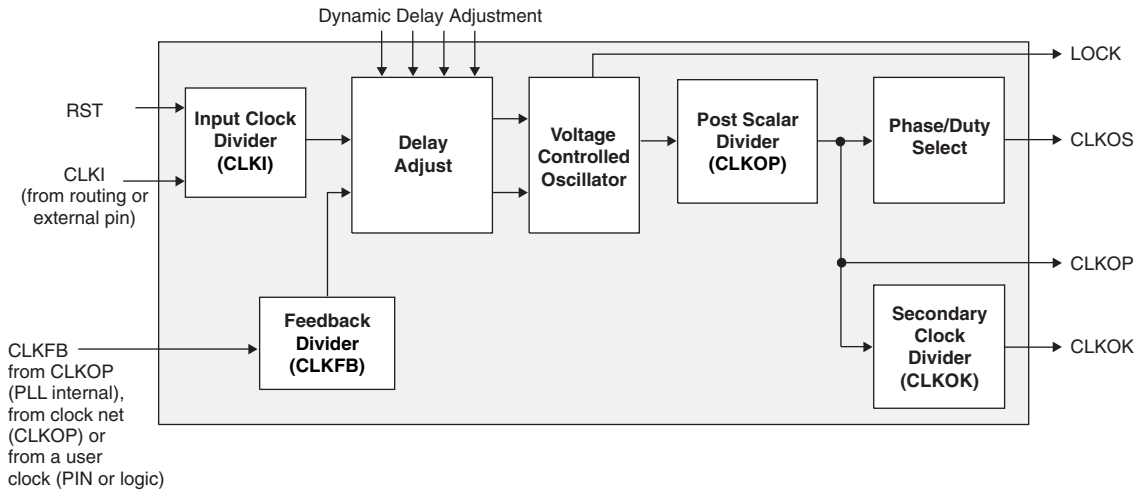

Figure 2-11 shows the available macros for the PLL. Table 2-11 provides signal description of the PLL Block.

Figure 2-11. PLL Primitive

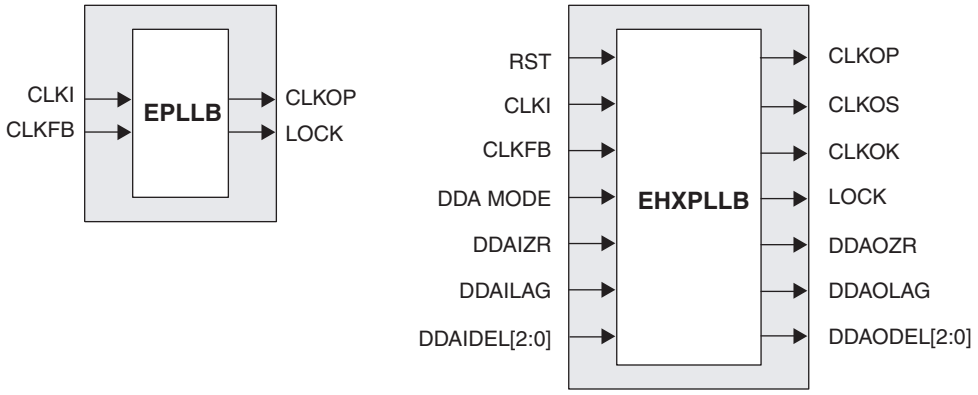

Table 2-5. PLL Signal Descriptions

Signal	I/O	Description
CLKI	I	Clock input from external pin or routing
CLKFB	I	PLL feedback input from CLKOP (PLL internal), from clock net (CLKOP) or from a user clock (PIN or logic)
RST	I	“1” to reset input clock divider
CLKOS	O	PLL output clock to clock tree (phase shifted/duty cycle changed)
CLKOP	O	PLL output clock to clock tree (No phase shift)
CLKOK	O	PLL output to clock tree through secondary clock divider
LOCK	O	“1” indicates PLL LOCK to CLKI
DDAMODE	I	Dynamic Delay Enable. “1” Pin control (dynamic), “0”: Fuse Control (static)
DDAIZR	I	Dynamic Delay Zero. “1”: delay = 0, “0”: delay = on
DDAILAG	I	Dynamic Delay Lag/Lead. “1”: Lag, “0”: Lead
DDAIDEL[2:0]	I	Dynamic Delay Input
DDAOZR	O	Dynamic Delay Zero Output
DDAOLAG	O	Dynamic Delay Lag/Lead Output
DDAODEL[2:0]	O	Dynamic Delay Output

Petitioners
Ex. 1067, p. 2-10

For more information on the PLL, please see details of additional technical documentation at the end of this data sheet.

Dynamic Clock Select (DCS)

The DCS is a global clock buffer with smart multiplexer functions. It takes two independent input clock sources and outputs a clock signal without any glitches or runt pulses. This is achieved irrespective of where the select signal is toggled. There are eight DCS blocks per device, located in pairs at the center of each side. Figure 2-12 illustrates the DCS Block Macro.

Figure 2-12. DCS Block Primitive

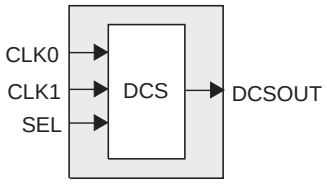

Figure 2-13 shows timing waveforms of the default DCS operating mode. The DCS block can be programmed to other modes. For more information on the DCS, please see details of additional technical documentation at the end of this data sheet.

Figure 2-13. DCS Waveforms

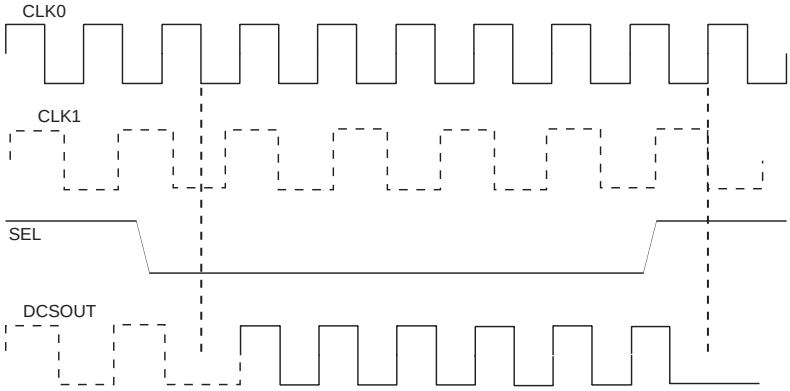

sysMEM Memory

The LatticeXP family of devices contain a number of sysMEM Embedded Block RAM (EBR). The EBR consists of a 9-Kbit RAM, with dedicated input and output registers.

sysMEM Memory Block

The sysMEM block can implement single port, dual port or pseudo dual port memories. Each block can be used in a variety of depths and widths as shown in Table 2-6.

Petitioners
Ex. 1067, p. 2-11

Table 2-6. sysMEM Block Configurations

Memory Mode	Configurations
Single Port	8,192 x 1 4,096 x 2 2,048 x 4 1,024 x 9 512 x 18 256 x 36
True Dual Port	8,192 x 1 4,096 x 2 2,048 x 4 1,024 x 9 512 x 18
Pseudo Dual Port	8,192 x 1 4,096 x 2 2,048 x 4 1,024 x 9 512 x 18 256 x 36

Bus Size Matching

All of the multi-port memory modes support different widths on each of the ports. The RAM bits are mapped LSB word 0 to MSB word 0, LSB word 1 to MSB word 1 and so on. Although the word size and number of words for each port varies, this mapping scheme applies to each port.

RAM Initialization and ROM Operation

If desired, the contents of the RAM can be pre-loaded during device configuration. By preloading the RAM block during the chip configuration cycle and disabling the write controls, the sysMEM block can also be utilized as a ROM.

Memory Cascading

Larger and deeper blocks of RAMs can be created using EBR sysMEM Blocks. Typically, the Lattice design tools cascade memory transparently, based on specific design inputs.

Single, Dual and Pseudo-Dual Port Modes

Figure 2-14 shows the four basic memory configurations and their input/output names. In all the sysMEM RAM modes the input data and address for the ports are registered at the input of the memory array. The output data of the memory is optionally registered at the output.

Petitioners
Ex. 1067, p. 2-12

Figure 2-14. sysMEM Memory Primitives

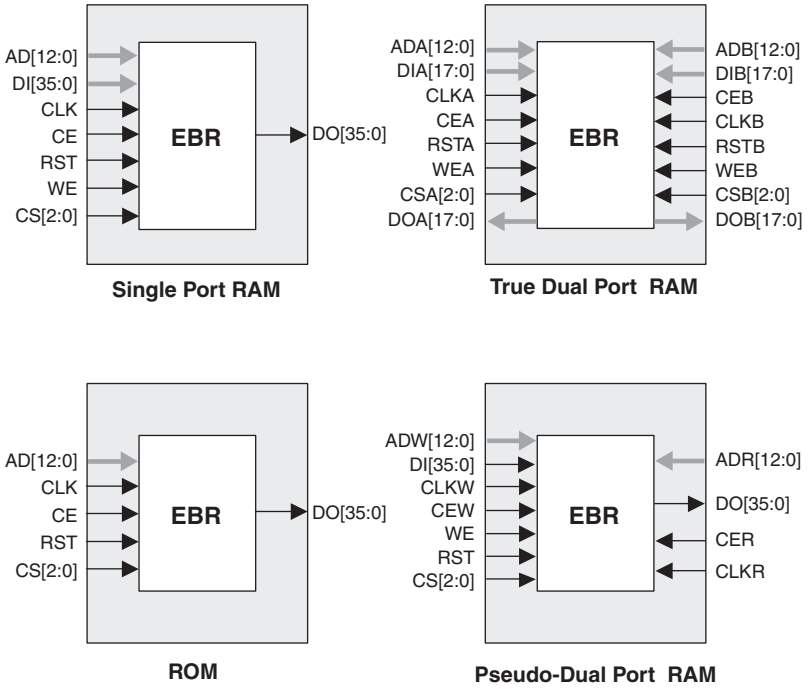

The EBR memory supports three forms of write behavior for single port or dual port operation:

1. **Normal** – data on the output appears only during read cycle. During a write cycle, the data (at the current address) does not appear on the output. This mode is supported for all data widths.

2. **Write Through** - a copy of the input data appears at the output of the same port during a write cycle. This mode is supported for all data widths.

3. **Read-Before-Write** – when new data is being written, the old content of the address appears at the output. This mode is supported for x9, x18 and x36 data widths.

Petitioners
Ex. 1067, p. 2-13

Memory Core Reset

The memory array in the EBR utilizes latches at the A and B output ports. These latches can be reset asynchronously. RSTA and RSTB are local signals, which reset the output latches associated with Port A and Port B respectively. The Global Reset (GSRN) signal resets both ports. The output data latches and associated resets for both ports are as shown in Figure 2-15.

Figure 2-15. Memory Core Reset

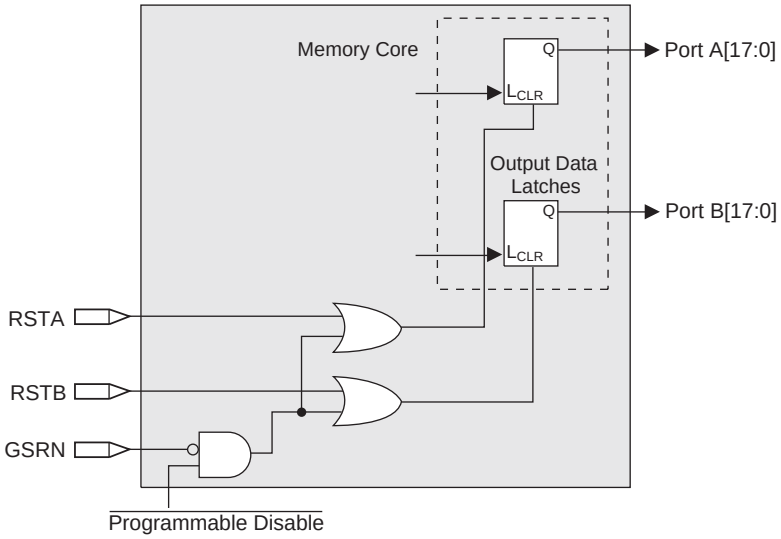

For further information on sysMEM EBR block, see the details of additional technical documentation at the end of this data sheet.

Petitioners
Ex. 1067, p. 2-14

Programmable I/O Cells (PICs)

Each PIC contains two PIOs connected to their respective sysIO Buffers which are then connected to the PADs as shown in Figure 2-16. The PIO Block supplies the output data (DO) and the Tri-state control signal (TO) to sysIO buffer, and receives input from the buffer.

Figure 2-16. PIC Diagram

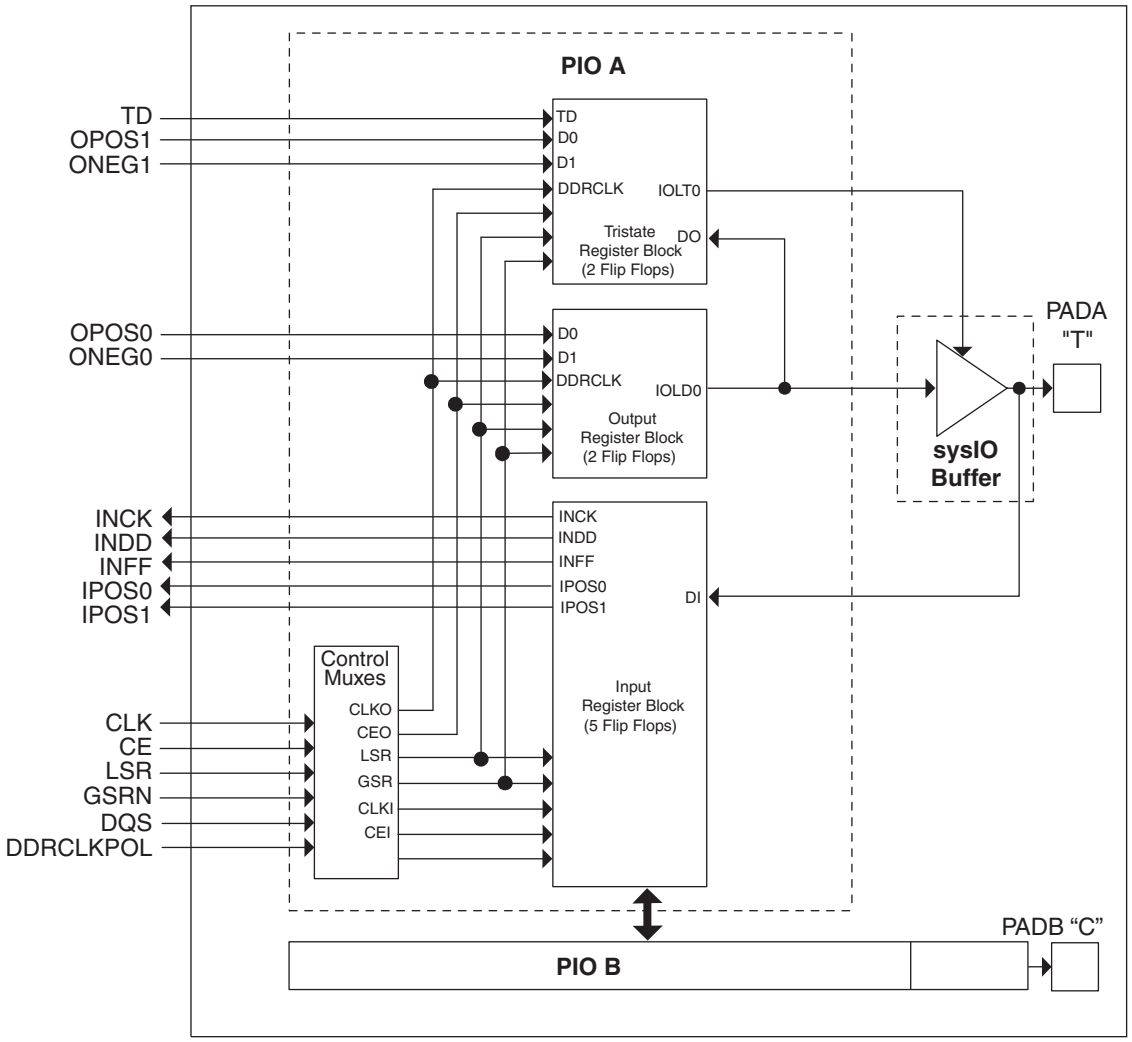

In the LatticeXP family, seven PIOs or four (3.5) PICs are grouped together to provide two LVDS differential pairs, one PIC pair and one single I/O, as shown in Figure 2-17.

Two adjacent PIOs can be joined to provide a differential I/O pair (labeled as “T” and “C”). The PAD Labels “T” and “C” distinguish the two PIOs. Only the PIO pairs on the left and right edges of the device can be configured as LVDS transmit/receive pairs.

One of every 14 PIOs (a group of 8 PICs) contains a delay element to facilitate the generation of DQS signals as shown in Figure 2-18. The DQS signal feeds the DQS bus which spans the set of 13 PIOs (8 PICs). The DQS signal from the bus is used to strobe the DDR data from the memory into input register blocks. This interface is designed for memories that support one DQS strobe per eight bits of data.

The exact DQS pins are shown in a dual function in the Logic Signal Connections table in this data sheet. Additional detail is provided in the Signal Descriptions table in this data sheet.

Petitioners
Ex. 1067, p. 2-15

Figure 2-17. Group of Seven PIOs

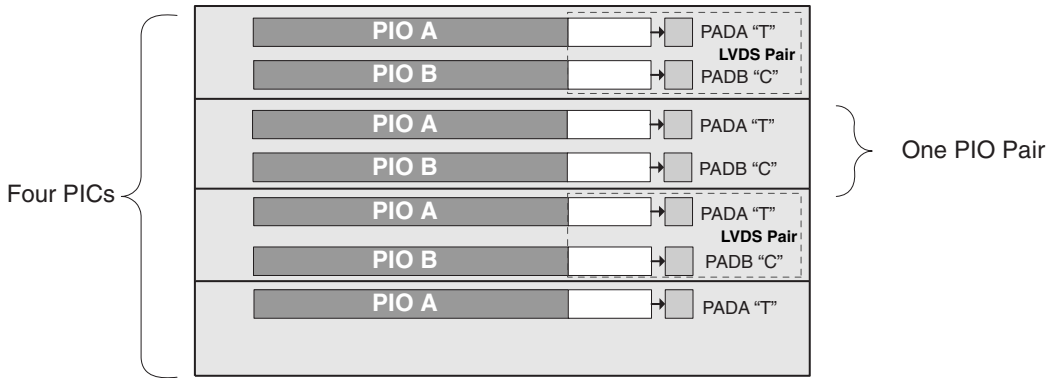

Figure 2-18. DQS Routing

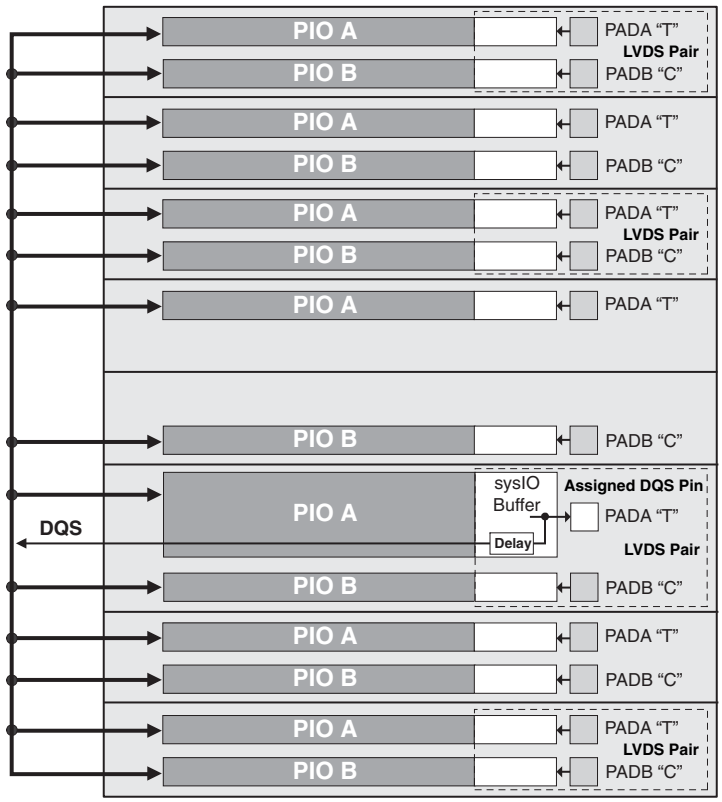

PIO

The PIO contains four blocks: an input register block, output register block, tristate register block and a control logic block. These blocks contain registers for both single data rate (SDR) and double data rate (DDR) operation along with the necessary clock and selection logic. Programmable delay lines used to shift incoming clock and data signals are also included in these blocks.

Input Register Block

The input register block contains delay elements and registers that can be used to condition signals before they are passed to the device core. Figure 2-19 shows the diagram of the input register block.

Input signals are fed from the sysIO buffer to the input register block (as signal DI). If desired the input signal can bypass the register and delay elements and be used directly as a combinatorial signal (INDD), a clock (INCK) and

Petitioners
Ex. 1067, p. 2-16

in selected blocks the input to the DQS delay block. If one of the bypass options is not chosen, the signal first passes through an optional delay block. This delay, if selected, ensures no positive input-register hold-time requirement when using a global clock.

The input block allows two modes of operation. In the single data rate (SDR) the data is registered, by one of the registers in the single data rate sync register block, with the system clock. In the DDR Mode two registers are used to sample the data on the positive and negative edges of the DQS signal creating two data streams, D0 and D2. These two data streams are synchronized with the system clock before entering the core. Further discussion on this topic is in the DDR Memory section of this data sheet.

Figure 2-20 shows the input register waveforms for DDR operation and Figure 2-21 shows the design tool primitives. The SDR/SYNC registers have reset and clock enable available.

The signal DDRCLKPOL controls the polarity of the clock used in the synchronization registers. It ensures adequate timing when data is transferred from the DQS to the system clock domain. For further discussion of this topic, see the DDR memory section of this data sheet.

Figure 2-19. Input Register Diagram

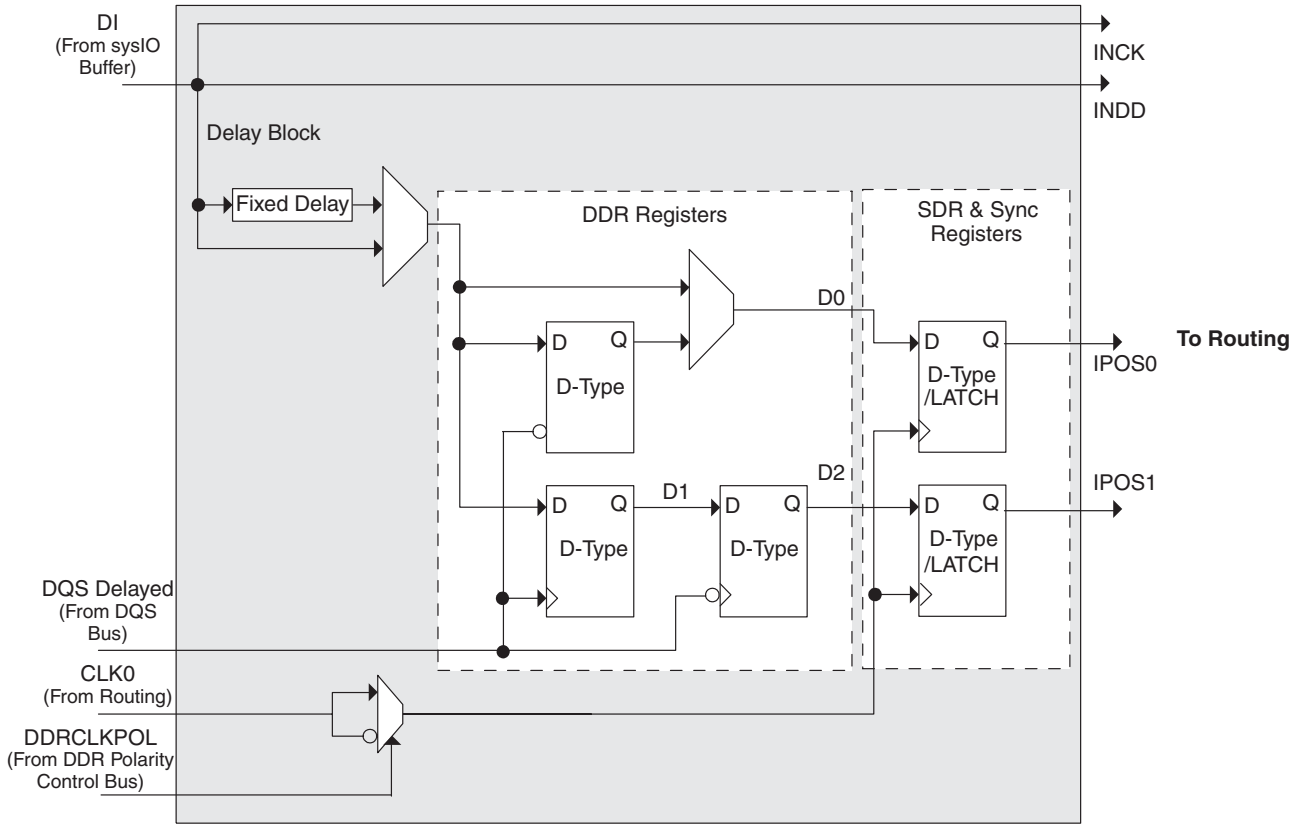

Petitioners
Ex. 1067, p. 2-17

Figure 2-20. Input Register DDR Waveforms

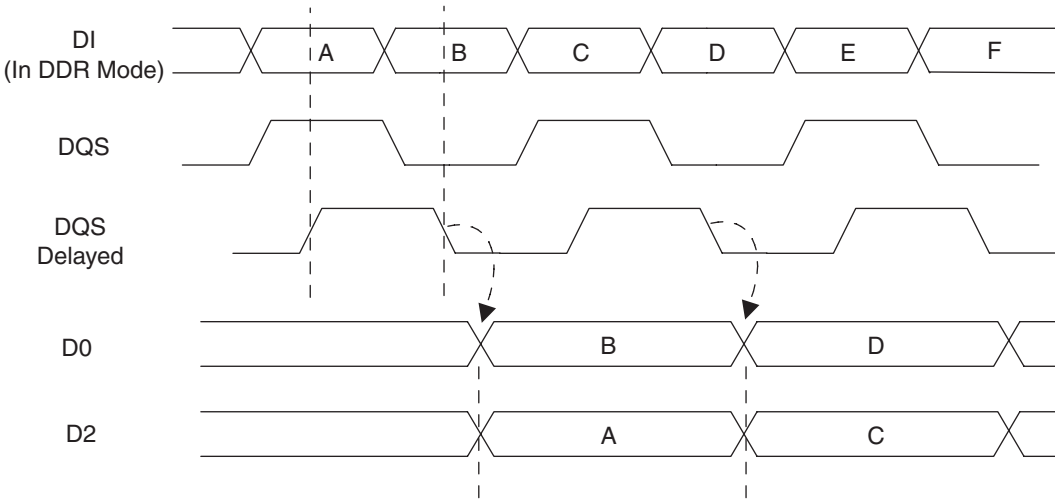

Figure 2-21. INDDRXB Primitive

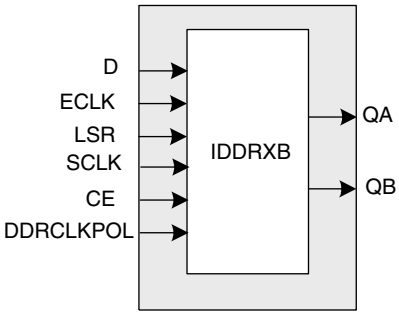

Output Register Block

The output register block provides the ability to register signals from the core of the device before they are passed to the sysIO buffers. The block contains a register for SDR operation that is combined with an additional latch for DDR operation. Figure 2-22 shows the diagram of the Output Register Block.

In SDR mode, ONEG0 feeds one of the flip-flops that then feeds the output. The flip-flop can be configured as a D-type or as a latch. In DDR mode, ONEG0 is fed into one register on the positive edge of the clock and OPOS0 is latched. A multiplexer running off the same clock selects the correct register for feeding to the output (D0).

Figure 2-23 shows the design tool DDR primitives. The SDR output register has reset and clock enable available. The additional register for DDR operation does not have reset or clock enable available.

Petitioners
Ex. 1067, p. 2-18

Figure 2-22. Output Register Block

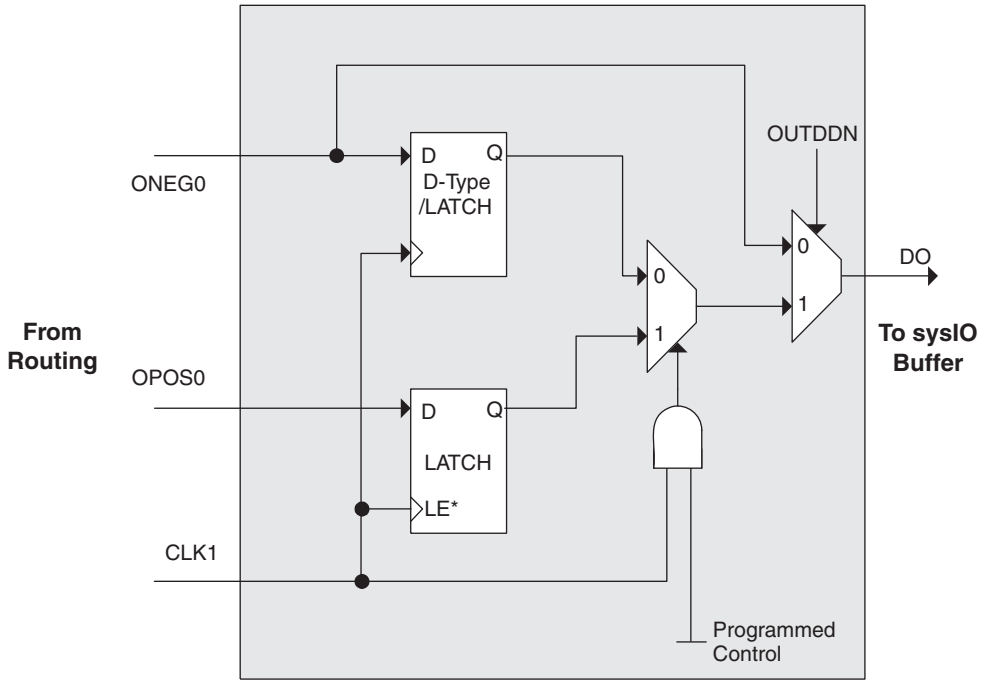

*Latch is transparent when input is low.

Figure 2-23. ODDRXB Primitive

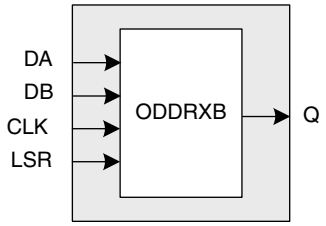

Tristate Register Block

The tristate register block provides the ability to register tri-state control signals from the core of the device before they are passed to the sysIO buffers. The block contains a register for SDR operation and an additional latch for DDR operation. Figure 2-24 shows the diagram of the Tristate Register Block.

In SDR mode, ONEG1 feeds one of the flip-flops that then feeds the output. The flip-flop can be configured a D-type or latch. In DDR mode, ONEG1 is fed into one register on the positive edge of the clock and OPOS1 is latched. A multiplexer running off the same clock selects the correct register for feeding to the output (D0).

Petitioners
Ex. 1067, p. 2-19

Figure 2-24. Tristate Register Block

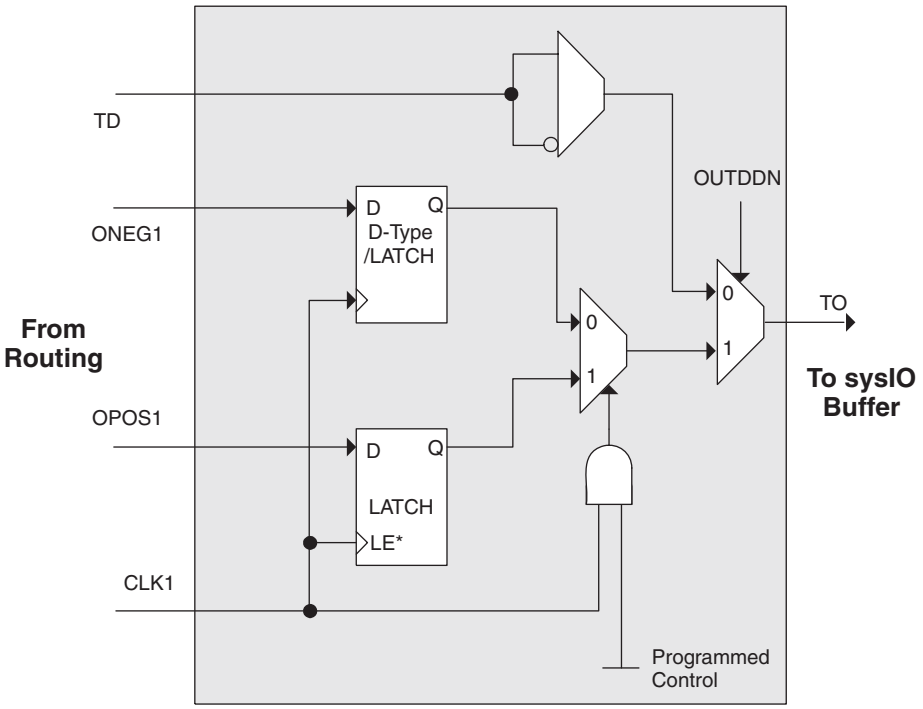

*Latch is transparent when input is low.

Control Logic Block

The control logic block allows the selection and modification of control signals for use in the PIO block. A clock is selected from one of the clock signals provided from the general purpose routing and a DQS signal provided from the programmable DQS pin. The clock can optionally be inverted.

The clock enable and local reset signals are selected from the routing and optionally inverted. The global tristate signal is passed through this block.

DDR Memory Support

Implementing high performance DDR memory interfaces requires dedicated DDR register structures in the input (for read operations) and in the output (for write operations). As indicated in the PIO Logic section, the LatticeXP devices provide this capability. In addition to these registers, the LatticeXP devices contain two elements to simplify the design of input structures for read operations: the DQS delay block and polarity control logic.

DLL Calibrated DQS Delay Block

Source Synchronous interfaces generally require the input clock to be adjusted in order to correctly capture data at the input register. For most interfaces a PLL is used for this adjustment, however in DDR memories the clock (referred to as DQS) is not free running so this approach cannot be used. The DQS Delay block provides the required clock alignment for DDR memory interfaces.

The DQS signal (selected PIOs only) feeds from the PAD through a DQS delay element to a dedicated DQS routing resource. The DQS signal also feeds the polarity control logic which controls the polarity of the clock to the sync registers in the input register blocks. Figures 2-25 and 2-26 show how the polarity control logic are routed to the PIOs.

The temperature, voltage and process variations of the DQS delay block are compensated by a set of calibration (6-bit bus) signals from two DLLs on opposite sides of the device. Each DLL compensates DQS Delays in its half of the device as shown in Figure 2-26. The DLL loop is compensated for temperature, voltage and process variations by the system clock and feedback loop.

Petitioners
Ex. 1067, p. 2-20

Figure 2-25. DQS Local Bus

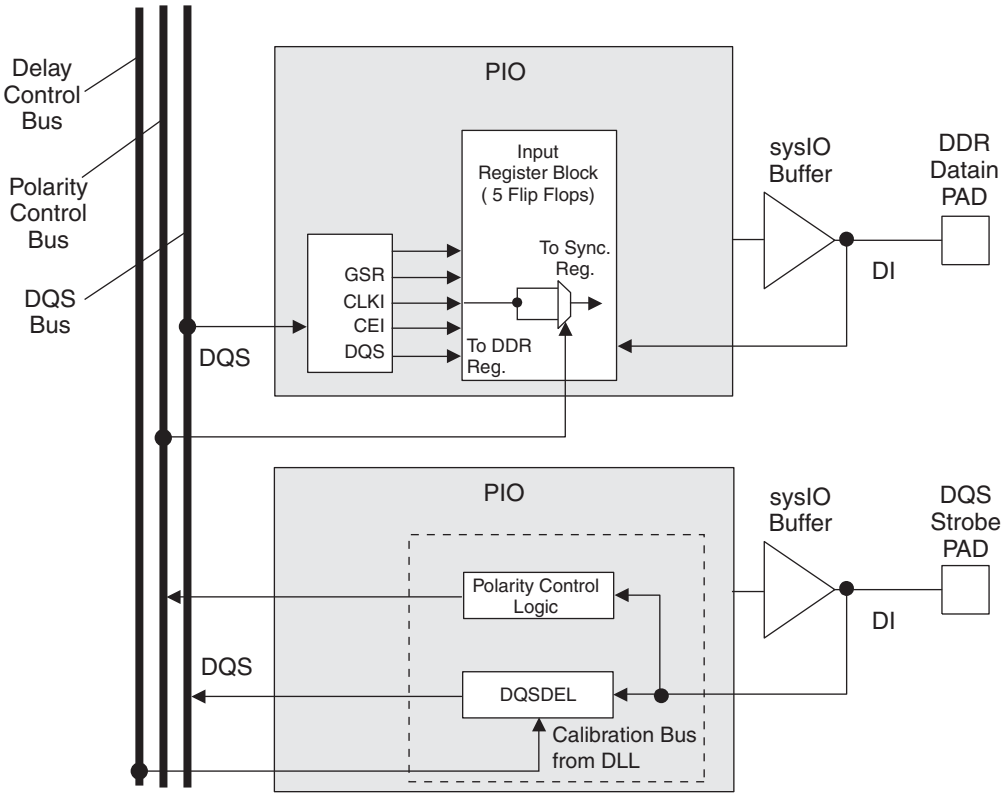

Figure 2-26. DLL Calibration Bus and DQS/DQS Transition Distribution

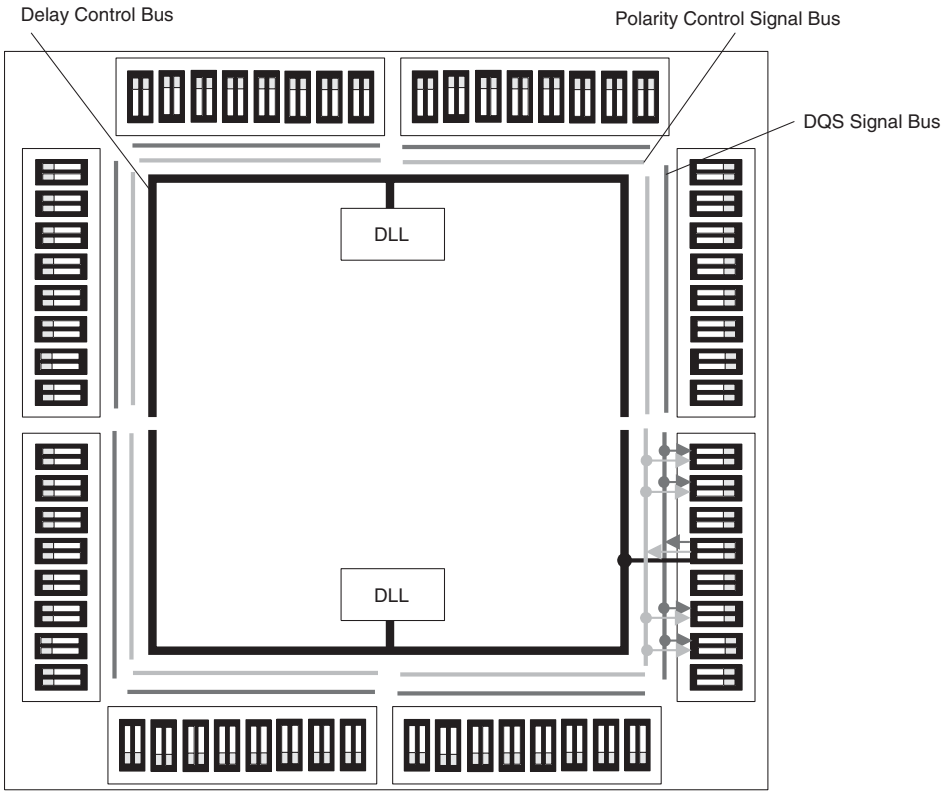

Petitioners
Ex. 1067, p. 2-21

Polarity Control Logic

In a typical DDR Memory interface design, the phase relation between the incoming delayed DQS strobe and the internal system Clock (during the READ cycle) is unknown.

The LatticeXP family contains dedicated circuits to transfer data between these domains. To prevent setup and hold violations at the domain transfer between DQS (delayed) and the system Clock a clock polarity selector is used. This changes the edge on which the data is registered in the synchronizing registers in the input register block. This requires evaluation at the start of the each READ cycle for the correct clock polarity.

Prior to the READ operation in DDR memories DQS is in tristate (pulled by termination). The DDR memory device drives DQS low at the start of the preamble state. A dedicated circuit detects this transition. This signal is used to control the polarity of the clock to the synchronizing registers.

sysIO Buffer

Each I/O is associated with a flexible buffer referred to as a sysIO buffer. These buffers are arranged around the periphery of the device in eight groups referred to as Banks. The sysIO buffers allow users to implement the wide variety of standards that are found in today's systems including LVCMOS, SSTL, HSTL, LVDS and LVPECL.

sysIO Buffer Banks

LatticeXP devices have eight sysIO buffer banks; each is capable of supporting multiple I/O standards. Each sysIO bank has its own I/O supply voltage (V_{CCIO}), and two voltage references V_{REF1} and V_{REF2} resources allowing each bank to be completely independent from each other. Figure 2-27 shows the eight banks and their associated supplies.

In the LatticeXP devices, single-ended output buffers and ratioed input buffers (LVTTL, LVCMOS, PCI and PCI-X) are powered using V_{CCIO}. LVTTL, LVCMOS33, LVCMOS25 and LVCMOS12 can also be set as a fixed threshold input independent of $V_{CCIO.}$ In addition to the bank V_{CCIO} supplies, the LatticeXP devices have a V_{CC} core logic power supply, and a V_{CCAUX} supply that power all differential and referenced buffers.

Each bank can support up to two separate VREF voltages, VREF1 and VREF2 that set the threshold for the referenced input buffers. In the LatticeXP devices, a dedicated pin in a bank can be configured to be a reference voltage supply pin. Each I/O is individually configurable based on the bank's supply and reference voltages.

Petitioners
Ex. 1067, p. 2-22

Figure 2-27. LatticeXP Banks

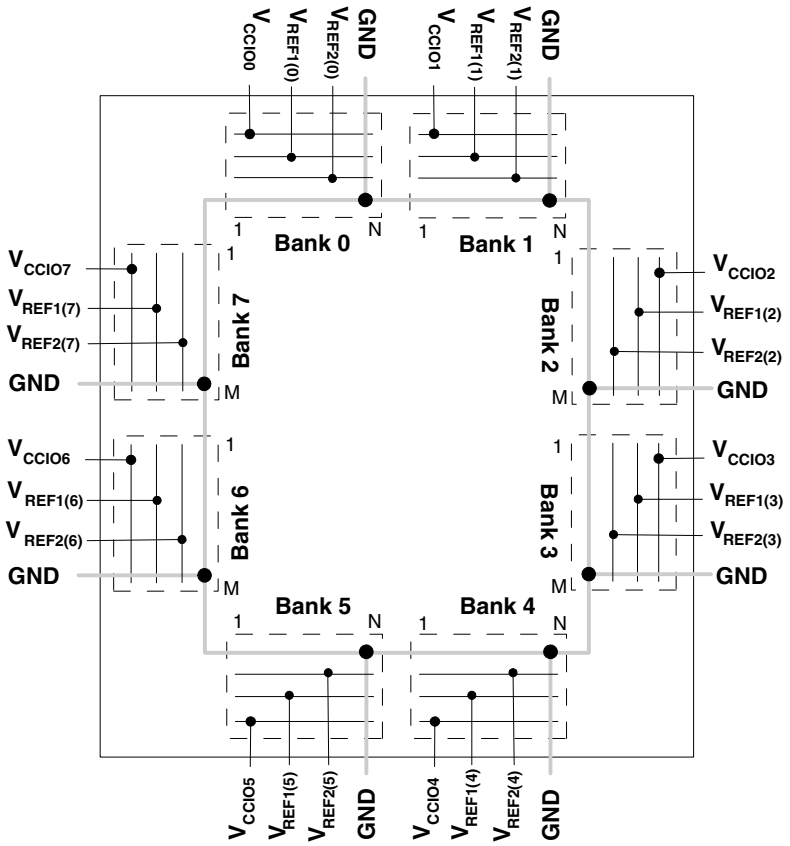

Note: N and M are the maximum number of I/Os per bank.

LatticeXP devices contain two types of sysIO buffer pairs.

1. **Top and Bottom sysIO Buffer Pair (Single-Ended Outputs Only)**
   The sysIO buffer pairs in the top and bottom banks of the device consist of two single-ended output drivers and two sets of single-ended input buffers (both ratioed and referenced). The referenced input buffer can also be configured as a differential input.

   The two pads in the pair are described as “true” and “comp”, where the true pad is associated with the positive side of the differential input buffer and the comp (complementary) pad is associated with the negative side of the differential input buffer.

   Only the I/Os on the top and bottom banks have PCI clamps. Note that the PCI clamp is enabled after $V_{CC,}$ V_{CCAUX} and V_{CCIO} are at valid operating levels and the device has been configured.

2. **Left and Right sysIO Buffer Pair (Differential and Single-Ended Outputs)**
   The sysIO buffer pairs in the left and right banks of the device consist of two single-ended output drivers, two sets of single-ended input buffers (both ratioed and referenced) and one differential output driver. The referenced input buffer can also be configured as a differential input. In these banks the two pads in the pair are described as “true” and “comp”, where the true pad is associated with the positive side of the differential I/O, and the comp (complementary) pad is associated with the negative side of the differential I/O.

   Only the left and right banks have LVDS differential output drivers.

Petitioners
Ex. 1067, p. 2-23

Typical I/O Behavior During Power-up

The internal power-on-reset (POR) signal is deactivated when V_{CC} and V_{CCAUX} have reached satisfactory levels. After the POR signal is deactivated, the FPGA core logic becomes active. It is the user's responsibility to ensure that all other V_{CCIO} banks are active with valid input logic levels to properly control the output logic states of all the I/O banks that are critical to the application. For more information on controlling the output logic state with valid input logic levels during power-up in LatticeXP devices, see details of additional technical documentation at the end of this data sheet.

The V_{CC} and V_{CCAUX} supply the power to the FPGA core fabric, whereas the V_{CCIO} supplies power to the I/O buffers. In order to simplify system design while providing consistent and predictable I/O behavior, it is recommended that the I/O buffers be powered-up prior to the FPGA core fabric. V_{CCIO} supplies should be powered up before or together with the V_{CC} and V_{CCAUX} supplies.

Supported Standards

The LatticeXP sysIO buffer supports both single-ended and differential standards. Single-ended standards can be further subdivided into LVCMOS, LVTTL and other standards. The buffers support the LVTTL, LVCMOS 1.2, 1.5, 1.8, 2.5 and 3.3V standards. In the LVCMOS and LVTTL modes, the buffer has individually configurable options for drive strength, bus maintenance (weak pull-up, weak pull-down, or a bus-keeper latch) and open drain. Other single-ended standards supported include SSTL and HSTL. Differential standards supported include LVDS, BLVDS, LVPECL, differential SSTL and differential HSTL. Tables 2-7 and 2-8 show the I/O standards (together with their supply and reference voltages) supported by the LatticeXP devices. For further information on utilizing the sysIO buffer to support a variety of standards please see the details of additional technical documentation at the end of this data sheet.

Table 2-7. Supported Input Standards

Input Standard	V_{REF} (Nom.)	V_{CCIO}[1] (Nom.)
Single Ended Interfaces		
LVTTL	—	—
LVCMOS33[2]	—	—
LVCMOS25[2]	—	—
LVCMOS18	—	1.8
LVCMOS15	—	1.5
LVCMOS12[2]	—	—
PCI	—	3.3
HSTL18 Class I, II	0.9	—
HSTL18 Class III	1.08	—
HSTL15 Class I	0.75	—
HSTL15 Class III	0.9	—
SSTL3 Class I, II	1.5	—
SSTL2 Class I, II	1.25	—
SSTL18 Class I	0.9	—
Differential Interfaces		
Differential SSTL18 Class I	—	—
Differential SSTL2 Class I, II	—	—
Differential SSTL3 Class I, II	—	—
Differential HSTL15 Class I, III	—	—
Differential HSTL18 Class I, II, III	—	—
LVDS, LVPECL	—	—
BLVDS	—	—

1. When not specified V_{CCIO} can be set anywhere in the valid operating range.
2. JTAG inputs do not have a fixed threshold option and always follow V_{CCJ}.

Petitioners
Ex. 1067, p. 2-24

Table 2-8. Supported Output Standards

Output Standard	Drive	V_{CCIO} (Nom.)
Single-ended Interfaces		
LVTTL	4mA, 8mA, 12mA, 16mA, 20mA	3.3
LVCMOS33	4mA, 8mA, 12mA 16mA, 20mA	3.3
LVCMOS25	4mA, 8mA, 12mA 16mA, 20mA	2.5
LVCMOS18	4mA, 8mA, 12mA 16mA	1.8
LVCMOS15	4mA, 8mA	1.5
LVCMOS12	2mA, 6mA	1.2
LVCMOS33, Open Drain	4mA, 8mA, 12mA 16mA, 20mA	—
LVCMOS25, Open Drain	4mA, 8mA, 12mA 16mA, 20mA	—
LVCMOS18, Open Drain	4mA, 8mA, 12mA 16mA	—
LVCMOS15, Open Drain	4mA, 8mA	—
LVCMOS12, Open Drain	2mA. 6mA	—
PCI33	N/A	3.3
HSTL18 Class I, II, III	N/A	1.8
HSTL15 Class I, III	N/A	1.5
SSTL3 Class I, II	N/A	3.3
SSTL2 Class I, II	N/A	2.5
SSTL18 Class I	N/A	1.8
Differential Interfaces		
Differential SSTL3, Class I, II	N/A	3.3
Differential SSTL2, Class I, II	N/A	2.5
Differential SSTL18, Class I	N/A	1.8
Differential HSTL18, Class I, II, III	N/A	1.8
Differential HSTL15, Class I, III	N/A	1.5
LVDS	N/A	2.5
BLVDS[1]	N/A	2.5
LVPECL[1]	N/A	3.3

1. Emulated with external resistors.

Hot Socketing

The LatticeXP devices have been carefully designed to ensure predictable behavior during power-up and power-down. Power supplies can be sequenced in any order. During power up and power-down sequences, the I/Os remain in tristate until the power supply voltage is high enough to ensure reliable operation. In addition, leakage into I/O pins is controlled to within specified limits, which allows easy integration with the rest of the system. These capabilities make the LatticeXP ideal for many multiple power supply and hot-swap applications.

Sleep Mode

The LatticeXP “C” devices (V_{CC} = 1.8/2.5/3.3V) have a sleep mode that allows standby current to be reduced by up to three orders of magnitude during periods of system inactivity. Entry and exit to Sleep Mode is controlled by the SLEEPN pin.

During Sleep Mode, the FPGA logic is non-operational, registers and EBR contents are not maintained and I/Os are tri-stated. Do not enter Sleep Mode during device programming or configuration operation. In Sleep Mode, power supplies can be maintained in their normal operating range, eliminating the need for external switching of power supplies. Table 2-9 compares the characteristics of Normal, Off and Sleep Modes.

Petitioners
Ex. 1067, p. 2-25

Table 2-9. Characteristics of Normal, Off and Sleep Modes

Characteristic	Normal	Off	Sleep
SLEEPN Pin	High	—	Low
Static Icc	Typical <100mA	0	Typical <100uA
I/O Leakage	<10µA	<1mA	<10µA
Power Supplies VCC/VCCIO/VCCAUX	Normal Range	Off	Normal Range
Logic Operation	User Defined	Non Operational	Non operational
I/O Operation	User Defined	Tri-state	Tri-state
JTAG and Programming circuitry	Operational	Non-operational	Non-operational
EBR Contents and Registers	Maintained	Non-maintained	Non-maintained

SLEEPN Pin Characteristics

The SLEEPN pin behaves as an LVCMOS input with the voltage standard appropriate to the VCC supply for the device. This pin also has a weak pull-up typically in the order of 10µA along with a Schmidt trigger and glitch filter to prevent false triggering. An external pull-up to V_{CC} is recommended when Sleep Mode is not used to ensure the device stays in normal operation mode. Typically the device enters Sleep Mode several hundred ns after SLEEPN is held at a valid low and restarts normal operation as specified in the Sleep Mode Timing table. The AC and DC specifications portion of this data sheet show a detailed timing diagram.

Configuration and Testing

The following section describes the configuration and testing features of the LatticeXP family of devices.

IEEE 1149.1-Compliant Boundary Scan Testability

All LatticeXP devices have boundary scan cells that are accessed through an IEEE 1149.1 compliant test access port (TAP). This allows functional testing of the circuit board, on which the device is mounted, through a serial scan path that can access all critical logic nodes. Internal registers are linked internally, allowing test data to be shifted in and loaded directly onto test nodes, or test data to be captured and shifted out for verification. The test access port consists of dedicated I/Os: TDI, TDO, TCK and TMS. The test access port has its own supply voltage V_{CCJ} and can operate with LVCMOS3.3, 2.5, 1.8, 1.5 and 1.2 standards.

For more details on boundary scan test, please see information regarding additional technical documentation at the end of this data sheet.

Device Configuration

All LatticeXP devices contain two possible ports that can be used for device configuration and programming. The test access port (TAP), which supports serial configuration, and the sysCONFIG port that supports both byte-wide and serial configuration.

The non-volatile memory in the LatticeXP can be configured in three different modes:

- In sysCONFIG mode via the sysCONFIG port. Note this can also be done in background mode.
- In 1532 mode via the 1149.1 port.
- In background mode via the 1149.1 port. This allows the device to be operated while reprogramming takes place.

The SRAM configuration memory can be configured in three different ways:

- At power-up via the on-chip non-volatile memory.
- In 1532 mode via the 1149.1 port SRAM direct configuration.
- In sysCONFIG mode via the sysCONFIG port SRAM direct configuration.

Petitioners
Ex. 1067, p. 2-26

Figure 2-28 provides a pictorial representation of the different programming ports and modes available in the LatticeXP devices.

On power-up, the FPGA SRAM is ready to be configured with the sysCONFIG port active. The IEEE 1149.1 serial mode can be activated any time after power-up by sending the appropriate command through the TAP port.

Leave Alone I/O
When using 1532 mode for non-volatile memory programming, users may specify I/Os as high, low, tristated or held at current value. This provides excellent flexibility for implementing systems where reprogramming occurs on-the-fly.

TransFR (Transparent Field Reconfiguration)
TransFR (TFR) is a unique Lattice technology that allows users to update their logic in the field without interrupting system operation using a single ispVM command. See Lattice technical note #TN1087, *Minimizing System Interruption During Configuration Using TransFR Technology,* for details.

Security
The LatticeXP devices contain security bits that, when set, prevent the readback of the SRAM configuration and non-volatile memory spaces. Once set, the only way to clear security bits is to erase the memory space.

For more information on device configuration, please see details of additional technical documentation at the end of this data sheet.

Figure 2-28. ispXP Block Diagram

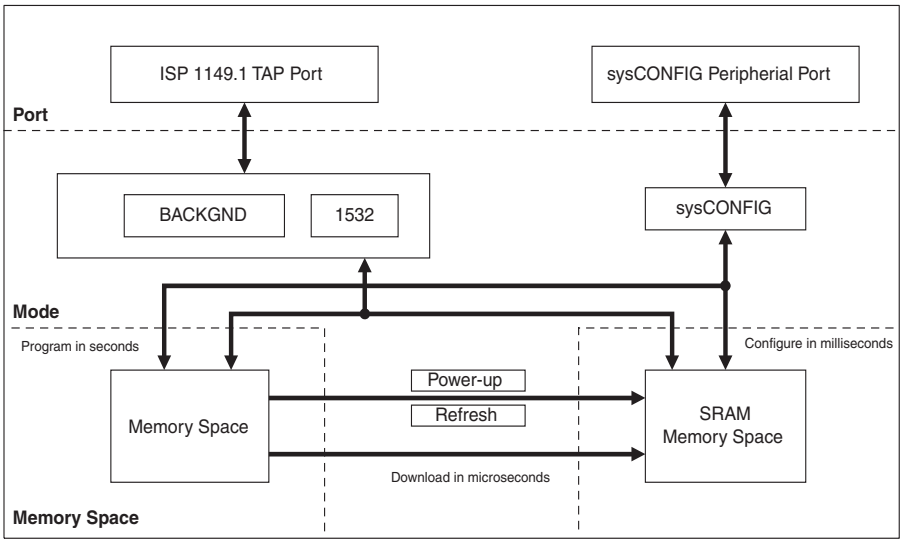

Internal Logic Analyzer Capability (ispTRACY)

All LatticeXP devices support an internal logic analyzer diagnostic feature. The diagnostic features provide capabilities similar to an external logic analyzer, such as programmable event and trigger condition and deep trace memory. This feature is enabled by Lattice's ispTRACY. The ispTRACY utility is added into the user design at compile time.

For more information on ispTRACY, please see information regarding additional technical documentation at the end of this data sheet.

Oscillator

Every LatticeXP device has an internal CMOS oscillator which is used to derive a master serial clock for configuration. The oscillator and the master serial clock run continuously in the configuration mode. The default value of the

Petitioners
Ex. 1067, p. 2-27

master serial clock is 2.5MHz. Table 2-10 lists all the available Master Serial Clock frequencies. When a different Master Serial Clock is selected during the design process, the following sequence takes place:

1. User selects a different Master Serial Clock frequency for configuration.
2. During configuration the device starts with the default (2.5MHz) Master Serial Clock frequency.
3. The clock configuration settings are contained in the early configuration bit stream.
4. The Master Serial Clock frequency changes to the selected frequency once the clock configuration bits are received.

For further information on the use of this oscillator for configuration, please see details of additional technical documentation at the end of this data sheet.

Table 2-10. Selectable Master Serial Clock (CCLK) Frequencies During Configuration

CCLK (MHz)	CCLK (MHz)	CCLK (MHz)
2.5[1]	13	45
4.3	15	51
5.4	20	55
6.9	26	60
8.1	30	130
9.2	34	—
10.0	41	—

1. Default

Density Shifting

The LatticeXP family has been designed to ensure that different density devices in the same package have the same pin-out. Furthermore, the architecture ensures a high success rate when performing design migration from lower density parts to higher density parts. In many cases, it is also possible to shift a lower utilization design targeted for a high-density device to a lower density device. However, the exact details of the final resource utilization will impact the likely success in each case.

Petitioners
Ex. 1067, p. 2-28

Absolute Maximum Ratings[1, 2, 3, 4]

	XPE (1.2V)	XPC (1.8V/2.5V/3.3V)
Supply Voltage V_{CC}	-0.5 to 1.32V	-0.5 to 3.75V
Supply Voltage V_{CCP}	-0.5 to 1.32V	-0.5 to 3.75V
Supply Voltage V_{CCAUX}	-0.5 to 3.75V	-0.5 to 3.75V
Supply Voltage V_{CCJ}	-0.5 to 3.75V	-0.5 to 3.75V
Output Supply Voltage V_{CCIO}	-0.5 to 3.75V	-0.5 to 3.75V
I/O Tristate Voltage Applied[5]	-0.5 to 3.75V	-0.5 to 3.75V
Dedicated Input Voltage Applied [5]	-0.5 to 3.75V	-0.5 to 4.25V
Storage Temperature (Ambient)	-65 to 150°C	-65 to 150°C
Junction Temp. (Tj)	+125°C	+125°C

1. Stress above those listed under the “Absolute Maximum Ratings” may cause permanent damage to the device. Functional operation of the device at these or any other conditions outside of those indicated in the operational sections of this specification is not implied.
2. Compliance with the Lattice *Thermal Management* document is required.
3. All voltages referenced to GND.
4. All chip grounds are connected together to a common package GND plane.
5. Overshoot and undershoot of -2V to (V_{IHMAX} + 2) volts is permitted for a duration of <20ns.

Recommended Operating Conditions[3]

Symbol	Parameter	Min.	Max.	Units
V_{CC}	Core Supply Voltage for 1.2V Devices	1.14	1.26	V
	Core Supply Voltage for 1.8V/2.5V/3.3V Devices	1.71	3.465	V
V_{CCP}	Supply Voltage for PLL for 1.2V Devices	1.14	1.26	V
	Supply Voltage for PLL for 1.8V/2.5V/3.3V Devices	1.71	3.465	V
V_{CCAUX}	Auxiliary Supply Voltage	3.135	3.465	V
V_{CCIO}[1, 2]	I/O Driver Supply Voltage	1.14	3.465	V
V_{CCJ}[1]	Supply Voltage for IEEE 1149.1 Test Access Port	1.14	3.465	V
t_{JCOM}	Junction Temperature, Commercial Operation	0	85	C
t_{JIND}	Junction Temperature, Industrial Operation	-40	100	C
$t_{JFLASHCOM}$	Junction Temperature, Flash Programming, Commercial	0	85	C
$t_{JFLASHIND}$	Junction Temperature, Flash Programming, Industrial	0	85	C

1. If V_{CCIO} or V_{CCJ} is set to 3.3V, they must be connected to the same power supply as $V_{CCAUX.}$ For the XPE devices (1.2V V_{CC}), if V_{CCIO} or V_{CCJ} is set to 1.2V, they must be connected to the same power supply as V_{CC}.
2. See recommended voltages by I/O standard in subsequent table.
3. The system designer must ensure that the FPGA design stays within the specified junction temperature and package thermal capabilities of the device based on the expected operating frequency, activity factor and environment conditions of the system.

© 2006 Lattice Semiconductor Corp. All Lattice trademarks, registered trademarks, patents, and disclaimers are as listed at www.latticesemi.com/legal. All other brand or product names are trademarks or registered trademarks of their respective holders. The specifications and information herein are subject to change without notice.

Petitioners
Ex. 1067, p. 3-1

Hot Socketing Specifications[1, 2, 3, 4, 5, 6]

Symbol	Parameter	Condition	Min.	Typ.	Max.	Units
I_{DK}	Input or I/O Leakage Current	$0 \le V_{IN} \le V_{IH}$ (MAX.)	—	—	+/-1000	µA

1. Insensitive to sequence of V_{CC}, V_{CCAUX} and V_{CCIO}. However, assumes monotonic rise/fall rates for V_{CC}, V_{CCAUX} and V_{CCIO}.
2. $0 \le V_{CC} \le V_{CC}$ (MAX) or $0 \le V_{CCAUX} \le V_{CCAUX}$ (MAX).
3. $0 \le V_{CCIO} \le V_{CCIO}$ (MAX) for top and bottom I/O banks.
4. $0.2 \le V_{CCIO} \le V_{CCIO}$ (MAX) for left and right I/O banks.
5. I_{DK} is additive to I_{PU}, I_{PW} or I_{BH}.
6. LVCMOS and LVTTL only.

Petitioners
Ex. 1067, p. 3-2

DC Electrical Characteristics

Over Recommended Operating Conditions

Symbol	Parameter	Condition	Min.	Typ.	Max.	Units
I_{IL}, I_{IH}[1, 2, 4]	Input or I/O Leakage	$0 \le V_{IN} \le (V_{CCIO} - 0.2V)$	—	—	10	µA
		$(V_{CCIO} - 0.2V) < V_{IN} \le 3.6V$	—	—	40	µA
I_{PU}	I/O Active Pull-up Current	$0 \le V_{IN} \le 0.7\ V_{CCIO}$	-30	—	-150	µA
I_{PD}	I/O Active Pull-down Current	V_{IL} (MAX) $\le V_{IN} \le V_{IH}$ (MAX)	30	—	150	µA
I_{BHLS}	Bus Hold Low sustaining current	$V_{IN} = V_{IL}$ (MAX)	30	—	—	µA
I_{BHHS}	Bus Hold High sustaining current	$V_{IN} = 0.7V_{CCIO}$	-30	—	—	µA
I_{BHLO}	Bus Hold Low Overdrive current	$0 \le V_{IN} \le V_{IH}$ (MAX)	—	—	150	µA
I_{BHHO}	Bus Hold High Overdrive current	$0 \le V_{IN} \le V_{IH}$ (MAX)	—	—	-150	µA
V_{BHT}	Bus Hold trip Points	$0 \le V_{IN} \le V_{IH}$ (MAX)	V_{IL} (MAX)	—	V_{IH} (MIN)	V
C1	I/O Capacitance[3]	V_{CCIO} = 3.3V, 2.5V, 1.8V, 1.5V, 1.2V, V_{CC} = 1.2V, V_{IO} = 0 to V_{IH} (MAX)	—	8	—	pf
C2	Dedicated Input Capacitance[3]	V_{CCIO} = 3.3V, 2.5V, 1.8V, 1.5V, 1.2V, V_{CC} = 1.2V, V_{IO} = 0 to V_{IH} (MAX)	—	8	—	pf

1. Input or I/O leakage current is measured with the pin configured as an input or as an I/O with the output driver tri-stated. It is not measured with the output driver active. Bus maintenance circuits are disabled.
2. Not applicable to SLEEPN/TOE pin.
3. T_A 25°C, f = 1.0MHz
4. When V_{IH} is higher than V_{CCIO}, a transient current typically of 30ns in duration or less with a peak current of 6mA can be expected on the high-to-low transition.

Supply Current (Sleep Mode)[1, 2, 3]

Symbol	Parameter	Device	Typ.[4]	Max	Units
I_{CC}	Core Power Supply	LFXP3C	12	65	µA
		LFXP6C	14	75	µA
		LFXP10C	16	85	µA
		LFXP15C	18	95	µA
		LFXP20C	20	105	µA
I_{CCP}	PLL Power Supply (per PLL)	All LFXP 'C' Devices	1	5	µA
I_{CCAUX}	Auxiliary Power Supply	LFXP3C	2	90	µA
		LFXP6C	2	100	µA
		LFXP10C	2	110	µA
		LFXP15C	3	120	µA
		LFXP20C	4	130	µA
I_{CCIO}	Bank Power Supply[5]	LFXP3C	2	20	µA
		LFXP6C	2	22	µA
		LFXP10C	2	24	µA
		LFXP15C	3	27	µA
		LFXP20C	4	30	µA
I_{CCJ}	VCCJ Power Supply	All LFXP 'C' Devices	1	5	µA

1. Assumes all inputs are configured as LVCMOS and held at the VCCIO or GND.
2. Frequency 0MHz.
3. User pattern: blank.
4. T_A=25°C, power supplies at nominal voltage.
5. Per bank.

Petitioners
Ex. 1067, p. 3-3

Supply Current (Standby)[1, 2, 3, 4]

Over Recommended Operating Conditions

Symbol	Parameter	Device	Typ.[5]	Units
I_{CC}	Core Power Supply	LFXP3E	15	mA
		LFXP6E	20	mA
		LFXP10E	35	mA
		LFXP15E	45	mA
		LFXP20E	55	mA
		LFXP3C	35	mA
		LFXP6C	40	mA
		LFXP10C	70	mA
		LFXP15C	80	mA
		LFXP20C	90	mA
I_{CCP}	PLL Power Supply (per PLL)	All	8	mA
I_{CCAUX}	Auxiliary Power Supply V_{CCAUX} = 3.3V	LFXP3E/C	22	mA
		LFXP6E/C	22	mA
		LFXP10E/C	30	mA
		LFXP15E/C	30	mA
		LFXP20E/C	30	mA
I_{CCIO}	Bank Power Supply[6]	All	2	mA
I_{CCJ}	V_{CCJ} Power Supply	All	1	mA

1. For further information on supply current, please see details of additional technical documentation at the end of this data sheet.
2. Assumes all outputs are tristated, all inputs are configured as LVCMOS and held at the VCCIO or GND.
3. Frequency 0MHz.
4. User pattern: blank.
5. T_A=25°C, power supplies at nominal voltage.
6. Per bank.

Petitioners
Ex. 1067, p. 3-4

Initialization Supply Current[1, 2, 3, 4, 5, 6]

Over Recommended Operating Conditions

Symbol	Parameter	Device	Typ.[7]	Units
I_{CC}	Core Power Supply	LFXP3E	40	mA
		LFXP6E	50	mA
		LFXP10E	110	mA
		LFXP15E	140	mA
		LFXP20E	250	mA
		LFXP3C	60	mA
		LFXP6C	70	mA
		LFXP10C	150	mA
		LFXP15C	180	mA
		LFXP20C	290	mA
I_{CCAUX}	Auxiliary Power Supply V_{CCAUX} = 3.3V	LFXP3E /C	50	mA
		LFXP6E /C	60	mA
		LFXP10E /C	90	mA
		LFXP15E /C	110	mA
		LFXP20E /C	130	mA
I_{CCJ}	V_{CCJ} Power Supply	All	2	mA

1. Until DONE signal is active.
2. For further information on supply current, please see details of additional technical documentation at the end of this data sheet.
3. Assumes all outputs are tristated, all inputs are configured as LVCMOS and held at the V_{CCIO} or GND.
4. Frequency 0MHz.
5. Typical user pattern.
6. Assume normal bypass capacitor/decoupling capacitor across the supply.
7. T_A=25°C, power supplies at nominal voltage.

Petitioners
Ex. 1067, p. 3-5

Programming and Erase Flash Supply Current[1, 2, 3, 4, 5]

Symbol	Parameter	Device	Typ[6]	Units
I_{CC}	Core Power Supply	LFXP3E	30	mA
		LFXP6E	40	mA
		LFXP10E	50	mA
		LFXP15E	60	mA
		LFXP20E	70	mA
		LFXP3C	50	mA
		LFXP6C	60	mA
		LFXP10C	90	mA
		LFXP15C	100	mA
		LFXP20C	110	mA
I_{CCAUX}	Auxiliary Power Supply V_{CCAUX} = 3.3V	LFXP3E /C	50	mA
		LFXP6E /C	60	mA
		LFXP10E /C	90	mA
		LFXP15E /C	110	mA
		LFXP20E /C	130	mA
I_{CCJ}	V_{CCJ} Power Supply[7]	All	2	mA

1. For further information on supply current, please see details of additional technical documentation at the end of this data sheet.
2. Assumes all outputs are tristated, all inputs are configured as LVCMOS and held at the V_{CCIO} or GND.
3. Blank user pattern; typical Flash pattern.
4. Bypass or decoupling capacitor across the supply.
5. JTAG programming is at 1MHz.
6. T_A=25°C, power supplies at nominal voltage.
7. When programming via JTAG.

Petitioners
Ex. 1067, p. 3-6

sysIO Recommended Operating Conditions

Standard	V_{CCIO}			V_{REF} (V)		
	Min.	Typ.	Max.	Min.	Typ.	Max.
LVCMOS 3.3	3.135	3.3	3.465	—	—	—
LVCMOS 2.5	2.375	2.5	2.625	—	—	—
LVCMOS 1.8	1.71	1.8	1.89	—	—	—
LVCMOS 1.5	1.425	1.5	1.575	—	—	—
LVCMOS 1.2	1.14	1.2	1.26	—	—	—
LVTTL	3.135	3.3	3.465	—	—	—
PCI33	3.135	3.3	3.465	—	—	—
SSTL18 Class I	1.71	1.8	1.89	0.833	0.9	0.969
SSTL2 Class I, II	2.375	2.5	2.625	1.15	1.25	1.35
SSTL3 Class I, II	3.135	3.3	3.465	1.3	1.5	1.7
HSTL15 Class I	1.425	1.5	1.575	0.68	0.75	0.9
HSTL15 Class III	1.425	1.5	1.575	—	0.9	—
HSTL 18 Class I, II	1.71	1.8	1.89	—	0.9	—
HSTL 18 Class III	1.71	1.8	1.89	—	1.08	—
LVDS	2.375	2.5	2.625	—	—	—
LVPECL[1]	3.135	3.3	3.465	—	—	—
BLVDS[1]	2.375	2.5	2.625	—	—	—

1. Inputs on chip. Outputs are implemented with the addition of external resistors.

Petitioners
Ex. 1067, p. 3-7

sysIO Single-Ended DC Electrical Characteristics

Input/Output Standard	V_{IL}		V_{IH}		V_{OL} Max. (V)	V_{OH} Min. (V)	I_{OL} (mA)	I_{OH} (mA)
	Min. (V)	Max. (V)	Min. (V)	Max. (V)				
LVCMOS 3.3	-0.3	0.8	2.0	3.6	0.4	V_{CCIO} - 0.4	20, 16, 12, 8, 4	-20, -16, -12, -8, -4
					0.2	V_{CCIO} - 0.2	0.1	-0.1
LVTTL	-0.3	0.8	2.0	3.6	0.4	V_{CCIO} - 0.4	20, 16, 12, 8, 4	-20, -16, -12, -8, -4
					0.2	V_{CCIO} - 0.2	0.1	-0.1
LVCMOS 2.5	-0.3	0.7	1.7	3.6	0.4	V_{CCIO} - 0.4	20, 16, 12, 8, 4	-20, -16, -12, -8, -4
					0.2	V_{CCIO} - 0.2	0.1	-0.1
LVCMOS 1.8	-0.3	$0.35V_{CCIO}$	$0.65V_{CCIO}$	3.6	0.4	V_{CCIO} - 0.4	16, 12, 8, 4	-16, -12, -8, -4
					0.2	V_{CCIO} - 0.2	0.1	-0.1
LVCMOS 1.5	-0.3	$0.35V_{CCIO}$	$0.65V_{CCIO}$	3.6	0.4	V_{CCIO} - 0.4	8, 4	-8, -4
					0.2	V_{CCIO} - 0.2	0.1	-0.1
LVCMOS 1.2	-0.3	$0.35V_{CCIO}$	$0.65V_{CCIO}$	3.6	0.4	V_{CCIO} - 0.4	6, 2	-6, -2
					0.2	V_{CCIO} - 0.2	0.1	-0.1
PCI	-0.3	$0.3V_{CCIO}$	$0.5V_{CCIO}$	3.6	$0.1V_{CCIO}$	$0.9V_{CCIO}$	1.5	-0.5
SSTL3 class I	-0.3	V_{REF} - 0.2	V_{REF} + 0.2	3.6	0.7	V_{CCIO} - 1.1	8	-8
SSTL3 class II	-0.3	V_{REF} - 0.2	V_{REF} + 0.2	3.6	0.5	V_{CCIO} - 0.9	16	-16
SSTL2 class I	-0.3	V_{REF} - 0.18	V_{REF} + 0.18	3.6	0.54	V_{CCIO} - 0.62	7.6	-7.6
SSTL2 class II	-0.3	V_{REF} - 0.18	V_{REF} + 0.18	3.6	0.35	V_{CCIO} - 0.43	15.2	-15.2
SSTL18 class I	-0.3	V_{REF} - 0.125	V_{REF} + 0.125	3.6	0.4	V_{CCIO} - 0.4	6.7	-6.7
HSTL15 class I	-0.3	V_{REF} - 0.1	V_{REF} + 0.1	3.6	0.4	V_{CCIO} - 0.4	8	-8
HSTL15 class III	-0.3	V_{REF} - 0.1	V_{REF} + 0.1	3.6	0.4	V_{CCIO} - 0.4	24	-8
HSTL18 class I	-0.3	V_{REF} - 0.1	V_{REF} + 0.1	3.6	0.4	V_{CCIO} - 0.4	9.6	-9.6
HSTL18 class II	-0.3	V_{REF} - 0.1	V_{REF} + 0.1	3.6	0.4	V_{CCIO} - 0.4	16	-16
HSTL18 class III	-0.3	V_{REF} - 0.1	V_{REF} + 0.1	3.6	0.4	V_{CCIO} - 0.4	24	-8

1. The average DC current drawn by I/Os between GND connections, or between the last GND in an I/O bank and the end of an I/O bank, as shown in the logic signal connections table shall not exceed n * 8mA. Where n is the number of I/Os between bank GND connections or between the last GND in a bank and the end of a bank.

Petitioners
Ex. 1067, p. 3-8

sysIO Differential Electrical Characteristics

LVDS

Over Recommended Operating Conditions

Parameter Symbol	Parameter Description	Test Conditions	Min.	Typ.	Max.	Units
V_{INP}, V_{INM}	Input Voltage		0	—	2.4	V
V_{THD}	Differential Input Threshold		+/-100	—	—	mV
V_{CM}	Input Common Mode Voltage	100mV ≤ V_{THD}	V_{THD}/2	1.2	1.8	V
		200mV ≤ V_{THD}	V_{THD}/2	1.2	1.9	V
		350mV ≤ V_{THD}	V_{THD}/2	1.2	2.0	V
I_{IN}	Input current	Power on or power off	—	—	+/-10	µA
V_{OH}	Output high voltage for V_{OP} or V_{OM}	R_T = 100 ohms	—	1.38	1.60	V
V_{OL}	Output low voltage for V_{OP} or V_{OM}	R_T = 100 ohms	0.9V	1.03	—	V
V_{OD}	Output voltage differential	(V_{OP} - V_{OM}), R_T = 100 ohms	250	350	450	mV
ΔV_{OD}	Change in V_{OD} between high and low		—	—	50	mV
V_{OS}	Output voltage offset	(V_{OP} - V_{OM})/2, R_T = 100 ohms	1.125	1.25	1.375	V
ΔV_{OS}	Change in V_{OS} between H and L		—	—	50	mV
I_{OSD}	Output short circuit current	V_{OD} = 0V Driver outputs shorted	—	—	6	mA

Petitioners
Ex. 1067, p. 3-9

Differential HSTL and SSTL

Differential HSTL and SSTL outputs are implemented as a pair of complementary single-ended outputs. All allowable single-ended output classes (class I and class II) are supported in this mode.

LVDS25E

The top and bottom side of LatticeXP devices support LVDS outputs via emulated complementary LVCMOS outputs in conjunction with a parallel resistor across the driver outputs. The scheme shown in Figure 3-1 is one possible solution for point-to-point signals.

Figure 3-1. LVDS25E Output Termination Example

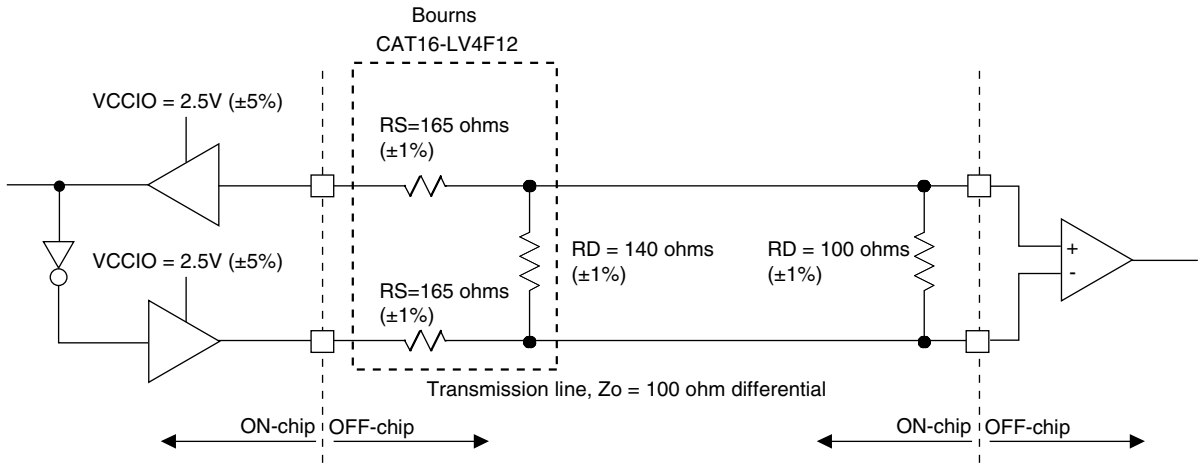

Table 3-1. LVDS25E DC Conditions

Over Recommended Operating Conditions

Parameter	Description	Typical	Units
V_{OH}	Output high voltage	1.43	V
V_{OL}	Output low voltage	1.07	V
V_{OD}	Output differential voltage	0.35	V
V_{CM}	Output common mode voltage	1.25	V
Z_{BACK}	Back impedance	100	Ω
I_{DC}	DC output current	3.66	mA

BLVDS

The LatticeXP devices support BLVDS standard. This standard is emulated using complementary LVCMOS outputs in conjunction with a parallel external resistor across the driver outputs. BLVDS is intended for use when multi-drop and bi-directional multi-point differential signaling is required. The scheme shown in Figure 3-2 is one possible solution for bi-directional multi-point differential signals.

Petitioners
Ex. 1067, p. 3-10

Figure 3-2. BLVDS Multi-point Output Example

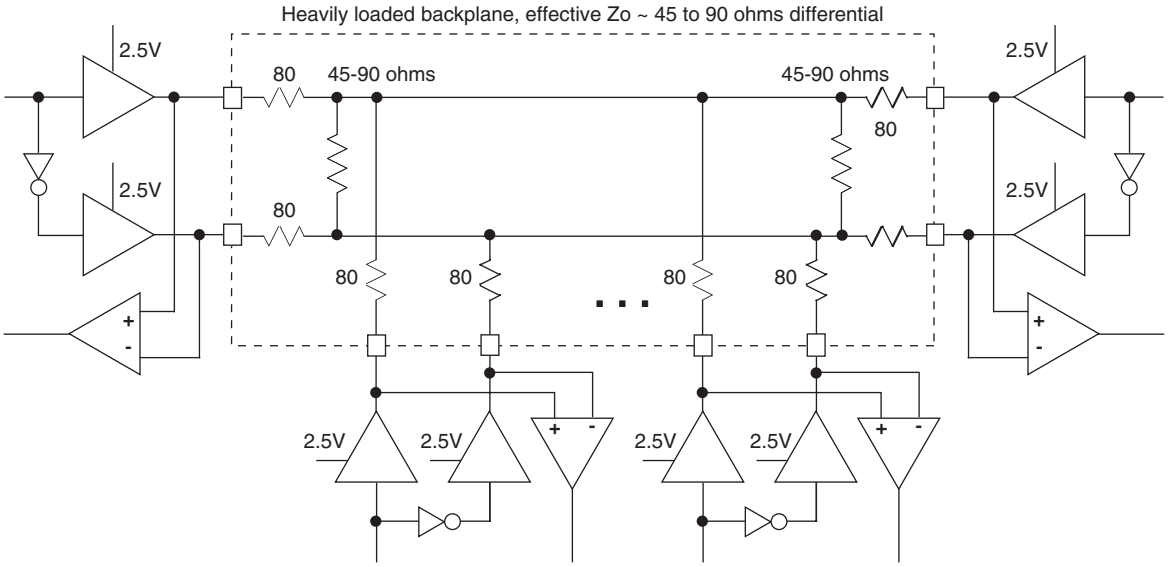

Table 3-2. BLVDS DC Conditions[1]

Over Recommended Operating Conditions

Symbol	Description	Typical		Units
		Zo = 45	Zo = 90	
Z_{OUT}	Output impedance	100	100	ohms
R_{TLEFT}	Left end termination	45	90	ohms
R_{TRIGHT}	Right end termination	45	90	ohms
V_{OH}	Output high voltage	1.375	1.48	V
V_{OL}	Output low voltage	1.125	1.02	V
V_{OD}	Output differential voltage	0.25	0.46	V
V_{CM}	Output common mode voltage	1.25	1.25	V
I_{DC}	DC output current	11.2	10.2	mA

1. For input buffer, see LVDS table.

Petitioners
Ex. 1067, p. 3-11

LVPECL

The LatticeXP devices support differential LVPECL standard. This standard is emulated using complementary LVCMOS outputs in conjunction with a parallel resistor across the driver outputs. The LVPECL input standard is supported by the LVDS differential input buffer. The scheme shown in Figure 3-3 is one possible solution for point-to-point signals.

Figure 3-3. Differential LVPECL

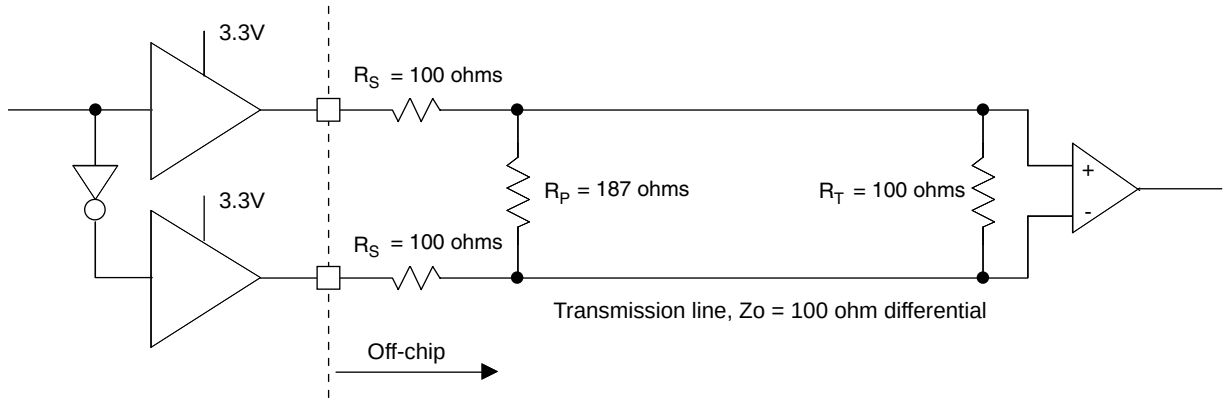

Table 3-3. LVPECL DC Conditions[1]

Over Recommended Operating Conditions

Symbol	Description	Typical	Units
Z_{OUT}	Output impedance	100	ohms
R_P	Driver parallel resistor	187	ohms
R_S	Driver series resistor	100	ohms
R_T	Receiver termination	100	ohms
V_{OH}	Output high voltage	2.03	V
V_{OL}	Output low voltage	1.27	V
V_{OD}	Output differential voltage	0.76	V
V_{CM}	Output common mode voltage	1.65	V
Z_{BACK}	Back impedance	85.7	ohms
I_{DC}	DC output current	12.7	mA

1. For input buffer, see LVDS table.

For further information on LVPECL, BLVDS and other differential interfaces please see details of additional technical documentation at the end of the data sheet.

RSDS

The LatticeXP devices support differential RSDS standard. This standard is emulated using complementary LVCMOS outputs in conjunction with a parallel resistor across the driver outputs. The RSDS input standard is supported by the LVDS differential input buffer. The scheme shown in Figure 3-4 is one possible solution for RSDS standard implementation. Use LVDS25E mode with suggested resistors for RSDS operation. Resistor values in Figure 3-4 are industry standard values for 1% resistors.

Petitioners
Ex. 1067, p. 3-12

Figure 3-4. RSDS (Reduced Swing Differential Standard)

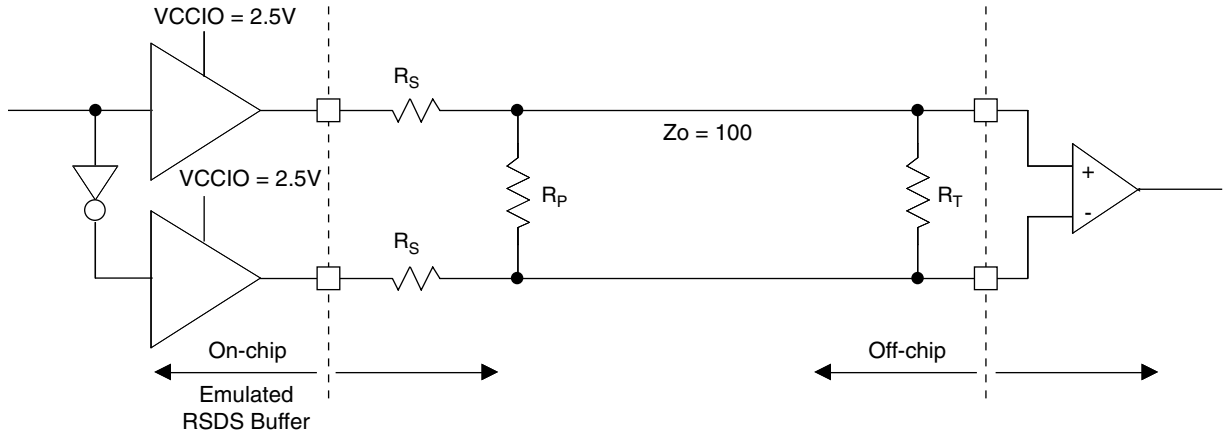

Table 3-4. RSDS DC Conditions

Parameter	Description	Typical	Units
Z_{OUT}	Output impedance	20	ohms
R_S	Driver series resistor	300	ohms
R_P	Driver parallel resistor	121	ohms
R_T	Receiver termination	100	ohms
V_{OH}	Output high voltage	1.35	V
V_{OL}	Output low voltage	1.15	V
V_{OD}	Output differential voltage	0.20	V
V_{CM}	Output common mode voltage	1.25	V
Z_{BACK}	Back impedance	101.5	ohms
I_{DC}	DC output current	3.66	mA

Petitioners
Ex. 1067, p. 3-13

Typical Building Block Function Performance[1]

Pin-to-Pin Performance (LVCMOS25 12 mA Drive)

Function	-5 Timing	Units
Basic Functions		
16-bit decoder	6.1	ns
32-bit decoder	7.3	ns
64-bit decoder	8.2	ns
4:1 MUX	4.9	ns
8:1 MUX	5.3	ns
16:1 MUX	5.7	ns
32:1 MUX	6.3	ns

Register to Register Performance

Function	-5 Timing	Units
Basic Functions		
16-bit decoder	351	MHz
32-bit decoder	248	MHz
64-bit decoder	237	MHz
4:1 MUX	590	MHz
8:1 MUX	523	MHz
16:1 MUX	434	MHz
32:1 MUX	355	MHz
8-bit adder	343	MHz
16-bit adder	292	MHz
64-bit adder	130	MHz
16-bit counter	388	MHz
32-bit counter	295	MHz
64-bit counter	200	MHz
64-bit accumulator	164	MHz
Embedded Memory Functions		
Single Port RAM 256x36 bits	254	MHz
True-Dual Port RAM 512x18 bits	254	MHz
Distributed Memory Functions		
16x2 SP RAM	434	MHz
64x2 SP RAM	332	MHz
128x4 SP RAM	235	MHz
32x2 PDP RAM	322	MHz
64x4 PDP RAM	291	MHz

1. These timing numbers were generated using the ispLEVER design tool. Exact performance may vary with design and tool version. The tool uses internal parameters that have been characterized but are not tested on every device.

Timing v.F0.11

Petitioners
Ex. 1067, p. 3-14

Derating Logic Timing

Logic timing provided in the following sections of this data sheet and in the ispLEVER design tools are worst case numbers in the operating range. Actual delays at nominal temperature and voltage for best-case process can be much better than the values given in the tables. The ispLEVER design tool from Lattice can provide logic timing numbers at a particular temperature and voltage.

Petitioners
Ex. 1067, p. 3-15

LatticeXP External Switching Characteristics

Over Recommended Operating Conditions

Parameter	Description	Device	-5		-4		-3		Units
			Min.	Max.	Min.	Max.	Min.	Max.	
General I/O Pin Parameters (Using Primary Clock without PLL)[1]									
t_{CO}	Clock to Output - PIO Output Register	LFXP3	—	5.12	—	6.12	—	7.43	ns
		LFXP6	—	5.30	—	6.34	—	7.69	ns
		LFXP10	—	5.52	—	6.60	—	8.00	ns
		LFXP15	—	5.72	—	6.84	—	8.29	ns
		LFXP20	—	5.97	—	7.14	—	8.65	ns
t_{SU}	Clock to Data Setup - PIO Input Register	LFXP3	-0.40	—	-0.28	—	-0.16	—	ns
		LFXP6	-0.33	—	-0.32	—	-0.30	—	ns
		LFXP10	-0.61	—	-0.71	—	-0.81	—	ns
		LFXP15	-0.71	—	-0.77	—	-0.87	—	ns
		LFXP20	-0.95	—	-1.14	—	-1.35	—	ns
t_H	Clock to Data Hold - PIO Input Register	LFXP3	2.10	—	2.50	—	2.98	—	ns
		LFXP6	2.28	—	2.72	—	3.24	—	ns
		LFXP10	3.02	—	3.51	—	3.71	—	ns
		LFXP15	2.70	—	3.22	—	3.85	—	ns
		LFXP20	2.95	—	3.52	—	4.21	—	ns
t_{SU_DEL}	Clock to Data Setup - PIO Input Register with Input Data Delay	LFXP3	2.38	—	2.49	—	2.66	—	ns
		LFXP6	2.92	—	3.18	—	3.42	—	ns
		LFXP10	2.72	—	2.75	—	2.84	—	ns
		LFXP15	2.99	—	3.13	—	3.18	—	ns
		LFXP20	4.47	—	4.56	—	4.80	—	ns
t_{H_DEL}	Clock to Data Hold - PIO Input Register with Input Data Delay	LFXP3	-0.70	—	-0.80	—	-0.92	—	ns
		LFXP6	-0.47	—	-0.38	—	-0.31	—	ns
		LFXP10	-0.60	—	-0.47	—	-0.32	—	ns
		LFXP15	-1.05	—	-0.98	—	-1.01	—	ns
		LFXP20	-0.80	—	-0.58	—	-0.31	—	ns
f_{MAX_IO}	Clock Frequency of I/O and PFU Register	All	—	400	—	360	—	320	MHz
DDR I/O Pin Parameters[2]									
t_{DVADQ}	Data Valid After DQS (DDR Read)	All	—	0.19	—	0.19	—	0.19	UI
t_{DVEDQ}	Data Hold After DQS (DDR Read)	All	0.67	—	0.67	—	0.67	—	UI
t_{DQVBS}	Data Valid Before DQS	All	0.20	—	0.20	—	0.20	—	UI
t_{DQVAS}	Data Valid After DQS	All	0.20	—	0.20	—	0.20	—	UI
f_{MAX_DDR}	DDR Clock Frequency	All	95	166	95	133	95	100	MHz
Primary and Secondary Clocks									
f_{MAX_PRI}	Frequency for Primary Clock Tree	All	—	450	—	412	—	375	MHz
t_{W_PRI}	Clock Pulse Width for Primary Clock	All	1.19	—	1.19	—	1.19	—	ns
t_{SKEW_PRI}	Primary Clock Skew within an I/O Bank	LFXP3/6/10/15	—	250	—	300	—	350	ps
		LFXP20	—	300	—	350	—	400	ps

1. General timing numbers based on LVCMOS 2.5, 12mA.
2. DDR timing numbers based on SSTL I/O.

Timing v.F0.11

Petitioners
Ex. 1067, p. 3-16

Figure 3-5. DDR Timings

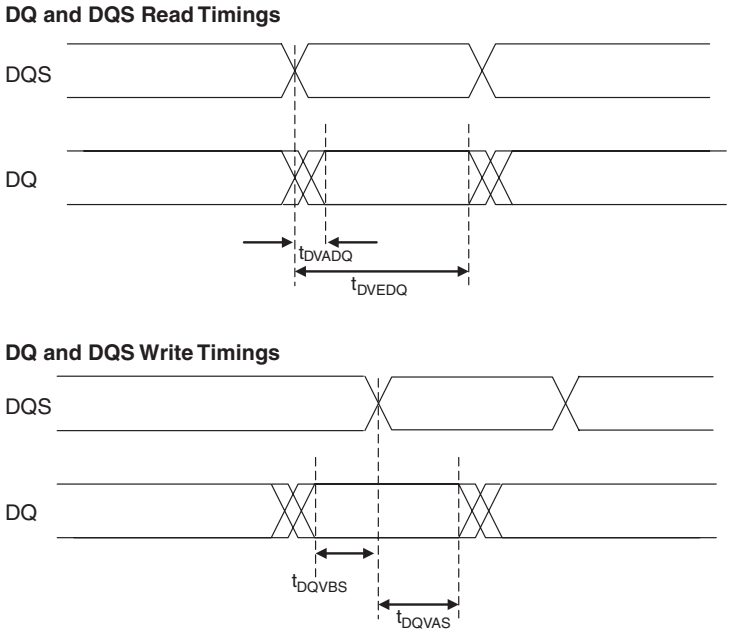

Petitioners
Ex. 1067, p. 3-17

LatticeXP Internal Timing Parameters[1]

Over Recommended Operating Conditions

Parameter	Description	-5		-4		-3		Units
		Min.	Max.	Min.	Max.	Min.	Max.	
PFU/PFF Logic Mode Timing								
t_{LUT4_PFU}	LUT4 Delay (A to D Inputs to F Output)	—	0.28	—	0.34	—	0.40	ns
t_{LUT6_PFU}	LUT6 Delay (A to D Inputs to OFX Output)	—	0.44	—	0.53	—	0.63	ns
t_{LSR_PFU}	Set/Reset to Output of PFU	—	0.90	—	1.08	—	1.29	ns
t_{SUM_PFU}	Clock to Mux (M0,M1) Input Setup Time	0.13	—	0.15	—	0.19	—	ns
t_{HM_PFU}	Clock to Mux (M0,M1) Input Hold Time	-0.04	—	-0.03	—	-0.03	—	ns
t_{SUD_PFU}	Clock to D Input Setup Time	0.13	—	0.16	—	0.19	—	ns
t_{HD_PFU}	Clock to D Input Hold Time	-0.03	—	-0.02	—	-0.02	—	ns
t_{CK2Q_PFU}	Clock to Q Delay, D-type Register Configuration	—	0.40	—	0.48	—	0.58	ns
t_{LE2Q_PFU}	Clock to Q Delay Latch Configuration	—	0.53	—	0.64	—	0.76	ns
t_{LD2Q_PFU}	D to Q Throughput Delay when Latch is Enabled	—	0.55	—	0.66	—	0.79	ns
PFU Dual Port Memory Mode Timing								
t_{CORAM_PFU}	Clock to Output	—	0.40	—	0.48	—	0.58	ns
t_{SUDATA_PFU}	Data Setup Time	-0.18	—	-0.14	—	-0.11	—	ns
t_{HDATA_PFU}	Data Hold Time	0.28	—	0.34	—	0.40	—	ns
t_{SUADDR_PFU}	Address Setup Time	-0.46	—	-0.37	—	-0.30	—	ns
t_{HADDR_PFU}	Address Hold Time	0.71	—	0.85	—	1.02	—	ns
t_{SUWREN_PFU}	Write/Read Enable Setup Time	-0.22	—	-0.17	—	-0.14	—	ns
t_{HWREN_PFU}	Write/Read Enable Hold Time	0.33	—	0.40	—	0.48	—	ns
PIC Timing								
PIO Input/Output Buffer Timing								
t_{IN_PIO}	Input Buffer Delay	—	0.62	—	0.72	—	0.85	ns
t_{OUT_PIO}	Output Buffer Delay	—	2.12	—	2.54	—	3.05	ns
IOLOGIC Input/Output Timing								
t_{SUI_PIO}	Input Register Setup Time (Data Before Clock)	1.35	—	1.83	—	2.37	—	ns
t_{HI_PIO}	Input Register Hold Time (Data After Clock)	0.05	—	0.05	—	0.05	—	ns
t_{COO_PIO}	Output Register Clock to Output Delay	—	0.36	—	0.44	—	0.52	ns
t_{SUCE_PIO}	Input Register Clock Enable Setup Time	-0.09	—	-0.07	—	-0.06	—	ns
t_{HCE_PIO}	Input Register Clock Enable Hold Time	0.13	—	0.16	—	0.19	—	ns
t_{SULSR_PIO}	Set/Reset Setup Time	0.19	—	0.23	—	0.28	—	ns
t_{HLSR_PIO}	Set/Reset Hold Time	-0.14	—	-0.11	—	-0.09	—	ns
EBR Timing								
t_{CO_EBR}	Clock to Output from Address or Data	—	4.01	—	4.81	—	5.78	ns
t_{COO_EBR}	Clock to Output from EBR Output Register	—	0.81	—	0.97	—	1.17	ns
t_{SUDATA_EBR}	Setup Data to EBR Memory	-0.26	—	-0.21	—	-0.17	—	ns
t_{HDATA_EBR}	Hold Data to EBR Memory	0.41	—	0.49	—	0.59	—	ns
t_{SUADDR_EBR}	Setup Address to EBR Memory	-0.26	—	-0.21	—	-0.17	—	ns
t_{HADDR_EBR}	Hold Address to EBR Memory	0.41	—	0.49	—	0.59	—	ns
t_{SUWREN_EBR}	Setup Write/Read Enable to EBR Memory	-0.17	—	-0.13	—	-0.11	—	ns
t_{HWREN_EBR}	Hold Write/Read Enable to EBR Memory	0.26	—	0.31	—	0.37	—	ns
t_{SUCE_EBR}	Clock Enable Setup Time to EBR Output Register	0.19	—	0.23	—	0.28	—	ns
t_{HCE_EBR}	Clock Enable Hold Time to EBR Output Register	-0.13	—	-0.10	—	-0.08	—	ns

Petitioners
Ex. 1067, p. 3-18

LatticeXP Internal Timing Parameters[1] (Continued)

Over Recommended Operating Conditions

Parameter	Description	-5		-4		-3		Units
		Min.	Max.	Min.	Max.	Min.	Max.	
t_{RSTO_EBR}	Reset To Output Delay Time from EBR Output Register	—	1.61	—	1.94	—	2.32	ns
PLL Parameters								
t_{RSTREC}	Reset Recovery to Rising Clock	—	1.00	—	1.00	—	1.00	ns
t_{RSTSU}	Reset Signal Setup Time	1.00	—	1.00	—	1.00	—	ns

1. Internal parameters are characterized but not tested on every device.
Timing v.F0.11

Petitioners
Ex. 1067, p. 3-19

Timing Diagrams

PFU Timing Diagrams

Figure 3-6. Slice Single/Dual Port Write Cycle Timing

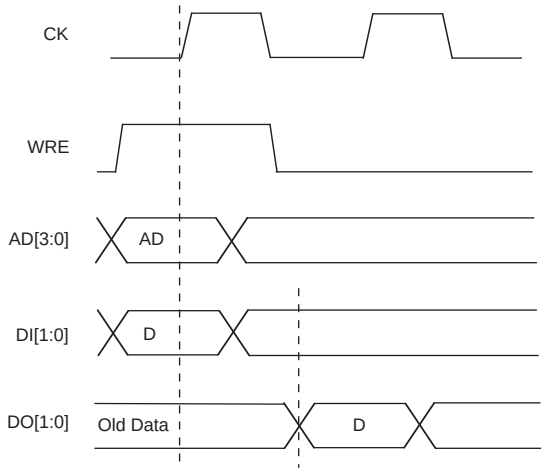

Figure 3-7. Slice Single /Dual Port Read Cycle Timing

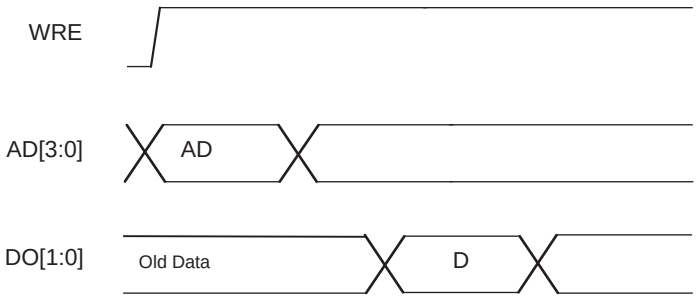

Petitioners
Ex. 1067, p. 3-20

EBR Memory Timing Diagrams

Figure 3-8. Read Mode (Normal)

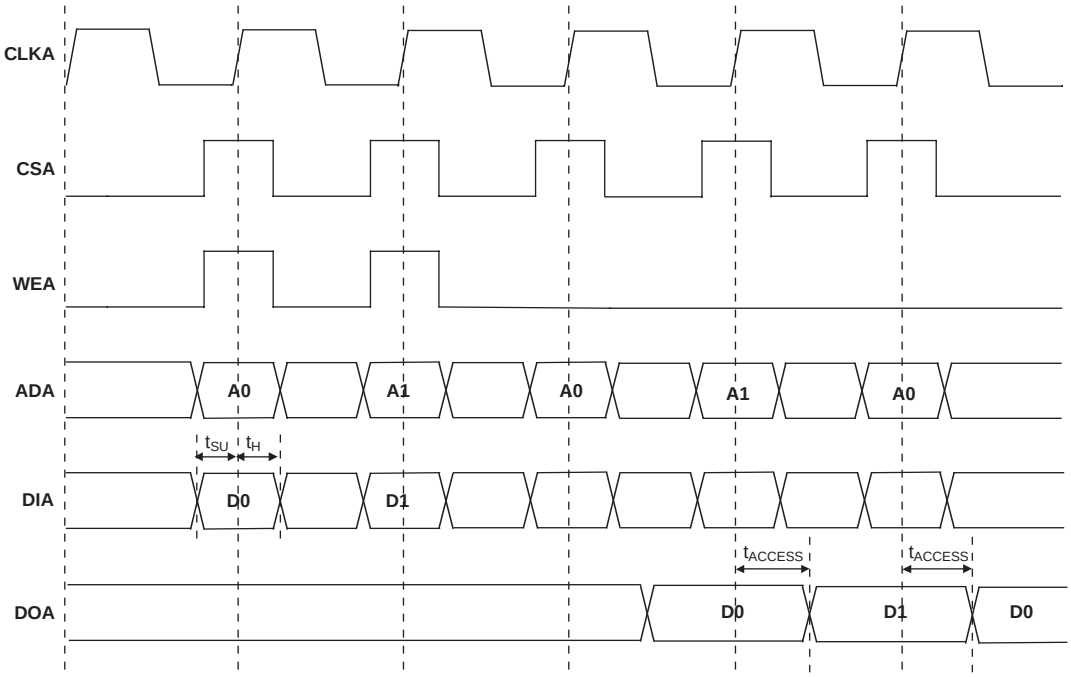

Note: Input data and address are registered at the positive edge of the clock and output data appears after the positive of the clock.

Figure 3-9. Read Mode with Input and Output Registers

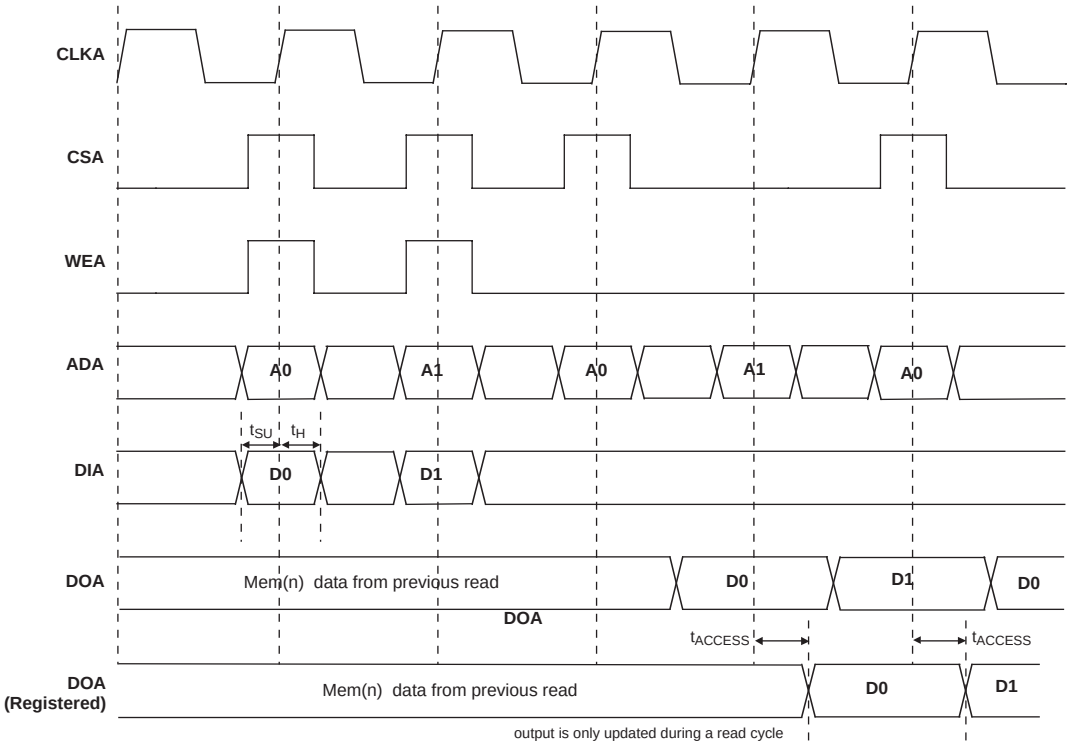

Petitioners
Ex. 1067, p. 3-21

Figure 3-10. Read Before Write (SP Read/Write on Port A, Input Registers Only)

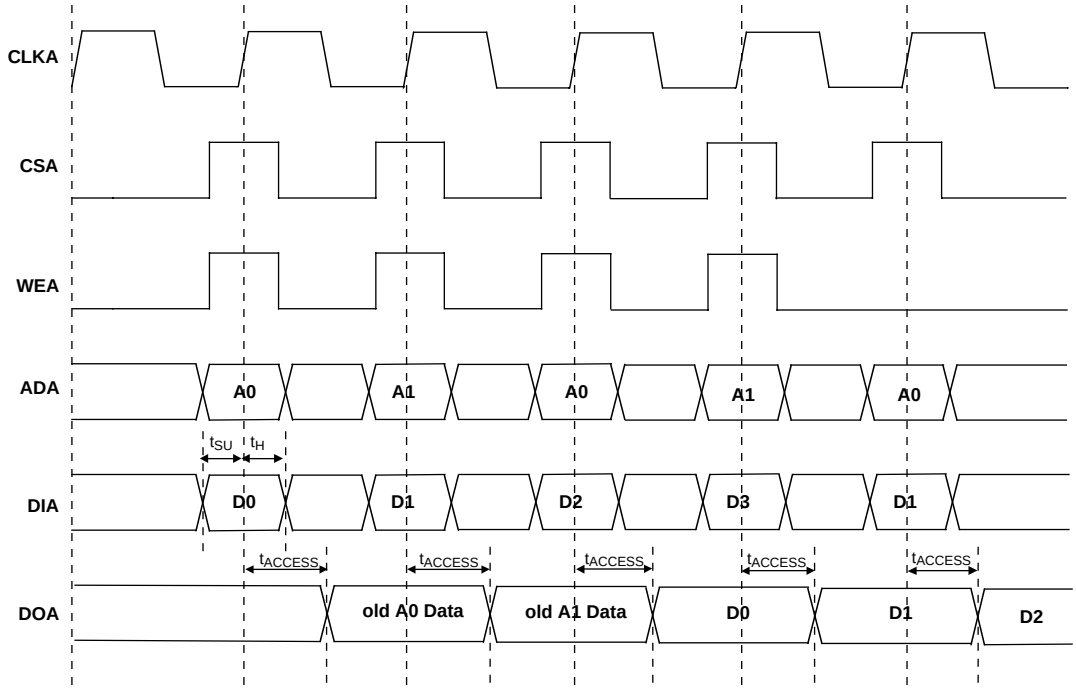

Note: Input data and address are registered at the positive edge of the clock and output data appears after the positive of the clock.

Figure 3-11. Write Through (SP Read/Write On Port A, Input Registers Only)

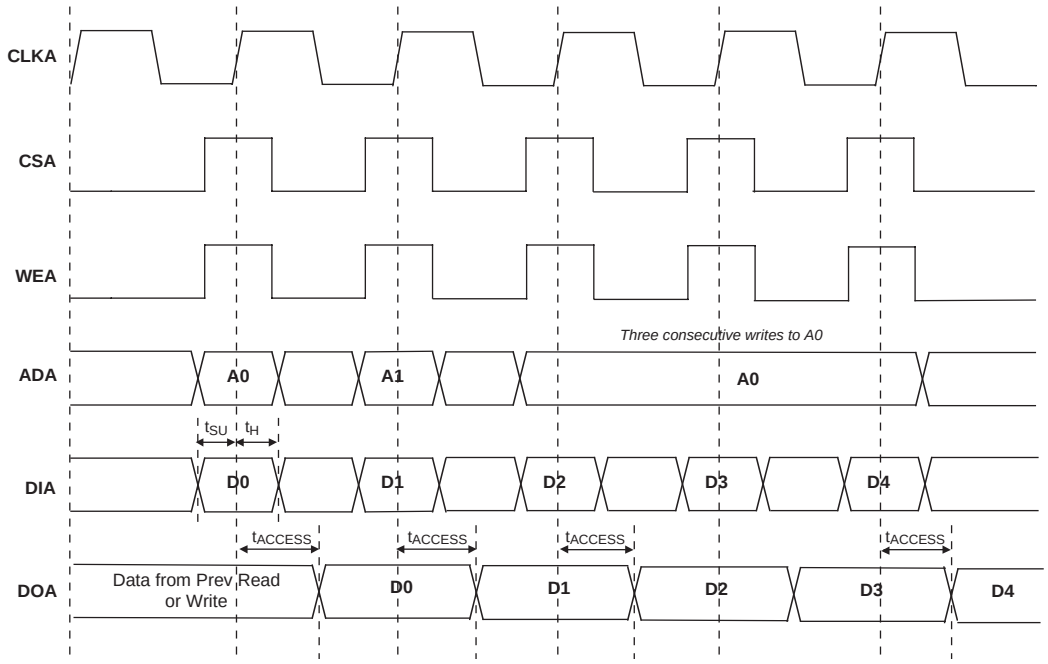

Note: Input data and address are registered at the positive edge of the clock and output data appears after the positive of the clock.

Petitioners
Ex. 1067, p. 3-22

LatticeXP Family Timing Adders[1]

Over Recommended Operating Conditions

Buffer Type	Description	-5	-4	-3	Units
Input Adjusters					
LVDS25E	LVDS 2.5 Emulated	0.5	0.5	0.5	ns
LVDS25	LVDS	0.4	0.4	0.4	ns
BLVDS25	BLVDS	0.5	0.5	0.5	ns
LVPECL33	LVPECL	0.6	0.6	0.6	ns
HSTL18_I	HSTL_18 class I	0.4	0.4	0.4	ns
HSTL18_II	HSTL_18 class II	0.4	0.4	0.4	ns
HSTL18_III	HSTL_18 class III	0.4	0.4	0.4	ns
HSTL18D_I	Differential HSTL 18 class I	0.4	0.4	0.4	ns
HSTL18D_II	Differential HSTL 18 class II	0.4	0.4	0.4	ns
HSTL18D_III	Differential HSTL 18 class III	0.4	0.4	0.4	ns
HSTL15_I	HSTL_15 class I	0.5	0.5	0.5	ns
HSTL15_III	HSTL_15 class III	0.5	0.5	0.5	ns
HSTL15D_I	Differential HSTL 15 class I	0.5	0.5	0.5	ns
HSTL15D_III	Differential HSTL 15 class III	0.5	0.5	0.5	ns
SSTL33_I	SSTL_3 class I	0.6	0.6	0.6	ns
SSTL33_II	SSTL_3 class II	0.6	0.6	0.6	ns
SSTL33D_I	Differential SSTL_3 class I	0.6	0.6	0.6	ns
SSTL33D_II	Differential SSTL_3 class II	0.6	0.6	0.6	ns
SSTL25_I	SSTL_2 class I	0.5	0.5	0.5	ns
SSTL25_II	SSTL_2 class II	0.5	0.5	0.5	ns
SSTL25D_I	Differential SSTL_2 class I	0.5	0.5	0.5	ns
SSTL25D_II	Differential SSTL_2 class II	0.5	0.5	0.5	ns
SSTL18_I	SSTL_18 class I	0.5	0.5	0.5	ns
SSTL18D_I	Differential SSTL_18 class I	0.5	0.5	0.5	ns
LVTTL33	LVTTL	0.2	0.2	0.2	ns
LVCMOS33	LVCMOS 3.3	0.2	0.2	0.2	ns
LVCMOS25	LVCMOS 2.5	0.0	0.0	0.0	ns
LVCMOS18	LVCMOS 1.8	0.1	0.1	0.1	ns
LVCMOS15	LVCMOS 1.5	0.1	0.1	0.1	ns
LVCMOS12	LVCMOS 1.2	0.1	0.1	0.1	ns
PCI33	PCI	0.2	0.2	0.2	ns
Output Adjusters					
LVDS25E	LVDS 2.5 Emulated	0.3	0.3	0.3	ns
LVDS25	LVDS 2.5	0.3	0.3	0.3	ns
BLVDS25	BLVDS 2.5	0.3	0.3	0.3	ns
LVPECL33	LVPECL 3.3	0.1	0.1	0.1	ns
HSTL18_I	HSTL_18 class I	0.1	0.1	0.1	ns
HSTL18_II	HSTL_18 class II	0.1	0.1	0.1	ns
HSTL18_III	HSTL_18 class III	0.2	0.2	0.2	ns
HSTL18D_I	Differential HSTL 18 class I	0.1	0.1	0.1	ns
HSTL18D_II	Differential HSTL 18 class II	-0.1	-0.1	-0.1	ns
HSTL18D_III	Differential HSTL 18 class III	0.2	0.2	0.2	ns

Petitioners
Ex. 1067, p. 3-23

LatticeXP Family Timing Adders[1] (Continued)

Over Recommended Operating Conditions

Buffer Type	Description	-5	-4	-3	Units
HSTL15_I	HSTL_15 class I	0.2	0.2	0.2	ns
HSTL15_III	HSTL_15 class III	0.2	0.2	0.2	ns
HSTL15D_I	Differential HSTL 15 class I	0.2	0.2	0.2	ns
HSTL15D_III	Differential HSTL 15 class III	0.2	0.2	0.2	ns
SSTL33_I	SSTL_3 class I	0.1	0.1	0.1	ns
SSTL33_II	SSTL_3 class II	0.3	0.3	0.3	ns
SSTL33D_I	Differential SSTL_3 class I	0.1	0.1	0.1	ns
SSTL33D_II	Differential SSTL_3 class II	0.3	0.3	0.3	ns
SSTL25_I	SSTL_2 class I	-0.1	-0.1	-0.1	ns
SSTL25_II	SSTL_2 class II	0.3	0.3	0.3	ns
SSTL25D_I	Differential SSTL_2 class I	-0.1	-0.1	-0.1	ns
SSTL25D_II	Differential SSTL_2 class II	0.3	0.3	0.3	ns
SSTL18_I	SSTL_1.8 class I	0.1	0.1	0.1	ns
SSTL18D_I	Differential SSTL_1.8 class I	0.1	0.1	0.1	ns
LVTTL33_4mA	LVTTL 4mA drive	0.8	0.8	0.8	ns
LVTTL33_8mA	LVTTL 8mA drive	0.5	0.5	0.5	ns
LVTTL33_12mA	LVTTL 12mA drive	0.3	0.3	0.3	ns
LVTTL33_16mA	LVTTL 16mA drive	0.4	0.4	0.4	ns
LVTTL33_20mA	LVTTL 20mA drive	0.3	0.3	0.3	ns
LVCMOS33_2mA	LVCMOS 3.3 2mA drive	0.8	0.8	0.8	ns
LVCMOS33_4mA	LVCMOS 3.3 4mA drive	0.8	0.8	0.8	ns
LVCMOS33_8mA	LVCMOS 3.3 8mA drive	0.5	0.5	0.5	ns
LVCMOS33_12mA	LVCMOS 3.3 12mA drive	0.3	0.3	0.3	ns
LVCMOS33_16mA	LVCMOS 3.3 16mA drive	0.4	0.4	0.4	ns
LVCMOS33_20mA	LVCMOS 3.3 20mA drive	0.3	0.3	0.3	ns
LVCMOS25_2mA	LVCMOS 2.5 2mA drive	0.7	0.7	0.7	ns
LVCMOS25_4mA	LVCMOS 2.5 4mA drive	0.7	0.7	0.7	ns
LVCMOS25_8mA	LVCMOS 2.5 8mA drive	0.4	0.4	0.4	ns
LVCMOS25_12mA	LVCMOS 2.5 12mA drive	0.0	0.0	0.0	ns
LVCMOS25_16mA	LVCMOS 2.5 16mA drive	0.2	0.2	0.2	ns
LVCMOS25_20mA	LVCMOS 2.5 20mA drive	0.4	0.4	0.4	ns
LVCMOS18_2mA	LVCMOS 1.8 2mA drive	0.6	0.6	0.6	ns
LVCMOS18_4mA	LVCMOS 1.8 4mA drive	0.6	0.6	0.6	ns
LVCMOS18_8mA	LVCMOS 1.8 8mA drive	0.4	0.4	0.4	ns
LVCMOS18_12mA	LVCMOS 1.8 12mA drive	0.2	0.2	0.2	ns
LVCMOS18_16mA	LVCMOS 1.8 16mA drive	0.2	0.2	0.2	ns
LVCMOS15_2mA	LVCMOS 1.5 2mA drive	0.6	0.6	0.6	ns
LVCMOS15_4mA	LVCMOS 1.5 4mA drive	0.6	0.6	0.6	ns
LVCMOS15_8mA	LVCMOS 1.5 8mA drive	0.2	0.2	0.2	ns
LVCMOS12_2mA	LVCMOS 1.2 2mA drive	0.4	0.4	0.4	ns
LVCMOS12_6mA	LVCMOS 1.2 6mA drive	0.4	0.4	0.4	ns
PCI33	PCI33	0.3	0.3	0.3	ns

1. General timing numbers based on LVCMOS 2.5, 12mA.

Timing v.F0.11

Petitioners
Ex. 1067, p. 3-24

sysCLOCK PLL Timing

Over Recommended Operating Conditions

Parameter	Descriptions	Conditions	Min.	Typ.	Max.	Units
f_{IN}	Input Clock Frequency (CLKI, CLKFB)		25	—	375	MHz
f_{OUT}	Output Clock Frequency (CLKOP, CLKOS)		25	—	375	MHz
f_{OUT2}	K-Divider Output Frequency (CLKOK)		0.195	—	187.5	MHz
f_{VCO}	PLL VCO Frequency		375	—	750	MHz
f_{PFD}	Phase Detector Input Frequency		25	—	—	MHz
AC Characteristics						
t_{DT}	Output Clock Duty Cycle	Default duty cycle elected[3]	45	50	55	%
t_{PH}[4]	Output Phase Accuracy		—	—	0.05	UI
t_{OPJIT}[1]	Output Clock Period Jitter	$f_{OUT} \geq$ 100MHz	—	—	+/- 125	ps
		$f_{OUT} <$ 100MHz	—	—	0.02	UIPP
t_{SK}	Input Clock to Output Clock Skew	Divider ratio = integer	—	—	+/- 200	ps
t_W	Output Clock Pulse Width	At 90% or 10%[3]	1	—	—	ns
t_{LOCK}[2]	PLL Lock-in Time		—	—	150	us
t_{PA}	Programmable Delay Unit		100	250	400	ps
t_{IPJIT}	Input Clock Period Jitter		—	—	+/- 200	ps
t_{FBKDLY}	External Feedback Delay		—	—	10	ns
t_{HI}	Input Clock High Time	90% to 90%	0.5	—	—	ns
t_{LO}	Input Clock Low Time	10% to 10%	0.5	—	—	ns
t_{RST}	RST Pulse Width		10	—	—	ns

1. Jitter sample is taken over 10,000 samples of the primary PLL output with clean reference clock.
2. Output clock is valid after t_{LOCK} for PLL reset and dynamic delay adjustment.
3. Using LVDS output buffers.
4. As compared to CLKOP output.

Timing v.F0.11

LatticeXP "C" Sleep Mode Timing

Parameter	Descriptions		Min.	Typ.	Max.	Units
t_{PWRDN}	SLEEPN Low to I/O Tristate		—	20	32	ns
t_{PWRUP}	SLEEPN High to Power Up	LFXP3	—	1.4	2.1	ms
		LFXP6	—	1.7	2.4	ms
		LFXP10	—	1.1	1.8	ms
		LFXP15	—	1.4	2.1	ms
		LFXP20	—	1.7	2.4	ms
$t_{WSLEEPN}$	SLEEPN Pulse Width to Initiate Sleep Mode		400	—	—	ns
t_{WAWAKE}	SLEEPN Pulse Rejection		—	—	120	ns

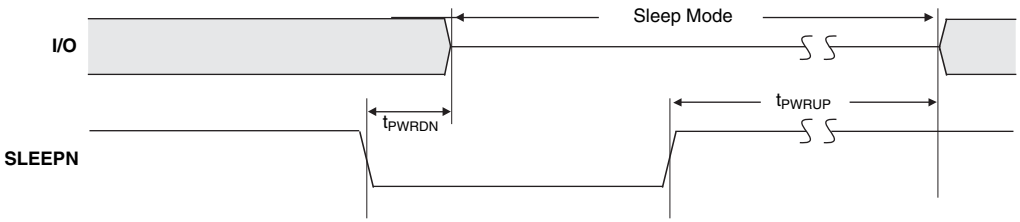

Petitioners
Ex. 1067, p. 3-25

LatticeXP sysCONFIG Port Timing Specifications

Over Recommended Operating Conditions

Parameter	Description	Min.	Max.	Units
sysCONFIG Byte Data Flow				
t_{SUCBDI}	Byte D[0:7] Setup Time to CCLK	7	—	ns
t_{HCBDI}	Byte D[0:7] Hold Time to CCLK	3	—	ns
t_{CODO}	Clock to Dout in Flowthrough Mode	—	12	ns
t_{SUCS}	CS[0:1] Setup Time to CCLK	7	—	ns
t_{HCS}	CS[0:1] Hold Time to CCLK	2	—	ns
t_{SUWD}	Write Signal Setup Time to CCLK	7	—	ns
t_{HWD}	Write Signal Hold Time to CCLK	2	—	ns
t_{DCB}	CCLK to BUSY Delay Time	—	12	ns
t_{CORD}	Clock to Out for Read Data	—	12	ns
sysCONFIG Byte Slave Clocking				
t_{BSCH}	Byte Slave Clock Minimum High Pulse	6	—	ns
t_{BSCL}	Byte Slave Clock Minimum Low Pulse	8	—	ns
t_{BSCYC}	Byte Slave Clock Cycle Time	15	—	ns
sysCONFIG Serial (Bit) Data Flow				
t_{SUSCDI}	DI (Data In) Setup Time to CCLK	7	—	ns
t_{HSCDI}	DI (Data In) Hold Time to CCLK	2	—	ns
t_{CODO}	Clock to Dout in Flowthrough Mode	—	12	ns
sysCONFIG Serial Slave Clocking				
t_{SSCH}	Serial Slave Clock Minimum High Pulse	6	—	ns
t_{SSCL}	Serial Slave Clock Minimum Low Pulse	6	—	ns
sysCONFIG POR, Initialization and Wake Up				
t_{ICFG}	Minimum Vcc to INIT High	—	50	ms
t_{VMC}	Time from t_{ICFG} to Valid Master Clock	—	2	us
t_{PRGMRJ}	Program Pin Pulse Rejection	—	7	ns
t_{PRGM}	PROGRAMN Low Time to Start Configuration	25	—	ns
t_{DINIT}	INIT Low Time	—	1	ms
$t_{DPPINIT}$	Delay Time from PROGRAMN Low to INIT Low	—	37	ns
t_{DINITD}	Delay Time from PROGRAMN Low to DONE Low	—	37	ns
t_{IODISS}	User I/O Disable from PROGRAMN Low	—	25	ns
t_{IOENSS}	User I/O Enabled Time from CCLK Edge During Wake-up Sequence	—	25	ns
t_{MWC}	Additional Wake Master Clock Signals after Done Pin High	120	—	cycles
Configuration Master Clock (CCLK)				
Frequency[1]		Selected Value - 30%	Selected Value + 30%	MHz
Duty Cycle		40	60	%

1.See Table 2-10 for available CCLK frequencies.
Timing v.F0.11

Petitioners
Ex. 1067, p. 3-26

Flash Download Time

Symbol	Parameter		Min.	Typ.	Max.	Units
$t_{REFRESH}$	PROGRAMN Low-to-High. Transition to Done High.	LFXP3	—	1.1	1.7	ms
		LFXP6	—	1.4	2.0	ms
		LFXP10	—	0.9	1.5	ms
		LFXP15	—	1.1	1.7	ms
		LFXP20	—	1.3	1.9	ms

JTAG Port Timing Specifications

Over Recommended Operating Conditions

Symbol	Parameter	Min.	Max.	Units
f_{MAX}		—	25	MHz
t_{BTCP}	TCK [BSCAN] clock pulse width	40	—	ns
t_{BTCPH}	TCK [BSCAN] clock pulse width high	20	—	ns
t_{BTCPL}	TCK [BSCAN] clock pulse width low	20	—	ns
t_{BTS}	TCK [BSCAN] setup time	10	—	ns
t_{BTH}	TCK [BSCAN] hold time	8	—	ns
t_{BTRF}	TCK [BSCAN] rise/fall time	50	—	ns
t_{BTCO}	TAP controller falling edge of clock to valid output	—	10	ns
$t_{BTCODIS}$	TAP controller falling edge of clock to valid disable	—	10	ns
t_{BTCOEN}	TAP controller falling edge of clock to valid enable	—	10	ns
t_{BTCRS}	BSCAN test capture register setup time	8	—	ns
t_{BTCRH}	BSCAN test capture register hold time	25	—	ns
t_{BUTCO}	BSCAN test update register, falling edge of clock to valid output	—	25	ns
$t_{BTUODIS}$	BSCAN test update register, falling edge of clock to valid disable	—	25	ns
$t_{BTUPOEN}$	BSCAN test update register, falling edge of clock to valid enable	—	25	ns

Timing v.F0.11

Petitioners
Ex. 1067, p. 3-27

Switching Test Conditions

Figure 3-12 shows the output test load that is used for AC testing. The specific values for resistance, capacitance, voltage, and other test conditions are shown in Figure 3-5.

Figure 3-12. Output Test Load, LVTTL and LVCMOS Standards

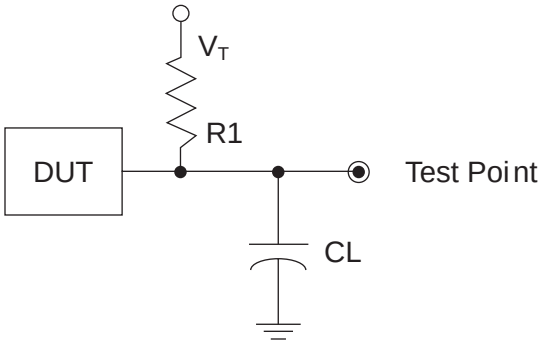

Table 3-5. Test Fixture Required Components, Non-Terminated Interfaces

Test Condition	R_1	C_L	Timing Ref.	V_T
LVTTL and other LVCMOS settings (L -> H, H -> L)	∞	0pF	LVCMOS 3.3 = 1.5V	—
			LVCMOS 2.5 = $V_{CCIO}/2$	—
			LVCMOS 1.8 = $V_{CCIO}/2$	—
			LVCMOS 1.5 = $V_{CCIO}/2$	—
			LVCMOS 1.2 = $V_{CCIO}/2$	—
LVCMOS 2.5 I/O (Z -> H)	188	0pF	$V_{CCIO}/2$	V_{OL}
LVCMOS 2.5 I/O (Z -> L)			$V_{CCIO}/2$	V_{OH}
LVCMOS 2.5 I/O (H -> Z)			V_{OH} - 0.15	V_{OL}
LVCMOS 2.5 I/O (L -> Z)			V_{OL} + 0.15	V_{OH}

Note: Output test conditions for all other interfaces are determined by the respective standards.

Petitioners
Ex. 1067, p. 3-28

Signal Descriptions

Signal Name	I/O	Descriptions
General Purpose		
P[Edge] [Row/Column Number*]_[A/B]	I/O	[Edge] indicates the edge of the device on which the pad is located. Valid edge designations are L (Left), B (Bottom), R (Right), T (Top). [Row/Column Number] indicates the PFU row or the column of the device on which the PIC exists. When Edge is T (Top) or (Bottom), only need to specify Row Number. When Edge is L (Left) or R (Right), only need to specify Column Number. [A/B] indicates the PIO within the PIC to which the pad is connected. Some of these user programmable pins are shared with special function pins. These pin when not used as special purpose pins can be programmed as I/Os for user logic. During configuration, the user-programmable I/Os are tri-stated with an internal pull-up resistor enabled. If any pin is not used (or not bonded to a package pin), it is also tri-stated with an internal pull-up resistor enabled after configuration.
GSRN	I	Global RESET signal. (Active low). Any I/O pin can be configured to be GSRN.
NC	—	No connect.
GND	—	GND - Ground. Dedicated Pins.
V_{CC}	—	VCC - The power supply pins for core logic. Dedicated Pins.
V_{CCAUX}	—	V_{CCAUX} - The Auxiliary power supply pin. It powers all the differential and referenced input buffers. Dedicated Pins.
V_{CCP0}	—	Voltage supply pins for ULM0PLL (and LLM1PLL[1]).
V_{CCP1}	—	Voltage supply pins for URM0PLL (and LRM1PLL[1]).
GNDP0	—	Ground pins for ULM0PLL (and LLM1PLL[1]).
GNDP1	—	Ground pins for URM0PLL (and LRM1PLL[1]).
V_{CCIOx}	—	V_{CCIO} - The power supply pins for I/O bank x. Dedicated Pins.
$V_{REF1(x)}$, $V_{REF2(x)}$	—	Reference supply pins for I/O bank x. Pre-determined pins in each bank are assigned as V_{REF} inputs. When not used, they may be used as I/O pins.
PLL and Clock Functions (Used as user programmable I/O pins when not in use for PLL or clock pins)		
[LOC][num]_PLL[T, C]_IN_A	—	Reference clock (PLL) input Pads: ULM, LLM, URM, LRM, num = row from center, T = true and C = complement, index A, B, C...at each side.
[LOC][num]_PLL[T, C]_FB_A	—	Optional feedback (PLL) input Pads: ULM, LLM, URM, LRM, num = row from center, T = true and C = complement, index A, B, C...at each side.
PCLK[T, C]_[n:0]_[3:0]	—	Primary Clock Pads, T = true and C = complement, n per side, indexed by bank and 0,1, 2, 3 within bank.
[LOC]DQS[num]	—	DQS input Pads: T (Top), R (Right), B (Bottom), L (Left), DQS, num = Ball function number. Any pad can be configured to be DQS output.

© 2006 Lattice Semiconductor Corp. All Lattice trademarks, registered trademarks, patents, and disclaimers are as listed at www.latticesemi.com/legal. All other brand or product names are trademarks or registered trademarks of their respective holders. The specifications and information herein are subject to change without notice.

Petitioners
Ex. 1067, p. 4-1

Signal Descriptions (Cont.)

Signal Name	I/O	Descriptions
Test and Programming (Dedicated pins. Pull-up is enabled on input pins during configuration.)		
TMS	I	Test Mode Select input, used to control the 1149.1 state machine.
TCK	I	Test Clock input pin, used to clock the 1149.1 state machine.
TDI	I	Test Data in pin, used to load data into device using 1149.1 state machine. After power-up, this TAP port can be activated for configuration by sending appropriate command. (Note: once a configuration port is selected it is locked. Another configuration port cannot be selected until the power-up sequence).
TDO	O	Output pin -Test Data out pin used to shift data out of device using 1149.1.
V_{CCJ}	—	V_{CCJ} - The power supply pin for JTAG Test Access Port.
Configuration Pads (used during sysCONFIG)		
CFG[1:0]	I	Mode pins used to specify configuration modes values latched on rising edge of INITN. During configuration, a pull-up is enabled.
INITN	I/O	Open Drain pin - Indicates the FPGA is ready to be configured. During configuration, a pull-up is enabled. If CFG1 and CFG0 are high (SDM) then this pin is pulled low.
PROGRAMN	I	Initiates configuration sequence when asserted low. This pin always has an active pull-up.
DONE	I/O	Open Drain pin - Indicates that the configuration sequence is complete, and the startup sequence is in progress.
CCLK	I/O	Configuration Clock for configuring an FPGA in sysCONFIG mode.
BUSY	I/O	Generally not used. After configuration it is a user-programmable I/O pin.
CSN	I	sysCONFIG chip select (Active low). During configuration, a pull-up is enabled. After configuration it is user a programmable I/O pin.
CS1N	I	sysCONFIG chip select (Active Low). During configuration, a pull-up is enabled. After configuration it is user programmable I/O pin
WRITEN	I	Write Data on Parallel port (Active low). After configuration it is a user programmable I/O pin
D[7:0]	I/O	sysCONFIG Port Data I/O. After configuration these are user programmable I/O pins.
DOUT, CSON	O	Output for serial configuration data (rising edge of CCLK) when using sysCONFIG port. After configuration, it is a user-programmable I/O pin.
DI	I	Input for serial configuration data (clocked with CCLK) when using sysCONFIG port. During configuration, a pull-up is enabled. After configuration it is a user-programmable I/O pin.
SLEEPN[2]	I	Sleep Mode pin - Active low sleep pin. When this pin is held high, the device operates normally. When driven low, the device moves into Sleep Mode after a specified time.This pin has a weak internal pull-up, but when not used an external pull-up to V_{CC} is recommended.
TOE[3]	I	Test Output Enable tri-states all I/O pins when driven low. This pin has a weak internal pull-up, but when not used an external pull-up to V_{CC} is recommended.

1. Applies to LFXP10, LFXP15 and LFXP20 only.
2. Applies to LFXP “C” devices only.
3. Applies to LFXP “E” devices only.

Petitioners
Ex. 1067, p. 4-2

PICs and DDR Data (DQ) Pins Associated with the DDR Strobe (DQS) Pin

PICs Associated with DQS Strobe	PIO within PIC	Polarity	DDR Strobe (DQS) and Data (DQ) Pins
P[Edge] [n-4]	A	True	DQ
	B	Complement	DQ
P[Edge] [n-3]	A	True	DQ
	B	Complement	DQ
P[Edge] [n-2]	A	True	DQ
	B	Complement	DQ
P[Edge] [n-1]	A	True	DQ
P[Edge] [n]			
	B	Complement	DQ
P[Edge] [n+1]	A	True	[Edge]DQSn
	B	Complement	DQ
P[Edge] [n+2]	A	True	DQ
	B	Complement	DQ
P[Edge] [n+3]	A	True	DQ
	B	Complement	DQ

Notes:
1. “n” is a row/column PIC number.
2. The DDR interface is designed for memories that support one DQS strobe per eight bits of data. In some packages, all the potential DDR data (DQ) pins may not be available.
3. The definition of the PIC numbering is provided in the Signal Names column of the Signal Descriptions table in this data sheet.

Petitioners
Ex. 1067, p. 4-3

Pin Information Summary[1]

Pin Type		XP3			XP6		
		100 TQFP	144 TQFP	208 PQFP	144 TQFP	208 PQFP	256 fpBGA
Single Ended User I/O		62	100	136	100	142	188
Differential Pair User I/O[2]		19	35	56	35	58	80
Configuration	Dedicated	11	11	11	11	11	11
	Muxed	14	14	14	14	14	14
TAP		5	5	5	5	5	5
Dedicated (total without supplies)		6	6	6	6	6	6
V_{CC}		2	4	8	4	8	8
V_{CCAUX}		2	2	2	2	2	4
V_{CCPLL}		2	2	2	2	2	2
V_{CCIO}	Bank0	1	1	2	1	2	2
	Bank1	1	1	2	1	2	2
	Bank2	1	1	2	1	2	2
	Bank3	1	1	2	1	2	2
	Bank4	1	2	2	2	2	2
	Bank5	1	1	2	1	2	2
	Bank6	1	1	2	1	2	2
	Bank7	1	1	2	1	2	2
GND		10	13	24	13	24	24
GND_{PLL}		2	2	2	2	2	2
NC		0	0	6	0	0	0
Single Ended/Differential I/O per Bank[2]	Bank0	8/2	12/3	20/8	12/3	20/8	26/11
	Bank1	9/0	12/2	18/6	12/2	18/6	26/11
	Bank2	8/3	12/5	14/6	12/5	17/7	21/9
	Bank3	6/2	13/5	14/6	13/5	14/6	21/9
	Bank4	5/2	14/6	21/9	14/6	21/9	26/11
	Bank5	12/4	12/4	21/9	12/4	21/9	26/11
	Bank6	4/2	13/5	14/6	13/5	17/7	21/9
	Bank7	10/4	12/5	14/6	12/5	14/6	21/9
V_{CCJ}		1	1	1	1	1	1

1. During configuration the user-programmable I/Os are tri-stated with an internal pull-up resistor enabled. If any pin is not used (or not bonded to a package pin), it is also tri-stated with an internal pull-up resistor enabled after configuration.
2. The differential I/O per bank includes both dedicated LVDS and emulated LVDS pin pairs. Please see the Logic Signal Connections table for more information.

Petitioners
Ex. 1067, p. 4-4

Pin Information Summary[1] (Cont.)

Pin Type		XP10		XP15			XP20		
		256 fpBGA	388 fpBGA	256 fpBGA	388 fpBGA	484 fpBGA	256 fpBGA	388 fpBGA	484 fpBGA
Single Ended User I/O		188	244	188	268	300	188	268	340
Differential Pair User I/O[2]		76	104	76	112	128	76	112	144
Configuration	Dedicated	11	11	11	11	11	11	11	11
	Muxed	14	14	14	14	14	14	14	14
TAP		5	5	5	5	5	5	5	5
Dedicated (total without supplies)		6	6	6	6	6	6	6	6
V_{CC}		8	14	8	14	28	8	14	28
V_{CCAUX}		4	4	4	4	12	4	4	12
V_{CCPLL}		2	2	2	2	2	2	2	2
V_{CCIO}	Bank0	2	5	2	5	4	2	5	4
	Bank1	2	5	2	5	4	2	5	4
	Bank2	2	4	2	4	4	2	4	4
	Bank3	2	4	2	4	4	2	4	4
	Bank4	2	5	2	5	4	2	5	4
	Bank5	2	5	2	5	4	2	5	4
	Bank6	2	4	2	4	4	2	4	4
	Bank7	2	4	2	4	4	2	4	4
GND		24	50	24	50	56	24	50	56
GND_{PLL}		2	2	2	2	2	2	2	2
NC		0	24	0	0	40	0	0	0
Single Ended/ Differential I/O per Bank[2]	Bank0	26/11	33/14	26/11	39/16	40/17	26/11	39/16	47/20
	Bank1	26/11	33/14	26/11	39/16	40/17	26/11	39/16	47/20
	Bank2	21/8	28/12	21/8	28/12	35/15	21/8	28/12	38/16
	Bank3	21/8	28/12	21/8	28/12	35/15	21/8	28/12	38/16
	Bank4	26/11	33/14	26/11	39/16	40/17	26/11	39/16	47/20
	Bank5	26/11	33/14	26/11	39/16	40/17	26/11	39/16	47/20
	Bank6	21/8	28/12	21/8	28/12	35/15	21/8	28/12	38/16
	Bank7	21/8	28/12	21/8	28/12	35/15	21/8	28/12	38/16
V_{CCJ}		1	1	1	1	1	1	1	1

1. During configuration the user-programmable I/Os are tri-stated with an internal pull-up resistor enabled. If any pin is not used (or not bonded to a package pin), it is also tri-stated with an internal pull-up resistor enabled after configuration.
2. The differential I/O per bank includes both dedicated LVDS and emulated LVDS pin pairs. Please see the Logic Signal Connections table for more information.

Petitioners
Ex. 1067, p. 4-5

Power Supply and NC Connections

Signals	100 TQFP	144 TQFP	208 PQFP	256 fpBGA	388 fpBGA	484 fpBGA
V_{CC}	28, 77	14, 39, 73, 112	19, 35, 53, 80, 107, 151, 158, 182	D4, D13, E5, E12, M5, M12, N4, N13	H9, J8, J15, K8, K15, L8, L15, M8, M15, N8, N15, P8, P15, R9	F10, F13, G9, G10, G13, G14, H8, H15, J7, J16, K6, K7, K16, K17, N6, N7, N16, N17, P7, P16, R8, R15, T9, T10, T13, T14, U10, U13
V_{CCIO0}	94	133	189, 199	F7, F8	G8, G9, G10, G11, H8	F11, G11, H10, H11
V_{CCIO1}	82	119	167, 177	F9, F10	G12, G13, G14, G15, H15	F12, G12, H12, H13
V_{CCIO2}	65	98	140, 149	G11, H11	H16, J16, K16, L16	K15, L15, L16, L17
V_{CCIO3}	58	88	115, 125	J11, K11	M16, N16, P16, R16	M15, M16, M17, N15
V_{CCIO4}	47	61, 68	87, 97	L9, L10	R15, T12, T13, T14, T15	R12, R13, T12, U12
V_{CCIO5}	38	49	64, 74	L7, L8	R8, T8, T9, T10, T11	R10, R11, T11, U11
V_{CCIO6}	22	21	28, 41	J6, K6	M7, N7, P7, R7	M6, M7, M8, N8
V_{CCIO7}	7	8	13, 23	G6, H6	H7, J7, K7, L7	K8, L6, L7, L8
V_{CCJ}	73	108	154	D16	E20	E20
V_{CCP0}	17	19	25	H4	M2	L5
V_{CCP1}	60	91	128	J12	M21	L18
V_{CCAUX}	25, 71	36, 106	50, 152	E4, E13, M4, M13	G7, G16, T7, T16	G7, G8, G15, G16, H7, H16, R7, R16, T7, T8, T15, T16
GND[1]	10, 18, 21, 33, 43, 44, 52, 59, 68, 84, 90, 99	3, 11, 20, 28, 44, 54, 56, 64, 75, 85, 90, 101, 121, 127, 136	5, 7, 16, 26, 38, 47, 49, 59, 69, 79, 82, 92, 106, 109, 118, 121, 127, 130, 135, 143, 163, 172, 181, 184, 194, 207	A1, A16, F6, F11, G7, G8, G9, G10, H5, H7, H8, H9, H10, J7, J8, J9, J10, J13, K7, K8, K9, K10, L6, L11, T1, T16	A1, A22, H10, H11, H12, H13, H14, J9, J10, J11, J12, J13, J14, K9, K10, K11, K12, K13, K14, L9, L10, L11, L12, L13, L14, M9, M10, M11, M12, M13, M14, N1, N9, N10, N11, N12, N13, N14, N22, P9, P10, P11, P12, P13, P14, R10, R11, R12, R13, R14, AB1, AB22	A1, A2, A21, A22, B1, B22, H9, H14, J8, J9, J10, J11, J12, J13, J14, J15, K9, K10, K11, K12, K13, K14, L9, L10, L11, L12, L13, L14, M9, M10, M11, M12, M13, M14, M20, N2, N9, N10, N11, N12, N13, N14, P8, P9, P10, P11, P12, P13, P14, P15, R9, R14, AA1, AA22, AB1, AB2, AB21, AB22
NC[2]	—	—	XP3: 27, 33, 34, 129, 133, 134	—	XP10: C2, C15, C16, C17, D4, D5, D6, D7, D16, D17, E4, E19, W3, W4, W7, W17, W18, W19, W20, Y3, Y15, Y16, AA1, AA2	XP15: B21, C4, C5, C6, C18, C19, C20, C21, D6, D18, E4, E6, E18, F6, L1, L19, L20, M1, M2, M19, M21, N1, N21, N22, P1, P2, U5, U6, U17, U18, V5, V6, V17, V18, W17, W18, W19, Y3, Y4, Y5

1. All grounds must be electrically connected at the board level.
2. NC pins should not be connected to any active signals, V_{CC} or GND.

Petitioners
Ex. 1067, p. 4-6

LFXP3 Logic Signal Connections: 100 TQFP

Pin Number	Pin Function	Bank	Differential	Dual Function
1	CFG1	0	-	-
2	DONE	0	-	-
3	PROGRAMN	7	-	-
4	CCLK	7	-	-
5	PL3A	7	T	LUM0_PLLT_FB_A
6	PL3B	7	C	LUM0_PLLC_FB_A
7	VCCIO7	7	-	-
8	PL5A	7	-	VREF1_7
9	PL6B	7	-	VREF2_7
10	GNDIO7	7	-	-
11	PL7A	7	T[3]	DQS
12	PL7B	7	C[3]	-
13	PL8A	7	T	LUM0_PLLT_IN_A
14	PL8B	7	C	LUM0_PLLC_IN_A
15	PL9A	7	T[3]	-
16	PL9B	7	C[3]	-
17	VCCP0	-	-	-
18	GNDP0	-	-	-
19	PL12A	6	T	PCLKT6_0
20	PL12B	6	C	PCLKC6_0
21	GNDIO6	6	-	-
22	VCCIO6	6	-	-
23	PL18A	6	T[3]	-
24	PL18B	6	C[3]	-
25	VCCAUX	-	-	-
26	SLEEPN[1]/TOE[2]	5	-	-
27	INITN	5	-	-
28	VCC	-	-	-
29	PB2B	5	-	VREF1_5
30	PB5B	5	-	VREF2_5
31	PB8A	5	T	-
32	PB8B	5	C	-
33	GNDIO5	5	-	-
34	PB9A	5	-	-
35	PB10B	5	-	-
36	PB11A	5	T	DQS
37	PB11B	5	C	-
38	VCCIO5	5	-	-
39	PB12A	5	T	-
40	PB12B	5	C	-
41	PB13A	5	T	-
42	PB13B	5	C	-
43	GND	-	-	-

Petitioners
Ex. 1067, p. 4-7

LFXP3 Logic Signal Connections: 100 TQFP (Cont.)

Pin Number	Pin Function	Bank	Differential	Dual Function
44	GNDIO4	4	-	-
45	PB15A	4	T	PCLKT4_0
46	PB15B	4	C	PCLKC4_0
47	VCCIO4	4	-	-
48	PB19A	4	T	DQS
49	PB19B	4	C	VREF1_4
50	PB24A	4	-	VREF2_4
51	PR18B	3	C[3]	-
52	GNDIO3	3	-	-
53	PR18A	3	T[3]	-
54	PR15B	3	-	VREF1_3
55	PR14A	3	-	VREF2_3
56	PR13B	3	C	-
57	PR13A	3	T	-
58	VCCIO3	3	-	-
59	GNDP1	-	-	-
60	VCCP1	-	-	-
61	PR9B	2	C	PCLKC2_0
62	PR9A	2	T	PCLKT2_0
63	PR8B	2	C	RUM0_PLLC_IN_A
64	PR8A	2	T	RUM0_PLLT_IN_A
65	VCCIO2	2	-	-
66	PR6B	2	-	VREF1_2
67	PR5A	2	-	VREF2_2
68	GNDIO2	2	-	-
69	PR3B	2	C	RUM0_PLLC_FB_A
70	PR3A	2	T	RUM0_PLLT_FB_A
71	VCCAUX	-	-	-
72	TDO	-	-	-
73	VCCJ	-	-	-
74	TDI	-	-	-
75	TMS	-	-	-
76	TCK	-	-	-
77	VCC	-	-	-
78	PT24A	1	-	-
79	PT23A	1	-	D0
80	PT22B	1	-	D1
81	PT21A	1	-	D2
82	VCCIO1	1	-	-
83	PT20B	1	-	D3
84	GNDIO1	1	-	-
85	PT17A	1	-	D4
86	PT16A	1	-	D5
87	PT15B	1	-	D6

Petitioners
Ex. 1067, p. 4-8

LFXP3 Logic Signal Connections: 100 TQFP (Cont.)

Pin Number	Pin Function	Bank	Differential	Dual Function
88	PT14B	1	-	D7
89	PT13B	0	C	BUSY
90	GNDIO0	0	-	-
91	PT13A	0	T	CS1N
92	PT12B	0	C	PCLKC0_0
93	PT12A	0	T	PCLKT0_0
94	VCCIO0	0	-	-
95	PT9A	0	-	DOUT
96	PT8A	0	-	WRITEN
97	PT6A	0	-	DI
98	PT5A	0	-	CSN
99	GND	-	-	-
100	CFG0	0	-	-

1. Applies to LFXP “C” only.
2. Applies to LFXP “E” only.
3. Supports dedicated LVDS outputs.

Petitioners
Ex. 1067, p. 4-9

LFXP3 & LFXP6 Logic Signal Connections: 144 TQFP

Pin Number	LFXP3				LFXP6			
	Pin Function	Bank	Differential	Dual Function	Pin Function	Bank	Differential	Dual Function
1	PROGRAMN	7	-	-	PROGRAMN	7	-	-
2	CCLK	7	-	-	CCLK	7	-	-
3	GND	-	-	-	GND	-	-	-
4	PL2A	7	T[3]	-	PL2A	7	T[3]	-
5	PL2B	7	C[3]	-	PL2B	7	C[3]	-
6	PL3A	7	T	LUM0_PLLT_FB_A	PL3A	7	T	LUM0_PLLT_FB_A
7	PL3B	7	C	LUM0_PLLC_FB_A	PL3B	7	C	LUM0_PLLC_FB_A
8	VCCIO7	7	-	-	VCCIO7	7	-	-
9	PL5A	7	-	VREF1_7	PL5A	7	-	VREF1_7
10	PL6B	7	-	VREF2_7	PL6B	7	-	VREF2_7
11	GNDIO7	7	-	-	GNDIO7	7	-	-
12	PL7A	7	T[3]	DQS	PL7A	7	T[3]	DQS
13	PL7B	7	C[3]	-	PL7B	7	C[3]	-
14	VCC	-	-	-	VCC	-	-	-
15	PL8A	7	T	LUM0_PLLT_IN_A	PL8A	7	T	LUM0_PLLT_IN_A
16	PL8B	7	C	LUM0_PLLC_IN_A	PL8B	7	C	LUM0_PLLC_IN_A
17	PL9A	7	T[3]	-	PL9A	7	T[3]	-
18	PL9B	7	C[3]	-	PL9B	7	C[3]	-
19	VCCP0	-	-	-	VCCP0	-	-	-
20	GNDP0	-	-	-	GNDP0	-	-	-
21	VCCIO6	6	-	-	VCCIO6	6	-	-
22	PL11A	6	T[3]	-	PL16A	6	T[3]	-
23	PL11B	6	C[3]	-	PL16B	6	C[3]	-
24	PL12A	6	T	PCLKT6_0	PL17A	6	T	PCLKT6_0
25	PL12B	6	C	PCLKC6_0	PL17B	6	C	PCLKC6_0
26	PL13A	6	T[3]	-	PL18A	6	T[3]	-
27	PL13B	6	C[3]	-	PL18B	6	C[3]	-
28	GNDIO6	6	-	-	GNDIO6	6	-	-
29	PL14A	6	-	VREF1_6	PL22A	6	-	VREF1_6
30	PL15B	6	-	VREF2_6	PL23B	6	-	VREF2_6
31	PL16A	6	T[3]	DQS	PL24A	6	T[3]	DQS
32	PL16B	6	C[3]	-	PL24B	6	C[3]	-
33	PL17A	6	-	-	PL25A	6	-	-
34	PL18A	6	T[3]	-	PL26A	6	T[3]	-
35	PL18B	6	C[3]	-	PL26B	6	C[3]	-
36	VCCAUX	-	-	-	VCCAUX	-	-	-
37	SLEEPN[1]/TOE[2]	5	-	-	SLEEPN[1]/TOE[2]	5	-	-
38	INITN	5	-	-	INITN	5	-	-
39	VCC	-	-	-	VCC	-	-	-
40	PB2B	5	-	VREF1_5	PB5B	5	-	VREF1_5
41	PB5B	5	-	VREF2_5	PB8B	5	-	VREF2_5
42	PB7A	5	T	-	PB10A	5	T	-
43	PB7B	5	C	-	PB10B	5	C	-
44	GNDIO5	5	-	-	GNDIO5	5	-	-
45	PB9A	5	-	-	PB12A	5	-	-
46	PB10B	5	-	-	PB13B	5	-	-

Petitioners
Ex. 1067, p. 4-10

LFXP3 & LFXP6 Logic Signal Connections: 144 TQFP (Cont.)

Pin Number	LFXP3				LFXP6			
	Pin Function	Bank	Differential	Dual Function	Pin Function	Bank	Differential	Dual Function
47	PB11A	5	T	DQS	PB14A	5	T	DQS
48	PB11B	5	C	-	PB14B	5	C	-
49	VCCIO5	5	-	-	VCCIO5	5	-	-
50	PB12A	5	T	-	PB15A	5	T	-
51	PB12B	5	C	-	PB15B	5	C	-
52	PB13A	5	T	-	PB16A	5	T	-
53	PB13B	5	C	-	PB16B	5	C	-
54	GND	-	-	-	GND	-	-	-
55	PB14A	4	T	-	PB17A	4	T	-
56	GNDIO4	4	-	-	GNDIO4	4	-	-
57	PB14B	4	C	-	PB17B	4	C	-
58	PB15A	4	T	PCLKT4_0	PB18A	4	T	PCLKT4_0
59	PB15B	4	C	PCLKC4_0	PB18B	4	C	PCLKC4_0
60	PB16A	4	T	-	PB19A	4	T	-
61	VCCIO4	4	-	-	VCCIO4	4	-	-
62	PB16B	4	C	-	PB19B	4	C	-
63	PB19A	4	T	DQS	PB22A	4	T	DQS
64	GNDIO4	4	-	-	GNDIO4	4	-	-
65	PB19B	4	C	VREF1_4	PB22B	4	C	VREF1_4
66	PB20A	4	T	-	PB23A	4	T	-
67	PB20B	4	C	-	PB23B	4	C	-
68	VCCIO4	4	-	-	VCCIO4	4	-	-
69	PB22A	4	-	-	PB25A	4	-	-
70	PB24A	4	T	VREF2_4	PB27A	4	T	VREF2_4
71	PB24B	4	C	-	PB27B	4	C	-
72	PB25A	4	-	-	PB28A	4	-	-
73	VCC	-	-	-	VCC	-	-	-
74	PR18B	3	C[3]	-	PR26B	3	C[3]	-
75	GNDIO3	3	-	-	GNDIO3	3	-	-
76	PR18A	3	T[3]	-	PR26A	3	T[3]	-
77	PR17B	3	C	-	PR25B	3	C	-
78	PR17A	3	T	-	PR25A	3	T	-
79	PR16B	3	C[3]	-	PR24B	3	C[3]	-
80	PR16A	3	T[3]	DQS	PR24A	3	T[3]	DQS
81	PR15B	3	-	VREF1_3	PR23B	3	-	VREF1_3
82	PR14A	3	-	VREF2_3	PR22A	3	-	VREF2_3
83	PR13B	3	C	-	PR21B	3	C[3]	-
84	PR13A	3	T	-	PR21A	3	T[3]	-
85	GND	-	-	-	GND	-	-	-
86	PR12A	3	-	-	PR20A	3	-	-
87	PR11B	3	C	-	PR19B	3	C[3]	-
88	VCCIO3	3	-	-	VCCIO3	3	-	-
89	PR11A	3	T	-	PR19A	3	T[3]	-
90	GNDP1	-	-	-	GNDP1	-	-	-
91	VCCP1	-	-	-	VCCP1	-	-	-
92	PR9B	2	C	PCLKC2_0	PR12B	2	C	PCLKC2_0

Petitioners
Ex. 1067, p. 4-11

LFXP3 & LFXP6 Logic Signal Connections: 144 TQFP (Cont.)

Pin Number	LFXP3				LFXP6			
	Pin Function	Bank	Differential	Dual Function	Pin Function	Bank	Differential	Dual Function
93	PR9A	2	T	PCLKT2_0	PR12A	2	T	PCLKT2_0
94	PR8B	2	C	RUM0_PLLC_IN_A	PR8B	2	C	RUM0_PLLC_IN_A
95	PR8A	2	T	RUM0_PLLT_IN_A	PR8A	2	T	RUM0_PLLT_IN_A
96	PR7B	2	C[3]	-	PR7B	2	C[3]	-
97	PR7A	2	T[3]	DQS	PR7A	2	T[3]	DQS
98	VCCIO2	2	-	-	VCCIO2	2	-	-
99	PR6B	2	-	VREF1_2	PR6B	2	-	VREF1_2
100	PR5A	2	-	VREF2_2	PR5A	2	-	VREF2_2
101	GNDIO2	2	-	-	GNDIO2	2	-	-
102	PR3B	2	C	RUM0_PLLC_FB_A	PR3B	2	C	RUM0_PLLC_FB_A
103	PR3A	2	T	RUM0_PLLT_FB_A	PR3A	2	T	RUM0_PLLT_FB_A
104	PR2B	2	C[3]	-	PR2B	2	C[3]	-
105	PR2A	2	T[3]	-	PR2A	2	T[3]	-
106	VCCAUX	-	-	-	VCCAUX	-	-	-
107	TDO	-	-	-	TDO	-	-	-
108	VCCJ	-	-	-	VCCJ	-	-	-
109	TDI	-	-	-	TDI	-	-	-
110	TMS	-	-	-	TMS	-	-	-
111	TCK	-	-	-	TCK	-	-	-
112	VCC	-	-	-	VCC	-	-	-
113	PT25A	1	-	VREF1_1	PT28A	1	-	VREF1_1
114	PT24A	1	-	-	PT27A	1	-	-
115	PT23A	1	-	D0	PT26A	1	-	D0
116	PT22B	1	C	D1	PT25B	1	C	D1
117	PT22A	1	T	VREF2_1	PT25A	1	T	VREF2_1
118	PT21A	1	-	D2	PT24A	1	-	D2
119	VCCIO1	1	-	-	VCCIO1	1	-	-
120	PT20B	1	-	D3	PT23B	1	-	D3
121	GNDIO1	1	-	-	GNDIO1	1	-	-
122	PT17A	1	-	D4	PT20A	1	-	D4
123	PT16A	1	-	D5	PT19A	1	-	D5
124	PT15B	1	C	D6	PT18B	1	C	D6
125	PT15A	1	T	-	PT18A	1	T	-
126	PT14B	1	-	D7	PT17B	1	-	D7
127	GND	-	-	-	GND	-	-	-
128	PT13B	0	C	BUSY	PT16B	0	C	BUSY
129	PT13A	0	T	CS1N	PT16A	0	T	CS1N
130	PT12B	0	C	PCLKC0_0	PT15B	0	C	PCLKC0_0
131	PT12A	0	T	PCLKT0_0	PT15A	0	T	PCLKT0_0
132	PT11B	0	C	-	PT14B	0	C	-
133	VCCIO0	0	-	-	VCCIO0	0	-	-
134	PT11A	0	T	DQS	PT14A	0	T	DQS
135	PT9A	0	-	DOUT	PT12A	0	-	DOUT
136	GNDIO0	0	-	-	GNDIO0	0	-	-
137	PT8A	0	-	WRITEN	PT11A	0	-	WRITEN
138	PT7A	0	-	VREF1_0	PT10A	0	-	VREF1_0

Petitioners
Ex. 1067, p. 4-12

LFXP3 & LFXP6 Logic Signal Connections: 144 TQFP (Cont.)

Pin Number	LFXP3				LFXP6			
	Pin Function	Bank	Differential	Dual Function	Pin Function	Bank	Differential	Dual Function
139	PT6A	0	-	DI	PT9A	0	-	DI
140	PT5A	0	-	CSN	PT8A	0	-	CSN
141	PT3B	0	-	VREF2_0	PT6B	0	-	VREF2_0
142	CFG0	0	-	-	CFG0	0	-	-
143	CFG1	0	-	-	CFG1	0	-	-
144	DONE	0	-	-	DONE	0	-	-

1. Applies to LFXP “C” only.
2. Applies to LFXP “E” only.
3. Supports dedicated LVDS outputs.

Petitioners
Ex. 1067, p. 4-13

LFXP3 & LFXP6 Logic Signal Connections: 208 PQFP

Pin Number	LFXP3				LFXP6			
	Pin Function	Bank	Differential	Dual Function	Pin Function	Bank	Differential	Dual Function
1	CFG1	0	-	-	CFG1	0	-	-
2	DONE	0	-	-	DONE	0	-	-
3	PROGRAMN	7	-	-	PROGRAMN	7	-	-
4	CCLK	7	-	-	CCLK	7	-	-
5	GND	-	-	-	GND	-	-	-
6	PL2A	7	T[3]	-	PL2A	7	T[3]	-
7	GNDIO7	7	-	-	GNDIO7	7	-	-
8	PL2B	7	C[3]	-	PL2B	7	C[3]	-
9	PL3A	7	T	LUM0_PLLT_FB_A	PL3A	7	T	LUM0_PLLT_FB_A
10	PL3B	7	C	LUM0_PLLC_FB_A	PL3B	7	C	LUM0_PLLC_FB_A
11	PL4A	7	T[3]	-	PL4A	7	T[3]	-
12	PL4B	7	C[3]	-	PL4B	7	C[3]	-
13	VCCIO7	7	-	-	VCCIO7	7	-	-
14	PL5A	7	-	VREF1_7	PL5A	7	-	VREF1_7
15	PL6B	7	-	VREF2_7	PL6B	7	-	VREF2_7
16	GNDIO7	7	-	-	GNDIO7	7	-	-
17	PL7A	7	T[3]	DQS	PL7A	7	T[3]	DQS
18	PL7B	7	C[3]	-	PL7B	7	C[3]	-
19	VCC	-	-	-	VCC	-	-	-
20	PL8A	7	T	LUM0_PLLT_IN_A	PL8A	7	T	LUM0_PLLT_IN_A
21	PL8B	7	C	LUM0_PLLC_IN_A	PL8B	7	C	LUM0_PLLC_IN_A
22	PL9A	7	T[3]	-	PL9A	7	T[3]	-
23	VCCIO7	7	-	-	VCCIO7	7	-	-
24	PL9B	7	C[3]	-	PL9B	7	C[3]	-
25	VCCP0	-	-	-	VCCP0	-	-	-
26	GNDP0	-	-	-	GNDP0	-	-	-
27	NC	-	-	-	PL15B	6	-	-
28	VCCIO6	6	-	-	VCCIO6	6	-	-
29	PL11A	6	T[3]	-	PL16A	6	T[3]	-
30	PL11B	6	C[3]	-	PL16B	6	C[3]	-
31	PL12A	6	T	PCLKT6_0	PL17A	6	T	PCLKT6_0
32	PL12B	6	C	PCLKC6_0	PL17B	6	C	PCLKC6_0
33	NC	-	-	-	PL18A	6	T[3]	-
34	NC	-	-	-	PL18B	6	C[3]	-
35	VCC	-	-	-	VCC	-	-	-
36	PL13A	6	T[3]	-	PL21A	6	T[3]	-
37	PL13B	6	C[3]	-	PL21B	6	C[3]	-
38	GNDIO6	6	-	-	GNDIO6	6	-	-
39	PL14A	6	-	VREF1_6	PL22A	6	-	VREF1_6
40	PL15B	6	-	VREF2_6	PL23B	6	-	VREF2_6
41	VCCIO6	6	-	-	VCCIO6	6	-	-
42	PL16A	6	T[3]	DQS	PL24A	6	T[3]	DQS
43	PL16B	6	C[3]	-	PL24B	6	C[3]	-
44	PL17A	6	T	-	PL25A	6	T	-
45	PL17B	6	C	-	PL25B	6	C	-
46	PL18A	6	T[3]	-	PL26A	6	T[3]	-

Petitioners
Ex. 1067, p. 4-14

LFXP3 & LFXP6 Logic Signal Connections: 208 PQFP (Cont.)

Pin Number	LFXP3				LFXP6			
	Pin Function	Bank	Differential	Dual Function	Pin Function	Bank	Differential	Dual Function
47	GNDIO6	6	-	-	GNDIO6	6	-	-
48	PL18B	6	C[3]	-	PL26B	6	C[3]	-
49	GND	-	-	-	GND	-	-	-
50	VCCAUX	-	-	-	VCCAUX	-	-	-
51	SLEEPN[1]/TOE[2]	5	-	-	SLEEPN[1]/TOE[2]	5	-	-
52	INITN	5	-	-	INITN	5	-	-
53	VCC	-	-	-	VCC	-	-	-
54	PB2B	5	-	VREF1_5	PB5B	5	-	VREF1_5
55	PB3A	5	T	-	PB6A	5	T	DQS
56	PB3B	5	C	-	PB6B	5	C	-
57	PB4A	5	T	-	PB7A	5	T	-
58	PB4B	5	C	-	PB7B	5	C	-
59	GNDIO5	5	-	-	GNDIO5	5	-	-
60	PB5A	5	T	-	PB8A	5	T	-
61	PB5B	5	C	VREF2_5	PB8B	5	C	VREF2_5
62	PB6A	5	T	-	PB9A	5	T	-
63	PB6B	5	C	-	PB9B	5	C	-
64	VCCIO5	5	-	-	VCCIO5	5	-	-
65	PB7A	5	T	-	PB10A	5	T	-
66	PB7B	5	C	-	PB10B	5	C	-
67	PB8A	5	T	-	PB11A	5	T	-
68	PB8B	5	C	-	PB11B	5	C	-
69	GNDIO5	5	-	-	GNDIO5	5	-	-
70	PB9A	5	-	-	PB12A	5	-	-
71	PB10B	5	-	-	PB13B	5	-	-
72	PB11A	5	T	DQS	PB14A	5	T	DQS
73	PB11B	5	C	-	PB14B	5	C	-
74	VCCIO5	5	-	-	VCCIO5	5	-	-
75	PB12A	5	T	-	PB15A	5	T	-
76	PB12B	5	C	-	PB15B	5	C	-
77	PB13A	5	T	-	PB16A	5	T	-
78	PB13B	5	C	-	PB16B	5	C	-
79	GND	-	-	-	GND	-	-	-
80	VCC	-	-	-	VCC	-	-	-
81	PB14A	4	T	-	PB17A	4	T	-
82	GNDIO4	4	-	-	GNDIO4	4	-	-
83	PB14B	4	C	-	PB17B	4	C	-
84	PB15A	4	T	PCLKT4_0	PB18A	4	T	PCLKT4_0
85	PB15B	4	C	PCLKC4_0	PB18B	4	C	PCLKC4_0
86	PB16A	4	T	-	PB19A	4	T	-
87	VCCIO4	4	-	-	VCCIO4	4	-	-
88	PB16B	4	C	-	PB19B	4	C	-
89	PB17A	4	-	-	PB20A	4	-	-
90	PB18B	4	-	-	PB21B	4	-	-
91	PB19A	4	T	DQS	PB22A	4	T	DQS
92	GNDIO4	4	-	-	GNDIO4	4	-	-

Petitioners
Ex. 1067, p. 4-15

LFXP3 & LFXP6 Logic Signal Connections: 208 PQFP (Cont.)

Pin Number	LFXP3				LFXP6			
	Pin Function	Bank	Differential	Dual Function	Pin Function	Bank	Differential	Dual Function
93	PB19B	4	C	VREF1_4	PB22B	4	C	VREF1_4
94	PB20A	4	T	-	PB23A	4	T	-
95	PB20B	4	C	-	PB23B	4	C	-
96	PB21A	4	T	-	PB24A	4	T	-
97	VCCIO4	4	-	-	VCCIO4	4	-	-
98	PB21B	4	C	-	PB24B	4	C	-
99	PB22A	4	T	-	PB25A	4	T	-
100	PB22B	4	C	-	PB25B	4	C	-
101	PB23A	4	T	-	PB26A	4	T	-
102	PB23B	4	C	-	PB26B	4	C	-
103	PB24A	4	T	VREF2_4	PB27A	4	-	VREF2_4
104	PB24B	4	C	-	PB30A	4	T	DQS
105	PB25A	4	-	-	PB30B	4	C	-
106	GND	-	-	-	GND	-	-	-
107	VCC	-	-	-	VCC	-	-	-
108	PR18B	3	C[3]	-	PR26B	3	C[3]	-
109	GNDIO3	3	-	-	GNDIO3	3	-	-
110	PR18A	3	T[3]	-	PR26A	3	T[3]	-
111	PR17B	3	C	-	PR25B	3	C	-
112	PR17A	3	T	-	PR25A	3	T	-
113	PR16B	3	C[3]	-	PR24B	3	C[3]	-
114	PR16A	3	T[3]	DQS	PR24A	3	T[3]	DQS
115	VCCIO3	3	-	-	VCCIO3	3	-	-
116	PR15B	3	-	VREF1_3	PR23B	3	-	VREF1_3
117	PR14A	3	-	VREF2_3	PR22A	3	-	VREF2_3
118	GNDIO3	3	-	-	GNDIO3	3	-	-
119	PR13B	3	C	-	PR21B	3	C[3]	-
120	PR13A	3	T	-	PR21A	3	T[3]	-
121	GND	-	-	-	GND	-	-	-
122	PR12B	3	C	-	PR20B	3	C	-
123	PR12A	3	T	-	PR20A	3	T	-
124	PR11B	3	C	-	PR19B	3	C[3]	-
125	VCCIO3	3	-	-	VCCIO3	3	-	-
126	PR11A	3	T	-	PR19A	3	T[3]	-
127	GNDP1	-	-	-	GNDP1	-	-	-
128	VCCP1	-	-	-	VCCP1	-	-	-
129	NC	-	-	-	PR13A	2	-	-
130	GND	-	-	-	GND	-	-	-
131	PR9B	2	C	PCLKC2_0	PR12B	2	C	PCLKC2_0
132	PR9A	2	T	PCLKT2_0	PR12A	2	T	PCLKT2_0
133	NC	-	-	-	PR11B	2	C[3]	-
134	NC	-	-	-	PR11A	2	T[3]	-
135	GNDIO2	2	-	-	GNDIO2	2	-	-
136	PR8B	2	C	RUM0_PLLC_IN_A	PR8B	2	C	RUM0_PLLC_IN_A
137	PR8A	2	T	RUM0_PLLT_IN_A	PR8A	2	T	RUM0_PLLT_IN_A
138	PR7B	2	C[3]	-	PR7B	2	C[3]	-

Petitioners
Ex. 1067, p. 4-16

LFXP3 & LFXP6 Logic Signal Connections: 208 PQFP (Cont.)

Pin Number	LFXP3				LFXP6			
	Pin Function	Bank	Differential	Dual Function	Pin Function	Bank	Differential	Dual Function
139	PR7A	2	T[3]	DQS	PR7A	2	T[3]	DQS
140	VCCIO2	2	-	-	VCCIO2	2	-	-
141	PR6B	2	-	VREF1_2	PR6B	2	-	VREF1_2
142	PR5A	2	-	VREF2_2	PR5A	2	-	VREF2_2
143	GNDIO2	2	-	-	GNDIO2	2	-	-
144	PR4B	2	C[3]	-	PR4B	2	C[3]	-
145	PR4A	2	T[3]	-	PR4A	2	T[3]	-
146	PR3B	2	C	RUM0_PLLC_FB_A	PR3B	2	C	RUM0_PLLC_FB_A
147	PR3A	2	T	RUM0_PLLT_FB_A	PR3A	2	T	RUM0_PLLT_FB_A
148	PR2B	2	C[3]	-	PR2B	2	C[3]	-
149	VCCIO2	2	-	-	VCCIO2	2	-	-
150	PR2A	2	T[3]	-	PR2A	2	T[3]	-
151	VCC	-	-	-	VCC	-	-	-
152	VCCAUX	-	-	-	VCCAUX	-	-	-
153	TDO	-	-	-	TDO	-	-	-
154	VCCJ	-	-	-	VCCJ	-	-	-
155	TDI	-	-	-	TDI	-	-	-
156	TMS	-	-	-	TMS	-	-	-
157	TCK	-	-	-	TCK	-	-	-
158	VCC	-	-	-	VCC	-	-	-
159	PT25A	1	-	VREF1_1	PT28A	1	-	VREF1_1
160	PT24B	1	C	-	PT27B	1	C	-
161	PT24A	1	T	-	PT27A	1	T	-
162	PT23A	1	-	D0	PT26A	1	-	D0
163	GNDIO1	1	-	-	GNDIO1	1	-	-
164	PT22B	1	C	D1	PT25B	1	C	D1
165	PT22A	1	T	VREF2_1	PT25A	1	T	VREF2_1
166	PT21A	1	-	D2	PT24A	1	-	D2
167	VCCIO1	1	-	-	VCCIO1	1	-	-
168	PT20B	1	C	D3	PT23B	1	C	D3
169	PT20A	1	T	-	PT23A	1	T	-
170	PT19B	1	C	-	PT22B	1	C	-
171	PT19A	1	T	DQS	PT22A	1	T	DQS
172	GNDIO1	1	-	-	GNDIO1	1	-	-
173	PT18B	1	-	-	PT21B	1	-	-
174	PT17A	1	-	D4	PT20A	1	-	D4
175	PT16B	1	C	-	PT19B	1	C	-
176	PT16A	1	T	D5	PT19A	1	T	D5
177	VCCIO1	1	-	-	VCCIO1	1	-	-
178	PT15B	1	C	D6	PT18B	1	C	D6
179	PT15A	1	T	-	PT18A	1	T	-
180	PT14B	1	-	D7	PT17B	1	-	D7
181	GND	-	-	-	GND	-	-	-
182	VCC	-	-	-	VCC	-	-	-
183	PT13B	0	C	BUSY	PT16B	0	C	BUSY
184	GNDIO0	0	-	-	GNDIO0	0	-	-

Petitioners
Ex. 1067, p. 4-17

LFXP3 & LFXP6 Logic Signal Connections: 208 PQFP (Cont.)

Pin Number	LFXP3				LFXP6			
	Pin Function	Bank	Differential	Dual Function	Pin Function	Bank	Differential	Dual Function
185	PT13A	0	T	CS1N	PT16A	0	T	CS1N
186	PT12B	0	C	PCLKC0_0	PT15B	0	C	PCLKC0_0
187	PT12A	0	T	PCLKT0_0	PT15A	0	T	PCLKT0_0
188	PT11B	0	C	-	PT14B	0	C	-
189	VCCIO0	0	-	-	VCCIO0	0	-	-
190	PT11A	0	T	DQS	PT14A	0	T	DQS
191	PT10B	0	-	-	PT13B	0	-	-
192	PT9A	0	-	DOUT	PT12A	0	-	DOUT
193	PT8B	0	C	-	PT11B	0	C	-
194	GNDIO0	0	-	-	GNDIO0	0	-	-
195	PT8A	0	T	WRITEN	PT11A	0	T	WRITEN
196	PT7B	0	C	-	PT10B	0	C	-
197	PT7A	0	T	VREF1_0	PT10A	0	T	VREF1_0
198	PT6B	0	C	-	PT9B	0	C	-
199	VCCIO0	0	-	-	VCCIO0	0	-	-
200	PT6A	0	T	DI	PT9A	0	T	DI
201	PT5B	0	C	-	PT8B	0	C	-
202	PT5A	0	T	CSN	PT8A	0	T	CSN
203	PT4B	0	C	-	PT7B	0	C	-
204	PT4A	0	T	-	PT7A	0	T	-
205	PT3B	0	-	VREF2_0	PT6B	0	-	VREF2_0
206	PT2B	0	-	-	PT5B	0	-	-
207	GND	-	-	-	GND	-	-	-
208	CFG0	0	-	-	CFG0	0	-	-

1. Applies to LFXP “C” only.
2. Applies to LFXP “E” only.
3. Supports dedicated LVDS outputs.

Petitioners
Ex. 1067, p. 4-18

LFXP6 & LFXP10 Logic Signal Connections: 256 fpBGA

	LFXP6				LFXP10			
Ball Number	Ball Function	Bank	Differential	Dual Function	Ball Function	Bank	Differential	Dual Function
C2	PROGRAMN	7	-	-	PROGRAMN	7	-	-
C1	CCLK	7	-	-	CCLK	7	-	-
-	GNDIO7	7	-	-	GNDIO7	7	-	-
D2	PL3A	7	T	LUM0_PLLT_FB_A	PL3A	7	T	LUM0_PLLT_FB_A
D3	PL3B	7	C	LUM0_PLLC_FB_A	PL3B	7	C	LUM0_PLLC_FB_A
D1	PL2A	7	T[3]	-	PL5A	7	-	-
E2	PL5A	7	-	VREF1_7	PL6B	7	-	VREF1_7
-	GNDIO7	7	-	-	GNDIO7	7	-	-
E1	PL7A	7	T[3]	DQS	PL7A	7	T[3]	DQS
F1	PL7B	7	C[3]	-	PL7B	7	C[3]	-
E3	PL12A	7	T	-	PL8A	7	T	-
F4	PL12B	7	C	-	PL8B	7	C	-
F3	PL4A	7	T[3]	-	PL9A	7	T[3]	-
F2	PL4B	7	C[3]	-	PL9B	7	C[3]	-
-	GNDIO7	7	-	-	GNDIO7	7	-	-
G1	PL2B	7	C[3]	-	PL11B	7	-	-
G3	PL8A	7	T	LUM0_PLLT_IN_A	PL12A	7	T	LUM0_PLLT_IN_A
G2	PL8B	7	C	LUM0_PLLC_IN_A	PL12B	7	C	LUM0_PLLC_IN_A
H1	PL9A	7	T[3]	-	PL13A	7	T[3]	-
H2	PL9B	7	C[3]	-	PL13B	7	C[3]	-
G4	PL6B	7	-	VREF2_7	PL14A	7	-	VREF2_7
G5	PL14A	7	-	-	PL15B	7	-	-
-	GNDIO7	7	-	-	GNDIO7	7	-	-
J1	PL11A	7	T[3]	-	PL16A	7	T[3]	DQS
J2	PL11B	7	C[3]	-	PL16B	7	C[3]	-
H3	PL13A	7	T[3]	-	PL18A	7	T[3]	-
J3	PL13B	7	C[3]	-	PL18B	7	C[3]	-
H4	VCCP0	-	-	-	VCCP0	-	-	-
H5	GNDP0	-	-	-	GNDP0	-	-	-
K1	PL17A	6	T	PCLKT6_0	PL20A	6	T	PCLKT6_0
K2	PL17B	6	C	PCLKC6_0	PL20B	6	C	PCLKC6_0
-	GNDIO6	6	-	-	GNDIO6	6	-	-
J4	PL15B	6	-	-	PL22A	6	-	-
J5	PL22A	6	-	VREF1_6	PL23B	6	-	VREF1_6
L1	PL16A	6	T[3]	-	PL24A	6	T[3]	DQS
L2	PL16B	6	C[3]	-	PL24B	6	C[3]	-
M1	PL18A	6	T[3]	-	PL25A	6	T	LLM0_PLLT_IN_A
M2	PL18B	6	C[3]	-	PL25B	6	C	LLM0_PLLC_IN_A
K3	PL19A	6	T[3]	-	PL26A	6	T[3]	-
-	GNDIO6	6	-	-	GNDIO6	6	-	-
L3	PL19B	6	C[3]	-	PL26B	6	C[3]	-
L4	PL21A	6	T[3]	-	PL28A	6	-	-

Petitioners
Ex. 1067, p. 4-19

LFXP6 & LFXP10 Logic Signal Connections: 256 fpBGA (Cont.)

	LFXP6				LFXP10			
Ball Number	Ball Function	Bank	Differential	Dual Function	Ball Function	Bank	Differential	Dual Function
K4	PL20A	6	T	-	PL29A	6	T	-
K5	PL20B	6	C	-	PL29B	6	C	-
-	GNDIO6	6	-	-	GNDIO6	6	-	-
N1	PL23B	6	-	VREF2_6	PL31A	6	-	VREF2_6
N2	PL21B	6	C[3]	-	PL32B	6	-	-
P1	PL24A	6	T[3]	DQS	PL33A	6	T[3]	DQS
P2	PL24B	6	C[3]	-	PL33B	6	C[3]	-
L5	PL25A	6	T	-	PL34A	6	T	LLM0_PLLT_FB_A
M6	PL25B	6	C	-	PL34B	6	C	LLM0_PLLC_FB_A
M3	PL26A	6	T[3]	-	PL35A	6	T[3]	-
-	GNDIO6	6	-	-	GNDIO6	6	-	-
N3	PL26B	6	C[3]	-	PL35B	6	C[3]	-
P4	SLEEPN[1]/TOE[2]	5	-	-	SLEEPN[1]/TOE[2]	5	-	-
P3	INITN	5	-	-	INITN	5	-	-
-	GNDIO5	5	-	-	GNDIO5	5	-	-
R4	PB2A	5	T	-	PB6A	5	T	-
N5	PB2B	5	C	-	PB6B	5	C	-
-	GNDIO5	5	-	-	GNDIO5	5	-	-
P5	PB5B	5	-	VREF1_5	PB7A	5	T	VREF1_5
R1	PB3B	5	C	-	PB7B	5	C	-
N6	PB4A	5	-	-	PB8A	5	-	-
M7	PB3A	5	T	-	PB9B	5	-	-
R2	PB6A	5	T	DQS	PB10A	5	T	DQS
T2	PB6B	5	C	-	PB10B	5	C	-
R3	PB7A	5	T	-	PB11A	5	T	-
T3	PB7B	5	C	-	PB11B	5	C	-
-	GNDIO5	5	-	-	GNDIO5	5	-	-
T4	PB8A	5	T	-	PB12A	5	T	-
R5	PB8B	5	C	VREF2_5	PB12B	5	C	VREF2_5
N7	PB9A	5	T	-	PB13A	5	T	-
M8	PB9B	5	C	-	PB13B	5	C	-
T5	PB10A	5	T	-	PB14A	5	T	-
P6	PB10B	5	C	-	PB14B	5	C	-
T6	PB11A	5	T	-	PB15A	5	T	-
R6	PB11B	5	C	-	PB15B	5	C	-
-	GNDIO5	5	-	-	GNDIO5	5	-	-
P7	PB12A	5	-	-	PB16A	5	-	-
N8	PB13B	5	-	-	PB17B	5	-	-
R7	PB14A	5	T	DQS	PB18A	5	T	DQS
T7	PB14B	5	C	-	PB18B	5	C	-
P8	PB15A	5	T	-	PB19A	5	T	-
T8	PB15B	5	C	-	PB19B	5	C	-

Petitioners
Ex. 1067, p. 4-20

LFXP6 & LFXP10 Logic Signal Connections: 256 fpBGA (Cont.)

	LFXP6				LFXP10			
Ball Number	Ball Function	Bank	Differential	Dual Function	Ball Function	Bank	Differential	Dual Function
R8	PB16A	5	T	-	PB20A	5	T	-
T9	PB16B	5	C	-	PB20B	5	C	-
R9	PB17A	4	T	-	PB21A	4	T	-
-	GNDIO4	4	-	-	GNDIO4	4	-	-
P9	PB17B	4	C	-	PB21B	4	C	-
T10	PB18A	4	T	PCLKT4_0	PB22A	4	T	PCLKT4_0
T11	PB18B	4	C	PCLKC4_0	PB22B	4	C	PCLKC4_0
R10	PB19A	4	T	-	PB23A	4	T	-
P10	PB19B	4	C	-	PB23B	4	C	-
N9	PB20A	4	-	-	PB24A	4	-	-
M9	PB21B	4	-	-	PB25B	4	-	-
R12	PB22A	4	T	DQS	PB26A	4	T	DQS
-	GNDIO4	4	-	-	GNDIO4	4	-	-
T12	PB22B	4	C	VREF1_4	PB26B	4	C	VREF1_4
P13	PB23A	4	T	-	PB27A	4	T	-
R13	PB23B	4	C	-	PB27B	4	C	-
M11	PB24A	4	T	-	PB28A	4	T	-
N11	PB24B	4	C	-	PB28B	4	C	-
N10	PB25A	4	T	-	PB29A	4	T	-
M10	PB25B	4	C	-	PB29B	4	C	-
T13	PB26A	4	T	-	PB30A	4	T	-
-	GNDIO4	4	-	-	GNDIO4	4	-	-
P14	PB26B	4	C	-	PB30B	4	C	-
R11	PB27A	4	T	VREF2_4	PB31A	4	T	VREF2_4
P12	PB27B	4	C	-	PB31B	4	C	-
T14	PB28A	4	-	-	PB32A	4	-	-
R14	PB29B	4	-	-	PB33B	4	-	-
P11	PB30A	4	T	DQS	PB34A	4	T	DQS
N12	PB30B	4	C	-	PB34B	4	C	-
T15	PB31A	4	T	-	PB35A	4	T	-
-	GNDIO4	4	-	-	GNDIO4	4	-	-
R15	PB31B	4	C	-	PB35B	4	C	-
-	GNDIO3	3	-	-	GNDIO3	3	-	-
P15	PR26B	3	C[3]	-	PR34B	3	C	RLM0_PLLC_FB_A
N15	PR26A	3	T[3]	-	PR34A	3	T	RLM0_PLLT_FB_A
P16	PR24B	3	C[3]	-	PR33B	3	C[3]	-
R16	PR24A	3	T[3]	DQS	PR33A	3	T[3]	DQS
M15	PR15B	3	-	-	PR32B	3	-	-
N14	PR23B	3	-	VREF1_3	PR31A	3	-	VREF1_3
-	GNDIO3	3	-	-	GNDIO3	3	-	-
M14	PR25B	3	C	-	PR29B	3	C	-
L13	PR25A	3	T	-	PR29A	3	T	-

Petitioners
Ex. 1067, p. 4-21

LFXP6 & LFXP10 Logic Signal Connections: 256 fpBGA (Cont.)

	LFXP6				LFXP10			
Ball Number	Ball Function	Bank	Differential	Dual Function	Ball Function	Bank	Differential	Dual Function
L15	PR21B	3	C[3]	-	PR28B	3	C[3]	-
L14	PR21A	3	T[3]	-	PR28A	3	T[3]	-
-	GNDIO3	3	-	-	GNDIO3	3	-	-
L12	PR17B	3	C	-	PR26A	3	-	-
M16	PR20B	3	C	-	PR25B	3	C	RLM0_PLLC_IN_A
N16	PR20A	3	T	-	PR25A	3	T	RLM0_PLLT_IN_A
K14	PR19B	3	C[3]	-	PR24B	3	C[3]	-
K15	PR19A	3	T[3]	-	PR24A	3	T[3]	DQS
K12	PR17A	3	T	-	PR23B	3	-	-
K13	PR22A	3	-	VREF2_3	PR22A	3	-	VREF2_3
-	GNDIO3	3	-	-	GNDIO3	3	-	-
L16	PR18B	3	C[3]	-	PR21B	3	C[3]	-
K16	PR18A	3	T[3]	-	PR21A	3	T[3]	-
J15	PR16B	3	C[3]	-	PR19B	3	C[3]	-
J14	PR16A	3	T[3]	-	PR19A	3	T[3]	-
J13	GNDP1	-	-	-	GNDP1	-	-	-
J12	VCCP1	-	-	-	VCCP1	-	-	-
-	GNDIO2	2	-	-	GNDIO2	2	-	-
J16	PR12B	2	C	PCLKC2_0	PR17B	2	C	PCLKC2_0
H16	PR12A	2	T	PCLKT2_0	PR17A	2	T	PCLKT2_0
H13	PR13B	2	C[3]	-	PR16B	2	C[3]	-
H12	PR13A	2	T[3]	-	PR16A	2	T[3]	DQS
H15	PR2B	2	C[3]	-	PR15B	2	-	-
H14	PR6B	2	-	VREF1_2	PR14A	2	-	VREF1_2
-	GNDIO2	2	-	-	GNDIO2	2	-	-
G15	PR11B	2	C[3]	-	PR13B	2	C[3]	-
G14	PR11A	2	T[3]	-	PR13A	2	T[3]	-
G16	PR8B	2	C	RUM0_PLLC_IN_A	PR12B	2	C	RUM0_PLLC_IN_A
F16	PR8A	2	T	RUM0_PLLT_IN_A	PR12A	2	T	RUM0_PLLT_IN_A
G13	PR2A	2	T[3]	-	PR11B	2	-	-
-	GNDIO2	2	-	-	GNDIO2	2	-	-
G12	PR9B	2	C[3]	-	PR8B	2	C	-
F13	PR9A	2	T[3]	-	PR8A	2	T	-
B16	PR7B	2	C[3]	-	PR7B	2	C[3]	-
C16	PR7A	2	T[3]	DQS	PR7A	2	T[3]	DQS
F15	PR14A	2	-	-	PR6B	2	-	-
E15	PR5A	2	-	VREF2_2	PR5A	2	-	VREF2_2
-	GNDIO2	2	-	-	GNDIO2	2	-	-
F14	PR4B	2	C[3]	-	PR4B	2	C[3]	-
E14	PR4A	2	T[3]	-	PR4A	2	T[3]	-
D15	PR3B	2	C	RUM0_PLLC_FB_A	PR3B	2	C	RUM0_PLLC_FB_A
C15	PR3A	2	T	RUM0_PLLT_FB_A	PR3A	2	T	RUM0_PLLT_FB_A

Petitioners
Ex. 1067, p. 4-22

LFXP6 & LFXP10 Logic Signal Connections: 256 fpBGA (Cont.)

	LFXP6				LFXP10			
Ball Number	Ball Function	Bank	Differential	Dual Function	Ball Function	Bank	Differential	Dual Function
E16	TDO	-	-	-	TDO	-	-	-
D16	VCCJ	-	-	-	VCCJ	-	-	-
D14	TDI	-	-	-	TDI	-	-	-
C14	TMS	-	-	-	TMS	-	-	-
B14	TCK	-	-	-	TCK	-	-	-
-	GNDIO1	1	-	-	GNDIO1	1	-	-
A15	PT31B	1	C	-	PT35B	1	C	-
B15	PT31A	1	T	-	PT35A	1	T	-
-	GNDIO1	1	-	-	GNDIO1	1	-	-
D12	PT28A	1	-	VREF1_1	PT34B	1	C	VREF1_1
C11	PT30A	1	T	DQS	PT34A	1	T	DQS
A14	PT29B	1	-	-	PT33B	1	-	-
B13	PT30B	1	C	-	PT32A	1	-	-
F12	PT27B	1	C	-	PT31B	1	C	-
E11	PT27A	1	T	-	PT31A	1	T	-
A13	PT26B	1	C	-	PT30B	1	C	-
C13	PT26A	1	T	D0	PT30A	1	T	D0
-	GNDIO1	1	-	-	GNDIO1	1	-	-
C10	PT25B	1	C	D1	PT29B	1	C	D1
E10	PT25A	1	T	VREF2_1	PT29A	1	T	VREF2_1
A12	PT24B	1	C	-	PT28B	1	C	-
B12	PT24A	1	T	D2	PT28A	1	T	D2
C12	PT23B	1	C	D3	PT27B	1	C	D3
A11	PT23A	1	T	-	PT27A	1	T	-
B11	PT22B	1	C	-	PT26B	1	C	-
D11	PT22A	1	T	DQS	PT26A	1	T	DQS
-	GNDIO1	1	-	-	GNDIO1	1	-	-
B9	PT21B	1	-	-	PT25B	1	-	-
D9	PT20A	1	-	D4	PT24A	1	-	D4
A10	PT19B	1	C	-	PT23B	1	C	-
B10	PT19A	1	T	D5	PT23A	1	T	D5
D10	PT18B	1	C	D6	PT22B	1	C	D6
A9	PT18A	1	T	-	PT22A	1	T	-
C9	PT17B	1	C	D7	PT21B	1	C	D7
C8	PT17A	1	T	-	PT21A	1	T	-
E9	PT16B	0	C	BUSY	PT20B	0	C	BUSY
-	GNDIO0	0	-	-	GNDIO0	0	-	-
B8	PT16A	0	T	CS1N	PT20A	0	T	CS1N
A8	PT15B	0	C	PCLKC0_0	PT19B	0	C	PCLKC0_0
A7	PT15A	0	T	PCLKT0_0	PT19A	0	T	PCLKT0_0
B7	PT14B	0	C	-	PT18B	0	C	-
C7	PT14A	0	T	DQS	PT18A	0	T	DQS

Petitioners
Ex. 1067, p. 4-23

LFXP6 & LFXP10 Logic Signal Connections: 256 fpBGA (Cont.)

	LFXP6				LFXP10			
Ball Number	Ball Function	Bank	Differential	Dual Function	Ball Function	Bank	Differential	Dual Function
E8	PT13B	0	-	-	PT17B	0	-	-
D8	PT12A	0	-	DOUT	PT16A	0	-	DOUT
A6	PT11B	0	C	-	PT15B	0	C	-
-	GNDIO0	0	-	-	GNDIO0	0	-	-
C6	PT11A	0	T	WRITEN	PT15A	0	T	WRITEN
E7	PT10B	0	C	-	PT14B	0	C	-
D7	PT10A	0	T	VREF1_0	PT14A	0	T	VREF1_0
A5	PT9B	0	C	-	PT13B	0	C	-
B5	PT9A	0	T	DI	PT13A	0	T	DI
A4	PT8B	0	C	-	PT12B	0	C	-
B6	PT8A	0	T	CSN	PT12A	0	T	CSN
E6	PT7B	0	C	-	PT11B	0	C	-
-	GNDIO0	0	-	-	GNDIO0	0	-	-
D6	PT7A	0	T	-	PT11A	0	T	-
D5	PT6B	0	C	VREF2_0	PT10B	0	C	VREF2_0
A3	PT6A	0	T	DQS	PT10A	0	T	DQS
B3	PT5B	0	-	-	PT9B	0	-	-
B2	PT4A	0	-	-	PT8A	0	-	-
A2	PT3B	0	C	-	PT7B	0	C	-
B1	PT3A	0	T	-	PT7A	0	T	-
F5	PT2B	0	C	-	PT6B	0	C	-
-	GNDIO0	0	-	-	GNDIO0	0	-	-
C5	PT2A	0	T	-	PT6A	0	T	-
C4	CFG0	0	-	-	CFG0	0	-	-
B4	CFG1	0	-	-	CFG1	0	-	-
C3	DONE	0	-	-	DONE	0	-	-
A1	GND	-	-	-	GND	-	-	-
A16	GND	-	-	-	GND	-	-	-
F11	GND	-	-	-	GND	-	-	-
F6	GND	-	-	-	GND	-	-	-
G10	GND	-	-	-	GND	-	-	-
G7	GND	-	-	-	GND	-	-	-
G8	GND	-	-	-	GND	-	-	-
G9	GND	-	-	-	GND	-	-	-
H10	GND	-	-	-	GND	-	-	-
H7	GND	-	-	-	GND	-	-	-
H8	GND	-	-	-	GND	-	-	-
H9	GND	-	-	-	GND	-	-	-
J10	GND	-	-	-	GND	-	-	-
J7	GND	-	-	-	GND	-	-	-
J8	GND	-	-	-	GND	-	-	-
J9	GND	-	-	-	GND	-	-	-

Petitioners
Ex. 1067, p. 4-24

LFXP6 & LFXP10 Logic Signal Connections: 256 fpBGA (Cont.)

	LFXP6				LFXP10			
Ball Number	Ball Function	Bank	Differential	Dual Function	Ball Function	Bank	Differential	Dual Function
K10	GND	-	-	-	GND	-	-	-
K7	GND	-	-	-	GND	-	-	-
K8	GND	-	-	-	GND	-	-	-
K9	GND	-	-	-	GND	-	-	-
L11	GND	-	-	-	GND	-	-	-
L6	GND	-	-	-	GND	-	-	-
T1	GND	-	-	-	GND	-	-	-
T16	GND	-	-	-	GND	-	-	-
D13	VCC	-	-	-	VCC	-	-	-
D4	VCC	-	-	-	VCC	-	-	-
E12	VCC	-	-	-	VCC	-	-	-
E5	VCC	-	-	-	VCC	-	-	-
M12	VCC	-	-	-	VCC	-	-	-
M5	VCC	-	-	-	VCC	-	-	-
N13	VCC	-	-	-	VCC	-	-	-
N4	VCC	-	-	-	VCC	-	-	-
E13	VCCAUX	-	-	-	VCCAUX	-	-	-
E4	VCCAUX	-	-	-	VCCAUX	-	-	-
M13	VCCAUX	-	-	-	VCCAUX	-	-	-
M4	VCCAUX	-	-	-	VCCAUX	-	-	-
F7	VCCIO0	0	-	-	VCCIO0	0	-	-
F8	VCCIO0	0	-	-	VCCIO0	0	-	-
F10	VCCIO1	1	-	-	VCCIO1	1	-	-
F9	VCCIO1	1	-	-	VCCIO1	1	-	-
G11	VCCIO2	2	-	-	VCCIO2	2	-	-
H11	VCCIO2	2	-	-	VCCIO2	2	-	-
J11	VCCIO3	3	-	-	VCCIO3	3	-	-
K11	VCCIO3	3	-	-	VCCIO3	3	-	-
L10	VCCIO4	4	-	-	VCCIO4	4	-	-
L9	VCCIO4	4	-	-	VCCIO4	4	-	-
L7	VCCIO5	5	-	-	VCCIO5	5	-	-
L8	VCCIO5	5	-	-	VCCIO5	5	-	-
J6	VCCIO6	6	-	-	VCCIO6	6	-	-
K6	VCCIO6	6	-	-	VCCIO6	6	-	-
G6	VCCIO7	7	-	-	VCCIO7	7	-	-
H6	VCCIO7	7	-	-	VCCIO7	7	-	-

1. Applies to LFXP “C” only.
2. Applies to LFXP “E” only.
3. Supports dedicated LVDS outputs.

Petitioners
Ex. 1067, p. 4-25

LFXP15 & LFXP20 Logic Signal Connections: 256 fpBGA

	LFXP15				LFXP20			
Ball Number	Ball Function	Bank	Differential	Dual Function	Ball Function	Bank	Differential	Dual Function
C2	PROGRAMN	7	-	-	PROGRAMN	7	-	-
C1	CCLK	7	-	-	CCLK	7	-	-
-	GNDIO7	7	-	-	GNDIO7	7	-	-
-	GNDIO7	7	-	-	GNDIO7	7	-	-
D2	PL7A	7	T	LUM0_PLLT_FB_A	PL7A	7	T	LUM0_PLLT_FB_A
D3	PL7B	7	C	LUM0_PLLC_FB_A	PL7B	7	C	LUM0_PLLC_FB_A
D1	PL9A	7	-	-	PL9A	7	-	-
E2	PL10B	7	-	VREF1_7	PL10B	7	-	VREF1_7
E1	PL11A	7	T[3]	DQS	PL11A	7	T[3]	DQS
F1	PL11B	7	C[3]	-	PL11B	7	C[3]	-
-	GNDIO7	7	-	-	GNDIO7	7	-	-
E3	PL12A	7	T	-	PL12A	7	T	-
F4	PL12B	7	C	-	PL12B	7	C	-
F3	PL13A	7	T[3]	-	PL13A	7	T[3]	-
F2	PL13B	7	C[3]	-	PL13B	7	C[3]	-
G1	PL15B	7	-	-	PL15B	7	-	-
-	GNDIO7	7	-	-	GNDIO7	7	-	-
G3	PL16A	7	T	LUM0_PLLT_IN_A	PL16A	7	T	LUM0_PLLT_IN_A
G2	PL16B	7	C	LUM0_PLLC_IN_A	PL16B	7	C	LUM0_PLLC_IN_A
H1	PL17A	7	T[3]	-	PL17A	7	T[3]	-
H2	PL17B	7	C[3]	-	PL17B	7	C[3]	-
G4	PL18A	7	-	VREF2_7	PL18A	7	-	VREF2_7
G5	PL19B	7	-	-	PL19B	7	-	-
J1	PL20A	7	T[3]	DQS	PL20A	7	T[3]	DQS
-	GNDIO7	7	-	-	GNDIO7	7	-	-
J2	PL20B	7	C[3]	-	PL20B	7	C[3]	-
H3	PL22A	7	T[3]	-	PL22A	7	T[3]	-
J3	PL22B	7	C[3]	-	PL22B	7	C[3]	-
H4	VCCP0	-	-	-	VCCP0	-	-	-
H5	GNDP0	-	-	-	GNDP0	-	-	-
K1	PL24A	6	T	PCLKT6_0	PL28A	6	T	PCLKT6_0
-	GNDIO6	6	-	-	GNDIO6	6	-	-
K2	PL24B	6	C	PCLKC6_0	PL28B	6	C	PCLKC6_0
J4	PL26A	6	-	-	PL30A	6	-	-
J5	PL27B	6	-	VREF1_6	PL31B	6	-	VREF1_6
L1	PL28A	6	T[3]	DQS	PL32A	6	T[3]	DQS
L2	PL28B	6	C[3]	-	PL32B	6	C[3]	-
-	GNDIO6	6	-	-	GNDIO6	6	-	-
M1	PL29A	6	T	LLM0_PLLT_IN_A	PL33A	6	T	LLM0_PLLT_IN_A
M2	PL29B	6	C	LLM0_PLLC_IN_A	PL33B	6	C	LLM0_PLLC_IN_A
K3	PL30A	6	T[3]	-	PL34A	6	T[3]	-
L3	PL30B	6	C[3]	-	PL34B	6	C[3]	-

Petitioners
Ex. 1067, p. 4-26

LFXP15 & LFXP20 Logic Signal Connections: 256 fpBGA (Cont.)

	LFXP15				LFXP20			
Ball Number	Ball Function	Bank	Differential	Dual Function	Ball Function	Bank	Differential	Dual Function
L4	PL32A	6	-	-	PL36A	6	-	-
-	GNDIO6	6	-	-	GNDIO6	6	-	-
K4	PL33A	6	T	-	PL37A	6	T	-
K5	PL33B	6	C	-	PL37B	6	C	-
N1	PL35A	6	-	VREF2_6	PL39A	6	-	VREF2_6
N2	PL36B	6	-	-	PL40B	6	-	-
P1	PL37A	6	T[3]	DQS	PL41A	6	T[3]	DQS
P2	PL37B	6	C[3]	-	PL41B	6	C[3]	-
-	GNDIO6	6	-	-	GNDIO6	6	-	-
L5	PL38A	6	T	LLM0_PLLT_FB_A	PL42A	6	T	LLM0_PLLT_FB_A
M6	PL38B	6	C	LLM0_PLLC_FB_A	PL42B	6	C	LLM0_PLLC_FB_A
M3	PL39A	6	T[3]	-	PL43A	6	T[3]	-
N3	PL39B	6	C[3]	-	PL43B	6	C[3]	-
-	GNDIO6	6	-	-	GNDIO6	6	-	-
P4	SLEEPN[1]/TOE[2]	5	-	-	SLEEPN[1]/TOE[2]	5	-	-
P3	INITN	5	-	-	INITN	5	-	-
-	GNDIO5	5	-	-	GNDIO5	5	-	-
-	GNDIO5	5	-	-	GNDIO5	5	-	-
-	GNDIO5	5	-	-	GNDIO5	5	-	-
R4	PB11A	5	T	-	PB15A	5	T	-
N5	PB11B	5	C	-	PB15B	5	C	-
P5	PB12A	5	T	VREF1_5	PB16A	5	T	VREF1_5
-	GNDIO5	5	-	-	GNDIO5	5	-	-
R1	PB12B	5	C	-	PB16B	5	C	-
N6	PB13A	5	-	-	PB17A	5	-	-
M7	PB14B	5	-	-	PB18B	5	-	-
R2	PB15A	5	T	DQS	PB19A	5	T	DQS
T2	PB15B	5	C	-	PB19B	5	C	-
R3	PB16A	5	T	-	PB20A	5	T	-
T3	PB16B	5	C	-	PB20B	5	C	-
T4	PB17A	5	T	-	PB21A	5	T	-
R5	PB17B	5	C	VREF2_5	PB21B	5	C	VREF2_5
N7	PB18A	5	T	-	PB22A	5	T	-
-	GNDIO5	5	-	-	GNDIO5	5	-	-
M8	PB18B	5	C	-	PB22B	5	C	-
T5	PB19A	5	T	-	PB23A	5	T	-
P6	PB19B	5	C	-	PB23B	5	C	-
T6	PB20A	5	T	-	PB24A	5	T	-
R6	PB20B	5	C	-	PB24B	5	C	-
P7	PB21A	5	-	-	PB25A	5	-	-
N8	PB22B	5	-	-	PB26B	5	-	-
R7	PB23A	5	T	DQS	PB27A	5	T	DQS

Petitioners
Ex. 1067, p. 4-27

LFXP15 & LFXP20 Logic Signal Connections: 256 fpBGA (Cont.)

	LFXP15				LFXP20			
Ball Number	Ball Function	Bank	Differential	Dual Function	Ball Function	Bank	Differential	Dual Function
T7	PB23B	5	C	-	PB27B	5	C	-
-	GNDIO5	5	-	-	GNDIO5	5	-	-
P8	PB24A	5	T	-	PB28A	5	T	-
T8	PB24B	5	C	-	PB28B	5	C	-
R8	PB25A	5	T	-	PB29A	5	T	-
T9	PB25B	5	C	-	PB29B	5	C	-
R9	PB26A	4	T	-	PB30A	4	T	-
P9	PB26B	4	C	-	PB30B	4	C	-
T10	PB27A	4	T	PCLKT4_0	PB31A	4	T	PCLKT4_0
T11	PB27B	4	C	PCLKC4_0	PB31B	4	C	PCLKC4_0
-	GNDIO4	4	-	-	GNDIO4	4	-	-
R10	PB28A	4	T	-	PB32A	4	T	-
P10	PB28B	4	C	-	PB32B	4	C	-
N9	PB29A	4	-	-	PB33A	4	-	-
M9	PB30B	4	-	-	PB34B	4	-	-
R12	PB31A	4	T	DQS	PB35A	4	T	DQS
T12	PB31B	4	C	VREF1_4	PB35B	4	C	VREF1_4
P13	PB32A	4	T	-	PB36A	4	T	-
R13	PB32B	4	C	-	PB36B	4	C	-
M11	PB33A	4	T	-	PB37A	4	T	-
-	GNDIO4	4	-	-	GNDIO4	4	-	-
N11	PB33B	4	C	-	PB37B	4	C	-
N10	PB34A	4	T	-	PB38A	4	T	-
M10	PB34B	4	C	-	PB38B	4	C	-
T13	PB35A	4	T	-	PB39A	4	T	-
P14	PB35B	4	C	-	PB39B	4	C	-
R11	PB36A	4	T	VREF2_4	PB40A	4	T	VREF2_4
P12	PB36B	4	C	-	PB40B	4	C	-
T14	PB37A	4	-	-	PB41A	4	-	-
R14	PB38B	4	-	-	PB42B	4	-	-
-	GNDIO4	4	-	-	GNDIO4	4	-	-
P11	PB39A	4	T	DQS	PB43A	4	T	DQS
N12	PB39B	4	C	-	PB43B	4	C	-
T15	PB40A	4	T	-	PB44A	4	T	-
R15	PB40B	4	C	-	PB44B	4	C	-
-	GNDIO4	4	-	-	GNDIO4	4	-	-
-	GNDIO4	4	-	-	GNDIO4	4	-	-
-	GNDIO4	4	-	-	GNDIO4	4	-	-
-	GNDIO3	3	-	-	GNDIO3	3	-	-
-	GNDIO3	3	-	-	GNDIO3	3	-	-
P15	PR38B	3	C	RLM0_PLLC_FB_A	PR42B	3	C	RLM0_PLLC_FB_A
N15	PR38A	3	T	RLM0_PLLT_FB_A	PR42A	3	T	RLM0_PLLT_FB_A

Petitioners
Ex. 1067, p. 4-28

LFXP15 & LFXP20 Logic Signal Connections: 256 fpBGA (Cont.)

	LFXP15				LFXP20			
Ball Number	Ball Function	Bank	Differential	Dual Function	Ball Function	Bank	Differential	Dual Function
P16	PR37B	3	C[3]	-	PR41B	3	C[3]	-
R16	PR37A	3	T[3]	DQS	PR41A	3	T[3]	DQS
M15	PR36B	3	-	-	PR40B	3	-	-
N14	PR35A	3	-	VREF1_3	PR39A	3	-	VREF1_3
-	GNDIO3	3	-	-	GNDIO3	3	-	-
M14	PR33B	3	C	-	PR37B	3	C	-
L13	PR33A	3	T	-	PR37A	3	T	-
L15	PR32B	3	C[3]	-	PR36B	3	C[3]	-
L14	PR32A	3	T[3]	-	PR36A	3	T[3]	-
L12	PR30A	3	-	-	PR34A	3	-	-
M16	PR29B	3	C	RLM0_PLLC_IN_A	PR33B	3	C	RLM0_PLLC_IN_A
N16	PR29A	3	T	RLM0_PLLT_IN_A	PR33A	3	T	RLM0_PLLT_IN_A
-	GNDIO3	3	-	-	GNDIO3	3	-	-
K14	PR28B	3	C[3]	-	PR32B	3	C[3]	-
K15	PR28A	3	T[3]	DQS	PR32A	3	T[3]	DQS
K12	PR27B	3	-	-	PR31B	3	-	-
K13	PR26A	3	-	VREF2_3	PR30A	3	-	VREF2_3
L16	PR25B	3	C[3]	-	PR29B	3	C[3]	-
K16	PR25A	3	T[3]	-	PR29A	3	T[3]	-
-	GNDIO3	3	-	-	GNDIO3	3	-	-
J15	PR23B	3	C[3]	-	PR27B	3	C[3]	-
J14	PR23A	3	T[3]	-	PR27A	3	T[3]	-
J13	GNDP1	-	-	-	GNDP1	-	-	-
J12	VCCP1	-	-	-	VCCP1	-	-	-
-	GNDIO2	2	-	-	GNDIO2	2	-	-
J16	PR21B	2	C	PCLKC2_0	PR21B	2	C	PCLKC2_0
H16	PR21A	2	T	PCLKT2_0	PR21A	2	T	PCLKT2_0
H13	PR20B	2	C[3]	-	PR20B	2	C[3]	-
H12	PR20A	2	T[3]	DQS	PR20A	2	T[3]	DQS
H15	PR19B	2	-	-	PR19B	2	-	-
H14	PR18A	2	-	VREF1_2	PR18A	2	-	VREF1_2
-	GNDIO2	2	-	-	GNDIO2	2	-	-
G15	PR17B	2	C[3]	-	PR17B	2	C[3]	-
G14	PR17A	2	T[3]	-	PR17A	2	T[3]	-
G16	PR16B	2	C	RUM0_PLLC_IN_A	PR16B	2	C	RUM0_PLLC_IN_A
F16	PR16A	2	T	RUM0_PLLT_IN_A	PR16A	2	T	RUM0_PLLT_IN_A
G13	PR15B	2	-	-	PR15B	2	-	-
-	GNDIO2	2	-	-	GNDIO2	2	-	-
G12	PR12B	2	C	-	PR12B	2	C	-
F13	PR12A	2	T	-	PR12A	2	T	-
B16	PR11B	2	C[3]	-	PR11B	2	C[3]	-
C16	PR11A	2	T[3]	DQS	PR11A	2	T[3]	DQS

Petitioners
Ex. 1067, p. 4-29

LFXP15 & LFXP20 Logic Signal Connections: 256 fpBGA (Cont.)

	LFXP15				LFXP20			
Ball Number	Ball Function	Bank	Differential	Dual Function	Ball Function	Bank	Differential	Dual Function
-	GNDIO2	2	-	-	GNDIO2	2	-	-
F15	PR10B	2	-	-	PR10B	2	-	-
E15	PR9A	2	-	VREF2_2	PR9A	2	-	VREF2_2
F14	PR8B	2	C[3]	-	PR8B	2	C[3]	-
E14	PR8A	2	T[3]	-	PR8A	2	T[3]	-
D15	PR7B	2	C	RUM0_PLLC_FB_A	PR7B	2	C	RUM0_PLLC_FB_A
C15	PR7A	2	T	RUM0_PLLT_FB_A	PR7A	2	T	RUM0_PLLT_FB_A
-	GNDIO2	2	-	-	GNDIO2	2	-	-
E16	TDO	-	-	-	TDO	-	-	-
D16	VCCJ	-	-	-	VCCJ	-	-	-
D14	TDI	-	-	-	TDI	-	-	-
C14	TMS	-	-	-	TMS	-	-	-
B14	TCK	-	-	-	TCK	-	-	-
-	GNDIO1	1	-	-	GNDIO1	1	-	-
-	GNDIO1	1	-	-	GNDIO1	1	-	-
-	GNDIO1	1	-	-	GNDIO1	1	-	-
A15	PT40B	1	C	-	PT44B	1	C	-
B15	PT40A	1	T	-	PT44A	1	T	-
D12	PT39B	1	C	VREF1_1	PT43B	1	C	VREF1_1
-	GNDIO1	1	-	-	GNDIO1	1	-	-
C11	PT39A	1	T	DQS	PT43A	1	T	DQS
A14	PT38B	1	-	-	PT42B	1	-	-
B13	PT37A	1	-	-	PT41A	1	-	-
F12	PT36B	1	C	-	PT40B	1	C	-
E11	PT36A	1	T	-	PT40A	1	T	-
A13	PT35B	1	C	-	PT39B	1	C	-
C13	PT35A	1	T	D0	PT39A	1	T	D0
C10	PT34B	1	C	D1	PT38B	1	C	D1
E10	PT34A	1	T	VREF2_1	PT38A	1	T	VREF2_1
A12	PT33B	1	C	-	PT37B	1	C	-
B12	PT33A	1	T	D2	PT37A	1	T	D2
-	GNDIO1	1	-	-	GNDIO1	1	-	-
C12	PT32B	1	C	D3	PT36B	1	C	D3
A11	PT32A	1	T	-	PT36A	1	T	-
B11	PT31B	1	C	-	PT35B	1	C	-
D11	PT31A	1	T	DQS	PT35A	1	T	DQS
B9	PT30B	1	-	-	PT34B	1	-	-
D9	PT29A	1	-	D4	PT33A	1	-	D4
A10	PT28B	1	C	-	PT32B	1	C	-
B10	PT28A	1	T	D5	PT32A	1	T	D5
-	GNDIO1	1	-	-	GNDIO1	1	-	-
D10	PT27B	1	C	D6	PT31B	1	C	D6

Petitioners
Ex. 1067, p. 4-30

LFXP15 & LFXP20 Logic Signal Connections: 256 fpBGA (Cont.)

	LFXP15				LFXP20			
Ball Number	Ball Function	Bank	Differential	Dual Function	Ball Function	Bank	Differential	Dual Function
A9	PT27A	1	T	-	PT31A	1	T	-
C9	PT26B	1	C	D7	PT30B	1	C	D7
C8	PT26A	1	T	-	PT30A	1	T	-
E9	PT25B	0	C	BUSY	PT29B	0	C	BUSY
-	GNDIO0	0	-	-	GNDIO0	0	-	-
B8	PT25A	0	T	CS1N	PT29A	0	T	CS1N
A8	PT24B	0	C	PCLKC0_0	PT28B	0	C	PCLKC0_0
A7	PT24A	0	T	PCLKT0_0	PT28A	0	T	PCLKT0_0
B7	PT23B	0	C	-	PT27B	0	C	-
C7	PT23A	0	T	DQS	PT27A	0	T	DQS
E8	PT22B	0	-	-	PT26B	0	-	-
D8	PT21A	0	-	DOUT	PT25A	0	-	DOUT
A6	PT20B	0	C	-	PT24B	0	C	-
-	GNDIO0	0	-	-	GNDIO0	0	-	-
C6	PT20A	0	T	WRITEN	PT24A	0	T	WRITEN
E7	PT19B	0	C	-	PT23B	0	C	-
D7	PT19A	0	T	VREF1_0	PT23A	0	T	VREF1_0
A5	PT18B	0	C	-	PT22B	0	C	-
B5	PT18A	0	T	DI	PT22A	0	T	DI
A4	PT17B	0	C	-	PT21B	0	C	-
B6	PT17A	0	T	CSN	PT21A	0	T	CSN
E6	PT16B	0	C	-	PT20B	0	C	-
D6	PT16A	0	T	-	PT20A	0	T	-
D5	PT15B	0	C	VREF2_0	PT19B	0	C	VREF2_0
A3	PT15A	0	T	DQS	PT19A	0	T	DQS
B3	PT14B	0	-	-	PT18B	0	-	-
B2	PT13A	0	-	-	PT17A	0	-	-
-	GNDIO0	0	-	-	GNDIO0	0	-	-
A2	PT12B	0	C	-	PT16B	0	C	-
B1	PT12A	0	T	-	PT16A	0	T	-
F5	PT11B	0	C	-	PT15B	0	C	-
C5	PT11A	0	T	-	PT15A	0	T	-
-	GNDIO0	0	-	-	GNDIO0	0	-	-
-	GNDIO0	0	-	-	GNDIO0	0	-	-
-	GNDIO0	0	-	-	GNDIO0	0	-	-
C4	CFG0	0	-	-	CFG0	0	-	-
B4	CFG1	0	-	-	CFG1	0	-	-
C3	DONE	0	-	-	DONE	0	-	-
A1	GND	-	-	-	GND	-	-	-
A16	GND	-	-	-	GND	-	-	-
F11	GND	-	-	-	GND	-	-	-
F6	GND	-	-	-	GND	-	-	-

Petitioners
Ex. 1067, p. 4-31

LFXP15 & LFXP20 Logic Signal Connections: 256 fpBGA (Cont.)

	LFXP15				LFXP20			
Ball Number	Ball Function	Bank	Differential	Dual Function	Ball Function	Bank	Differential	Dual Function
G10	GND	-	-	-	GND	-	-	-
G7	GND	-	-	-	GND	-	-	-
G8	GND	-	-	-	GND	-	-	-
G9	GND	-	-	-	GND	-	-	-
H10	GND	-	-	-	GND	-	-	-
H7	GND	-	-	-	GND	-	-	-
H8	GND	-	-	-	GND	-	-	-
H9	GND	-	-	-	GND	-	-	-
J10	GND	-	-	-	GND	-	-	-
J7	GND	-	-	-	GND	-	-	-
J8	GND	-	-	-	GND	-	-	-
J9	GND	-	-	-	GND	-	-	-
K10	GND	-	-	-	GND	-	-	-
K7	GND	-	-	-	GND	-	-	-
K8	GND	-	-	-	GND	-	-	-
K9	GND	-	-	-	GND	-	-	-
L11	GND	-	-	-	GND	-	-	-
L6	GND	-	-	-	GND	-	-	-
T1	GND	-	-	-	GND	-	-	-
T16	GND	-	-	-	GND	-	-	-
D13	VCC	-	-	-	VCC	-	-	-
D4	VCC	-	-	-	VCC	-	-	-
E12	VCC	-	-	-	VCC	-	-	-
E5	VCC	-	-	-	VCC	-	-	-
M12	VCC	-	-	-	VCC	-	-	-
M5	VCC	-	-	-	VCC	-	-	-
N13	VCC	-	-	-	VCC	-	-	-
N4	VCC	-	-	-	VCC	-	-	-
E13	VCCAUX	-	-	-	VCCAUX	-	-	-
E4	VCCAUX	-	-	-	VCCAUX	-	-	-
M13	VCCAUX	-	-	-	VCCAUX	-	-	-
M4	VCCAUX	-	-	-	VCCAUX	-	-	-
F7	VCCIO0	0	-	-	VCCIO0	0	-	-
F8	VCCIO0	0	-	-	VCCIO0	0	-	-
F10	VCCIO1	1	-	-	VCCIO1	1	-	-
F9	VCCIO1	1	-	-	VCCIO1	1	-	-
G11	VCCIO2	2	-	-	VCCIO2	2	-	-
H11	VCCIO2	2	-	-	VCCIO2	2	-	-
J11	VCCIO3	3	-	-	VCCIO3	3	-	-
K11	VCCIO3	3	-	-	VCCIO3	3	-	-
L10	VCCIO4	4	-	-	VCCIO4	4	-	-
L9	VCCIO4	4	-	-	VCCIO4	4	-	-

Petitioners
Ex. 1067, p. 4-32

LFXP15 & LFXP20 Logic Signal Connections: 256 fpBGA (Cont.)

Ball Number	LFXP15				LFXP20			
	Ball Function	Bank	Differential	Dual Function	Ball Function	Bank	Differential	Dual Function
L7	VCCIO5	5	-	-	VCCIO5	5	-	-
L8	VCCIO5	5	-	-	VCCIO5	5	-	-
J6	VCCIO6	6	-	-	VCCIO6	6	-	-
K6	VCCIO6	6	-	-	VCCIO6	6	-	-
G6	VCCIO7	7	-	-	VCCIO7	7	-	-
H6	VCCIO7	7	-	-	VCCIO7	7	-	-

1. Applies to LFXP “C” only.
2. Applies to LFXP “E” only.
3. Supports dedicated LVDS outputs.

Petitioners
Ex. 1067, p. 4-33

LFXP10, LFXP15 & LFXP20 Logic Signal Connections: 388 fpBGA

	LFXP10				LFXP15				LFXP20			
Ball Number	Ball Function	Bank	Diff.	Dual Function	Ball Function	Bank	Diff.	Dual Function	Ball Function	Bank	Diff.	Dual Function
F4	PROGRAMN	7	-	-	PROGRAMN	7	-	-	PROGRAMN	7	-	-
G4	CCLK	7	-	-	CCLK	7	-	-	CCLK	7	-	-
-	GNDIO7	7	-	-	GNDIO7	7	-	-	GNDIO7	7	-	-
D2	PL2A	7	T[3]	-	PL6A	7	T[3]	-	PL6A	7	T[3]	-
D1	PL2B	7	C[3]	-	PL6B	7	C[3]	-	PL6B	7	C[3]	-
-	GNDIO7	7	-	-	GNDIO7	7	-	-	GNDIO7	7	-	-
E2	PL3A	7	T	LUM0_PLLT_FB_A	PL7A	7	T	LUM0_PLLT_FB_A	PL7A	7	T	LUM0_PLLT_FB_A
E3	PL3B	7	C	LUM0_PLLC_FB_A	PL7B	7	C	LUM0_PLLC_FB_A	PL7B	7	C	LUM0_PLLC_FB_A
F3	PL4A	7	T[3]	-	PL8A	7	T[3]	-	PL8A	7	T[3]	-
F2	PL4B	7	C[3]	-	PL8B	7	C[3]	-	PL8B	7	C[3]	-
H4	PL5A	7	-	-	PL9A	7	-	-	PL9A	7	-	-
H3	PL6B	7	-	VREF1_7	PL10B	7	-	VREF1_7	PL10B	7	-	VREF1_7
G3	PL7A	7	T[3]	DQS	PL11A	7	T[3]	DQS	PL11A	7	T[3]	DQS
G2	PL7B	7	C[3]	-	PL11B	7	C[3]	-	PL11B	7	C[3]	-
-	GNDIO7	7	-	-	GNDIO7	7	-	-	GNDIO7	7	-	-
F1	PL8A	7	T	-	PL12A	7	T	-	PL12A	7	T	-
E1	PL8B	7	C	-	PL12B	7	C	-	PL12B	7	C	-
J4	PL9A	7	T[3]	-	PL13A	7	T[3]	-	PL13A	7	T[3]	-
K4	PL9B	7	C[3]	-	PL13B	7	C[3]	-	PL13B	7	C[3]	-
G1	PL11A	7	T[3]	-	PL15A	7	T[3]	-	PL15A	7	T[3]	-
H2	PL11B	7	C[3]	-	PL15B	7	C[3]	-	PL15B	7	C[3]	-
-	GNDIO7	7	-	-	GNDIO7	7	-	-	GNDIO7	7	-	-
J2	PL12A	7	T	LUM0_PLLT_IN_A	PL16A	7	T	LUM0_PLLT_IN_A	PL16A	7	T	LUM0_PLLT_IN_A
H1	PL12B	7	C	LUM0_PLLC_IN_A	PL16B	7	C	LUM0_PLLC_IN_A	PL16B	7	C	LUM0_PLLC_IN_A
J1	PL13A	7	T[3]	-	PL17A	7	T[3]	-	PL17A	7	T[3]	-
K2	PL13B	7	C[3]	-	PL17B	7	C[3]	-	PL17B	7	C[3]	-
K3	PL14A	7	-	VREF2_7	PL18A	7	-	VREF2_7	PL18A	7	-	VREF2_7
J3	PL15B	7	-	-	PL19B	7	-	-	PL19B	7	-	-
K1	PL16A	7	T[3]	DQS	PL20A	7	T[3]	DQS	PL20A	7	T[3]	DQS
-	GNDIO7	7	-	-	GNDIO7	7	-	-	GNDIO7	7	-	-
L2	PL16B	7	C[3]	-	PL20B	7	C[3]	-	PL20B	7	C[3]	-
L3	PL17A	7	T	-	PL21A	7	T	-	PL21A	7	T	-
L4	PL17B	7	C	-	PL21B	7	C	-	PL21B	7	C	-
L1	PL18A	7	T[3]	-	PL22A	7	T[3]	-	PL22A	7	T[3]	-
M1	PL18B	7	C[3]	-	PL22B	7	C[3]	-	PL22B	7	C[3]	-
M2	VCCP0	-	-	-	VCCP0	-	-	-	VCCP0	-	-	-
N1	GNDP0	-	-	-	GNDP0	-	-	-	GNDP0	-	-	-
M3	PL19A	6	T[3]	-	PL23A	6	T[3]	-	PL27A	6	T[3]	-
M4	PL19B	6	C[3]	-	PL23B	6	C[3]	-	PL27B	6	C[3]	-
P1	PL20A	6	T	PCLKT6_0	PL24A	6	T	PCLKT6_0	PL28A	6	T	PCLKT6_0
-	GNDIO6	6	-	-	GNDIO6	6	-	-	GNDIO6	6	-	-
N2	PL20B	6	C	PCLKC6_0	PL24B	6	C	PCLKC6_0	PL28B	6	C	PCLKC6_0
R1	PL21A	6	T[3]	-	PL25A	6	T[3]	-	PL29A	6	T[3]	-
P2	PL21B	6	C[3]	-	PL25B	6	C[3]	-	PL29B	6	C[3]	-
N3	PL22A	6	-	-	PL26A	6	-	-	PL30A	6	-	-
N4	PL23B	6	-	VREF1_6	PL27B	6	-	VREF1_6	PL31B	6	-	VREF1_6
T1	PL24A	6	T[3]	DQS	PL28A	6	T[3]	DQS	PL32A	6	T[3]	DQS
R2	PL24B	6	C[3]	-	PL28B	6	C[3]	-	PL32B	6	C[3]	-
-	GNDIO6	6	-	-	GNDIO6	6	-	-	GNDIO6	6	-	-

Petitioners
Ex. 1067, p. 4-34

LFXP10, LFXP15 & LFXP20 Logic Signal Connections: 388 fpBGA (Cont.)

	LFXP10				LFXP15				LFXP20			
Ball Number	Ball Function	Bank	Diff.	Dual Function	Ball Function	Bank	Diff.	Dual Function	Ball Function	Bank	Diff.	Dual Function
U1	PL25A	6	T	LLM0_PLLT_IN_A	PL29A	6	T	LLM0_PLLT_IN_A	PL33A	6	T	LLM0_PLLT_IN_A
T2	PL25B	6	C	LLM0_PLLC_IN_A	PL29B	6	C	LLM0_PLLC_IN_A	PL33B	6	C	LLM0_PLLC_IN_A
V1	PL26A	6	T[3]	-	PL30A	6	T[3]	-	PL34A	6	T[3]	-
U2	PL26B	6	C[3]	-	PL30B	6	C[3]	-	PL34B	6	C[3]	-
W1	PL28A	6	T[3]	-	PL32A	6	T[3]	-	PL36A	6	T[3]	-
V2	PL28B	6	C[3]	-	PL32B	6	C[3]	-	PL36B	6	C[3]	-
-	GNDIO6	6	-	-	GNDIO6	-	-	-	GNDIO6	6	-	-
P3	PL29A	6	T	-	PL33A	6	T	-	PL37A	6	T	-
P4	PL29B	6	C	-	PL33B	6	C	-	PL37B	6	C	-
Y1	PL30A	6	T[3]	-	PL34A	6	T[3]	-	PL38A	6	T[3]	-
W2	PL30B	6	C[3]	-	PL34B	6	C[3]	-	PL38B	6	C[3]	-
R3	PL31A	6	-	VREF2_6	PL35A	6	-	VREF2_6	PL39A	6	-	VREF2_6
R4	PL32B	6	-	-	PL36B	6	-	-	PL40B	6	-	-
T3	PL33A	6	T[3]	DQS	PL37A	6	T[3]	DQS	PL41A	6	T[3]	DQS
T4	PL33B	6	C[3]	-	PL37B	6	C[3]	-	PL41B	6	C[3]	-
-	GNDIO6	6	-	-	GNDIO6	6	-	-	GNDIO6	6	-	-
V4	PL34A	6	T	LLM0_PLLT_FB_A	PL38A	6	T	LLM0_PLLT_FB_A	PL42A	6	T	LLM0_PLLT_FB_A
V3	PL34B	6	C	LLM0_PLLC_FB_A	PL38B	6	C	LLM0_PLLC_FB_A	PL42B	6	C	LLM0_PLLC_FB_A
U4	PL35A	6	T[3]	-	PL39A	6	T[3]	-	PL43A	6	T[3]	-
U3	PL35B	6	C[3]	-	PL39B	6	C[3]	-	PL43B	6	C[3]	-
-	GNDIO6	6	-	-	GNDIO6	6	-	-	GNDIO6	6	-	-
W5	SLEEPN[1]/ TOE[2]	5	-	-	SLEEPN[1]/ TOE[2]	5	-	-	SLEEPN[1]/ TOE[2]	5	-	-
Y2	INITN	5	-	-	INITN	5	-	-	INITN	5	-	-
-	GNDIO5	5	-	-	GNDIO5	5	-	-	GNDIO5	5	-	-
-	GNDIO5	5	-	-	GNDIO5	5	-	-	GNDIO5	5	-	-
Y3	-	-	-	-	PB3B	5	-	-	PB7B	5	-	-
W3	-	-	-	-	PB4A	5	T	-	PB8A	5	T	-
W4	-	-	-	-	PB4B	5	C	-	PB8B	5	C	-
AA2	-	-	-	-	PB5A	5	-	-	PB9A	5	-	-
AA1	-	-	-	-	PB6B	5	-	-	PB10B	5	-	-
W6	PB2A	5	-	-	PB7A	5	T	DQS	PB11A	5	T	DQS
W7	-	-	-	-	PB7B	5	C	-	PB11B	5	C	-
Y4	PB3A	5	T	-	PB8A	5	T	-	PB12A	5	T	-
-	GNDIO5	5	-	-	GNDIO5	5	-	-	GNDIO5	5	-	-
Y5	PB3B	5	C	-	PB8B	5	C	-	PB12B	5	C	-
AB2	PB4A	5	T	-	PB9A	5	T	-	PB13A	5	T	-
AA3	PB4B	5	C	-	PB9B	5	C	-	PB13B	5	C	-
AB3	PB5A	5	T	-	PB10A	5	T	-	PB14A	5	T	-
AA4	PB5B	5	C	-	PB10B	5	C	-	PB14B	5	C	-
W8	PB6A	5	T	-	PB11A	5	T	-	PB15A	5	T	-
W9	PB6B	5	C	-	PB11B	5	C	-	PB15B	5	C	-
AB4	PB7A	5	T	VREF1_5	PB12A	5	T	VREF1_5	PB16A	5	T	VREF1_5
-	GNDIO5	5	-	-	GNDIO5	5	-	-	GNDIO5	5	-	-
AA5	PB7B	5	C	-	PB12B	5	C	-	PB16B	5	C	-
AB5	PB8A	5	-	-	PB13A	5	-	-	PB17A	5	-	-
Y6	PB9B	5	-	-	PB14B	5	-	-	PB18B	5	-	-
AA6	PB10A	5	T	DQS	PB15A	5	T	DQS	PB19A	5	T	DQS
AB6	PB10B	5	C	-	PB15B	5	C	-	PB19B	5	C	-
Y9	PB11A	5	T	-	PB16A	5	T	-	PB20A	5	T	-

Petitioners
Ex. 1067, p. 4-35

LFXP10, LFXP15 & LFXP20 Logic Signal Connections: 388 fpBGA (Cont.)

	LFXP10				LFXP15				LFXP20			
Ball Number	Ball Function	Bank	Diff.	Dual Function	Ball Function	Bank	Diff.	Dual Function	Ball Function	Bank	Diff.	Dual Function
Y10	PB11B	5	C	-	PB16B	5	C	-	PB20B	5	C	-
AA7	PB12A	5	T	-	PB17A	5	T	-	PB21A	5	T	-
AB7	PB12B	5	C	VREF2_5	PB17B	5	C	VREF2_5	PB21B	5	C	VREF2_5
Y7	PB13A	5	T	-	PB18A	5	T	-	PB22A	5	T	-
-	GNDIO5	5	-	-	GNDIO5	5	-	-	GNDIO5	5	-	-
AA8	PB13B	5	C	-	PB18B	5	C	-	PB22B	5	C	-
AB8	PB14A	5	T	-	PB19A	5	T	-	PB23A	5	T	-
Y8	PB14B	5	C	-	PB19B	5	C	-	PB23B	5	C	-
AB9	PB15A	5	T	-	PB20A	5	T	-	PB24A	5	T	-
AA9	PB15B	5	C	-	PB20B	5	C	-	PB24B	5	C	-
W10	PB16A	5	-	-	PB21A	5	-	-	PB25A	5	-	-
W11	PB17B	5	-	-	PB22B	5	-	-	PB26B	5	-	-
AB10	PB18A	5	T	DQS	PB23A	5	T	DQS	PB27A	5	T	DQS
AA10	PB18B	5	C	-	PB23B	5	C	-	PB27B	5	C	-
-	GNDIO5	5	-	-	GNDIO5	5	-	-	GNDIO5	5	-	-
AA11	PB19A	5	T	-	PB24A	5	T	-	PB28A	5	T	-
AB11	PB19B	5	C	-	PB24B	5	C	-	PB28B	5	C	-
Y11	PB20A	5	T	-	PB25A	5	T	-	PB29A	5	T	-
Y12	PB20B	5	C	-	PB25B	5	C	-	PB29B	5	C	-
AB12	PB21A	4	T	-	PB26A	4	T	-	PB30A	4	T	-
AA12	PB21B	4	C	-	PB26B	4	C	-	PB30B	4	C	-
AB13	PB22A	4	T	PCLKT4_0	PB27A	4	T	PCLKT4_0	PB31A	4	T	PCLKT4_0
AA13	PB22B	4	C	PCLKC4_0	PB27B	4	C	PCLKC4_0	PB31B	4	C	PCLKC4_0
-	GNDIO4	4	-	-	GNDIO4	4	-	-	GNDIO4	4	-	-
AA14	PB23A	4	T	-	PB28A	4	T	-	PB32A	4	T	-
AB14	PB23B	4	C	-	PB28B	4	C	-	PB32B	4	C	-
W12	PB24A	4	-	-	PB29A	4	-	-	PB33A	4	-	-
W13	PB25B	4	-	-	PB30B	4	-	-	PB34B	4	-	-
AA15	PB26A	4	T	DQS	PB31A	4	T	DQS	PB35A	4	T	DQS
AB15	PB26B	4	C	VREF1_4	PB31B	4	C	VREF1_4	PB35B	4	C	VREF1_4
AA16	PB27A	4	T	-	PB32A	4	T	-	PB36A	4	T	-
AB16	PB27B	4	C	-	PB32B	4	C	-	PB36B	4	C	-
Y17	PB28A	4	T	-	PB33A	4	T	-	PB37A	4	T	-
-	GNDIO4	4	-	-	GNDIO4	4	-	-	GNDIO4	4	-	-
AA17	PB28B	4	C	-	PB33B	4	C	-	PB37B	4	C	-
Y13	PB29A	4	T	-	PB34A	4	T	-	PB38A	4	T	-
Y14	PB29B	4	C	-	PB34B	4	C	-	PB38B	4	C	-
AB17	PB30A	4	T	-	PB35A	4	T	-	PB39A	4	T	-
Y18	PB30B	4	C	-	PB35B	4	C	-	PB39B	4	C	-
AA18	PB31A	4	T	VREF2_4	PB36A	4	T	VREF2_4	PB40A	4	T	VREF2_4
AB18	PB31B	4	C	-	PB36B	4	C	-	PB40B	4	C	-
Y19	PB32A	4	-	-	PB37A	4	-	-	PB41A	4	-	-
AB19	PB33B	4	-	-	PB38B	4	-	-	PB42B	4	-	-
-	GNDIO4	4	-	-	GNDIO4	4	-	-	GNDIO4	4	-	-
AA19	PB34A	4	T	DQS	PB39A	4	T	DQS	PB43A	4	T	DQS
Y20	PB34B	4	C	-	PB39B	4	C	-	PB43B	4	C	-
W14	PB35A	4	T	-	PB40A	4	T	-	PB44A	4	T	-
W15	PB35B	4	C	-	PB40B	4	C	-	PB44B	4	C	-
AB20	PB36A	4	T	-	PB41A	4	T	-	PB45A	4	T	-

Petitioners
Ex. 1067, p. 4-36

LFXP10, LFXP15 & LFXP20 Logic Signal Connections: 388 fpBGA (Cont.)

	LFXP10				LFXP15				LFXP20			
Ball Number	Ball Function	Bank	Diff.	Dual Function	Ball Function	Bank	Diff.	Dual Function	Ball Function	Bank	Diff.	Dual Function
AA20	PB36B	4	C	-	PB41B	4	C	-	PB45B	4	C	-
AB21	PB37A	4	T	-	PB42A	4	T	-	PB46A	4	T	-
AA21	PB37B	4	C	-	PB42B	4	C	-	PB46B	4	C	-
AA22	PB38A	4	T	-	PB43A	4	T	-	PB47A	4	T	-
Y21	PB38B	4	C	-	PB43B	4	C	-	PB47B	4	C	-
-	GNDIO4	4	-	-	GNDIO4	4	-	-	GNDIO4	4	-	-
W16	PB39A	4	-	-	PB44A	4	T	-	PB48A	4	T	-
W17	-	-	-	-	PB44B	4	C	-	PB48B	4	C	-
Y15	-	-	-	-	PB45A	4	-	-	PB49A	4	-	-
Y16	-	-	-	-	PB46B	4	-	-	PB50B	4	-	-
W19	-	-	-	-	PB47A	4	T	DQS	PB51A	4	T	DQS
W18	-	-	-	-	PB47B	4	C	-	PB51B	4	C	-
W20	-	-	-	-	PB48A	4	-	-	PB52A	4	-	-
-	GNDIO4	4	-	-	GNDIO4	4	-	-	GNDIO4	4	-	-
-	GNDIO4	4	-	-	GNDIO4	4	-	-	GNDIO4	4	-	-
-	GNDIO3	3	-	-	GNDIO3	3	-	-	GNDIO3	3	-	-
T20	PR35B	3	C[3]	-	PR39B	3	C[3]	-	PR43B	3	C[3]	-
T19	PR35A	3	T[3]	-	PR39A	3	T[3]	-	PR43A	3	T[3]	-
-	GNDIO3	3	-	-	GNDIO3	3	-	-	GNDIO3	3	-	-
U19	PR34B	3	C	RLM0_PLLC_FB_A	PR38B	3	C	RLM0_PLLC_FB_A	PR42B	3	C	RLM0_PLLC_FB_A
U20	PR34A	3	T	RLM0_PLLT_FB_A	PR38A	3	T	RLM0_PLLT_FB_A	PR42A	3	T	RLM0_PLLT_FB_A
V19	PR33B	3	C[3]	-	PR37B	3	C[3]	-	PR41B	3	C[3]	-
V20	PR33A	3	T[3]	DQS	PR37A	3	T[3]	DQS	PR41A	3	T[3]	DQS
R19	PR32B	3	-	-	PR36B	3	-	-	PR40B	3	-	-
R20	PR31A	3	-	VREF1_3	PR35A	3	-	VREF1_3	PR39A	3	-	VREF1_3
W21	PR30B	3	C[3]	-	PR34B	3	C[3]	-	PR38B	3	C[3]	-
Y22	PR30A	3	T[3]	-	PR34A	3	T[3]	-	PR38A	3	T[3]	-
-	GNDIO3	3	-	-	GNDIO3	3	-	-	GNDIO3	3	-	-
P19	PR29B	3	C	-	PR33B	3	C	-	PR37B	3	C	-
P20	PR29A	3	T	-	PR33A	3	T	-	PR37A	3	T	-
V21	PR28B	3	C[3]	-	PR32B	3	C[3]	-	PR36B	3	C[3]	-
W22	PR28A	3	T[3]	-	PR32A	3	T[3]	-	PR36A	3	T[3]	-
U21	PR26B	3	C[3]	-	PR30B	3	C[3]	-	PR34B	3	C[3]	-
V22	PR26A	3	T[3]	-	PR30A	3	T[3]	-	PR34A	3	T[3]	-
T21	PR25B	3	C	RLM0_PLLC_IN_A	PR29B	3	C	RLM0_PLLC_IN_A	PR33B	3	C	RLM0_PLLC_IN_A
U22	PR25A	3	T	RLM0_PLLT_IN_A	PR29A	3	T	RLM0_PLLT_IN_A	PR33A	3	T	RLM0_PLLT_IN_A
-	GNDIO3	3	-	-	GNDIO3	3	-	-	GNDIO3	3	-	-
R21	PR24B	3	C[3]	-	PR28B	3	C[3]	-	PR32B	3	C[3]	-
T22	PR24A	3	T[3]	DQS	PR28A	3	T[3]	DQS	PR32A	3	T[3]	DQS
N19	PR23B	3	-	-	PR27B	3	-	-	PR31B	3	-	-
N20	PR22A	3	-	VREF2_3	PR26A	3	-	VREF2_3	PR30A	3	-	VREF2_3
R22	PR21B	3	C[3]	-	PR25B	3	C[3]	-	PR29B	3	C[3]	-
P22	PR21A	3	T[3]	-	PR25A	3	T[3]	-	PR29A	3	T[3]	-
P21	PR20B	3	C	-	PR24B	3	C	-	PR28B	3	C	-
N21	PR20A	3	T	-	PR24A	3	T	-	PR28A	3	T	-
-	GNDIO3	3	-	-	GNDIO3	3	-	-	GNDIO3	3	-	-
M20	PR19B	3	C[3]	-	PR23B	3	C[3]	-	PR27B	3	C[3]	-
M19	PR19A	3	T[3]	-	PR23A	3	T[3]	-	PR27A	3	T[3]	-
N22	GNDP1	-	-	-	GNDP1	-	-	-	GNDP1	-	-	-

Petitioners
Ex. 1067, p. 4-37

LFXP10, LFXP15 & LFXP20 Logic Signal Connections: 388 fpBGA (Cont.)

	LFXP10				LFXP15				LFXP20			
Ball Number	Ball Function	Bank	Diff.	Dual Function	Ball Function	Bank	Diff.	Dual Function	Ball Function	Bank	Diff.	Dual Function
M21	VCCP1	-	-	-	VCCP1	-	-	-	VCCP1	-	-	-
-	GNDIO2	2	-	-	GNDIO2	2	-	-	GNDIO2	2	-	-
M22	PR18B	2	C[3]	-	PR22B	2	C[3]	-	PR22B	2	C[3]	-
L22	PR18A	2	T[3]	-	PR22A	2	T[3]	-	PR22A	2	T[3]	-
K22	PR17B	2	C	PCLKC2_0	PR21B	2	C	PCLKC2_0	PR21B	2	C	PCLKC2_0
K21	PR17A	2	T	PCLKT2_0	PR21A	2	T	PCLKT2_0	PR21A	2	T	PCLKT2_0
L19	PR16B	2	C[3]	-	PR20B	2	C[3]	-	PR20B	2	C[3]	-
K20	PR16A	2	T[3]	DQS	PR20A	2	T[3]	DQS	PR20A	2	T[3]	DQS
L20	PR15B	2	-	-	PR19B	2	-	-	PR19B	2	-	-
L21	PR14A	2	-	VREF1_2	PR18A	2	-	VREF1_2	PR18A	2	-	VREF1_2
-	GNDIO2	2	-	-	GNDIO2	2	-	-	GNDIO2	2	-	-
J22	PR13B	2	C[3]	-	PR17B	2	C[3]	-	PR17B	2	C[3]	-
J21	PR13A	2	T[3]	-	PR17A	2	T[3]	-	PR17A	2	T[3]	-
H22	PR12B	2	C	RUM0_PLLC_IN_A	PR16B	2	C	RUM0_PLLC_IN_A	PR16B	2	C	RUM0_PLLC_IN_A
H21	PR12A	2	T	RUM0_PLLT_IN_A	PR16A	2	T	RUM0_PLLT_IN_A	PR16A	2	T	RUM0_PLLT_IN_A
K19	PR11B	2	C[3]	-	PR15B	2	C[3]	-	PR15B	2	C[3]	-
J19	PR11A	2	T[3]	-	PR15A	2	T[3]	-	PR15A	2	T[3]	-
-	GNDIO2	2	-	-	GNDIO2	2	-	-	GNDIO2	2	-	-
J20	PR9B	2	C[3]	-	PR13B	2	C[3]	-	PR13B	2	C[3]	-
H20	PR9A	2	T[3]	-	PR13A	2	T[3]	-	PR13A	2	T[3]	-
H19	PR8B	2	C	-	PR12B	2	C	-	PR12B	2	C	-
G19	PR8A	2	T	-	PR12A	2	T	-	PR12A	2	T	-
G22	PR7B	2	C[3]	-	PR11B	2	C[3]	-	PR11B	2	C[3]	-
G21	PR7A	2	T[3]	DQS	PR11A	2	T[3]	DQS	PR11A	2	T[3]	DQS
-	GNDIO2	2	-	-	GNDIO2	2	-	-	GNDIO2	2	-	-
F20	PR6B	2	-	-	PR10B	2	-	-	PR10B	2	-	-
G20	PR5A	2	-	VREF2_2	PR9A	2	-	VREF2_2	PR9A	2	-	VREF2_2
F22	PR4B	2	C[3]	-	PR8B	2	C[3]	-	PR8B	2	C[3]	-
F21	PR4A	2	T[3]	-	PR8A	2	T[3]	-	PR8A	2	T[3]	-
E22	PR3B	2	C	RUM0_PLLC_FB_A	PR7B	2	C	RUM0_PLLC_FB_A	PR7B	2	C	RUM0_PLLC_FB_A
E21	PR3A	2	T	RUM0_PLLT_FB_A	PR7A	2	T	RUM0_PLLT_FB_A	PR7A	2	T	RUM0_PLLT_FB_A
D22	PR2B	2	C[3]	-	PR6B	2	C[3]	-	PR6B	2	C[3]	-
D21	PR2A	2	T[3]	-	PR6A	2	T[3]	-	PR6A	2	T[3]	-
-	GNDIO2	2	-	-	GNDIO2	2	-	-	GNDIO2	2	-	-
F19	TDO	-	-	-	TDO	-	-	-	TDO	-	-	-
E20	VCCJ	-	-	-	VCCJ	-	-	-	VCCJ	-	-	-
D20	TDI	-	-	-	TDI	-	-	-	TDI	-	-	-
D19	TMS	-	-	-	TMS	-	-	-	TMS	-	-	-
D18	TCK	-	-	-	TCK	-	-	-	TCK	-	-	-
-	GNDIO1	1	-	-	GNDIO1	1	-	-	GNDIO1	1	-	-
E19	-	-	-	-	PT48A	1	-	-	PT52A	1	-	-
D17	-	-	-	-	PT47B	1	C	-	PT51B	1	C	-
D16	-	-	-	-	PT47A	1	T	DQS	PT51A	1	T	DQS
C16	-	-	-	-	PT46B	1	-	-	PT50B	1	-	-
C15	-	-	-	-	PT45A	1	-	-	PT49A	1	-	-
C17	-	-	-	-	PT44B	1	C	-	PT48B	1	C	-
C18	PT39A	1	-	-	PT44A	1	T	-	PT48A	1	T	-
C19	PT38B	1	C	-	PT43B	1	C	-	PT47B	1	C	-
-	GNDIO1	1	-	-	GNDIO1	1	-	-	GNDIO1	1	-	-

Petitioners
Ex. 1067, p. 4-38

LFXP10, LFXP15 & LFXP20 Logic Signal Connections: 388 fpBGA (Cont.)

	LFXP10				LFXP15				LFXP20			
Ball Number	Ball Function	Bank	Diff.	Dual Function	Ball Function	Bank	Diff.	Dual Function	Ball Function	Bank	Diff.	Dual Function
C20	PT38A	1	T	-	PT43A	1	T	-	PT47A	1	T	-
C21	PT37B	1	C	-	PT42B	1	C	-	PT46B	1	C	-
C22	PT37A	1	T	-	PT42A	1	T	-	PT46A	1	T	-
B22	PT36B	1	C	-	PT41B	1	C	-	PT45B	1	C	-
A21	PT36A	1	T	-	PT41A	1	T	-	PT45A	1	T	-
D15	PT35B	1	C	-	PT40B	1	C	-	PT44B	1	C	-
D14	PT35A	1	T	-	PT40A	1	T	-	PT44A	1	T	-
B21	PT34B	1	C	VREF1_1	PT39B	1	C	VREF1_1	PT43B	1	C	VREF1_1
-	GNDIO1	1	-	-	GNDIO1	1	-	-	GNDIO1	1	-	-
A20	PT34A	1	T	DQS	PT39A	1	T	DQS	PT43A	1	T	DQS
B20	PT33B	1	-	-	PT38B	1	-	-	PT42B	1	-	-
A19	PT32A	1	-	-	PT37A	1	-	-	PT41A	1	-	-
B19	PT31B	1	C	-	PT36B	1	C	-	PT40B	1	C	-
A18	PT31A	1	T	-	PT36A	1	T	-	PT40A	1	T	-
C14	PT30B	1	C	-	PT35B	1	C	-	PT39B	1	C	-
C13	PT30A	1	T	D0	PT35A	1	T	D0	PT39A	1	T	D0
B18	PT29B	1	C	D1	PT34B	1	C	D1	PT38B	1	C	D1
A17	PT29A	1	T	VREF2_1	PT34A	1	T	VREF2_1	PT38A	1	T	VREF2_1
B17	PT28B	1	C	-	PT33B	1	C	-	PT37B	1	C	-
A16	PT28A	1	T	D2	PT33A	1	T	D2	PT37A	1	T	D2
-	GNDIO1	1	-	-	GNDIO1	1	-	-	GNDIO1	1	-	-
B16	PT27B	1	C	D3	PT32B	1	C	D3	PT36B	1	C	D3
A15	PT27A	1	T	-	PT32A	1	T	-	PT36A	1	T	-
B15	PT26B	1	C	-	PT31B	1	C	-	PT35B	1	C	-
A14	PT26A	1	T	DQS	PT31A	1	T	DQS	PT35A	1	T	DQS
D13	PT25B	1	-	-	PT30B	1	-	-	PT34B	1	-	-
D12	PT24A	1	-	D4	PT29A	1	-	D4	PT33A	1	-	D4
B14	PT23B	1	C	-	PT28B	1	C	-	PT32B	1	C	-
A13	PT23A	1	T	D5	PT28A	1	T	D5	PT32A	1	T	D5
-	GNDIO1	1	-	-	GNDIO1	1	-	-	GNDIO1	1	-	-
B13	PT22B	1	C	D6	PT27B	1	C	D6	PT31B	1	C	D6
A12	PT22A	1	T	-	PT27A	1	T	-	PT31A	1	T	-
B12	PT21B	1	C	D7	PT26B	1	C	D7	PT30B	1	C	D7
C12	PT21A	1	T	-	PT26A	1	T	-	PT30A	1	T	-
C11	PT20B	0	C	BUSY	PT25B	0	C	BUSY	PT29B	0	C	BUSY
-	GNDIO0	0	-	-	GNDIO0	0	-	-	GNDIO0	0	-	-
B11	PT20A	0	T	CS1N	PT25A	0	T	CS1N	PT29A	0	T	CS1N
A11	PT19B	0	C	PCLKC0_0	PT24B	0	C	PCLKC0_0	PT28B	0	C	PCLKC0_0
A10	PT19A	0	T	PCLKT0_0	PT24A	0	T	PCLKT0_0	PT28A	0	T	PCLKT0_0
B10	PT18B	0	C	-	PT23B	0	C	-	PT27B	0	C	-
B9	PT18A	0	T	DQS	PT23A	0	T	DQS	PT27A	0	T	DQS
D11	PT17B	0	-	-	PT22B	0	-	-	PT26B	0	-	-
D10	PT16A	0	-	DOUT	PT21A	0	-	DOUT	PT25A	0	-	DOUT
A9	PT15B	0	C	-	PT20B	0	C	-	PT24B	0	C	-
-	GNDIO0	0	-	-	GNDIO0	0	-	-	GNDIO0	0	-	-
C8	PT15A	0	T	WRITEN	PT20A	0	T	WRITEN	PT24A	0	T	WRITEN
B8	PT14B	0	C	-	PT19B	0	C	-	PT23B	0	C	-
A8	PT14A	0	T	VREF1_0	PT19A	0	T	VREF1_0	PT23A	0	T	VREF1_0
C7	PT13B	0	C	-	PT18B	0	C	-	PT22B	0	C	-

Petitioners
Ex. 1067, p. 4-39

LFXP10, LFXP15 & LFXP20 Logic Signal Connections: 388 fpBGA (Cont.)

	LFXP10				LFXP15				LFXP20			
Ball Number	Ball Function	Bank	Diff.	Dual Function	Ball Function	Bank	Diff.	Dual Function	Ball Function	Bank	Diff.	Dual Function
A7	PT13A	0	T	DI	PT18A	0	T	DI	PT22A	0	T	DI
B7	PT12B	0	C	-	PT17B	0	C	-	PT21B	0	C	-
C6	PT12A	0	T	CSN	PT17A	0	T	CSN	PT21A	0	T	CSN
C10	PT11B	0	C	-	PT16B	0	C	-	PT20B	0	C	-
C9	PT11A	0	T	-	PT16A	0	T	-	PT20A	0	T	-
A6	PT10B	0	C	VREF2_0	PT15B	0	C	VREF2_0	PT19B	0	C	VREF2_0
B6	PT10A	0	T	DQS	PT15A	0	T	DQS	PT19A	0	T	DQS
A5	PT9B	0	-	-	PT14B	0	-	-	PT18B	0	-	-
B5	PT8A	0	-	-	PT13A	0	-	-	PT17A	0	-	-
-	GNDIO0	0	-	-	GNDIO0	0	-	-	GNDIO0	0	-	-
C5	PT7B	0	C	-	PT12B	0	C	-	PT16B	0	C	-
A4	PT7A	0	T	-	PT12A	0	T	-	PT16A	0	T	-
D9	PT6B	0	C	-	PT11B	0	C	-	PT15B	0	C	-
D8	PT6A	0	T	-	PT11A	0	T	-	PT15A	0	T	-
B4	PT5B	0	C	-	PT10B	0	C	-	PT14B	0	C	-
A2	PT5A	0	T	-	PT10A	0	T	-	PT14A	0	T	-
A3	PT4B	0	C	-	PT9B	0	C	-	PT13B	0	C	-
B3	PT4A	0	T	-	PT9A	0	T	-	PT13A	0	T	-
C4	PT3B	0	C	-	PT8B	0	C	-	PT12B	0	C	-
C3	PT3A	0	T	-	PT8A	0	T	-	PT12A	0	T	-
-	GNDIO0	0	-	-	GNDIO0	0	-	-	GNDIO0	0	-	-
C2	-	-	-	-	PT7B	0	C	-	PT11B	0	C	-
D3	PT2A	0	-	-	PT7A	0	T	DQS	PT11A	0	T	DQS
D7	-	-	-	-	PT6B	0	-	-	PT10B	0	-	-
D6	-	-	-	-	PT5A	0	-	-	PT9A	0	-	-
E4	-	-	-	-	PT4B	0	C	-	PT8B	0	C	-
D4	-	-	-	-	PT4A	0	T	-	PT8A	0	T	-
D5	-	-	-	-	PT3B	0	-	-	PT7B	0	-	-
-	GNDIO0	0	-	-	GNDIO0	0	-	-	GNDIO0	0	-	-
-	GNDIO0	0	-	-	GNDIO0	0	-	-	GNDIO0	0	-	-
C1	CFG0	0	-	-	CFG0	0	-	-	CFG0	0	-	-
B2	CFG1	0	-	-	CFG1	0	-	-	CFG1	0	-	-
B1	DONE	0	-	-	DONE	0	-	-	DONE	0	-	-
A1	GND	-	-	-	GND	-	-	-	GND	-	-	-
A22	GND	-	-	-	GND	-	-	-	GND	-	-	-
AB1	GND	-	-	-	GND	-	-	-	GND	-	-	-
AB22	GND	-	-	-	GND	-	-	-	GND	-	-	-
H10	GND	-	-	-	GND	-	-	-	GND	-	-	-
H11	GND	-	-	-	GND	-	-	-	GND	-	-	-
H12	GND	-	-	-	GND	-	-	-	GND	-	-	-
H13	GND	-	-	-	GND	-	-	-	GND	-	-	-
H14	GND	-	-	-	GND	-	-	-	GND	-	-	-
J10	GND	-	-	-	GND	-	-	-	GND	-	-	-
J11	GND	-	-	-	GND	-	-	-	GND	-	-	-
J12	GND	-	-	-	GND	-	-	-	GND	-	-	-
J13	GND	-	-	-	GND	-	-	-	GND	-	-	-
J14	GND	-	-	-	GND	-	-	-	GND	-	-	-
J9	GND	-	-	-	GND	-	-	-	GND	-	-	-
K10	GND	-	-	-	GND	-	-	-	GND	-	-	-

Petitioners
Ex. 1067, p. 4-40

LFXP10, LFXP15 & LFXP20 Logic Signal Connections: 388 fpBGA (Cont.)

	LFXP10				LFXP15				LFXP20			
Ball Number	Ball Function	Bank	Diff.	Dual Function	Ball Function	Bank	Diff.	Dual Function	Ball Function	Bank	Diff.	Dual Function
K11	GND	-	-	-	GND	-	-	-	GND	-	-	-
K12	GND	-	-	-	GND	-	-	-	GND	-	-	-
K13	GND	-	-	-	GND	-	-	-	GND	-	-	-
K14	GND	-	-	-	GND	-	-	-	GND	-	-	-
K9	GND	-	-	-	GND	-	-	-	GND	-	-	-
L10	GND	-	-	-	GND	-	-	-	GND	-	-	-
L11	GND	-	-	-	GND	-	-	-	GND	-	-	-
L12	GND	-	-	-	GND	-	-	-	GND	-	-	-
L13	GND	-	-	-	GND	-	-	-	GND	-	-	-
L14	GND	-	-	-	GND	-	-	-	GND	-	-	-
L9	GND	-	-	-	GND	-	-	-	GND	-	-	-
M10	GND	-	-	-	GND	-	-	-	GND	-	-	-
M11	GND	-	-	-	GND	-	-	-	GND	-	-	-
M12	GND	-	-	-	GND	-	-	-	GND	-	-	-
M13	GND	-	-	-	GND	-	-	-	GND	-	-	-
M14	GND	-	-	-	GND	-	-	-	GND	-	-	-
M9	GND	-	-	-	GND	-	-	-	GND	-	-	-
N10	GND	-	-	-	GND	-	-	-	GND	-	-	-
N11	GND	-	-	-	GND	-	-	-	GND	-	-	-
N12	GND	-	-	-	GND	-	-	-	GND	-	-	-
N13	GND	-	-	-	GND	-	-	-	GND	-	-	-
N14	GND	-	-	-	GND	-	-	-	GND	-	-	-
N9	GND	-	-	-	GND	-	-	-	GND	-	-	-
P10	GND	-	-	-	GND	-	-	-	GND	-	-	-
P11	GND	-	-	-	GND	-	-	-	GND	-	-	-
P12	GND	-	-	-	GND	-	-	-	GND	-	-	-
P13	GND	-	-	-	GND	-	-	-	GND	-	-	-
P14	GND	-	-	-	GND	-	-	-	GND	-	-	-
P9	GND	-	-	-	GND	-	-	-	GND	-	-	-
R10	GND	-	-	-	GND	-	-	-	GND	-	-	-
R11	GND	-	-	-	GND	-	-	-	GND	-	-	-
R12	GND	-	-	-	GND	-	-	-	GND	-	-	-
R13	GND	-	-	-	GND	-	-	-	GND	-	-	-
R14	GND	-	-	-	GND	-	-	-	GND	-	-	-
H9	VCC	-	-	-	VCC	-	-	-	VCC	-	-	-
J15	VCC	-	-	-	VCC	-	-	-	VCC	-	-	-
J8	VCC	-	-	-	VCC	-	-	-	VCC	-	-	-
K15	VCC	-	-	-	VCC	-	-	-	VCC	-	-	-
K8	VCC	-	-	-	VCC	-	-	-	VCC	-	-	-
L15	VCC	-	-	-	VCC	-	-	-	VCC	-	-	-
L8	VCC	-	-	-	VCC	-	-	-	VCC	-	-	-
M15	VCC	-	-	-	VCC	-	-	-	VCC	-	-	-
M8	VCC	-	-	-	VCC	-	-	-	VCC	-	-	-
N15	VCC	-	-	-	VCC	-	-	-	VCC	-	-	-
N8	VCC	-	-	-	VCC	-	-	-	VCC	-	-	-
P15	VCC	-	-	-	VCC	-	-	-	VCC	-	-	-
P8	VCC	-	-	-	VCC	-	-	-	VCC	-	-	-
R9	VCC	-	-	-	VCC	-	-	-	VCC	-	-	-
G16	VCCAUX	-	-	-	VCCAUX	-	-	-	VCCAUX	-	-	-

Petitioners
Ex. 1067, p. 4-41

LFXP10, LFXP15 & LFXP20 Logic Signal Connections: 388 fpBGA (Cont.)

	LFXP10				LFXP15				LFXP20			
Ball Number	Ball Function	Bank	Diff.	Dual Function	Ball Function	Bank	Diff.	Dual Function	Ball Function	Bank	Diff.	Dual Function
G7	VCCAUX	-	-	-	VCCAUX	-	-	-	VCCAUX	-	-	-
T16	VCCAUX	-	-	-	VCCAUX	-	-	-	VCCAUX	-	-	-
T7	VCCAUX	-	-	-	VCCAUX	-	-	-	VCCAUX	-	-	-
G10	VCCIO0	0	-	-	VCCIO0	0	-	-	VCCIO0	0	-	-
G11	VCCIO0	0	-	-	VCCIO0	0	-	-	VCCIO0	0	-	-
G8	VCCIO0	0	-	-	VCCIO0	0	-	-	VCCIO0	0	-	-
G9	VCCIO0	0	-	-	VCCIO0	0	-	-	VCCIO0	0	-	-
H8	VCCIO0	0	-	-	VCCIO0	0	-	-	VCCIO0	0	-	-
G12	VCCIO1	1	-	-	VCCIO1	1	-	-	VCCIO1	1	-	-
G13	VCCIO1	1	-	-	VCCIO1	1	-	-	VCCIO1	1	-	-
G14	VCCIO1	1	-	-	VCCIO1	1	-	-	VCCIO1	1	-	-
G15	VCCIO1	1	-	-	VCCIO1	1	-	-	VCCIO1	1	-	-
H15	VCCIO1	1	-	-	VCCIO1	1	-	-	VCCIO1	1	-	-
H16	VCCIO2	2	-	-	VCCIO2	2	-	-	VCCIO2	2	-	-
J16	VCCIO2	2	-	-	VCCIO2	2	-	-	VCCIO2	2	-	-
K16	VCCIO2	2	-	-	VCCIO2	2	-	-	VCCIO2	2	-	-
L16	VCCIO2	2	-	-	VCCIO2	2	-	-	VCCIO2	2	-	-
M16	VCCIO3	3	-	-	VCCIO3	3	-	-	VCCIO3	3	-	-
N16	VCCIO3	3	-	-	VCCIO3	3	-	-	VCCIO3	3	-	-
P16	VCCIO3	3	-	-	VCCIO3	3	-	-	VCCIO3	3	-	-
R16	VCCIO3	3	-	-	VCCIO3	3	-	-	VCCIO3	3	-	-
R15	VCCIO4	4	-	-	VCCIO4	4	-	-	VCCIO4	4	-	-
T12	VCCIO4	4	-	-	VCCIO4	4	-	-	VCCIO4	4	-	-
T13	VCCIO4	4	-	-	VCCIO4	4	-	-	VCCIO4	4	-	-
T14	VCCIO4	4	-	-	VCCIO4	4	-	-	VCCIO4	4	-	-
T15	VCCIO4	4	-	-	VCCIO4	4	-	-	VCCIO4	4	-	-
R8	VCCIO5	5	-	-	VCCIO5	5	-	-	VCCIO5	5	-	-
T10	VCCIO5	5	-	-	VCCIO5	5	-	-	VCCIO5	5	-	-
T11	VCCIO5	5	-	-	VCCIO5	5	-	-	VCCIO5	5	-	-
T8	VCCIO5	5	-	-	VCCIO5	5	-	-	VCCIO5	5	-	-
T9	VCCIO5	5	-	-	VCCIO5	5	-	-	VCCIO5	5	-	-
M7	VCCIO6	6	-	-	VCCIO6	6	-	-	VCCIO6	6	-	-
N7	VCCIO6	6	-	-	VCCIO6	6	-	-	VCCIO6	6	-	-
P7	VCCIO6	6	-	-	VCCIO6	6	-	-	VCCIO6	6	-	-
R7	VCCIO6	6	-	-	VCCIO6	6	-	-	VCCIO6	6	-	-
H7	VCCIO7	7	-	-	VCCIO7	7	-	-	VCCIO7	7	-	-
J7	VCCIO7	7	-	-	VCCIO7	7	-	-	VCCIO7	7	-	-
K7	VCCIO7	7	-	-	VCCIO7	7	-	-	VCCIO7	7	-	-
L7	VCCIO7	7	-	-	VCCIO7	7	-	-	VCCIO7	7	-	-

1. Applies to LFXP “C” only.
2. Applies to LFXP “E” only.
3. Supports dedicated LVDS outputs.

Petitioners
Ex. 1067, p. 4-42

LFXP15 & LFXP20 Logic Signal Connections: 484 fpBGA

	LFXP15				LFXP20			
Ball Number	Ball Function	Bank	Differential	Dual Function	Ball Function	Bank	Differential	Dual Function
F5	PROGRAMN	7	-	-	PROGRAMN	7	-	-
E3	CCLK	7	-	-	CCLK	7	-	-
C1	PL2B	7	-	-	PL2B	7	-	-
-	GNDIO7	7	-	-	GNDIO7	7	-	-
G5	PL3A	7	T[3]	-	PL3A	7	T[3]	-
G6	PL3B	7	C[3]	-	PL3B	7	C[3]	-
F4	PL4A	7	T	-	PL4A	7	T	-
F3	PL4B	7	C	-	PL4B	7	C	-
G4	PL5A	7	T[3]	-	PL5A	7	T[3]	-
G3	PL5B	7	C[3]	-	PL5B	7	C[3]	-
D1	PL6A	7	T[3]	-	PL6A	7	T[3]	-
D2	PL6B	7	C[3]	-	PL6B	7	C[3]	-
-	GNDIO7	7	-	-	GNDIO7	7	-	-
E1	PL7A	7	T	LUM0_PLLT_FB_A	PL7A	7	T	LUM0_PLLT_FB_A
E2	PL7B	7	C	LUM0_PLLC_FB_A	PL7B	7	C	LUM0_PLLC_FB_A
H5	PL8A	7	T[3]	-	PL8A	7	T[3]	-
H6	PL8B	7	C[3]	-	PL8B	7	C[3]	-
H4	PL9A	7	-	-	PL9A	7	-	-
H3	PL10B	7	-	VREF1_7	PL10B	7	-	VREF1_7
F1	PL11A	7	T[3]	DQS	PL11A	7	T[3]	DQS
F2	PL11B	7	C[3]	-	PL11B	7	C[3]	-
-	GNDIO7	7	-	-	GNDIO7	7	-	-
J5	PL12A	7	T	-	PL12A	7	T	-
J6	PL12B	7	C	-	PL12B	7	C	-
G1	PL13A	7	T[3]	-	PL13A	7	T[3]	-
G2	PL13B	7	C[3]	-	PL13B	7	C[3]	-
J4	PL15A	7	T[3]	-	PL15A	7	T[3]	-
J3	PL15B	7	C[3]	-	PL15B	7	C[3]	-
-	GNDIO7	7	-	-	GNDIO7	7	-	-
H1	PL16A	7	T	LUM0_PLLT_IN_A	PL16A	7	T	LUM0_PLLT_IN_A
H2	PL16B	7	C	LUM0_PLLC_IN_A	PL16B	7	C	LUM0_PLLC_IN_A
J1	PL17A	7	T[3]	-	PL17A	7	T[3]	-
J2	PL17B	7	C[3]	-	PL17B	7	C[3]	-
K3	PL18A	7	-	VREF2_7	PL18A	7	-	VREF2_7
K2	PL19B	7	-	-	PL19B	7	-	-
K4	PL20A	7	T[3]	DQS	PL20A	7	T[3]	DQS
-	GNDIO7	7	-	-	GNDIO7	7	-	-
K5	PL20B	7	C[3]	-	PL20B	7	C[3]	-
K1	PL21A	7	T	-	PL21A	7	T	-
L2	PL21B	7	C	-	PL21B	7	C	-
L4	PL22A	7	T[3]	-	PL22A	7	T[3]	-
L3	PL22B	7	C[3]	-	PL22B	7	C[3]	-

Petitioners
Ex. 1067, p. 4-43

LFXP15 & LFXP20 Logic Signal Connections: 484 fpBGA (Cont.)

	LFXP15				LFXP20			
Ball Number	Ball Function	Bank	Differential	Dual Function	Ball Function	Bank	Differential	Dual Function
L1	-	-	-	-	PL23A	7	T[3]	-
M1	-	-	-	-	PL23B	7	C[3]	-
M2	-	-	-	-	PL24A	7	-	-
L5	VCCP0	-	-	-	VCCP0	-	-	-
N2	GNDP0	-	-	-	GNDP0	-	-	-
N1	-	-	-	-	PL25B	6	-	-
P2	-	-	-	-	PL26A	6	T[3]	-
P1	-	-	-	-	PL26B	6	C[3]	-
M4	PL23A	6	T[3]	-	PL27A	6	T[3]	-
M3	PL23B	6	C[3]	-	PL27B	6	C[3]	-
R2	PL24A	6	T	PCLKT6_0	PL28A	6	T	PCLKT6_0
-	GNDIO6	6	-	-	GNDIO6	6	-	-
R1	PL24B	6	C	PCLKC6_0	PL28B	6	C	PCLKC6_0
N3	PL25A	6	T[3]	-	PL29A	6	T[3]	-
N4	PL25B	6	C[3]	-	PL29B	6	C[3]	-
M5	PL26A	6	-	-	PL30A	6	-	-
N5	PL27B	6	-	VREF1_6	PL31B	6	-	VREF1_6
T2	PL28A	6	T[3]	DQS	PL32A	6	T[3]	DQS
T1	PL28B	6	C[3]	-	PL32B	6	C[3]	-
-	GNDIO6	6	-	-	GNDIO6	6	-	-
U2	PL29A	6	T	LLM0_PLLT_IN_A	PL33A	6	T	LLM0_PLLT_IN_A
U1	PL29B	6	C	LLM0_PLLC_IN_A	PL33B	6	C	LLM0_PLLC_IN_A
P3	PL30A	6	T[3]	-	PL34A	6	T[3]	-
P4	PL30B	6	C[3]	-	PL34B	6	C[3]	-
P6	PL32A	6	T[3]	-	PL36A	6	T[3]	-
P5	PL32B	6	C[3]	-	PL36B	6	C[3]	-
-	GNDIO6	6	-	-	GNDIO6	6	-	-
V2	PL33A	6	T	-	PL37A	6	T	-
V1	PL33B	6	C	-	PL37B	6	C	-
W2	PL34A	6	T[3]	-	PL38A	6	T[3]	-
W1	PL34B	6	C[3]	-	PL38B	6	C[3]	-
R3	PL35A	6	-	VREF2_6	PL39A	6	-	VREF2_6
R4	PL36B	6	-	-	PL40B	6	-	-
R6	PL37A	6	T[3]	DQS	PL41A	6	T[3]	DQS
R5	PL37B	6	C[3]	-	PL41B	6	C[3]	-
-	GNDIO6	6	-	-	GNDIO6	6	-	-
Y2	PL38A	6	T	LLM0_PLLT_FB_A	PL42A	6	T	LLM0_PLLT_FB_A
Y1	PL38B	6	C	LLM0_PLLC_FB_A	PL42B	6	C	LLM0_PLLC_FB_A
T3	PL39A	6	T[3]	-	PL43A	6	T[3]	-
T4	PL39B	6	C[3]	-	PL43B	6	C[3]	-
W3	PL40A	6	T[3]	-	PL44A	6	T[3]	-
V3	PL40B	6	C[3]	-	PL44B	6	C[3]	-

Petitioners
Ex. 1067, p. 4-44

LFXP15 & LFXP20 Logic Signal Connections: 484 fpBGA (Cont.)

	LFXP15				LFXP20			
Ball Number	Ball Function	Bank	Differential	Dual Function	Ball Function	Bank	Differential	Dual Function
T6	PL41A	6	T	-	PL45A	6	T	-
T5	PL41B	6	C	-	PL45B	6	C	-
-	GNDIO6	6	-	-	GNDIO6	6	-	-
U3	PL42A	6	T[3]	-	PL46A	6	T[3]	-
U4	PL42B	6	C[3]	-	PL46B	6	C[3]	-
V4	PL43A	6	-	-	PL47A	6	-	-
W4	SLEEPN[1]/ TOE[2]	5	-	-	SLEEPN[1]/ TOE[2]	5	-	-
W5	INITN	5	-	-	INITN	5	-	-
Y3	-	-	-	-	PB3B	5	-	-
-	GNDIO5	5	-	-	GNDIO5	5	-	-
U5	-	-	-	-	PB4A	5	T	-
V5	-	-	-	-	PB4B	5	C	-
Y4	-	-	-	-	PB5A	5	T	-
Y5	-	-	-	-	PB5B	5	C	-
V6	-	-	-	-	PB6A	5	T	-
-	GNDIO5	5	-	-	GNDIO5	5	-	-
U6	-	-	-	-	PB6B	5	C	-
W6	PB3A	5	T	-	PB7A	5	T	-
Y6	PB3B	5	C	-	PB7B	5	C	-
AA2	PB4A	5	T	-	PB8A	5	T	-
AA3	PB4B	5	C	-	PB8B	5	C	-
V7	PB5A	5	-	-	PB9A	5	-	-
U7	PB6B	5	-	-	PB10B	5	-	-
Y7	PB7A	5	T	DQS	PB11A	5	T	DQS
W7	PB7B	5	C	-	PB11B	5	C	-
AA4	PB8A	5	T	-	PB12A	5	T	-
-	GNDIO5	5	-	-	GNDIO5	5	-	-
AA5	PB8B	5	C	-	PB12B	5	C	-
AB3	PB9A	5	T	-	PB13A	5	T	-
AB4	PB9B	5	C	-	PB13B	5	C	-
AA6	PB10A	5	T	-	PB14A	5	T	-
AA7	PB10B	5	C	-	PB14B	5	C	-
U8	PB11A	5	T	-	PB15A	5	T	-
V8	PB11B	5	C	-	PB15B	5	C	-
Y8	PB12A	5	T	VREF1_5	PB16A	5	T	VREF1_5
-	GNDIO5	5	-	-	GNDIO5	5	-	-
W8	PB12B	5	C	-	PB16B	5	C	-
V9	PB13A	5	-	-	PB17A	5	-	-
U9	PB14B	5	-	-	PB18B	5	-	-
Y9	PB15A	5	T	DQS	PB19A	5	T	DQS
W9	PB15B	5	C	-	PB19B	5	C	-

Petitioners
Ex. 1067, p. 4-45

LFXP15 & LFXP20 Logic Signal Connections: 484 fpBGA (Cont.)

	LFXP15				LFXP20			
Ball Number	Ball Function	Bank	Differential	Dual Function	Ball Function	Bank	Differential	Dual Function
AB5	PB16A	5	T	-	PB20A	5	T	-
AB6	PB16B	5	C	-	PB20B	5	C	-
AA8	PB17A	5	T	-	PB21A	5	T	-
AA9	PB17B	5	C	VREF2_5	PB21B	5	C	VREF2_5
W10	PB18A	5	T	-	PB22A	5	T	-
-	GNDIO5	5	-	-	GNDIO5	5	-	-
V10	PB18B	5	C	-	PB22B	5	C	-
AB7	PB19A	5	T	-	PB23A	5	T	-
AB8	PB19B	5	C	-	PB23B	5	C	-
AB9	PB20A	5	T	-	PB24A	5	T	-
AB10	PB20B	5	C	-	PB24B	5	C	-
Y10	PB21A	5	-	-	PB25A	5	-	-
AA10	PB22B	5	-	-	PB26B	5	-	-
W11	PB23A	5	T	DQS	PB27A	5	T	DQS
V11	PB23B	5	C	-	PB27B	5	C	-
-	GNDIO5	5	-	-	GNDIO5	5	-	-
Y11	PB24A	5	T	-	PB28A	5	T	-
AA11	PB24B	5	C	-	PB28B	5	C	-
AB11	PB25A	5	T	-	PB29A	5	T	-
AB12	PB25B	5	C	-	PB29B	5	C	-
Y12	PB26A	4	T	-	PB30A	4	T	-
AA12	PB26B	4	C	-	PB30B	4	C	-
W12	PB27A	4	T	PCLKT4_0	PB31A	4	T	PCLKT4_0
V12	PB27B	4	C	PCLKC4_0	PB31B	4	C	PCLKC4_0
-	GNDIO4	4	-	-	GNDIO4	4	-	-
AB13	PB28A	4	T	-	PB32A	4	T	-
AB14	PB28B	4	C	-	PB32B	4	C	-
AA13	PB29A	4	-	-	PB33A	4	-	-
Y13	PB30B	4	-	-	PB34B	4	-	-
AB15	PB31A	4	T	DQS	PB35A	4	T	DQS
AB16	PB31B	4	C	VREF1_4	PB35B	4	C	VREF1_4
V13	PB32A	4	T	-	PB36A	4	T	-
W13	PB32B	4	C	-	PB36B	4	C	-
AA14	PB33A	4	T	-	PB37A	4	T	-
-	GNDIO4	4	-	-	GNDIO4	4	-	-
AA15	PB33B	4	C	-	PB37B	4	C	-
AB17	PB34A	4	T	-	PB38A	4	T	-
AB18	PB34B	4	C	-	PB38B	4	C	-
W14	PB35A	4	T	-	PB39A	4	T	-
Y14	PB35B	4	C	-	PB39B	4	C	-
U14	PB36A	4	T	VREF2_4	PB40A	4	T	VREF2_4
V14	PB36B	4	C	-	PB40B	4	C	-

Petitioners
Ex. 1067, p. 4-46

LFXP15 & LFXP20 Logic Signal Connections: 484 fpBGA (Cont.)

	LFXP15				LFXP20			
Ball Number	Ball Function	Bank	Differential	Dual Function	Ball Function	Bank	Differential	Dual Function
AB19	PB37A	4	-	-	PB41A	4	-	-
AB20	PB38B	4	-	-	PB42B	4	-	-
-	GNDIO4	4	-	-	GNDIO4	4	-	-
V15	PB39A	4	T	DQS	PB43A	4	T	DQS
U15	PB39B	4	C	-	PB43B	4	C	-
Y15	PB40A	4	T	-	PB44A	4	T	-
W15	PB40B	4	C	-	PB44B	4	C	-
AA16	PB41A	4	T	-	PB45A	4	T	-
AA17	PB41B	4	C	-	PB45B	4	C	-
AA18	PB42A	4	T	-	PB46A	4	T	-
AA19	PB42B	4	C	-	PB46B	4	C	-
Y16	PB43A	4	T	-	PB47A	4	T	-
W16	PB43B	4	C	-	PB47B	4	C	-
-	GNDIO4	4	-	-	GNDIO4	4	-	-
AA20	PB44A	4	T	-	PB48A	4	T	-
AA21	PB44B	4	C	-	PB48B	4	C	-
Y17	PB45A	4	-	-	PB49A	4	-	-
Y18	PB46B	4	-	-	PB50B	4	-	-
Y19	PB47A	4	T	DQS	PB51A	4	T	DQS
Y20	PB47B	4	C	-	PB51B	4	C	-
V16	PB48A	4	T	-	PB52A	4	T	-
U16	PB48B	4	C	-	PB52B	4	C	-
-	GNDIO4	4	-	-	GNDIO4	4	-	-
U18	-	-	-	-	PB53A	4	T	-
V18	-	-	-	-	PB53B	4	C	-
W19	-	-	-	-	PB54A	4	T	-
W18	-	-	-	-	PB54B	4	C	-
U17	-	-	-	-	PB55A	4	T	-
V17	-	-	-	-	PB55B	4	C	-
-	GNDIO4	4	-	-	GNDIO4	4	-	-
W17	-	-	-	-	PB56A	4	-	-
-	GNDIO3	3	-	-	GNDIO3	3	-	-
V19	PR43A	3	-	-	PR47A	3	-	-
U20	PR42B	3	C[3]	-	PR46B	3	C[3]	-
U19	PR42A	3	T[3]	-	PR46A	3	T[3]	-
V20	PR41B	3	C	-	PR45B	3	C	-
W20	PR41A	3	T	-	PR45A	3	T	-
T17	PR40B	3	C[3]	-	PR44B	3	C[3]	-
T18	PR40A	3	T[3]	-	PR44A	3	T[3]	-
T19	PR39B	3	C[3]	-	PR43B	3	C[3]	-
T20	PR39A	3	T[3]	-	PR43A	3	T[3]	-
-	GNDIO3	3	-	-	GNDIO3	3	-	-

Petitioners
Ex. 1067, p. 4-47

LFXP15 & LFXP20 Logic Signal Connections: 484 fpBGA (Cont.)

	LFXP15				LFXP20			
Ball Number	Ball Function	Bank	Differential	Dual Function	Ball Function	Bank	Differential	Dual Function
R18	PR38B	3	C	RLM0_PLLC_FB_A	PR42B	3	C	RLM0_PLLC_FB_A
R17	PR38A	3	T	RLM0_PLLT_FB_A	PR42A	3	T	RLM0_PLLT_FB_A
Y22	PR37B	3	C[3]	-	PR41B	3	C[3]	-
Y21	PR37A	3	T[3]	DQS	PR41A	3	T[3]	DQS
W22	PR36B	3	-	-	PR40B	3	-	-
W21	PR35A	3	-	VREF1_3	PR39A	3	-	VREF1_3
P17	PR34B	3	C[3]	-	PR38B	3	C[3]	-
P18	PR34A	3	T[3]	-	PR38A	3	T[3]	-
-	GNDIO3	3	-	-	GNDIO3	3	-	-
R19	PR33B	3	C	-	PR37B	3	C	-
R20	PR33A	3	T	-	PR37A	3	T	-
V22	PR32B	3	C[3]	-	PR36B	3	C[3]	-
V21	PR32A	3	T[3]	-	PR36A	3	T[3]	-
U22	PR30B	3	C[3]	-	PR34B	3	C[3]	-
U21	PR30A	3	T[3]	-	PR34A	3	T[3]	-
P19	PR29B	3	C	RLM0_PLLC_IN_A	PR33B	3	C	RLM0_PLLC_IN_A
P20	PR29A	3	T	RLM0_PLLT_IN_A	PR33A	3	T	RLM0_PLLT_IN_A
-	GNDIO3	3	-	-	GNDIO3	3	-	-
T22	PR28B	3	C[3]	-	PR32B	3	C[3]	-
T21	PR28A	3	T[3]	DQS	PR32A	3	T[3]	DQS
R22	PR27B	3	-	-	PR31B	3	-	-
R21	PR26A	3	-	VREF2_3	PR30A	3	-	VREF2_3
N19	PR25B	3	C[3]	-	PR29B	3	C[3]	-
N20	PR25A	3	T[3]	-	PR29A	3	T[3]	-
N18	PR24B	3	C	-	PR28B	3	C	-
M18	PR24A	3	T	-	PR28A	3	T	-
-	GNDIO3	3	-	-	GNDIO3	3	-	-
P22	PR23B	3	C[3]	-	PR27B	3	C[3]	-
P21	PR23A	3	T[3]	-	PR27A	3	T[3]	-
N22	-	-	-	-	PR26B	3	C[3]	-
N21	-	-	-	-	PR26A	3	T[3]	-
M19	-	-	-	-	PR25B	3	-	-
M20	GNDP1	-	-	-	GNDP1	-	-	-
L18	VCCP1	-	-	-	VCCP1	-	-	-
M21	-	-	-	-	PR24A	2	-	-
M22	PR22B	2	C[3]	-	PR23B	2	C[3]	-
L22	PR22A	2	T[3]	-	PR23A	2	T[3]	-
-	GNDIO2	2	-	-	GNDIO2	2	-	-
L19	-	-	-	-	PR22B	2	C[3]	-
L20	-	-	-	-	PR22A	2	T[3]	-
L21	PR21B	2	C	PCLKC2_0	PR21B	2	C	PCLKC2_0
K22	PR21A	2	T	PCLKT2_0	PR21A	2	T	PCLKT2_0

Petitioners
Ex. 1067, p. 4-48

LFXP15 & LFXP20 Logic Signal Connections: 484 fpBGA (Cont.)

	LFXP15				LFXP20			
Ball Number	Ball Function	Bank	Differential	Dual Function	Ball Function	Bank	Differential	Dual Function
J21	PR20B	2	C[3]	-	PR20B	2	C[3]	-
J22	PR20A	2	T[3]	DQS	PR20A	2	T[3]	DQS
K18	PR19B	2	-	-	PR19B	2	-	-
K19	PR18A	2	-	VREF1_2	PR18A	2	-	VREF1_2
-	GNDIO2	2	-	-	GNDIO2	2	-	-
K21	PR17B	2	C[3]	-	PR17B	2	C[3]	-
K20	PR17A	2	T[3]	-	PR17A	2	T[3]	-
H21	PR16B	2	C	RUM0_PLLC_IN_A	PR16B	2	C	RUM0_PLLC_IN_A
H22	PR16A	2	T	RUM0_PLLT_IN_A	PR16A	2	T	RUM0_PLLT_IN_A
J20	PR15B	2	C[3]	-	PR15B	2	C[3]	-
J19	PR15A	2	T[3]	-	PR15A	2	T[3]	-
-	GNDIO2	2	-	-	GNDIO2	2	-	-
J17	PR13B	2	C[3]	-	PR13B	2	C[3]	-
J18	PR13A	2	T[3]	-	PR13A	2	T[3]	-
G21	PR12B	2	C	-	PR12B	2	C	-
G22	PR12A	2	T	-	PR12A	2	T	-
F21	PR11B	2	C[3]	-	PR11B	2	C[3]	-
F22	PR11A	2	T[3]	DQS	PR11A	2	T[3]	DQS
-	GNDIO2	2	-	-	GNDIO2	2	-	-
H20	PR10B	2	-	-	PR10B	2	-	-
H19	PR9A	2	-	VREF2_2	PR9A	2	-	VREF2_2
H17	PR8B	2	C[3]	-	PR8B	2	C[3]	-
H18	PR8A	2	T[3]	-	PR8A	2	T[3]	-
E21	PR7B	2	C	RUM0_PLLC_FB_A	PR7B	2	C	RUM0_PLLC_FB_A
E22	PR7A	2	T	RUM0_PLLT_FB_A	PR7A	2	T	RUM0_PLLT_FB_A
D21	PR6B	2	C[3]	-	PR6B	2	C[3]	-
D22	PR6A	2	T[3]	-	PR6A	2	T[3]	-
G20	PR5B	2	C[3]	-	PR5B	2	C[3]	-
G19	PR5A	2	T[3]	-	PR5A	2	T[3]	-
G17	PR4B	2	C	-	PR4B	2	C	-
G18	PR4A	2	T	-	PR4A	2	T	-
-	GNDIO2	2	-	-	GNDIO2	2	-	-
F18	PR3B	2	C[3]	-	PR3B	2	C[3]	-
F19	PR3A	2	T[3]	-	PR3A	2	T[3]	-
C22	PR2B	2	-	-	PR2B	2	-	-
F20	TDO	-	-	-	TDO	-	-	-
E20	VCCJ	-	-	-	VCCJ	-	-	-
D19	TDI	-	-	-	TDI	-	-	-
E19	TMS	-	-	-	TMS	-	-	-
D20	TCK	-	-	-	TCK	-	-	-
C20	-	-	-	-	PT56A	1	-	-
-	GNDIO1	1	-	-	GNDIO1	1	-	-

Petitioners
Ex. 1067, p. 4-49

LFXP15 & LFXP20 Logic Signal Connections: 484 fpBGA (Cont.)

	LFXP15				LFXP20			
Ball Number	Ball Function	Bank	Differential	Dual Function	Ball Function	Bank	Differential	Dual Function
D18	-	-	-	-	PT55B	1	C	-
E18	-	-	-	-	PT55A	1	T	-
C19	-	-	-	-	PT54B	1	C	-
C18	-	-	-	-	PT54A	1	T	-
C21	-	-	-	-	PT53B	1	C	-
-	GNDIO1	1	-	-	GNDIO1	1	-	-
B21	-	-	-	-	PT53A	1	T	-
E17	PT48B	1	C	-	PT52B	1	C	-
E16	PT48A	1	T	-	PT52A	1	T	-
C17	PT47B	1	C	-	PT51B	1	C	-
D17	PT47A	1	T	DQS	PT51A	1	T	DQS
F17	PT46B	1	-	-	PT50B	1	-	-
F16	PT45A	1	-	-	PT49A	1	-	-
C16	PT44B	1	C	-	PT48B	1	C	-
D16	PT44A	1	T	-	PT48A	1	T	-
A20	PT43B	1	C	-	PT47B	1	C	-
-	GNDIO1	1	-	-	GNDIO1	1	-	-
B20	PT43A	1	T	-	PT47A	1	T	-
A19	PT42B	1	C	-	PT46B	1	C	-
B19	PT42A	1	T	-	PT46A	1	T	-
C15	PT41B	1	C	-	PT45B	1	C	-
D15	PT41A	1	T	-	PT45A	1	T	-
A18	PT40B	1	C	-	PT44B	1	C	-
B18	PT40A	1	T	-	PT44A	1	T	-
F15	PT39B	1	C	VREF1_1	PT43B	1	C	VREF1_1
-	GNDIO1	1	-	-	GNDIO1	1	-	-
E15	PT39A	1	T	DQS	PT43A	1	T	DQS
A17	PT38B	1	-	-	PT42B	1	-	-
B17	PT37A	1	-	-	PT41A	1	-	-
E14	PT36B	1	C	-	PT40B	1	C	-
F14	PT36A	1	T	-	PT40A	1	T	-
D14	PT35B	1	C	-	PT39B	1	C	-
C14	PT35A	1	T	D0	PT39A	1	T	D0
A16	PT34B	1	C	D1	PT38B	1	C	D1
B16	PT34A	1	T	VREF2_1	PT38A	1	T	VREF2_1
A15	PT33B	1	C	-	PT37B	1	C	-
B15	PT33A	1	T	D2	PT37A	1	T	D2
-	GNDIO1	1	-	-	GNDIO1	1	-	-
E13	PT32B	1	C	D3	PT36B	1	C	D3
D13	PT32A	1	T	-	PT36A	1	T	-
C13	PT31B	1	C	-	PT35B	1	C	-
B13	PT31A	1	T	DQS	PT35A	1	T	DQS

Petitioners
Ex. 1067, p. 4-50

LFXP15 & LFXP20 Logic Signal Connections: 484 fpBGA (Cont.)

	LFXP15				LFXP20			
Ball Number	Ball Function	Bank	Differential	Dual Function	Ball Function	Bank	Differential	Dual Function
A14	PT30B	1	-	-	PT34B	1	-	-
B14	PT29A	1	-	D4	PT33A	1	-	D4
C12	PT28B	1	C	-	PT32B	1	C	-
B12	PT28A	1	T	D5	PT32A	1	T	D5
-	GNDIO1	1	-	-	GNDIO1	1	-	-
D12	PT27B	1	C	D6	PT31B	1	C	D6
E12	PT27A	1	T	-	PT31A	1	T	-
A13	PT26B	1	C	D7	PT30B	1	C	D7
A12	PT26A	1	T	-	PT30A	1	T	-
A11	PT25B	0	C	BUSY	PT29B	0	C	BUSY
-	GNDIO0	0	-	-	GNDIO0	0	-	-
A10	PT25A	0	T	CS1N	PT29A	0	T	CS1N
D11	PT24B	0	C	PCLKC0_0	PT28B	0	C	PCLKC0_0
E11	PT24A	0	T	PCLKT0_0	PT28A	0	T	PCLKT0_0
B11	PT23B	0	C	-	PT27B	0	C	-
C11	PT23A	0	T	DQS	PT27A	0	T	DQS
B9	PT22B	0	-	-	PT26B	0	-	-
A9	PT21A	0	-	DOUT	PT25A	0	-	DOUT
B8	PT20B	0	C	-	PT24B	0	C	-
-	GNDIO0	0	-	-	GNDIO0	0	-	-
A8	PT20A	0	T	WRITEN	PT24A	0	T	WRITEN
E10	PT19B	0	C	-	PT23B	0	C	-
D10	PT19A	0	T	VREF1_0	PT23A	0	T	VREF1_0
C10	PT18B	0	C	-	PT22B	0	C	-
B10	PT18A	0	T	DI	PT22A	0	T	DI
B7	PT17B	0	C	-	PT21B	0	C	-
A7	PT17A	0	T	CSN	PT21A	0	T	CSN
C9	PT16B	0	C	-	PT20B	0	C	-
D9	PT16A	0	T	-	PT20A	0	T	-
B6	PT15B	0	C	VREF2_0	PT19B	0	C	VREF2_0
A6	PT15A	0	T	DQS	PT19A	0	T	DQS
F9	PT14B	0	-	-	PT18B	0	-	-
E9	PT13A	0	-	-	PT17A	0	-	-
-	GNDIO0	0	-	-	GNDIO0	0	-	-
B5	PT12B	0	C	-	PT16B	0	C	-
A5	PT12A	0	T	-	PT16A	0	T	-
C8	PT11B	0	C	-	PT15B	0	C	-
D8	PT11A	0	T	-	PT15A	0	T	-
B4	PT10B	0	C	-	PT14B	0	C	-
A4	PT10A	0	T	-	PT14A	0	T	-
F8	PT9B	0	C	-	PT13B	0	C	-
E8	PT9A	0	T	-	PT13A	0	T	-

Petitioners
Ex. 1067, p. 4-51

LFXP15 & LFXP20 Logic Signal Connections: 484 fpBGA (Cont.)

	LFXP15				LFXP20			
Ball Number	Ball Function	Bank	Differential	Dual Function	Ball Function	Bank	Differential	Dual Function
B3	PT8B	0	C	-	PT12B	0	C	-
A3	PT8A	0	T	-	PT12A	0	T	-
-	GNDIO0	0	-	-	GNDIO0	0	-	-
D7	PT7B	0	C	-	PT11B	0	C	-
C7	PT7A	0	T	DQS	PT11A	0	T	DQS
B2	PT6B	0	-	-	PT10B	0	-	-
C2	PT5A	0	-	-	PT9A	0	-	-
C3	PT4B	0	C	-	PT8B	0	C	-
D3	PT4A	0	T	-	PT8A	0	T	-
F7	PT3B	0	C	-	PT7B	0	C	-
E7	PT3A	0	T	-	PT7A	0	T	-
-	GNDIO0	0	-	-	GNDIO0	0	-	-
C6	-	-	-	-	PT6B	0	C	-
D6	-	-	-	-	PT6A	0	T	-
C5	-	-	-	-	PT5B	0	C	-
C4	-	-	-	-	PT5A	0	T	-
F6	-	-	-	-	PT4B	0	C	-
E6	-	-	-	-	PT4A	0	T	-
-	GNDIO0	0	-	-	GNDIO0	0	-	-
E4	-	-	-	-	PT3B	0	-	-
E5	CFG0	0	-	-	CFG0	0	-	-
D4	CFG1	0	-	-	CFG1	0	-	-
D5	DONE	0	-	-	DONE	0	-	-
A1	GND	-	-	-	GND	-	-	-
A2	GND	-	-	-	GND	-	-	-
A21	GND	-	-	-	GND	-	-	-
A22	GND	-	-	-	GND	-	-	-
AA1	GND	-	-	-	GND	-	-	-
AA22	GND	-	-	-	GND	-	-	-
AB1	GND	-	-	-	GND	-	-	-
AB2	GND	-	-	-	GND	-	-	-
AB21	GND	-	-	-	GND	-	-	-
AB22	GND	-	-	-	GND	-	-	-
B1	GND	-	-	-	GND	-	-	-
B22	GND	-	-	-	GND	-	-	-
H14	GND	-	-	-	GND	-	-	-
H9	GND	-	-	-	GND	-	-	-
J10	GND	-	-	-	GND	-	-	-
J11	GND	-	-	-	GND	-	-	-
J12	GND	-	-	-	GND	-	-	-
J13	GND	-	-	-	GND	-	-	-
J14	GND	-	-	-	GND	-	-	-

Petitioners
Ex. 1067, p. 4-52

LFXP15 & LFXP20 Logic Signal Connections: 484 fpBGA (Cont.)

	LFXP15				LFXP20			
Ball Number	Ball Function	Bank	Differential	Dual Function	Ball Function	Bank	Differential	Dual Function
J15	GND	-	-	-	GND	-	-	-
J8	GND	-	-	-	GND	-	-	-
J9	GND	-	-	-	GND	-	-	-
K10	GND	-	-	-	GND	-	-	-
K11	GND	-	-	-	GND	-	-	-
K12	GND	-	-	-	GND	-	-	-
K13	GND	-	-	-	GND	-	-	-
K14	GND	-	-	-	GND	-	-	-
K9	GND	-	-	-	GND	-	-	-
L10	GND	-	-	-	GND	-	-	-
L11	GND	-	-	-	GND	-	-	-
L12	GND	-	-	-	GND	-	-	-
L13	GND	-	-	-	GND	-	-	-
L14	GND	-	-	-	GND	-	-	-
L9	GND	-	-	-	GND	-	-	-
M10	GND	-	-	-	GND	-	-	-
M11	GND	-	-	-	GND	-	-	-
M12	GND	-	-	-	GND	-	-	-
M13	GND	-	-	-	GND	-	-	-
M14	GND	-	-	-	GND	-	-	-
M9	GND	-	-	-	GND	-	-	-
N10	GND	-	-	-	GND	-	-	-
N11	GND	-	-	-	GND	-	-	-
N12	GND	-	-	-	GND	-	-	-
N13	GND	-	-	-	GND	-	-	-
N14	GND	-	-	-	GND	-	-	-
N9	GND	-	-	-	GND	-	-	-
P10	GND	-	-	-	GND	-	-	-
P11	GND	-	-	-	GND	-	-	-
P12	GND	-	-	-	GND	-	-	-
P13	GND	-	-	-	GND	-	-	-
P14	GND	-	-	-	GND	-	-	-
P15	GND	-	-	-	GND	-	-	-
P8	GND	-	-	-	GND	-	-	-
P9	GND	-	-	-	GND	-	-	-
R14	GND	-	-	-	GND	-	-	-
R9	GND	-	-	-	GND	-	-	-
F10	VCC	-	-	-	VCC	-	-	-
F13	VCC	-	-	-	VCC	-	-	-
G10	VCC	-	-	-	VCC	-	-	-
G13	VCC	-	-	-	VCC	-	-	-
G14	VCC	-	-	-	VCC	-	-	-

Petitioners
Ex. 1067, p. 4-53

LFXP15 & LFXP20 Logic Signal Connections: 484 fpBGA (Cont.)

	LFXP15				LFXP20			
Ball Number	Ball Function	Bank	Differential	Dual Function	Ball Function	Bank	Differential	Dual Function
G9	VCC	-	-	-	VCC	-	-	-
H15	VCC	-	-	-	VCC	-	-	-
H8	VCC	-	-	-	VCC	-	-	-
J16	VCC	-	-	-	VCC	-	-	-
J7	VCC	-	-	-	VCC	-	-	-
K16	VCC	-	-	-	VCC	-	-	-
K17	VCC	-	-	-	VCC	-	-	-
K6	VCC	-	-	-	VCC	-	-	-
K7	VCC	-	-	-	VCC	-	-	-
N16	VCC	-	-	-	VCC	-	-	-
N17	VCC	-	-	-	VCC	-	-	-
N6	VCC	-	-	-	VCC	-	-	-
N7	VCC	-	-	-	VCC	-	-	-
P16	VCC	-	-	-	VCC	-	-	-
P7	VCC	-	-	-	VCC	-	-	-
R15	VCC	-	-	-	VCC	-	-	-
R8	VCC	-	-	-	VCC	-	-	-
T10	VCC	-	-	-	VCC	-	-	-
T13	VCC	-	-	-	VCC	-	-	-
T14	VCC	-	-	-	VCC	-	-	-
T9	VCC	-	-	-	VCC	-	-	-
U10	VCC	-	-	-	VCC	-	-	-
U13	VCC	-	-	-	VCC	-	-	-
G15	VCCAUX	-	-	-	VCCAUX	-	-	-
G16	VCCAUX	-	-	-	VCCAUX	-	-	-
G7	VCCAUX	-	-	-	VCCAUX	-	-	-
G8	VCCAUX	-	-	-	VCCAUX	-	-	-
H16	VCCAUX	-	-	-	VCCAUX	-	-	-
H7	VCCAUX	-	-	-	VCCAUX	-	-	-
R16	VCCAUX	-	-	-	VCCAUX	-	-	-
R7	VCCAUX	-	-	-	VCCAUX	-	-	-
T15	VCCAUX	-	-	-	VCCAUX	-	-	-
T16	VCCAUX	-	-	-	VCCAUX	-	-	-
T7	VCCAUX	-	-	-	VCCAUX	-	-	-
T8	VCCAUX	-	-	-	VCCAUX	-	-	-
F11	VCCIO0	0	-	-	VCCIO0	0	-	-
G11	VCCIO0	0	-	-	VCCIO0	0	-	-
H10	VCCIO0	0	-	-	VCCIO0	0	-	-
H11	VCCIO0	0	-	-	VCCIO0	0	-	-
F12	VCCIO1	1	-	-	VCCIO1	1	-	-
G12	VCCIO1	1	-	-	VCCIO1	1	-	-
H12	VCCIO1	1	-	-	VCCIO1	1	-	-

Petitioners
Ex. 1067, p. 4-54

LFXP15 & LFXP20 Logic Signal Connections: 484 fpBGA (Cont.)

	LFXP15				LFXP20			
Ball Number	Ball Function	Bank	Differential	Dual Function	Ball Function	Bank	Differential	Dual Function
H13	VCCIO1	1	-	-	VCCIO1	1	-	-
K15	VCCIO2	2	-	-	VCCIO2	2	-	-
L15	VCCIO2	2	-	-	VCCIO2	2	-	-
L16	VCCIO2	2	-	-	VCCIO2	2	-	-
L17	VCCIO2	2	-	-	VCCIO2	2	-	-
M15	VCCIO3	3	-	-	VCCIO3	3	-	-
M16	VCCIO3	3	-	-	VCCIO3	3	-	-
M17	VCCIO3	3	-	-	VCCIO3	3	-	-
N15	VCCIO3	3	-	-	VCCIO3	3	-	-
R12	VCCIO4	4	-	-	VCCIO4	4	-	-
R13	VCCIO4	4	-	-	VCCIO4	4	-	-
T12	VCCIO4	4	-	-	VCCIO4	4	-	-
U12	VCCIO4	4	-	-	VCCIO4	4	-	-
R10	VCCIO5	5	-	-	VCCIO5	5	-	-
R11	VCCIO5	5	-	-	VCCIO5	5	-	-
T11	VCCIO5	5	-	-	VCCIO5	5	-	-
U11	VCCIO5	5	-	-	VCCIO5	5	-	-
M6	VCCIO6	6	-	-	VCCIO6	6	-	-
M7	VCCIO6	6	-	-	VCCIO6	6	-	-
M8	VCCIO6	6	-	-	VCCIO6	6	-	-
N8	VCCIO6	6	-	-	VCCIO6	6	-	-
K8	VCCIO7	7	-	-	VCCIO7	7	-	-
L6	VCCIO7	7	-	-	VCCIO7	7	-	-
L7	VCCIO7	7	-	-	VCCIO7	7	-	-
L8	VCCIO7	7	-	-	VCCIO7	7	-	-

1. Applies to LFXP “C” only.
2. Applies to LFXP “E” only.
3. Supports dedicated LVDS outputs.

Petitioners
Ex. 1067, p. 4-55

Part Number Description

LFXP XX X – X XXXXXX X

Device Family
LatticeXP FPGA

Logic Capacity
3K LUTs = 3
6K LUTs = 6
10K LUTs = 10
15K LUTs = 15
20K LUTs = 20

Supply Voltage
C = 1.8V/2.5V/3.3V
E = 1.2V

Note: Parts dual marked per table below.

Grade
C = Commercial
I = Industrial

Package
T100 = 100-pin TQFP
T144 = 144-pin TQFP
Q208 = 208-pin PQFP
F256 = 256-ball fpBGA
F388 = 388-ball fpBGA
F484 = 484-ball fpBGA

TN100 = 100-pin Lead-free TQFP
TN144 = 144-pin Lead-free TQFP
QN208 = 208-pin Lead-free PQFP
FN256 = 256-ball Lead-free fpBGA
FN388 = 388-ball Lead-free fpBGA
FN484 = 484-ball Lead-free fpBGA

Speed
3 = Slowest
4
5 = Fastest

Ordering Information (Contact Factory for Specific Device Availability)

Note: LatticeXP devices are dual marked. For example, the commercial speed grade LFXP10E-4F256C is also marked with industrial grade -3I (LFXP10E-3F256I). The commercial grade is one speed grade faster than the associated dual mark industrial grade. The slowest commercial speed grade does not have industrial markings. The markings appear as follows:

© 2005 Lattice Semiconductor Corp. All Lattice trademarks, registered trademarks, patents, and disclaimers are as listed at www.latticesemi.com/legal. All other brand or product names are trademarks or registered trademarks of their respective holders. The specifications and information herein are subject to change without notice.

Petitioners
Ex. 1067, p. 5-1

Conventional Packaging

Commercial

Part Number	I/Os	Voltage	Grade	Package	Pins	Temp.	LUTs
LFXP3C-3Q208C	136	1.8/2.5/3.3V	-3	PQFP	208	COM	3.1K
LFXP3C-4Q208C	136	1.8/2.5/3.3V	-4	PQFP	208	COM	3.1K
LFXP3C-5Q208C	136	1.8/2.5/3.3V	-5	PQFP	208	COM	3.1K
LFXP3C-3T144C	100	1.8/2.5/3.3V	-3	TQFP	144	COM	3.1K
LFXP3C-4T144C	100	1.8/2.5/3.3V	-4	TQFP	144	COM	3.1K
LFXP3C-5T144C	100	1.8/2.5/3.3V	-5	TQFP	144	COM	3.1K
LFXP3C-3T100C	62	1.8/2.5/3.3V	-3	TQFP	100	COM	3.1K
LFXP3C-4T100C	62	1.8/2.5/3.3V	-4	TQFP	100	COM	3.1K
LFXP3C-5T100C	62	1.8/2.5/3.3V	-5	TQFP	100	COM	3.1K

Part Number	I/Os	Voltage	Grade	Package	Pins	Temp.	LUTs
LFXP6C-3F256C	188	1.8/2.5/3.3V	-3	fpBGA	256	COM	5.8K
LFXP6C-4F256C	188	1.8/2.5/3.3V	-4	fpBGA	256	COM	5.8K
LFXP6C-5F256C	188	1.8/2.5/3.3V	-5	fpBGA	256	COM	5.8K
LFXP6C-3Q208C	142	1.8/2.5/3.3V	-3	PQFP	208	COM	5.8K
LFXP6C-4Q208C	142	1.8/2.5/3.3V	-4	PQFP	208	COM	5.8K
LFXP6C-5Q208C	142	1.8/2.5/3.3V	-5	PQFP	208	COM	5.8K
LFXP6C-3T144C	100	1.8/2.5/3.3V	-3	TQFP	144	COM	5.8K
LFXP6C-4T144C	100	1.8/2.5/3.3V	-4	TQFP	144	COM	5.8K
LFXP6C-5T144C	100	1.8/2.5/3.3V	-5	TQFP	144	COM	5.8K

Part Number	I/Os	Voltage	Grade	Package	Pins	Temp.	LUTs
LFXP10C-3F388C	244	1.8/2.5/3.3V	-3	fpBGA	388	COM	9.7K
LFXP10C-4F388C	244	1.8/2.5/3.3V	-4	fpBGA	388	COM	9.7K
LFXP10C-5F388C	244	1.8/2.5/3.3V	-5	fpBGA	388	COM	9.7K
LFXP10C-3F256C	188	1.8/2.5/3.3V	-3	fpBGA	256	COM	9.7K
LFXP10C-4F256C	188	1.8/2.5/3.3V	-4	fpBGA	256	COM	9.7K
LFXP10C-5F256C	188	1.8/2.5/3.3V	-5	fpBGA	256	COM	9.7K

Petitioners
Ex. 1067, p. 5-2

Commercial (Cont.)

Part Number	I/Os	Voltage	Grade	Package	Pins	Temp.	LUTs
LFXP15C-3F484C	300	1.8/2.5/3.3V	-3	fpBGA	484	COM	15.5K
LFXP15C-4F484C	300	1.8/2.5/3.3V	-4	fpBGA	484	COM	15.5K
LFXP15C-5F484C	300	1.8/2.5/3.3V	-5	fpBGA	484	COM	15.5K
LFXP15C-3F388C	268	1.8/2.5/3.3V	-3	fpBGA	388	COM	15.5K
LFXP15C-4F388C	268	1.8/2.5/3.3V	-4	fpBGA	388	COM	15.5K
LFXP15C-5F388C	268	1.8/2.5/3.3V	-5	fpBGA	388	COM	15.5K
LFXP15C-3F256C	188	1.8/2.5/3.3V	-3	fpBGA	256	COM	15.5K
LFXP15C-4F256C	188	1.8/2.5/3.3V	-4	fpBGA	256	COM	15.5K
LFXP15C-5F256C	188	1.8/2.5/3.3V	-5	fpBGA	256	COM	15.5K

Part Number	I/Os	Voltage	Grade	Package	Pins	Temp.	LUTs
LFXP20C-3F484C	340	1.8/2.5/3.3V	-3	fpBGA	484	COM	19.7K
LFXP20C-4F484C	340	1.8/2.5/3.3V	-4	fpBGA	484	COM	19.7K
LFXP20C-5F484C	340	1.8/2.5/3.3V	-5	fpBGA	484	COM	19.7K
LFXP20C-3F388C	268	1.8/2.5/3.3V	-3	fpBGA	388	COM	19.7K
LFXP20C-4F388C	268	1.8/2.5/3.3V	-4	fpBGA	388	COM	19.7K
LFXP20C-5F388C	268	1.8/2.5/3.3V	-5	fpBGA	388	COM	19.7K
LFXP20C-3F256C	188	1.8/2.5/3.3V	-3	fpBGA	256	COM	19.7K
LFXP20C-4F256C	188	1.8/2.5/3.3V	-4	fpBGA	256	COM	19.7K
LFXP20C-5F256C	188	1.8/2.5/3.3V	-5	fpBGA	256	COM	19.7K

Part Number	I/Os	Voltage	Grade	Package	Pins	Temp.	LUTs
LFXP3E-3Q208C	136	1.2V	-3	PQFP	208	COM	3.1K
LFXP3E-4Q208C	136	1.2V	-4	PQFP	208	COM	3.1K
LFXP3E-5Q208C	136	1.2V	-5	PQFP	208	COM	3.1K
LFXP3E-3T144C	100	1.2V	-3	TQFP	144	COM	3.1K
LFXP3E-4T144C	100	1.2V	-4	TQFP	144	COM	3.1K
LFXP3E-5T144C	100	1.2V	-5	TQFP	144	COM	3.1K
LFXP3E-3T100C	62	1.2V	-3	TQFP	100	COM	3.1K
LFXP3E-4T100C	62	1.2V	-4	TQFP	100	COM	3.1K
LFXP3E-5T100C	62	1.2V	-5	TQFP	100	COM	3.1K

Petitioners
Ex. 1067, p. 5-3

Commercial (Cont.)

Part Number	I/Os	Voltage	Grade	Package	Pins	Temp.	LUTs
LFXP6E-3F256C	188	1.2V	-3	fpBGA	256	COM	5.8K
LFXP6E-4F256C	188	1.2V	-4	fpBGA	256	COM	5.8K
LFXP6E-5F256C	188	1.2V	-5	fpBGA	256	COM	5.8K
LFXP6E-3Q208C	142	1.2V	-3	PQFP	208	COM	5.8K
LFXP6E-4Q208C	142	1.2V	-4	PQFP	208	COM	5.8K
LFXP6E-5Q208C	142	1.2V	-5	PQFP	208	COM	5.8K
LFXP6E-3T144C	100	1.2V	-3	TQFP	144	COM	5.8K
LFXP6E-4T144C	100	1.2V	-4	TQFP	144	COM	5.8K
LFXP6E-5T144C	100	1.2V	-5	TQFP	144	COM	5.8K

Part Number	I/Os	Voltage	Grade	Package	Pins	Temp.	LUTs
LFXP10E-3F388C	244	1.2V	-3	fpBGA	388	COM	9.7K
LFXP10E-4F388C	244	1.2V	-4	fpBGA	388	COM	9.7K
LFXP10E-5F388C	244	1.2V	-5	fpBGA	388	COM	9.7K
LFXP10E-3F256C	188	1.2V	-3	fpBGA	256	COM	9.7K
LFXP10E-4F256C	188	1.2V	-4	fpBGA	256	COM	9.7K
LFXP10E-5F256C	188	1.2V	-5	fpBGA	256	COM	9.7K

Part Number	I/Os	Voltage	Grade	Package	Pins	Temp.	LUTs
LFXP15E-3F484C	300	1.2V	-3	fpBGA	484	COM	15.5K
LFXP15E-4F484C	300	1.2V	-4	fpBGA	484	COM	15.5K
LFXP15E-5F484C	300	1.2V	-5	fpBGA	484	COM	15.5K
LFXP15E-3F388C	268	1.2V	-3	fpBGA	388	COM	15.5K
LFXP15E-4F388C	268	1.2V	-4	fpBGA	388	COM	15.5K
LFXP15E-5F388C	268	1.2V	-5	fpBGA	388	COM	15.5K
LFXP15E-3F256C	188	1.2V	-3	fpBGA	256	COM	15.5K
LFXP15E-4F256C	188	1.2V	-4	fpBGA	256	COM	15.5K
LFXP15E-5F256C	188	1.2V	-5	fpBGA	256	COM	15.5K

Petitioners
Ex. 1067, p. 5-4

Commercial (Cont.)

Part Number	I/Os	Voltage	Grade	Package	Pins	Temp.	LUTs
LFXP20E-3F484C	340	1.2V	-3	fpBGA	484	COM	19.7K
LFXP20E-4F484C	340	1.2V	-4	fpBGA	484	COM	19.7K
LFXP20E-5F484C	340	1.2V	-5	fpBGA	484	COM	19.7K
LFXP20E-3F388C	268	1.2V	-3	fpBGA	388	COM	19.7K
LFXP20E-4F388C	268	1.2V	-4	fpBGA	388	COM	19.7K
LFXP20E-5F388C	268	1.2V	-5	fpBGA	388	COM	19.7K
LFXP20E-3F256C	188	1.2V	-3	fpBGA	256	COM	19.7K
LFXP20E-4F256C	188	1.2V	-4	fpBGA	256	COM	19.7K
LFXP20E-5F256C	188	1.2V	-5	fpBGA	256	COM	19.7K

Industrial

Part Number	I/Os	Voltage	Grade	Package	Pins	Temp.	LUTs
LFXP3C-3Q208I	136	1.8/2.5/3.3V	-3	PQFP	208	IND	3.1K
LFXP3C-4Q208I	136	1.8/2.5/3.3V	-4	PQFP	208	IND	3.1K
LFXP3C-3T144I	100	1.8/2.5/3.3V	-3	TQFP	144	IND	3.1K
LFXP3C-4T144I	100	1.8/2.5/3.3V	-4	TQFP	144	IND	3.1K
LFXP3C-3T100I	62	1.8/2.5/3.3V	-3	TQFP	100	IND	3.1K
LFXP3C-4T100I	62	1.8/2.5/3.3V	-4	TQFP	100	IND	3.1K

Part Number	I/Os	Voltage	Grade	Package	Pins	Temp.	LUTs
LFXP6C-3F256I	188	1.8/2.5/3.3V	-3	fpBGA	256	IND	5.8K
LFXP6C-4F256I	188	1.8/2.5/3.3V	-4	fpBGA	256	IND	5.8K
LFXP6C-3Q208I	142	1.8/2.5/3.3V	-3	PQFP	208	IND	5.8K
LFXP6C-4Q208I	142	1.8/2.5/3.3V	-4	PQFP	208	IND	5.8K
LFXP6C-3T144I	100	1.8/2.5/3.3V	-3	TQFP	144	IND	5.8K
LFXP6C-4T144I	100	1.8/2.5/3.3V	-4	TQFP	144	IND	5.8K

Part Number	I/Os	Voltage	Grade	Package	Pins	Temp.	LUTs
LFXP10C-3F388I	244	1.8/2.5/3.3V	-3	fpBGA	388	IND	9.7K
LFXP10C-4F388I	244	1.8/2.5/3.3V	-4	fpBGA	388	IND	9.7K
LFXP10C-3F256I	188	1.8/2.5/3.3V	-3	fpBGA	256	IND	9.7K
LFXP10C-4F256I	188	1.8/2.5/3.3V	-4	fpBGA	256	IND	9.7K

Petitioners
Ex. 1067, p. 5-5

Industrial (Cont.)

Part Number	I/Os	Voltage	Grade	Package	Pins	Temp.	LUTs
LFXP15C-3F484I	300	1.8/2.5/3.3V	-3	fpBGA	484	IND	15.5K
LFXP15C-4F484I	300	1.8/2.5/3.3V	-4	fpBGA	484	IND	15.5K
LFXP15C-3F388I	268	1.8/2.5/3.3V	-3	fpBGA	388	IND	15.5K
LFXP15C-4F388I	268	1.8/2.5/3.3V	-4	fpBGA	388	IND	15.5K
LFXP15C-3F256I	188	1.8/2.5/3.3V	-3	fpBGA	256	IND	15.5K
LFXP15C-4F256I	188	1.8/2.5/3.3V	-4	fpBGA	256	IND	15.5K

Part Number	I/Os	Voltage	Grade	Package	Pins	Temp.	LUTs
LFXP20C-3F484I	340	1.8/2.5/3.3V	-3	fpBGA	484	IND	19.7K
LFXP20C-4F484I	340	1.8/2.5/3.3V	-4	fpBGA	484	IND	19.7K
LFXP20C-3F388I	268	1.8/2.5/3.3V	-3	fpBGA	388	IND	19.7K
LFXP20C-4F388I	268	1.8/2.5/3.3V	-4	fpBGA	388	IND	19.7K
LFXP20C-3F256I	188	1.8/2.5/3.3V	-3	fpBGA	256	IND	19.7K
LFXP20C-4F256I	188	1.8/2.5/3.3V	-4	fpBGA	256	IND	19.7K

Part Number	I/Os	Voltage	Grade	Package	Pins	Temp.	LUTs
LFXP3E-3Q208I	136	1.2V	-3	PQFP	208	IND	3.1K
LFXP3E-4Q208I	136	1.2V	-4	PQFP	208	IND	3.1K
LFXP3E-3T144I	100	1.2V	-3	TQFP	144	IND	3.1K
LFXP3E-4T144I	100	1.2V	-4	TQFP	144	IND	3.1K
LFXP3E-3T100I	62	1.2V	-3	TQFP	100	IND	3.1K
LFXP3E-4T100I	62	1.2V	-4	TQFP	100	IND	3.1K

Part Number	I/Os	Voltage	Grade	Package	Pins	Temp.	LUTs
LFXP6E-3F256I	188	1.2V	-3	fpBGA	256	IND	5.8K
LFXP6E-4F256I	188	1.2V	-4	fpBGA	256	IND	5.8K
LFXP6E-3Q208I	142	1.2V	-3	PQFP	208	IND	5.8K
LFXP6E-4Q208I	142	1.2V	-4	PQFP	208	IND	5.8K
LFXP6E-3T144I	100	1.2V	-3	TQFP	144	IND	5.8K
LFXP6E-4T144I	100	1.2V	-4	TQFP	144	IND	5.8K

Part Number	I/Os	Voltage	Grade	Package	Pins	Temp.	LUTs
LFXP10E-3F388I	244	1.2V	-3	fpBGA	388	IND	9.7K
LFXP10E-4F388I	244	1.2V	-4	fpBGA	388	IND	9.7K
LFXP10E-3F256I	188	1.2V	-3	fpBGA	256	IND	9.7K
LFXP10E-4F256I	188	1.2V	-4	fpBGA	256	IND	9.7K

Petitioners
Ex. 1067, p. 5-6

Industrial (Cont.)

Part Number	I/Os	Voltage	Grade	Package	Pins	Temp.	LUTs
LFXP15E-3F484I	300	1.2V	-3	fpBGA	484	IND	15.5K
LFXP15E-4F484I	300	1.2V	-4	fpBGA	484	IND	15.5K
LFXP15E-3F388I	268	1.2V	-3	fpBGA	388	IND	15.5K
LFXP15E-4F388I	268	1.2V	-4	fpBGA	388	IND	15.5K
LFXP15E-3F256I	188	1.2V	-3	fpBGA	256	IND	15.5K
LFXP15E-4F256I	188	1.2V	-4	fpBGA	256	IND	15.5K

Part Number	I/Os	Voltage	Grade	Package	Pins	Temp.	LUTs
LFXP20E-3F484I	340	1.2V	-3	fpBGA	484	IND	19.7K
LFXP20E-4F484I	340	1.2V	-4	fpBGA	484	IND	19.7K
LFXP20E-3F388I	268	1.2V	-3	fpBGA	388	IND	19.7K
LFXP20E-4F388I	268	1.2V	-4	fpBGA	388	IND	19.7K
LFXP20E-3F256I	188	1.2V	-3	fpBGA	256	IND	19.7K
LFXP20E-4F256I	188	1.2V	-4	fpBGA	256	IND	19.7K

Petitioners
Ex. 1067, p. 5-7

Lead-free Packaging

Commercial

Part Number	I/Os	Voltage	Grade	Package	Pins	Temp.	LUTs
LFXP3C-3QN208C	136	1.8/2.5/3.3V	-3	PQFP	208	COM	3.1K
LFXP3C-4QN208C	136	1.8/2.5/3.3V	-4	PQFP	208	COM	3.1K
LFXP3C-5QN208C	136	1.8/2.5/3.3V	-5	PQFP	208	COM	3.1K
LFXP3C-3TN144C	100	1.8/2.5/3.3V	-3	TQFP	144	COM	3.1K
LFXP3C-4TN144C	100	1.8/2.5/3.3V	-4	TQFP	144	COM	3.1K
LFXP3C-5TN144C	100	1.8/2.5/3.3V	-5	TQFP	144	COM	3.1K
LFXP3C-3TN100C	62	1.8/2.5/3.3V	-3	TQFP	100	COM	3.1K
LFXP3C-4TN100C	62	1.8/2.5/3.3V	-4	TQFP	100	COM	3.1K
LFXP3C-5TN100C	62	1.8/2.5/3.3V	-5	TQFP	100	COM	3.1K

Part Number	I/Os	Voltage	Grade	Package	Pins	Temp.	LUTs
LFXP6C-3FN256C	188	1.8/2.5/3.3V	-3	fpBGA	256	COM	5.8K
LFXP6C-4FN256C	188	1.8/2.5/3.3V	-4	fpBGA	256	COM	5.8K
LFXP6C-5FN256C	188	1.8/2.5/3.3V	-5	fpBGA	256	COM	5.8K
LFXP6C-3QN208C	142	1.8/2.5/3.3V	-3	PQFP	208	COM	5.8K
LFXP6C-4QN208C	142	1.8/2.5/3.3V	-4	PQFP	208	COM	5.8K
LFXP6C-5QN208C	142	1.8/2.5/3.3V	-5	PQFP	208	COM	5.8K
LFXP6C-3TN144C	100	1.8/2.5/3.3V	-3	TQFP	144	COM	5.8K
LFXP6C-4TN144C	100	1.8/2.5/3.3V	-4	TQFP	144	COM	5.8K
LFXP6C-5TN144C	100	1.8/2.5/3.3V	-5	TQFP	144	COM	5.8K

Part Number	I/Os	Voltage	Grade	Package	Pins	Temp.	LUTs
LFXP10C-3FN388C	244	1.8/2.5/3.3V	-3	fpBGA	388	COM	9.7K
LFXP10C-4FN388C	244	1.8/2.5/3.3V	-4	fpBGA	388	COM	9.7K
LFXP10C-5FN388C	244	1.8/2.5/3.3V	-5	fpBGA	388	COM	9.7K
LFXP10C-3FN256C	188	1.8/2.5/3.3V	-3	fpBGA	256	COM	9.7K
LFXP10C-4FN256C	188	1.8/2.5/3.3V	-4	fpBGA	256	COM	9.7K
LFXP10C-5FN256C	188	1.8/2.5/3.3V	-5	fpBGA	256	COM	9.7K

Part Number	I/Os	Voltage	Grade	Package	Pins	Temp.	LUTs
LFXP15C-3FN484C	300	1.8/2.5/3.3V	-3	fpBGA	484	COM	15.5K
LFXP15C-4FN484C	300	1.8/2.5/3.3V	-4	fpBGA	484	COM	15.5K
LFXP15C-5FN484C	300	1.8/2.5/3.3V	-5	fpBGA	484	COM	15.5K
LFXP15C-3FN388C	268	1.8/2.5/3.3V	-3	fpBGA	388	COM	15.5K
LFXP15C-4FN388C	268	1.8/2.5/3.3V	-4	fpBGA	388	COM	15.5K
LFXP15C-5FN388C	268	1.8/2.5/3.3V	-5	fpBGA	388	COM	15.5K
LFXP15C-3FN256C	188	1.8/2.5/3.3V	-3	fpBGA	256	COM	15.5K
LFXP15C-4FN256C	188	1.8/2.5/3.3V	-4	fpBGA	256	COM	15.5K
LFXP15C-5FN256C	188	1.8/2.5/3.3V	-5	fpBGA	256	COM	15.5K

Petitioners
Ex. 1067, p. 5-8

Commercial (Cont.)

Part Number	I/Os	Voltage	Grade	Package	Pins	Temp.	LUTs
LFXP20C-3FN484C	340	1.8/2.5/3.3V	-3	fpBGA	484	COM	19.7K
LFXP20C-4FN484C	340	1.8/2.5/3.3V	-4	fpBGA	484	COM	19.7K
LFXP20C-5FN484C	340	1.8/2.5/3.3V	-5	fpBGA	484	COM	19.7K
LFXP20C-3FN388C	268	1.8/2.5/3.3V	-3	fpBGA	388	COM	19.7K
LFXP20C-4FN388C	268	1.8/2.5/3.3V	-4	fpBGA	388	COM	19.7K
LFXP20C-5FN388C	268	1.8/2.5/3.3V	-5	fpBGA	388	COM	19.7K
LFXP20C-3FN256C	188	1.8/2.5/3.3V	-3	fpBGA	256	COM	19.7K
LFXP20C-4FN256C	188	1.8/2.5/3.3V	-4	fpBGA	256	COM	19.7K
LFXP20C-5FN256C	188	1.8/2.5/3.3V	-5	fpBGA	256	COM	19.7K

Part Number	I/Os	Voltage	Grade	Package	Pins	Temp.	LUTs
LFXP3E-3QN208C	136	1.2V	-3	PQFP	208	COM	3.1K
LFXP3E-4QN208C	136	1.2V	-4	PQFP	208	COM	3.1K
LFXP3E-5QN208C	136	1.2V	-5	PQFP	208	COM	3.1K
LFXP3E-3TN144C	100	1.2V	-3	TQFP	144	COM	3.1K
LFXP3E-4TN144C	100	1.2V	-4	TQFP	144	COM	3.1K
LFXP3E-5TN144C	100	1.2V	-5	TQFP	144	COM	3.1K
LFXP3E-3TN100C	62	1.2V	-3	TQFP	100	COM	3.1K
LFXP3E-4TN100C	62	1.2V	-4	TQFP	100	COM	3.1K
LFXP3E-5TN100C	62	1.2V	-5	TQFP	100	COM	3.1K

Part Number	I/Os	Voltage	Grade	Package	Pins	Temp.	LUTs
LFXP6E-3FN256C	188	1.2V	-3	fpBGA	256	COM	5.8K
LFXP6E-4FN256C	188	1.2V	-4	fpBGA	256	COM	5.8K
LFXP6E-5FN256C	188	1.2V	-5	fpBGA	256	COM	5.8K
LFXP6E-3QN208C	142	1.2V	-3	PQFP	208	COM	5.8K
LFXP6E-4QN208C	142	1.2V	-4	PQFP	208	COM	5.8K
LFXP6E-5QN208C	142	1.2V	-5	PQFP	208	COM	5.8K
LFXP6E-3TN144C	100	1.2V	-3	TQFP	144	COM	5.8K
LFXP6E-4TN144C	100	1.2V	-4	TQFP	144	COM	5.8K
LFXP6E-5TN144C	100	1.2V	-5	TQFP	144	COM	5.8K

Part Number	I/Os	Voltage	Grade	Package	Pins	Temp.	LUTs
LFXP10E-3FN388C	244	1.2V	-3	fpBGA	388	COM	9.7K
LFXP10E-4FN388C	244	1.2V	-4	fpBGA	388	COM	9.7K
LFXP10E-5FN388C	244	1.2V	-5	fpBGA	388	COM	9.7K
LFXP10E-3FN256C	188	1.2V	-3	fpBGA	256	COM	9.7K
LFXP10E-4FN256C	188	1.2V	-4	fpBGA	256	COM	9.7K
LFXP10E-5FN256C	188	1.2V	-5	fpBGA	256	COM	9.7K

Petitioners
Ex. 1067, p. 5-9

Commercial (Cont.)

Part Number	I/Os	Voltage	Grade	Package	Pins	Temp.	LUTs
LFXP15E-3FN484C	300	1.2V	-3	fpBGA	484	COM	15.5K
LFXP15E-4FN484C	300	1.2V	-4	fpBGA	484	COM	15.5K
LFXP15E-5FN484C	300	1.2V	-5	fpBGA	484	COM	15.5K
LFXP15E-3FN388C	268	1.2V	-3	fpBGA	388	COM	15.5K
LFXP15E-4FN388C	268	1.2V	-4	fpBGA	388	COM	15.5K
LFXP15E-5FN388C	268	1.2V	-5	fpBGA	388	COM	15.5K
LFXP15E-3FN256C	188	1.2V	-3	fpBGA	256	COM	15.5K
LFXP15E-4FN256C	188	1.2V	-4	fpBGA	256	COM	15.5K
LFXP15E-5FN256C	188	1.2V	-5	fpBGA	256	COM	15.5K

Part Number	I/Os	Voltage	Grade	Package	Pins	Temp.	LUTs
LFXP20E-3FN484C	340	1.2V	-3	fpBGA	484	COM	19.7K
LFXP20E-4FN484C	340	1.2V	-4	fpBGA	484	COM	19.7K
LFXP20E-5FN484C	340	1.2V	-5	fpBGA	484	COM	19.7K
LFXP20E-3FN388C	268	1.2V	-3	fpBGA	388	COM	19.7K
LFXP20E-4FN388C	268	1.2V	-4	fpBGA	388	COM	19.7K
LFXP20E-5FN388C	268	1.2V	-5	fpBGA	388	COM	19.7K
LFXP20E-3FN256C	188	1.2V	-3	fpBGA	256	COM	19.7K
LFXP20E-4FN256C	188	1.2V	-4	fpBGA	256	COM	19.7K
LFXP20E-5FN256C	188	1.2V	-5	fpBGA	256	COM	19.7K

Industrial

Part Number	I/Os	Voltage	Grade	Package	Pins	Temp.	LUTs
LFXP3C-3QN208I	136	1.8/2.5/3.3V	-3	PQFP	208	IND	3.1K
LFXP3C-4QN208I	136	1.8/2.5/3.3V	-4	PQFP	208	IND	3.1K
LFXP3C-3TN144I	100	1.8/2.5/3.3V	-3	TQFP	144	IND	3.1K
LFXP3C-4TN144I	100	1.8/2.5/3.3V	-4	TQFP	144	IND	3.1K
LFXP3C-3TN100I	62	1.8/2.5/3.3V	-3	TQFP	100	IND	3.1K
LFXP3C-4TN100I	62	1.8/2.5/3.3V	-4	TQFP	100	IND	3.1K

Part Number	I/Os	Voltage	Grade	Package	Pins	Temp.	LUTs
LFXP6C-3FN256I	188	1.8/2.5/3.3V	-3	fpBGA	256	IND	5.8K
LFXP6C-4FN256I	188	1.8/2.5/3.3V	-4	fpBGA	256	IND	5.8K
LFXP6C-3QN208I	142	1.8/2.5/3.3V	-3	PQFP	208	IND	5.8K
LFXP6C-4QN208I	142	1.8/2.5/3.3V	-4	PQFP	208	IND	5.8K
LFXP6C-3TN144I	100	1.8/2.5/3.3V	-3	TQFP	144	IND	5.8K
LFXP6C-4TN144I	100	1.8/2.5/3.3V	-4	TQFP	144	IND	5.8K

Petitioners
Ex. 1067, p. 5-10

Industrial (Cont.)

Part Number	I/Os	Voltage	Grade	Package	Pins	Temp.	LUTs
LFXP10C-3FN388I	244	1.8/2.5/3.3V	-3	fpBGA	388	IND	9.7K
LFXP10C-4FN388I	244	1.8/2.5/3.3V	-4	fpBGA	388	IND	9.7K
LFXP10C-3FN256I	188	1.8/2.5/3.3V	-3	fpBGA	256	IND	9.7K
LFXP10C-4FN256I	188	1.8/2.5/3.3V	-4	fpBGA	256	IND	9.7K

Part Number	I/Os	Voltage	Grade	Package	Pins	Temp.	LUTs
LFXP15C-3FN484I	300	1.8/2.5/3.3V	-3	fpBGA	484	IND	15.5K
LFXP15C-4FN484I	300	1.8/2.5/3.3V	-4	fpBGA	484	IND	15.5K
LFXP15C-3FN388I	268	1.8/2.5/3.3V	-3	fpBGA	388	IND	15.5K
LFXP15C-4FN388I	268	1.8/2.5/3.3V	-4	fpBGA	388	IND	15.5K
LFXP15C-3FN256I	188	1.8/2.5/3.3V	-3	fpBGA	256	IND	15.5K
LFXP15C-4FN256I	188	1.8/2.5/3.3V	-4	fpBGA	256	IND	15.5K

Part Number	I/Os	Voltage	Grade	Package	Pins	Temp.	LUTs
LFXP20C-3FN484I	340	1.8/2.5/3.3V	-3	fpBGA	484	IND	19.7K
LFXP20C-4FN484I	340	1.8/2.5/3.3V	-4	fpBGA	484	IND	19.7K
LFXP20C-3FN388I	268	1.8/2.5/3.3V	-3	fpBGA	388	IND	19.7K
LFXP20C-4FN388I	268	1.8/2.5/3.3V	-4	fpBGA	388	IND	19.7K
LFXP20C-3FN256I	188	1.8/2.5/3.3V	-3	fpBGA	256	IND	19.7K
LFXP20C-4FN256I	188	1.8/2.5/3.3V	-4	fpBGA	256	IND	19.7K

Part Number	I/Os	Voltage	Grade	Package	Pins	Temp.	LUTs
LFXP3E-3QN208I	136	1.2V	-3	PQFP	208	IND	3.1K
LFXP3E-4QN208I	136	1.2V	-4	PQFP	208	IND	3.1K
LFXP3E-3TN144I	100	1.2V	-3	TQFP	144	IND	3.1K
LFXP3E-4TN144I	100	1.2V	-4	TQFP	144	IND	3.1K
LFXP3E-3TN100I	62	1.2V	-3	TQFP	100	IND	3.1K
LFXP3E-4TN100I	62	1.2V	-4	TQFP	100	IND	3.1K

Part Number	I/Os	Voltage	Grade	Package	Pins	Temp.	LUTs
LFXP6E-3FN256I	188	1.2V	-3	fpBGA	256	IND	5.8K
LFXP6E-4FN256I	188	1.2V	-4	fpBGA	256	IND	5.8K
LFXP6E-3QN208I	142	1.2V	-3	PQFP	208	IND	5.8K
LFXP6E-4QN208I	142	1.2V	-4	PQFP	208	IND	5.8K
LFXP6E-3TN144I	100	1.2V	-3	TQFP	144	IND	5.8K
LFXP6E-4TN144I	100	1.2V	-4	TQFP	144	IND	5.8K

Petitioners
Ex. 1067, p. 5-11

Industrial (Cont.)

Part Number	I/Os	Voltage	Grade	Package	Pins	Temp.	LUTs
LFXP10E-3FN388I	244	1.2V	-3	fpBGA	388	IND	9.7K
LFXP10E-4FN388I	244	1.2V	-4	fpBGA	388	IND	9.7K
LFXP10E-3FN256I	188	1.2V	-3	fpBGA	256	IND	9.7K
LFXP10E-4FN256I	188	1.2V	-4	fpBGA	256	IND	9.7K

Part Number	I/Os	Voltage	Grade	Package	Pins	Temp.	LUTs
LFXP15E-3FN484I	300	1.2V	-3	fpBGA	484	IND	15.5K
LFXP15E-4FN484I	300	1.2V	-4	fpBGA	484	IND	15.5K
LFXP15E-3FN388I	268	1.2V	-3	fpBGA	388	IND	15.5K
LFXP15E-4FN388I	268	1.2V	-4	fpBGA	388	IND	15.5K
LFXP15E-3FN256I	188	1.2V	-3	fpBGA	256	IND	15.5K
LFXP15E-4FN256I	188	1.2V	-4	fpBGA	256	IND	15.5K

Part Number	I/Os	Voltage	Grade	Package	Pins	Temp.	LUTs
LFXP20E-3FN484I	340	1.2V	-3	fpBGA	484	IND	19.7K
LFXP20E-4FN484I	340	1.2V	-4	fpBGA	484	IND	19.7K
LFXP20E-3FN388I	268	1.2V	-3	fpBGA	388	IND	19.7K
LFXP20E-4FN388I	268	1.2V	-4	fpBGA	388	IND	19.7K
LFXP20E-3FN256I	188	1.2V	-3	fpBGA	256	IND	19.7K
LFXP20E-4FN256I	188	1.2V	-4	fpBGA	256	IND	19.7K

Petitioners
Ex. 1067, p. 5-12

For Further Information

A variety of technical notes for the LatticeXP family are available on the Lattice web site at www.latticesemi.com.

- *LatticeECP/EC and LatticeXP sysIO Usage Guide* (TN1056)
- *Lattice ispTRACY Usage Guide* (TN1054)
- *LatticeECP/EC and LatticeXP sysCLOCK PLL Design and Usage Guide* (TN1049)
- *Memory Usage Guide for LatticeECP/EC and LatticeXP Devices* (TN1051)
- *LatticeECP/EC and XP DDR Usage Guide* (TN1050)
- *Estimating Power Using Power Calculator for LatticeECP/EC and LatticeXP Devices* (TN1052)
- *LatticeXP sysCONFIG Usage Guide* (TN1082)

For further information on interface standards refer to the following web sites:

- JEDEC Standards (LVTTL, LVCMOS, SSTL, HSTL): www.jedec.org
- PCI: www.pcisig.com

© 2005 Lattice Semiconductor Corp. All Lattice trademarks, registered trademarks, patents, and disclaimers are as listed at www.latticesemi.com/legal. All other brand or product names are trademarks or registered trademarks of their respective holders. The specifications and information herein are subject to change without notice.

Petitioners
Ex. 1067, p. 6-1