IN THE UNITED STATES DISTRICT COURT
FOR THE DISTRICT OF DELAWARE

SAMSUNG ELECTRONICS CO., LTD. AND SAMSUNG SEMICONDUCTOR, INC.,	)	
Plaintiffs,	)	C.A. No. _____
v.	)	
	)	**DEMAND FOR JURY TRIAL**
NETLIST, INC.,	)	
Defendant.	)	

COMPLAINT FOR DECLARATORY JUDGMENT OF NON-INFRINGEMENT AND UNENFORCEABILITY; BREACH OF CONTRACT

Plaintiffs Samsung Electronics Co., Ltd. and Samsung Semiconductor, Inc. (collectively, "Samsung") seek a declaration that Samsung does not directly or indirectly infringe United States Patent Nos. 10,217,523 (the "'523 patent"), 10,474,595 (the "'595 patent"), 9,858,218 (the "'218 patent"), and 7,619,912 (the "'912 patent") (collectively, the "Patents-in-Suit") (Exhibits A-D), either literally or under the doctrine of equivalents; a declaration that the Patents-in-Suit are unenforceable due to inequitable conduct and unclean hands; and a ruling that Defendant Netlist, Inc. ("Netlist") has breached contractual obligations owed to Samsung, including obligations to license its allegedly essential patents to Samsung and its affiliates on reasonable and non-discriminatory ("RAND") terms and conditions, as follows:

NATURE OF THE ACTION

1. This is an action for a declaratory judgment and breach of contract arising under the patent laws of the United States, Title 35 of the United States Code, the Declaratory Judgment Act, 28 U.S.C. § 2201 *et seq.*, and state contract law.

2. Samsung requests this relief because Netlist has, without justification, unilaterally attempted to terminate a November 2015 Joint Development and License Agreement ("Agreement") in which Netlist granted Samsung a perpetual, paid-up, worldwide license to, among others, the Patents-in-Suit. Samsung believes that it is licensed to the Patents-in-Suit under the Agreement. Netlist, however, claims it has terminated the Agreement, and Netlist asserts that Samsung infringes the Patents-in-Suit, including in ongoing litigation against a user of Samsung products and in license demands made to Samsung. Thus, Samsung seeks a declaration that it does not infringe the Patents-in-Suit and that the Patents-in-Suit are unenforceable. In the alternative, Netlist has breached its commitment to license on RAND terms and conditions, as Netlist insists the Patents-in-Suit are necessarily infringed by the practice of certain standards promulgated by the Joint Electron Device Engineering Council ("JEDEC") and implemented by the accused Samsung memory modules.

3. Accordingly, for the reasons set forth herein, Samsung seeks a declaratory judgment that it does not infringe the Patents-in-Suit, a declaratory judgment that the Patents-in-Suit are unenforceable due to inequitable conduct and unclean hands, and relief for Netlist's breaches of contractual obligations owed to Samsung, including obligations to license its allegedly essential patents to Samsung and its affiliates on RAND terms and conditions.

THE PARTIES

4. Samsung Electronics Co., Ltd. ("SEC") is a corporation organized and existing under the laws of the Republic of Korea, with its principal place of business at 129, Samsung-ro, Yeongtong-gu, Suwon-si, Gyeonggi-do, 443-742, Republic of Korea.

5. Samsung Semiconductor, Inc. ("SSI") is a corporation organized and existing under the laws of the State of California, with its principal place of business at 3655 North First Street, San Jose, California 95134.

6. On information and belief, Netlist is a corporation organized and existing under the laws of the State of Delaware, with its principal place of business at 175 Technology Drive, Suite 150, Irvine, California 92618.

JURISDICTION AND VENUE

7. This Court has subject matter jurisdiction over the claims for declaratory judgments of non-infringement and unenforceability (Counts I–VII) under 28 U.S.C. §§ 1331, 1338(a), and 2201(a).

8. This Court has subject matter jurisdiction over the breach of contract claim (Count VIII) pursuant to 28 U.S.C. § 1367. The breach of contract claim forms part of the same case or controversy as the claims for declaratory judgment of non-infringement and unenforceability asserted by Samsung in this action.

9. This Court has personal jurisdiction over Netlist, a corporation organized and existing under the laws of the State of Delaware.

10. Venue is proper in this District under 28 U.S.C. § 1391(b)-(c) because Netlist is subject to personal jurisdiction in this District.

11. An immediate, real, and justiciable controversy exists between Samsung and Netlist as to whether Samsung has infringed the Patents-in-Suit and whether the Patents-in-Suit are unenforceable. For example, and as discussed more fully below, shortly after Netlist unilaterally declared that Samsung was no longer licensed to Netlist's patent portfolio, Netlist issued a "Notice of Infringement" letter to SEC and SSI, in which Netlist asserted that certain

Samsung memory modules infringe Netlist's patents, including the '523, '595, and '218 patents. Netlist previously asserted these same patents in litigation against SK hynix, and in doing so served claim charts that purport to demonstrate infringement based on compliance with certain JEDEC memory standards. The Samsung memory modules at issue in this action implement those same standards. In addition, in an ongoing patent infringement lawsuit against Google, Netlist recently amended its infringement contentions to allege that Google's servers (which include Samsung's standard-compliant memory modules) infringe the '912 patent. As a direct and proximate result of Netlist's patent enforcement activities with respect to the '912 patent, Samsung has received demands for indemnification, including from Google and Lenovo. Furthermore, between May 2020 and the present, Netlist made demands that Samsung take a second license to Netlist's portfolio of patents. Accordingly, as set forth herein, Netlist has engaged in affirmative acts related to the enforcement of the Patents-in-Suit against specific Samsung products currently being sold and used throughout the United States. Because this action presents an actual controversy with respect to the Patents-in-Suit, the Court may grant the declaratory relief sought pursuant to 28 U.S.C. § 2201 *et seq*.

BACKGROUND

A. Netlist's Extraordinary License Demand and Infringement Claims

12. On November 12, 2015, Netlist and SEC entered into a Joint Development and License Agreement (the "Agreement"). The Agreement contains cross-license, joint development, and product supply provisions.

13. In the Agreement, Netlist granted SEC and its subsidiaries, including SSI, a perpetual, paid-up, worldwide, non-exclusive license to all patents owned or controlled by Netlist

or any of its subsidiaries having an effective first filing date on or prior to November 12, 2020. The license extends through the expiration of the last to expire of the licensed patents.

14. SEC similarly granted Netlist and its subsidiaries a perpetual, paid-up, worldwide, non-exclusive license to all patents owned or controlled by SEC or any of its subsidiaries having an effective first filing date on or prior to November 12, 2020.

15. The Agreement required SEC to make a payment to Netlist of $8 million. SEC made this payment in accordance with the terms of the Agreement.

16. Netlist is now taking extraordinary actions to back out of its grant of a patent license to Samsung.

17. On May 27, 2020, Netlist's Chief Licensing Officer, Marc J. Frechette, wrote to Mr. Seung Min Sung of SEC, and alleged that Samsung materially breached the Agreement by "repeatedly fail[ing] to fulfill Netlist's request for NAND and DRAM products throughout the term of the Agreement" and, allegedly, by improperly deducting withholding taxes. In the same letter—which was the first time Netlist raised its breach allegations—Mr. Frechette informed Mr. Sung that Netlist had filed a complaint in U.S. District Court for the Central District of California with respect to the alleged breach by Samsung and provided a copy of the complaint for reference.

18. On May 28, 2020, the U.S. District Court for the Central District of California docketed Netlist's breach of contract complaint against SEC. *Netlist Inc. v. Samsung Electronics Co., Ltd.*, No. 8:20-cv-00993-MCS (C.D. Cal.) ("Breach Action").

19. Netlist next wrote to SEC to terminate the Agreement, including the patent license to SEC and its subsidiaries. On July 15, 2020, Netlist's Chief Licensing Officer, Marc J.

Frechette, wrote to Mr. Seung Min Sung of SEC and stated that "Netlist is hereby terminating, effective immediately, the Agreement including the patent license granted to Samsung . . . ."

20. One week later, on July 22, 2020, Netlist amended its complaint in the Breach Action, seeking a declaration that the license it granted Samsung, *but not the license Samsung granted Netlist*, is terminated. In the Breach Action, Netlist seeks monetary damages and a declaration "that Netlist has terminated the Agreement pursuant to Section 13.2 and that Samsung's licenses and rights under the agreement have ceased."

21. Netlist then issued a "Notice of Infringement" to Samsung and a demand that Samsung take a second license to Netlist's patents.

22. Specifically, on October 15, 2020, Netlist's outside counsel in the Breach Action wrote to SEC's outside counsel in the Breach Action and to the General Counsel of SSI, copying Netlist's Chief Licensing Officer, Marc J. Frechette, providing notice of Samsung's alleged infringement of Netlist's portfolio of patents. Netlist stated that because it had terminated the Agreement, "Samsung is no longer licensed to any of Netlist's portfolio of patents." Netlist further asserted that its patents relate to Load Reduced Dual In-Line Memory Modules ("LRDIMMs") and/or Registered Dual In-Line Memory Modules ("RDIMMs"). Netlist then alleged: "Despite the termination of the Joint Development and License Agreement, Samsung continues to unlawfully utilize Netlist's innovations and to infringe Netlist's patents, including United States Patent Nos. 10, 217,523, 10,474,595, and 9,858,218." Netlist concluded the letter by demanding that "Samsung and its subsidiaries honor third-party intellectual property rights" and engage in "formal licensing discussions." Netlist further stated that it "reserves all rights and remedies" with respect to the alleged infringement.

23. Netlist resumed its communications with Samsung in 2021. On February 2, 2021, Netlist's Chief Licensing Counsel, Mr. Marc J. Frechette, indicated by email that Samsung must take a *second* license, coupled with the demand that Netlist "be made whole" for any alleged breach asserted in the Breach Action.

24. Accordingly, Netlist seeks to double-dip, with a demand that Samsung take a second license to Netlist's patents.

25. On June 18, 2021, Netlist accused Google of infringing the '912 patent (at issue here and licensed to Samsung through the Agreement) based on Google's use of DDR4 LRDIMM and RDIMM memory modules supplied by SSI in Google's computer systems and servers. Specifically, Netlist amended its infringement contentions in *Netlist, Inc. v. Google Inc.*, No. 09-cv-05718 (N.D. Cal.) ("Google Infringement Action") to include the contention that DDR4 LRDIMM and RDIMM memory modules infringe claim 16 of the '912 patent.

26. Netlist also seeks an injunction in the Google Infringement Action, which would preclude Google from using the JEDEC-compliant LRDIMM and RDIMM memory modules supplied by SSI to Google.

27. On July 6, 2021, Google made an indemnification request to SSI in connection with Netlist's assertion in the Google Infringement Action of the '912 patent against Google's use of Samsung's DDR4 LRDIMM and RDIMM memory modules.

28. On July 19, 2021, Lenovo made an indemnification request to SSI in connection with Netlist's assertion in the Google Infringement Action of claim 16 of the '912 patent against Google's use of Lenovo's "Octopod" servers, which contain Samsung's DDR4 LRDIMM and RDIMM memory modules.

B. Netlist Patents and Standard Essential Allegations

29. Netlist asserts that the Patents-in-Suit are essential to one or more of JEDEC standards JESD79-4C, JESD82-31, JEDEC82-31A, and JESD82-32 ("the DDR4 Standards"), which were developed by the JEDEC JC-40 committee (JESD82-31 and JESD82-32), JC-40.4 committee (JESD82-31A), and JC-42.3C committee (JESD79-4C).

30. Netlist contends that the '523, '595, and '218 patents are essential to one or more of the DDR4 Standards. In its October 15, 2020 "Notice of Infringement" letter, Netlist asserts that it owns "over 100 patents and patent applications related to memory technologies," including LRDIMM and RDIMM, and accuses Samsung of infringing these three patents. Furthermore, Netlist contended that each of these patents is essential to certain DDR4 Standards in previous litigation against SK hynix. *See Netlist, Inc. v. SK hynix Inc.*, No. 6:20-cv-00194 (W.D. Texas), D.I. 1 ¶¶ 27, 37, D.I. 1-5 ('218 Claim Chart for DDR4 LRDIMM), D.I. 1-6 ('218 Claim Chart for DDR4 RDIMM), D.I. 1-10 ('595 Claim Chart for DDR4 LRDIMM), D.I. 1-11 ('595 Claim Chart for DDR4 RDIMM); *Netlist, Inc. v. SK hynix Inc.*, No. 6:20-cv-00525 (W.D. Texas), D.I. 1 ¶ 27, D.I. 1-2 ('523 Claim Chart for DDR4 LRDIMM). In asserting the '523, '595, and '218 patents against SK hynix, Netlist's complaint included claim charts for each patent, in which Netlist mapped various claim limitations to the DDR4 Standards. *See id*.

31. Netlist contends that the '912 patent is essential to one or more of the DDR4 Standards. Specifically, in the Google Infringement Action, Netlist asserts that memory modules used by Google (which include Samsung's LRDIMM and RDIMM memory modules) infringe the '912 patent based on an implementation of the JESD79-4C standard.

32. In the present action, SEC and SSI seek declarations that Samsung's LRDIMM and RDIMM memory modules that comply with the DDR4 Standards ("Samsung

DDR4 Memory Modules") do not infringe the Patents-in-Suit. SEC and SSI also seek a declaration that the Patents-in-Suit are unenforceable due to inequitable conduct and unclean hands.

33. If, as Netlist contends, the Patents-in-Suit are essential to the DDR4 Standards (which they are not), Netlist is obligated to license the patents on RAND terms. As discussed below, Netlist has failed to offer such a license to Samsung.

C. Samsung Does Not Infringe the Patents-in-Suit and Netlist's Inequitable Conduct and Unclean Hands Renders the Claims Unenforceable

1. Overview of the '523 Patent

34. The '523 patent relates to a self-testing memory module for testing a plurality of memory devices mounted thereon. Ex. A ('523 Patent) at 5:4–27. An illustrative example is shown in FIG. 2, below.

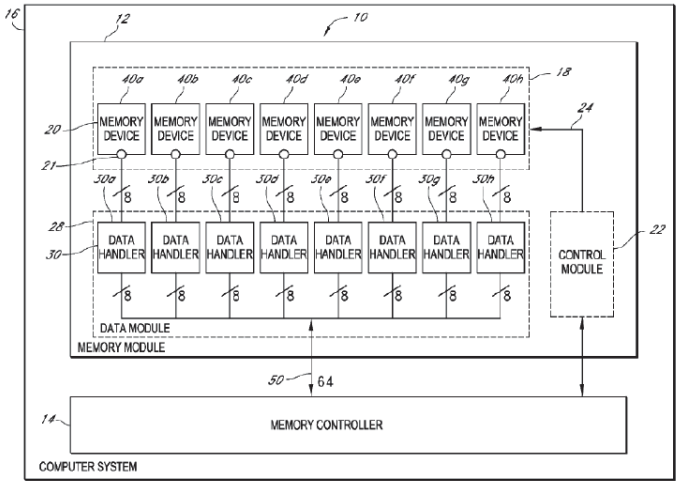

FIG. 2

35. As shown there, the memory module (12) includes a control module (22) that generates address and control signals for testing memory devices (20) and a data module (28) that includes a plurality of distributed data handlers (30) that are each located in proximity to a corresponding memory device (20) and act as a buffer between the memory device (20) and system memory controller (14). The data handlers (30) of the data module (28) generate test patterns to

write to the memory devices (20) and compare test patterns read from the memory devices (20) to the written patterns to identify faults. *Id*. at 5:28–34, 9:22–42.

36. Figure 3 provides additional detail regarding the control module, data handlers and their components and interconnections:

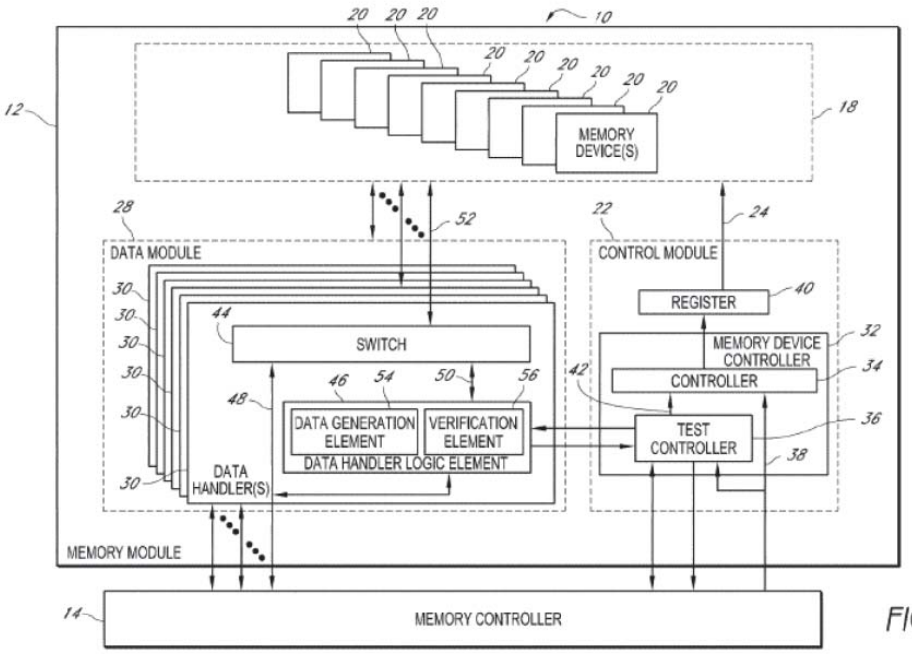

FIG. 3

37. Netlist appears to argue that the DB-to-DRAM Write Delay Training ("MWD Training"), as described in JESD82-32, practices one or more claims of the '523 patent. According to the standard, "for the DB-to-DRAM write delay training, the MDQ-MDQS delay adjustments are performed in the data buffer so that the DRAM receives the MDQ and MDQS signals with the optimal phase relationship." Ex. E (JESD82-32) at pg. 32. "[T]he data that is written to the DRAM comes from the data buffer's internal data control words that are written through the DDR4 register via the BCOM bus." *Id.* The Standard further explains:

> To perform DB-to-DRAM write training, the host will first enable the MDQ-MDQS write delay training mode in the Training Mode Control Word (BC0C) and it will also program the MPRs F5BC0x through F5BC3x and F6BC0x through F6BC3x. After that the host sends write commands to an arbitrary DRAM location without

> driving data on the host interface. The data for these write commands come from the DB MPRs.
>
> . . .
>
> To check whether the writes were successful, the host reads the data back from the same DRAM location and the data buffer performs a bit wise comparison with the data in the MPRs. If the data pattern is matched, the DQ pins are driven to "1" until the next comparison takes place or until the training mode is disabled. If the data pattern is not matched, the DQ pins are driven to "0."

Id.

38. For at least the reasons explained in Count I, the Samsung DDR4 Memory Modules do not infringe the claims of the '523 patent.

2. Overview of the '595 and '218 Patents

39. The '595 and '218 patents describe "a method of establishing a handshake mechanism based on notification signaling" that "can be implemented by adding a new interface (notifying) signal between the MCH [i.e., system memory controller] and the memory subsystem controller," Ex. B ('595 Patent) at 4:5–12, and this interface "can be an open drain signaling from the memory subsystem controller to the MCH." *Id*. at 4:12-16.

40. According to the '595 patent, "there [was] no existing method of handshaking between the MCH (*e.g.*, system memory controller) and a memory subsystem (*e.g.*, memory module) during initialization." *Id*. at 2:64–67. And "in conventional systems, the system memory controller does not monitor the error-out signal from the memory subsystem." *Id*. at 2:67-3:2. The '595 patent states that "[i]n a typical server (e.g., an Intel or AMD or other chipset based server), the lack of any handshaking between the MCH and the memory subsystem during the server initialization period has not been a serious issue since the MCH generally has complete control over the initialization procedure." *Id*. at 3:3-8.

41. Figure 1 shows a computer system including memory module 10, coupled to a memory controller 14 via "output 12," which is driven by notification circuit 20 of controller circuit 18.

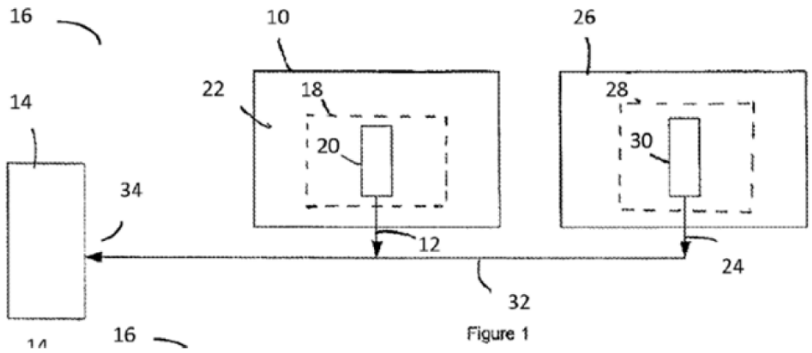

Id. at 4:24–42, FIG. 1. Memory module 26 is also shown, and has essentially the same structure as module 10, having "output 24" driven by notification circuit 30 of controller circuit 28. *Id*. at 6:23–44.

42. In one specific example of handshaking, the interface between the memory controller (MCH) and memory subsystem controller is implemented using a technique called open drain signaling. *Id*. at 4:12–16, 9:47–53, FIGs. 2–3. Specifically, output 12 of module 10 and output 24 of module 26 are both tied to the same bus 32 using an open drain configured transistor. *Id.*

43. In that configuration, when starting an initialization procedure, each memory module will drive the gate of the transistor of its open drain output high, placing a logic level low (low impedance) signal on bus 32. When the initialization is complete, the memory module can drive the gate of the transistor, placing a logic level high (high impedance) signal on bus 32. However, because all of the outputs of multiple memory modules are tied to the same bus 32 in an open drain configuration, the state of bus 32 will remain logic level low (low impedance) until each memory module drives the gate of the transistor of its open drain output low, placing a

logic level high (high impedance) on its output, which then allows "the bus 32 [to] be pulled high by the internal pull-up configuration 40 of the system memory controller 14." *Id*. at 9:47–10:50. In this manner, the system memory controller may be provided a notification signal, notifying that the module is currently executing or has completed initialization. *Id*. at 9:47–10:50.

44. Netlist appears to allege that the Clock-to-CA training, as described in JESD82-31, practices one or more claims of the '595 and '218 patents. According to the standard, "[i]n Clock-to-CA training mode the DDR4RCD01 ORs all enabled Dn inputs <u>every other cycle</u> together and loops back the result to the ALERT_n output pin." Ex. F (JESD82-31) at pg. 44 (emphasis in original). "In this mode, the DPAR input is sampled at the same time as the other Dn inputs," and "[t]he ALERT_n latency relative to the DQn inputs is the same 3 cycles as in the normal parity mode." *Id.*

45. For at least the reasons explained in Counts II and III, the Samsung DDR4 Memory Modules do not infringe the claims of the '595 and '218 patents, respectively.

3. Overview of the '912 Patent

46. The '912 patent describes memory modules that purportedly have the capability of expanding the number of memory devices that can be accessed by a computer. The '912 patent provides:

> The memory capacity of a memory module increases with the number of memory devices. The number of memory devices of a memory module can be increased by increasing the number of memory devices per rank or by increasing the number of ranks. For example, a memory module with four ranks has double the memory capacity of a memory module with two ranks and four times the memory capacity of a memory module with one rank.

Ex. D ('912 Patent) at 2:23–30.

47. A given total amount of module memory (*e.g.*, 4GB) may be provided by using a small number of high-density memory devices or a large number of low-density memory devices. The '912 patent states:

> Market pricing factors for DRAM devices are such that higher-density DRAM devices (e.g., 1Gb DRAM devices) are much more than twice the price of lower-density DRAM devices (e.g., 512 Mb DRAM devices). In other words, the price per bit ratio of the higher-density DRAM devices is greater than that of the lower density DRAM devices.

Id. at 4:59–64.

48. Figure 1A illustrates an exemplary memory module with four ranks of memory devices. The memory module 10 includes a logic element 40 and a register 60. *Id*. at 5:6–21. Input control signals, such as a row/column address signal (A_{n+1}), bank address signal (BA_o-BA_m), and chip select signals (CS_0 and CS_1), are received by logic element 40. *Id*. at 6:55–61. In response to the set of input control signals, the logic element 40 generates a set of output control signals, which includes address signals and a command signal. *Id*. at 6:61–63. Figure 1A shows a system configured for two ranks of memory per memory module (using chip select signals CS_0 and CS_1), even though the memory module 10 is arranged in four ranks of memory devices. *Id*. at 6:64–7:53. "Thus, in certain embodiments, even though the memory module 10 actually has the first number of ranks of memory devices 30, the memory module 10 simulates a virtual memory module by operating as having a second number of ranks of memory devices 30." *Id*. at 7:9–13.

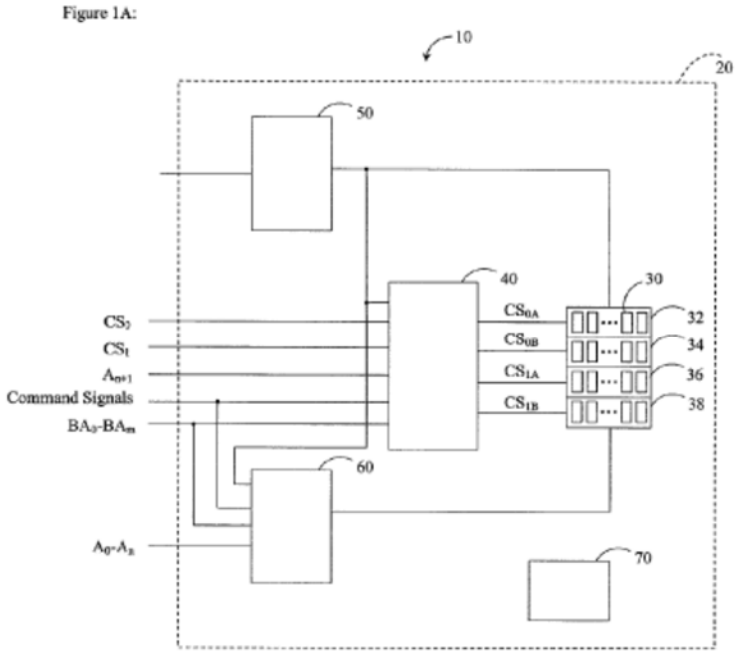

Id., FIG. 1A.

49. Netlist appears to allege that the Per DRAM Addressability ("PDA") mode, as described in JESD79-4C and JESD82-31A, practices certain limitations of claim 16 of the '912 patent. Netlist has alleged that the PDA mode allows programmability of a given device on a rank using the Mode Register Set ("MRS") function. In addition, Netlist has alleged that the Rank Multiplication Mode as described in JESD82-30 for LRDIMM DDR3 Memory Buffer (MB) Specification practices certain limitations of claims 1, 15, 28, 39, 77, 80, 82, 86, 88, and 90 of the '912 patent.

50. For at least the reasons explained in Count IV, the Samsung DDR4 Memory Modules do not infringe the '912 patent.

4. The Patents-in-Suit Are Unenforceable

51. The Patents-in-Suit also are unenforceable due to inequitable conduct and unclean hands.

52. As fully set forth in Counts V and VI, individuals substantively involved in the prosecution of the ’523, ’595, and ’218 patents knew about material and non-cumulative prior art by virtue of their participation in JEDEC standards meetings, the citation of the prior art against patents in the same family, and/or petitions for *Inter Partes* Review (“IPR”) filed by SK hynix. On information and belief, these individuals specifically intended to deceive the United States Patent and Trademark Office (“Patent Office”) into believing that the claims of the ’523, ’595, and ’218 patents were patentable by withholding the relevant art from the examiner during prosecution of the patents.

53. As fully set forth in Count VII, individuals substantively involved in the reexamination of the ’912 patent made false and misleading statements to the Patent Office and the Federal Circuit that were material to the patentability of the amended claims. On information and belief, these individuals specifically intended to deceive the Patent Office and the Federal Circuit into believing that the amendment of certain claims in the ’912 patent were “narrowing” in scope, thereby distinguishing those claims from the prior art. On information and belief, these individuals misrepresented the intended effect of the amendments in order to secure allowance of the amended claims, knowing that Netlist would later adopt the position in litigation that the amendments were in fact not “narrowing” at all, but rather recited “inherent functions” that were already required by the original claims.

D. Netlist Has Breached Contractual Obligations Owed to Samsung

1. JEDEC and Semiconductor Memory Standards

54. JEDEC is an independent, non-profit semiconductor engineering trade association and standardization body based in the United States. Over 300 companies in the computer and electronics industries are currently members of JEDEC, including Samsung and Netlist.

55. JEDEC has become the global leader in developing open standards and publications for a broad range of semiconductor technologies, including memory products. As relevant here, JEDEC develops standards for semiconductor memory chips and modules, including standards implemented by Samsung's products.

56. JEDEC's semiconductor memory standards enable interoperability, *i.e.*, the ability of memory products made by different manufacturers to work together with computer and electronic devices made by others. JEDEC standards are widely implemented, and, for many types of semiconductor memory products, it is imperative that they comply with JEDEC standards in order to be commercially viable.

57. Member companies participate in JEDEC's standard-setting process through over 50 committees and subcommittees that address various technological areas. Through a collaborative process, members contribute to and vote on technical proposals for incorporation into JEDEC standards. Upon committee and Board approval, new standards are promulgated and made available to the public.

58. In some cases, JEDEC members own patents covering the technology they or others seek to have included in a JEDEC standard. A patent that includes a claim or claims that would necessarily be infringed by the use, sale, offer for sale, or disposition of a portion of a product in order to be compliant with an industry standard is referred to as a "standard essential patent" or an "SEP."

59. Each owner of an SEP can, unless restrained, demand and obtain exorbitant royalties for the use of its patents, far in excess of the value, if any, that the patented technology would command had it not been incorporated into a standard. If unwilling to pay such excessive royalties, firms wishing to implement the standard face the risk of being foreclosed from using any

portion of the standard, including unpatented and public domain technologies. This threat of foreclosure, if left unchecked, puts a manufacturer's investment in developing standard-compliant products at risk and, in effect, permits the possibility that the SEP holder may capture up to the value of the standard as a whole for each unique implementer, rather than the true value of its specific contribution to the standard, independent of the incorporation of the technology into the standard. The exploitation of SEPs to extract unreasonable or discriminatory royalties is referred to as patent "hold-up."

60. The problem of "hold-up" is exacerbated in the context of standards, like those at issue here, as to which there are large numbers of SEPs and many different firms that claim to hold SEPs. The problem is likewise compounded when the products at issue, like those at issue here, may be required to implement multiple standards. The resulting problem of excessive aggregate royalties is referred to as "royalty stacking."

61. In order to mitigate these risks, JEDEC—like many other standard-setting organizations—has adopted a Patent Policy that seeks to ensure that owners of SEPs license those patents to manufacturers of standard-compliant products on RAND terms and conditions. Every firm that is a member of a JEDEC committee or a participant in a JEDEC committee meeting, including Netlist, agrees to abide by the JEDEC Patent Policy.

> *All Committee Members, as a condition of committee membership or committee Participation, agree to abide by JEDEC rules and procedures, including this JEDEC patent policy ("Patent Policy").*

Ex. G (JEDEC Manual No. 21T) § 8.2.2.1.

62. Pursuant to the JEDEC Patent Policy, as a condition of committee membership or participation, all JEDEC committee members agree to disclose "Potentially Essential Patents" relevant to the work of the committee:

> *All Committee Members must Disclose Potentially Essential Patents, known to their Representative(s) to be Potentially Essential Patents that are owned or controlled by that Committee Member . . . .*

Id. § 8.2.3.

63. JEDEC committee members also agree to license "Essential Patent Claims" on RAND terms and conditions:

> *All Committee Members, as a condition of committee membership or committee Participation, agree to Disclose Potentially Essential Patents, as set forth more fully in 8.2.3, and to offer to license their Essential Patent Claims to all Potential Licensees on RAND terms and conditions, if and as consistent with 8.2.3 and 8.2.4.*

Id. § 8.2.2.1.

64. The JEDEC Patent Policy defines "Potentially Essential Patent" as a patent that is reasonably believed to contain one or more Essential Patent Claims. *Id*. § 8.2.1. "Essential Patent Claim" is further defined as those "Patent claims the use of which would necessarily be infringed by the use, sale, offer for sale or other disposition of a portion of a product in order to be compliant with the required portions of a final approved JEDEC standard." *Id.*

65. The JEDEC Patent Policy provides that the disclosure of Potentially Essential Patents "shall be made as early as reasonably possible" and documented by submission to JEDEC of either a "License Assurance/Disclosure Form" or a "Notice of Refusal." *Id*. § 8.2.3.

66. A License Assurance/Disclosure Form (also known as a "Letter of Assurance" or "LOA") states that the committee member commits to license its SEPs to all potential licensees on RAND terms. On the contrary, a Notice of Refusal states that the member is not "willing to offer to license Essential Patent Claims . . . on RAND terms to all Potential Licensees." *Id*. § 8.2.3.1. In order to be effective, any such LOA or Notice of Refusal must be

delivered to the JEDEC Legal Department within thirty (30) calendar days of a draft specification's completion. *Id.*

67. Member companies who disclose and agree to license their patents on RAND terms do so via the aforementioned "LOA" identifying the relevant JEDEC standard(s) and making one of the two following commitments specified by the JEDEC Patent Policy:

> *For any Essential Patent Claims held or controlled by the entity, pending or participated to be filed, which are or may be required to implement a Standard that may result from the JEDEC Standard Activity, the entity hereby makes one of the following commitments:*
>
> *(i) A license will be offered, without compensation, under reasonable terms and conditions that are free of any unfair discrimination to applicants desiring to utilize the license for the purpose of implementing the JEDEC Standard, subject to the terms and conditions in 8.2.4; or*
>
> *(ii) A license will be offered, to applicants desiring to utilize the license for the purpose of implementing the JEDEC Standard under reasonable terms and conditions that are free of any unfair discrimination, subject to the terms and conditions in 8.2.4.*

Id. § 8.2.5.

68. According to JEDEC's Patent Policy, disclosures and commitments with respect to one patent are deemed to include all patents claiming priority to the same filing. *Id*. § 8.2.1. Committee members are therefore obligated to license on RAND terms later-issuing SEPs that claim priority to patents disclosed to JEDEC.

69. If a committee member who owns or controls patents essential (or potentially essential) to JEDEC standards does not disclose and agree to license them before the ballot closes, or notify the committee of an intention not to license through a "Notice of Refusal," the committee member will be deemed to have agreed to offer licenses on RAND terms:

> *If a Committee Member, at its discretion, elects not to submit a License Assurance/Disclosure Form (see Annex A.3) at or before*

> *the time the ballot closes and does not otherwise provide notice of an unwillingness to license in accordance with 8.2.3.1, the Committee Member and its Affiliates will be deemed to have agreed to offer to grant licenses on RAND terms and conditions for all of its Essential Patent Claims of the balloted Standard, if and as consistent with 8.2.4.*

Id. § 8.2.5.

70. The JEDEC Patent Policy provides that it is to be interpreted and governed under the laws of the State of New York. *Id*. § 8.2.10. Although the JEDEC Manual 21 has been updated and amended from time to time, upon information and belief, all of the relevant provisions of the JEDEC Patent Policy have been materially the same at all times relevant hereto.

2. Netlist's RAND Commitments

71. Netlist alleges that it owns over 100 patents and patent applications related to memory technologies.

72. Netlist is also a member of JEDEC and has participated in a number of JEDEC technical committees over time. Upon information and belief, at the time that the DDR4 Standards—*i.e.*, the relevant standards relating to RDIMM and LRDIMM technology—were drafted and approved by JEDEC, Netlist was a member or attended the meetings of the JC40 committee that developed those standards.

73. To date, and on information and belief, Netlist has disclosed that at least 42 of its patents are essential or potentially essential to JEDEC standards.

74. Netlist committed to license the '523 patent on RAND terms to implementers of certain DDR4 Standards. Upon information and belief, Netlist submitted a Letter of Assurance for U.S. Patent No. 8,001,434 ("the '434 patent") on April 7, 2016, related to JEDEC committee JC40 and DDR4 LRDIMM components. Ex. H ('434 LOA). The '523 patent is a

continuation of the ’434 patent. Therefore, under the JEDEC Patent Policy, the commitments in the ’434 Letter of Assurance extend to the ’523 patent. Ex. G (JEDEC Manual No. 21T) § 8.2.1.

75. Netlist also committed to license the ’595 and ’218 patents on RAND terms to implementers of certain DDR4 Standards. Upon information and belief, Netlist submitted a Letter of Assurance for U.S. Patent No. 8,489,837 (“the ’837 patent”) on April 7, 2016, related to JEDEC committee JC40 and DDR4 LRDIMM and RDIMM components. Ex. I (’837 LOA). The ’595 and ’218 patents are continuations of the ’837 patent. Therefore, under the JEDEC Patent Policy, the commitments in the ’837 Letter of Assurance extend to the ’595 and ’218 patents. Ex. G (JEDEC Manual No. 21T) § 8.2.1.

76. Netlist is also obligated to license the ’912 patent on RAND terms to implementers of certain DDR4 Standards. Upon information and belief, Netlist wrote a letter to JEDEC on April 1, 2010, disclosing the ’912 patent in connection with the JC40 and JC42 committees. Ex. J (’912 Letter). Netlist submitted a Letter of Assurance on November 22, 2010 related to DDR2 and DDR3 technology, Ex. K (’912 LOA), but withdrew that commitment on December 6, 2010, when Netlist submitted a Notice of Refusal, Ex. L (’912 Refusal). Netlist withdrew its Notice of Refusal for the ’912 patent nine months later, on September 7, 2011. Ex. M (’912 LOA II).

77. Upon information and belief, Netlist never specifically disclosed the ’912 patent in connection with any of the DDR4 Standards. Netlist has alleged that a DDR4 memory module operating in PDA mode, in compliance with certain DDR4 Standards, infringes claim 16 of the ’912 patent. Netlist also acknowledges that PDA mode was not part of the earlier DDR standards and was introduced in connection with the DDR4 Standards. Upon information and belief, despite the differences between DDR4 and earlier DDR standards, Netlist never disclosed

the ’912 patent to JEDEC with respect to the standards that define PDA mode. Netlist only disclosed related patents—U.S. Patent Nos. 8,081,535 and 8,081,537—to the JC-40 and JC-42 committees in relation to DDR4. Ex. T (’535 and ’537 LOAs).

78. Moreover, the DDR4 standards were first published in 2014, so Netlist had seven years in which to notify the industry that the ’912 patent was allegedly essential to certain DDR4 Standards. Although, on information and belief, Netlist neglected to specifically disclose the ’912 patent in connection with the DDR4 Standards defining PDA mode throughout this time period, Netlist amended its infringement contentions in 2021 in the Google Infringement Action to assert that claim 16 of the ’912 patent is essential to those standards.

79. The commitments that Netlist has made to license its SEPs on RAND terms constitute binding contractual obligations that may be enforced by firms seeking to implement the JEDEC standards, such as Samsung.

3. Netlist’s Failure to Comply with Its RAND Obligations

80. Although Netlist accepted the benefits of its membership in JEDEC in order to induce JEDEC to incorporate technologies over which Netlist claims to have patents into JEDEC standards, Netlist has failed to fulfill its corresponding contractual commitments. Despite voluntarily undertaking the obligation to license its alleged SEPs on RAND terms, Netlist has made licensing demands of Samsung that violate its RAND commitment.

81. For instance, by email dated February 2, 2021, Netlist demanded that Samsung enter a second license to patents that Samsung previously licensed from Netlist, coupled with a demand to “be made whole” for any alleged breach under the Agreement. Specifically, Netlist stated that “Samsung will require a new license to our patent portfolio” and requested “[d]amages that Netlist has incurred as a result of Samsung’s material decrease of product supply to Netlist following Q1 2017 and how Netlist might be made whole.” Further, in the Google

Infringement Action, Netlist has brought suit against Google based on Google's use of Samsung DDR4 Memory Modules, and Netlist seeks to enjoin Google from using those modules. Such an injunction request violates Netlist's commitment to license its alleged SEPs on RAND terms and conditions.

82. Accordingly, and as discussed elsewhere herein, Netlist has breached its obligations under the JEDEC Patent Policy.

COUNT I
(Declaration of Non-Infringement of the '523 Patent)

83. Samsung restates and incorporates by reference the preceding paragraphs as if fully set forth herein.

84. The Patent Office issued the '523 patent, titled "Multi-Mode Memory Module," on February 26, 2019. On information and belief, Netlist claims to own all rights, title, and interest in the '523 patent. A true and correct copy of the '523 patent is attached hereto as Exhibit A.

85. The '523 patent has two independent claims: 1 and 19. For example, claim 1 reads as follows:

Element	Claim Language
preamble	A memory module accessible in a computer system by a system memory controller via a system memory bus, comprising:
(a)	memory devices mounted on a circuit board, the memory devices having address and control ports and data ports;
(b)	a data module mounted on the circuit board and coupled between the data ports of the memory devices and the system memory bus, the data module including data handler logic elements; and
(c)	a control module mounted on the circuit board and coupled to the data module, the address and control ports of the memory devices, and the system memory bus; and

Element	Claim Language
(d)	wherein the memory module is operable in any of a plurality of modes including a first mode and a second mode;
(e)	wherein the control module in the first mode is configured to receive system address and control signals from the system memory controller and to output first memory address and control signals to the memory devices according to the system address and control signals, and the data module in the first mode is configured to propagate one or more first data signals between the memory devices and the system memory controller, the one or more first data signals being transmitted or received by at least a portion of the memory devices in response to the first memory address and control signals; and
(f)	wherein the control module in the second mode is configured to output second memory address and control signals to the address and control ports of the memory devices, and the data module in the second mode is configured to isolate the memory devices from being accessed by the system memory controller and to transmit one or more second data signals including data patterns provided by the data handler logic elements to the data ports of the memory devices according to one or more commands output from the control module, and wherein at least a portion of the memory devices are configured to receive the one or more second data signals according to the second memory address and control signals from the control module.

86. Netlist has alleged and continues to allege that Samsung infringes one or more claims of the ’523 patent, and that Samsung’s license to the ’523 patent was terminated as of July 20, 2020.

87. Samsung is not liable for infringement of the ’523 patent either before or after the alleged termination of the license. Under the Agreement, Samsung is licensed to, *inter alia*, make, use, sell, offer for sale, and import the Samsung DDR4 Memory Modules allegedly practicing the ’523 patent. Although the parties dispute whether the license was terminated, neither Samsung nor its customers or end users can be liable for infringement of the ’523 patent based on Samsung DDR4 Memory Modules made, used, sold, offered for sale, or imported before an effective termination of the license. Moreover, Samsung has not directly or indirectly infringed any claim of the ’523 patent, either literally or under the doctrine of equivalents, at least because

the Samsung DDR4 Memory Modules do not employ, incorporate, or otherwise make use of all of the limitations of the claims of the ’523 patent.

88. For example, claim 1 requires a “data module” that includes “data handler logic elements.” Similarly, claim 19 requires “data handlers” that include a “data handler logic element.” Thus, all of the claims of the ’523 patent require a “data module” or a “data handler” that includes a “data handler logic element.” Netlist appears to allege that LRDIMM data buffers are “data modules” or “data handlers.” Samsung’s RDIMM products do not include any accused data buffers. The accused LRDIMM data buffers are not “data modules” or “data handlers” that include a “data handler logic element” at least because they do not include circuitry for generating data as required by the claims of the ’523 patent.

89. As another example, claims 1 and 19 require “a first mode and a second mode.” Netlist appears to allege that the MWD Training in Samsung’s LRDIMM products is the alleged “second mode.” However, the accused MWD Training is a training and not a “second mode” as required by the claims.

90. The Samsung DDR4 Memory Modules do not infringe any of claims 2–18 and 20–34 at least because these claims depend directly or indirectly from claims 1 or 19.

91. A substantial, immediate, and real controversy exists between Samsung and Netlist regarding whether Samsung or its customers or end users infringe the ’523 patent by making, using, selling, and/or offering for sale the Samsung DDR4 Memory Modules in the United States, or by importing the Samsung DDR4 Memory Modules into the United States. A judicial declaration is necessary to determine the parties’ respective rights regarding the ’523 patent.

92. Samsung seeks a judgment declaring that Samsung and its customers and end-users do not infringe the ’523 patent, either literally or under the doctrine of equivalents, by

making, using, selling, and/or offering for sale the Samsung DDR4 Memory Modules in the United States, or by importing the Samsung DDR4 Memory Modules into the United States, either directly under 35 U.S.C. § 271(a) or indirectly under 35 U.S.C. § 271(b)–(c).

COUNT II
(Declaration of Non-Infringement of the '595 Patent)

93. Samsung restates and incorporates by reference the preceding paragraphs as if fully set forth herein.

94. The Patent Office issued the '595 patent, titled "Memory Module Having An Open-Drain Output Pin For Parity Error In A First Mode And For Training Sequences In A Second Mode," on November 12, 2019. On information and belief, Netlist claims to own all rights, title, and interest in the '595 patent. A true and correct copy of the '595 patent is attached hereto as Exhibit B.

95. The '595 patent has four independent claims: 1, 10, 17, and 21. For example, claim 1 reads as follows:

Element	Claim Language
preamble	A memory module operable with a memory controller of a host system, comprising:
(a)	a printed circuit board having edge connections that fit into a corresponding slot of the host system so as to be in electrical communication with the memory controller, the edge connections including first edge connections via which the memory module receives or outputs data signals, second edge connections via which the memory module receives address and control signals, and an error edge connection in addition to the first edge connections and the second edge connections;
(b)	dynamic random access memory elements on the printed circuit board;
(c)	a module controller on the printed circuit board and coupled to the dynamic random access memory elements, the module controller having an open drain output coupled to the error edge connection; and

Element	Claim Language
(d)	wherein the memory module is configurable to operate in any of at least a first mode and a second mode;
(e)	wherein the memory module in the first mode is configurable to perform one or more normal memory read or write operations by communicating data signals via the first edge connections in response to address and control signals received via the second edge connections, wherein the memory module in the second mode is not accessed by the memory controller for normal memory read or write operations, and wherein the memory module in the second mode is configurable to perform operations related to one or more training sequences;
(f)	wherein the module controller is configurable to receive via the second edge connections the address and control signals associated with the one or more normal memory read or write operations, wherein the dynamic random access memory elements are configurable to communicate data signals with the memory controller via the first edge connections in accordance with the address and control signals, and wherein the module controller is further configurable to output via the open drain output and the error edge connection a signal indicating a parity error having occurred while the memory module is in the first mode;
(g)	wherein the module controller in the second mode is further configurable to provide information related to the one or more training sequences by driving the open drain output and the error edge connection to a first state or to a second state, one of the first state and the second state being a low logic level and the other one of the first state and the second state being a high impedance state.

96. Netlist has alleged and continues to allege that Samsung infringes one or more claims of the ’595 patent, and that Samsung’s license to the ’595 patent was terminated as of July 20, 2020.

97. Samsung is not liable for infringement of the ’595 patent either before or after the alleged termination of the license. Under the Agreement, Samsung is licensed to, *inter alia*, make, use, sell, offer for sale, and import the Samsung DDR4 Memory Modules allegedly practicing the ’595 patent. Although the parties dispute whether the license was terminated, neither Samsung nor its customers or end users can be liable for infringement of the ’595 patent based on Samsung DDR4 Memory Modules made, used, sold, offered for sale, or imported before an

effective termination of the license. Moreover, Samsung has not directly or indirectly infringed any claim of the ’595 patent, either literally or under the doctrine of equivalents, at least because the Samsung DDR4 Memory Modules do not employ, incorporate, or otherwise make use of all of the limitations of the claims of the ’595 patent.

98. For example, claim 1 requires “the memory module in the second mode is configurable to perform operations related to one or more training sequences” and “wherein the module controller in the second mode is further configurable to provide information related to the one or more training sequences.” Similarly, claim 10 requires “wherein the memory module in the second mode is configurable to perform operations related to one or more training sequences” and “wherein the module controller in the second mode is further configurable to output to the memory controller open-drain signals related to the one or more training sequences.” Netlist appears to allege that the Clock-to-CA training as described in the JEDEC standard is the alleged “second mode.” However, any configuration of the alleged “memory module” or the alleged “memory controller” occurs prior to entering Clock-to-CA training and no further configuration can occur during the training. Thus, the accused Samsung DDR4 Memory Modules do not meet the limitations of at least claims 1–16.

99. As another example, claim 1 requires “wherein the module controller in the second mode is further configurable to provide information related to the one or more training sequences by driving the open drain output and the error edge connection to a first state or to a second state.” Similarly, claim 10 requires “wherein the module controller in the second mode is further configurable to output to the memory controller open-drain signals related to the one or more training sequences via the open drain output and the error edge connection while the memory module is in the second mode.” Claim 21 requires “wherein the module controller is configurable

to provide information related to the one or more training sequences by driving the open drain output and the error edge connection from one of the first state and the second state to the other one of the first state and the second state." Netlist appears to argue that the signal on the ALERT_n output pin meets these limitations during Clock-to-CA training. The signal on the ALERT_n output pin is not "information related to the one or more training sequences" or "open-drain signals related to the one or more training sequences" as required by the claims. The signal does not indicate the status of any training, and is polled by the system memory controller during Clock-to-CA training. Thus, the accused signal on the ALERT_n output pin does not satisfy the requirements of claims 1–16 and 21–24.

100. The Samsung DDR4 Memory Modules do not infringe any of claims 2–9, 11–16, 18–20, and 22–24 at least because these claims depend directly or indirectly from claims 1, 10, or 21.

101. A substantial, immediate, and real controversy exists between Samsung and Netlist regarding whether Samsung or its customers or end users infringe the '595 patent by making, using, selling, and/or offering for sale the Samsung DDR4 Memory Modules in the United States, or by importing the Samsung DDR4 Memory Modules into the United States. A judicial declaration is necessary to determine the parties' respective rights regarding the '595 patent.

102. Samsung seeks a judgment declaring that Samsung and its customers and end-users do not infringe the '595 patent, either literally or under the doctrine of equivalents, by making, using, selling, and/or offering for sale the Samsung DDR4 Memory Modules in the United States, or by importing the Samsung DDR4 Memory Modules into the United States, either directly under 35 U.S.C. § 271(a) or indirectly under 35 U.S.C. § 271(b)–(c).

COUNT III
(Declaration of Non-Infringement of the ’218 Patent)

103. Samsung restates and incorporates by reference the preceding paragraphs as if fully set forth herein.

104. The Patent Office issued the ’218 patent, titled “Memory Module And Methods For Handshaking With A Memory Controller,” on January 2, 2018. On information and belief, Netlist claims to own all rights, title, and interest in the ’218 patent. A true and correct copy of the ’218 patent is attached hereto as Exhibit C.

105. The ’218 patent has three independent claims: 1, 9, and 15. For example, claim 1 reads as follows:

Element	Claim Language
preamble	A memory module operable with a memory controller of a host system, comprising:
(a)	a printed circuit board having edge connections that fit into a corresponding slot of the host system so as to be in electrical communication with the memory controller, the edge connections including first edge connections, second edge connections, and an error edge connection in addition to the first edge connections and the second edge connections;
(b)	dynamic random access memory elements on the printed circuit board;
(c)	a module controller on the printed circuit board and coupled to the dynamic random access memory elements, the module controller having an open drain output coupled to the error edge connection; and
(d)	wherein the memory module is operable in at least a first mode and a second mode, wherein the memory module in the first mode is configured to be trained with one or more training sequences; wherein the memory module in the second mode is configured to perform one or more memory read or write operations not associated with the one or more training sequences by communicating data signals via the first edge connections in response to address and command signals received via the second edge connections;
(e)	wherein the module controller is configured to receive via the second edge connections the address and command signals associated with the one or more memory read or write operations and to control the dynamic

Element	Claim Language
	random access memory elements in accordance with the address and command signals, and wherein the module controller is further configured to output via the open drain output and the error edge connection a signal indicating a parity error having occurred while the memory module is in the second mode;
(f)	wherein the module controller is further configured to drive a notification signal associated with the one or more training sequences to the error edge connection via the open drain output while the memory module is in the first mode.

106. Netlist has alleged and continues to allege that Samsung infringes one or more claims of the ’218 patent, and that Samsung’s license to the ’218 patent was terminated as of July 20, 2020.

107. Samsung is not liable for infringement of the ’218 patent either before or after the alleged termination of the license. Under the Agreement, Samsung is licensed to, *inter alia*, make, use, sell, offer for sale, and import the Samsung DDR4 Memory Modules allegedly practicing the ’218 patent. Although the parties dispute whether the license was terminated, neither Samsung nor its customers or end users can be liable for infringement of the ’218 patent based on Samsung DDR4 Memory Modules made, used, sold, offered for sale, or imported before an effective termination of the license. Moreover, Samsung has not directly or indirectly infringed any claim of the ’218 patent, either literally or under the doctrine of equivalents, at least because the Samsung DDR4 Memory Modules do not employ, incorporate, or otherwise make use of all of the limitations of the claims of the ’218 patent.

108. For example, claim 1 requires “wherein the memory module in the first mode is configured to be trained with one or more training sequences.” Similarly, claim 9 requires a “memory module” “training with one or more training sequences while the first edge connections are not active.” Claim 15 requires “wherein the memory module in the second operation is

configured to be trained with one or more training sequences while the first edge connections are not active." Thus, claims 1–22 of the '218 patent require that the "memory module" is "configured to be trained with one or more training sequences." Netlist appears to argue that Clock-to-CA training as described in the JEDEC standard meets the "first mode" and "second operation" limitations in claims 1 and 15, respectively. However, during Clock-to-CA training, it is the system memory controller—not the accused memory module—that is being trained so that it uses the correct timing of its signals; the accused memory module is not trained during the accused mode.

109. As another example, claim 1 requires "wherein the module controller is configured . . . to control the dynamic random access memory elements in accordance with the address and command signals." Similarly, claim 15 requires "wherein the module controller in the first operation is configured . . . to control the dynamic random access memory elements in accordance with the address and command signals." In the accused Samsung DDR4 Memory Modules, the alleged module controller does not control the DRAMs. Rather, the DRAMs are controlled by the system memory controller. Thus, the accused Samsung DDR4 Memory Modules do not meet the limitations of at least claims 1–8 and 16–22.

110. As another example, claim 1 requires "wherein the module controller is further configured to drive a notification signal associated with the one or more training sequences to the error edge connection via the open drain output while the memory module is in the first mode." Similarly, claim 9 requires "memory module" "driving a notification signal associated with the one or more training sequences to the memory controller." Claim 15 requires "wherein the module controller in the second operation is configured to drive a notification signal associated with the one or more training sequences to the error edge connection via the open drain output of the module controller." Netlist appears to argue that the signal on the ALERT_n output pin meets

these limitations during Clock-to-CA training. The signal on the ALERT_n output pin is not "a notification signal associated with the one or more training sequences" as required by the claims. The signal on the ALERT_n output pin does not indicate the status of any training, and ALERT_n is polled by the system memory controller during Clock-to-CA training. Thus, the accused Samsung Memory Modules do not meet the limitations of at least claims 1–22.

111. The Samsung DDR4 Memory Modules do not infringe any of claims 2–8, 10–14, and 16–22 at least because these claims depend directly or indirectly from claims 1 or 15.

112. A substantial, immediate, and real controversy exists between Samsung and Netlist regarding whether Samsung or its customers or end users infringe the '218 patent by making, using, selling, and/or offering for sale the Samsung DDR4 Memory Modules in the United States, or by importing the Samsung DDR4 Memory Modules into the United States. A judicial declaration is necessary to determine the parties' respective rights regarding the '218 patent.

113. Samsung seeks a judgment declaring that Samsung and its customers and end-users do not infringe the '218 patent, either literally or under the doctrine of equivalents, by making, using, selling, and/or offering for sale the Samsung DDR4 Memory Modules in the United States, or by importing the Samsung DDR4 Memory Modules into the United States, either directly under 35 U.S.C. § 271(a) or indirectly under 35 U.S.C. § 271(b)–(c).

COUNT IV
(Declaration of Non-Infringement of the '912 Patent)

114. Samsung restates and incorporates by reference the preceding paragraphs as if fully set forth herein.

115. The Patent Office issued the '912 patent, titled "Memory Module Decoder," on November 17, 2009. A true and correct copy of the '912 patent is attached hereto as Exhibit D. On information and belief, Netlist claims to own all rights, title, and interest in the '912 patent.

The Patent Office issued an *Inter Partes* Reexamination Certificate for the '912 patent on February 8, 2021. A true and correct copy of the '912 patent and Reexamination Certificate is included in Exhibit D.

116. The '912 patent has eleven independent claims: 1, 15, 16, 28, 39, 77, 80, 82, 86, 88, and 90. For example, claim 16 reads as follows:

Element	**Claim Language**
preamble	A memory module connectable to a computer system, the memory module comprising:
(a)	a printed circuit board;
(b)	a plurality of double-data-rate (DDR) memory devices coupled to the printed circuit board, the plurality of DDR memory devices having a first number of DDR memory devices arranged in a first number of ranks;
(c)	a circuit coupled to the printed circuit board, the circuit comprising a logic element and a register, the logic element receiving a set of input signals from the computer system, the set of input signals comprising at least one row/column address signal, bank address signals, and at least one chip-select signal, the set of input signals configured to control a second number of DDR memory devices arranged in a second number of ranks, the second number of DDR memory devices smaller than the first number of DDR memory devices and the second number of ranks less than the first number of ranks, the circuit generating a set of output signals in response to the set of input signals, the set of output signals configured to control the first number of DDR memory devices arranged in the first number of ranks, wherein the circuit further responds to a command signal and the set of input signals from the computer system by selecting one or two ranks of the first number of ranks and transmitting the command signal to at least one DDR memory device of the selected one or two ranks of the first number of ranks; and
(d)	a phase-lock loop device coupled to the printed circuit board, the phase-lock loop device operatively coupled to the plurality of DDR memory devices, the logic element, and the register,
(e)	wherein the command signal is transmitted to only one DDR memory device at a time.

117. Netlist has alleged and continues to allege that Samsung infringes one or more claims of the '912 patent, and that Samsung's license to the '912 patent was terminated as

of July 20, 2020. On information and belief, in the Google Infringement Action, Netlist contends that the Samsung DDR4 Memory Modules infringe claim 16 of the ’912 patent. Specifically, in the amended infringement contentions, Netlist points to the PDA mode in JESD79-4C for DDR4 SDRAM as the infringing feature.

118. Samsung is not liable for infringement of the ’912 patent either before or after the alleged termination of the license. Under the Agreement, Samsung is licensed to, *inter alia*, make, use, sell, offer for sale, and import the Samsung DDR4 Memory Modules allegedly practicing the ’912 patent. Although the parties dispute whether the license was terminated, neither Samsung nor its customers or end users can be liable for infringement of the ’912 patent based on Samsung DDR4 Memory Modules made, used, sold, offered for sale, or imported before an effective termination of the license. Moreover, Samsung has not directly or indirectly infringed any claim of the ’912 patent, either literally or under the doctrine of equivalents, at least because the Samsung DDR4 Memory Modules do not employ, incorporate, or otherwise make use of all of the limitations of the claims of the ’912 patent.

119. For example, the Samsung DDR4 Memory Modules do not meet claim limitation 16(c) at least because there is no “set of output signals” generated in response to a set of input signals “comprising at least one row/column address signal, bank address signals, and at least one chip-select signal.” The alleged set of output signals are not generated in response to a set of input signals that include all of the signals required by the claim.

120. As another example, the Samsung DDR4 Memory Modules do not meet claim limitation 16(c) at least because there is no “set of output signals configured to control the first number of DDR memory devices arranged in the first number of ranks” that are generated in response to “the set of input signals configured to control a second number of DDR memory

devices arranged in a second number of ranks," where "the second number of DDR memory devices [is] smaller than the first number of DDR memory devices and the second number of ranks [is] less than the first number of ranks." In litigation against Inphi Corporation ("Inphi"), *Netlist, Inc. v. Inphi Corp.*, No. 09-cv-06900 (C.D. Cal.), Netlist alleged that a claim limitation containing similar language is satisfied by the Rank Multiplication Mode in JESD82-30 for LRDIMM DDR3 Memory Buffer (MB) Specification. The DDR4 Standards do not include the Rank Multiplication Mode.

121. As another example, the Samsung DDR4 Memory Modules do not meet claim limitation 16(e) at least because, in the PDA mode, there is no "command signal [that] is transmitted to only one DDR memory device at a time." Rather, the alleged command signal is transmitted to multiple DDR memory devices at a time.

122. As another example, the Samsung DDR4 Memory Modules do not meet at least the "a plurality of double-data-rate (DDR) memory devices . . . a first number of ranks" limitation, "a circuit . . . the first number of ranks" limitation, "wherein, the register . . . by the logic element" limitation, and "wherein the logic element . . . the PLL clock signal" limitation in claim 1. In litigation against Inphi, Netlist alleged that these claim limitations are satisfied by the Rank Multiplication Mode in JESD82-30 for LRDIMM DDR3 Memory Buffer (MB) Specification. The Samsung DDR4 Memory Modules do not meet these limitations at least because the DDR4 Standards do not include the Rank Multiplication Mode. For the same reason, the Samsung DDR4 Memory Modules do not meet at least the following limitations in claims 15, 28, 39, 77, 80, 82, 86, 88, and 90:

- the "a plurality of double-data-rate (DDR) memory devices . . . a first number of ranks" limitation, "a circuit . . . the first number of ranks" limitation, "wherein, the

register . . . by the logic element" limitation, and "wherein the logic element . . . the PLL clock signal" limitation in claim 15;

- the "a plurality of double-data-rate (DDR) dynamic random-access memory (DRAM) devices . . . a first number of ranks" limitation, "a circuit . . . the selected at least one rank" limitation, "wherein, the register . . . by the logic element" limitation, and "wherein the logic element . . . the PLL clock signal" limitation in claim 28;
- the "a plurality of double-data-rate (DDR) memory devices . . . a first number of chip-select signals" limitation, "at least one integrated circuit element . . . the selected at least one rank" limitation, "wherein, the register . . . by the logic element" limitation, and "wherein the logic element . . . the PLL clock signal" limitation in claim 39;
- the "a plurality of double-data-rate (DDR) memory devices . . . a first number of ranks" limitation, "a circuit . . . the first number of ranks" limitation, "wherein, the register . . . by the logic element" limitation, and "wherein the logic element . . . the second number of ranks" limitation in claim 77;
- the "a plurality of double-data-rate (DDR) memory devices . . . a first number of ranks" limitation, "a circuit . . . the first number of ranks" limitation, "wherein operation of the register . . . the second number of ranks" limitation, "wherein the bank address signals . . . by the logic element" limitation, "wherein a plurality of row/column address signals . . . by the logic element" limitation, and "wherein the generation of the first number of chip-select signals . . . the phase-lock loop device" limitation in claim 80;

- the "a plurality of double-data-rate (DDR) memory devices . . . a first number of ranks" limitation, "a circuit . . . the first number of ranks" limitation, "wherein, the register . . . by the logic element" limitation, and "wherein the logic element . . . the set of input control signals" limitation in claim 82;
- the "a plurality of double-data-rate (DDR) memory devices . . . a first number of ranks" limitation, "a circuit . . . the first number of ranks" limitation, "wherein, the register . . . by the logic element" limitation, and "wherein the logic element . . . the set of input signals" limitation in claim 86;
- the "a plurality of double-data-rate (DDR) dynamic random-access memory (DRAM) devices . . . a first number of ranks" limitation, "a circuit . . . the selected at least one rank" limitation, "wherein, the register . . . by the logic element" limitation, and "wherein the logic element . . . the set of input control signals" limitation in claim 88; and
- the "a plurality of double-data-rate (DDR) memory devices . . . a first number of chip-select signals" limitation, "at least one integrated circuit . . . the selected at least one rank" limitation, "wherein, the register . . . by the logic element" limitation, and "wherein the logic element . . . the plurality of input signals" limitation in claim 90.

123. The Samsung DDR4 Memory Modules do not infringe any of claims 2–14, 17–27, 29–38, 40–76, 78, 79, 81, 83–85, 87 and 91 at least because these claims depend directly or indirectly from claims 1, 15, 16, 28, 39, 77, 80, 82, 86, 88, or 90.

124. A substantial, immediate, and real controversy exists between Samsung and Netlist regarding whether Samsung or its customers or end users infringe the '912 patent by

making, using, selling, and/or offering for sale the Samsung DDR4 Memory Modules in the United States, or by importing the Samsung DDR4 Memory Modules into the United States. A judicial declaration is necessary to determine the parties' respective rights regarding the '912 patent.

125. As alleged in Count VII below, the claims of the '912 patent were subject to reexamination. During the course of the reexamination, Netlist canceled originally issued claims 2, 5, 7, 9, 21, 23, 25, 26, 30, 33, 42, 44, and 51; amended claims 1, 15, 16, 28, 39, and 43; and added new claims 52–91. Claims 3, 4, 6, 8, 10–14, 17–20, 22, 24, 27, 29, 31, 32, 34–38, 40, 41, and 45–50 were deemed patentable because of their dependence on amended claims. These amendments and additions, as well as arguments made by Netlist during the reexamination proceeding, substantively changed the scope of the originally issued claims of the '912 patent. Following an appeal to the Federal Circuit, the Patent Office issued an *Inter Partes* Reexamination Certification for the '912 patent on February 8, 2021.

126. As a consequence of those amendments and additions, as well as Netlist's reexamination proceeding arguments, the making, using, selling, offering for sale, and/or importing of the Samsung DDR4 Memory Modules are protected by absolute and/or equitable intervening rights. In particular, to the extent that Netlist's allegations are based on Samsung DDR4 Memory Modules that were made, used, offered for sale, sold, and/or imported prior to the issuance of the reexamination certificate, the defense of absolute intervening rights bars any liability for infringement with respect to such products. To the extent Netlist's accusations are based on Samsung DDR4 Memory Modules that were made, used, offered for sale, sold, and/or imported after the issuance of the reexamination certificate, the defense of equitable intervening rights applies, because Samsung made substantial preparation of those products prior to issuance

of the certificate. Netlist's infringement allegations thus are barred, in whole or in part, by absolute and/or equitable intervening rights under 35 U.S.C. §§ 252 and 307(b).

127. Samsung seeks a judgment declaring that Samsung and its customers and end-users do not infringe the '912 patent, either literally or under the doctrine of equivalents, by making, using, selling, and/or offering for sale the Samsung DDR4 Memory Modules in the United States, or by importing the Samsung DDR4 Memory Modules into the United States, either directly under 35 U.S.C. § 271(a) or indirectly under 35 U.S.C. §§ 271(b) and (c).

COUNT V
(Declaration of Unenforceability of the '523 Patent Due to Inequitable Conduct & Unclean Hands)

128. Samsung restates and incorporates by reference the preceding paragraphs as if fully set forth herein.

A. Netlist Individuals Substantively Involved in the '523 Patent Prosecution

129. On information and belief, at least the following people associated with Netlist were substantively involved in the prosecution of the application that issued as the '523 patent: Hyun Lee; Jayesh Bhakta; Soonju Choi; Noel Whitley; Marwan Fawal; Gail Sasaki; and patent prosecution counsel Jamie Zheng (collectively "Netlist Individuals Substantively Involved in the '523 Patent Prosecution").

130. Hyun Lee, Jayesh Bhakta and Soonju Choi are the named inventors of the '523 patent and signed oaths that were submitted with the application attesting to being the inventors of the alleged invention(s) claimed in the application.

131. On information and belief, Noel Whitley was, during the prosecution of the application that issued as the '523 patent, an employee and/or contractor for Netlist with responsibility for managing prosecution of the application that issued as the '523 patent.

132. On information and belief, Marwan Fawal was, during the prosecution of the application that issued as the ’523 patent, a contractor for Netlist who consulted on the prosecution of the application that issued as the ’523 patent.

133. On information and belief, Gail Sasaki was, during the prosecution of the application that issued as the ’523 patent, an employee and/or contractor for Netlist who signed the power of attorney for the application that issued as the ’523 patent.

134. Jamie Zheng is the prosecuting attorney for the application that issued as the ’523 patent.

135. On information and belief, the above individuals involved in the prosecution of the application that issued as the ’523 patent, such as Noel Whitley, Marwan Fawal and/or Jamie Zheng, utilized information obtained in the litigation between Netlist and SK hynix regarding, for instance, SK hynix’s non-infringement positions for the ’434, ’501, and/or ’064 patents to which the application that issued as the ’523 patent claims priority, for purposes of assisting in drafting and/or amending the claims of the application that issued as the ’523 patent in an attempt to overcome SK hynix’s non-infringement arguments.

136. On information and belief, each of the Netlist Individuals Substantively Involved in the ’523 Patent Prosecution is an individual associated with the filing and prosecution of the application that issued as the ’523 patent.

B. The Inventors and Others Knew of Ellsberry and Jeddeloh752 Before the Application That Issued as the ’523 Patent Was Even Filed

137. The ’523 patent claims priority to the same provisional patent applications to which the ’434, ’501, and ’064 patents claim priority. All four patents share the same specification, inventors, and alleged priority dates.

1. Early Knowledge of Ellsberry

138. In addition to being a named inventor on the ’523 patent, Jayesh Bhakta is a named inventor on the ’912 patent. U.S. Patent Application Publication No. 2006/0277355 (“Ellsberry”) was cited during prosecution of the ’912 patent in 2010. On information and belief, at least Jayesh Bhakta became aware of Ellsberry at that time.

139. On information and belief, at least Hyun Lee, Noel Whitley and Jamie Zheng learned of Ellsberry during the prosecution of other Netlist patents before the application that issued as the ’523 patent was filed.

2. Early Knowledge of Jeddeloh752

140. U.S. Patent No. 7,310,752 (“Jeddeloh752”) was disclosed to JEDEC as potentially essential to JEDEC standards before 2010, and appears in many JEDEC presentations as a disclosed patent, including to the standards for DDR4 LRDIMMs that Netlist accuses of infringement.

141. Hyun Lee regularly attended JEDEC meetings for at least the JC-40 committee and the JC-45 committee from 2008 to 2010, as well as before and after that timeframe. For instance, on information and belief, Hyun Lee attended at least the following JC-40 meetings: No. 155, Aug. 28, 2008; No. 156, Dec. 4-5, 2008; No. 158, June 4, 2009; No. 159, Sept. 10, 2009; No. 160, Dec. 10, 2009; No. 161, Mar. 4. 2010. And, on information and belief, Hyun Lee attended at least the following JC-45 meetings: No. 20, Aug 27-28, 2008; No. 21, Dec. 3-5, 2008; No. 23, June 3, 2009; No. 24, Sept 9-10, 2009; No. 25, Dec. 9, 2009; No. 26, Mar. 2-3, 2010.

142. By virtue of his attendance at those meetings, active involvement in JEDEC and otherwise, on information and belief, Hyun Lee was aware of Jeddeloh752 and its disclosure as a potentially essential patent to JEDEC standards, including DDR4 LRDIMM standards.

143. Hyun Lee, on information and belief, shared JEDEC presentations, including Jeddeloh752, with at least Noel Whitley and Jayesh Bhakta and they too learned of Jeddeloh752 and its disclosure as a potentially essential patent to JEDEC standards, including DDR4 LRDIMM standards, before the application that issued as the '523 patent was filed.

C. '523 Patent Prosecution and Corresponding Events

144. Netlist filed the application, No. 14/229,844, which ultimately issued as the '523 patent, on March 29, 2014.

1. Netlist "Buries" the Examiner with Everything, Except Ellsberry and Jeddeloh752

145. Netlist submitted information disclosure statements on August 7, 2014, August 10, 2014, December 24, 2014, February 16, 2016, February 17, 2016, February 18, 2016, and July 13, 2016.

146. Netlist submitted so many references in those information disclosure statements that the examiner asked Netlist to identify the ones "which have particular significance," and "to highlight those documents which have been specifically brought to applicant's attention and/or are known to be of most significance."

147. Despite submitting so many references, Netlist did not submit Ellsberry or Jeddeloh752.

148. Nor did Netlist ever do what the examiner requested with respect to the references it did submit: identify the ones "which have particular significance," and "highlight those documents which have been specifically brought to applicant's attention and/or are known to be of most significance."

149. On October 20, 2016, the examiner issued a final office action rejecting the then-pending claims. In that office action, the examiner stated (citations omitted, emphasis added):

> An applicant's duty of disclosure of material information is not satisfied by presenting a patent examiner with "a mountain of largely irrelevant data from which he is presumed to have been able, with his expertise and with adequate time, to have found the critical data. It ignores the real world conditions under which examiners work." An applicant has a duty to not just disclose pertinent prior art references but to make a disclosure in such way as not to ***"bury"*** it within other disclosures of less relevant prior art. *It is unreasonable for Examiner to review all of the cited references thoroughly. By signing the accompanying 1449 forms, Examiner is merely acknowledging the submission of the cited references and indicating that* ***only a cursory review has been made****.*

Office Action, Application No. 14/229,844 (October 20, 2016).

2. Netlist Sues SK hynix on Parent Patents, Learns SK hynix Non-Infringement and Invalidity Positions, and Relies on Jeddeloh752 in Those Suits, All While Continuing to Prosecute the '523 Patent

150. On August 31 and September 1, 2016, Netlist filed complaints against SK hynix in the Central District of California and the U.S. International Trade Commission asserting the '434, '501 and '064 patents against SK hynix.

151. On January 3-5, 2017, SK hynix filed IPR petitions against each of the '434, '501 and '064 patents. *See* IPR2017-00560 ('064 IPR); IPR2017-00561 ('434 IPR); IPR2017-00562 ('501 IPR).

152. Returning to the pending application that eventually issued as the '523 patent, on March 21, 2017, Netlist filed a request for continued examination that, among other things, amended the claims of the application.

153. On March 24, 2017, Netlist filed another information disclosure statement. Like all previous information disclosure statements, it did not include Ellsberry or Jeddeloh752.

154. On April 4, 2017, the examiner issued a non-final office action rejecting the then-pending claims.

155. On September 5, 2017, Netlist filed an amendment that, among other things, again amended the claims of the application that issued as the ’523 patent.

156. On September 5, 2017, Netlist also filed another information disclosure statement. Like all previous information disclosure statements, it did not include Ellsberry or Jeddeloh752.

157. On December 8, 2017, the examiner issued a final office action rejecting the then-pending claims.

158. During the period of time addressed above that Netlist was amending the claims in the application that issued as the ’523 patent, Netlist and SK hynix exchanged their prehearing briefs in the then-pending 1023 ITC Investigation, in which Netlist was asserting the ’434, ’501, and ’064 patents against SK hynix, conducted the full evidentiary hearing in that Investigation, submitted post-hearing briefs, and submitted petitions to the Commission seeking review of the Administrative Law Judge’s (ALJ) initial determination finding no infringement of the ’434, ’501, and ’064 patents, all of which addressed SK hynix’s arguments for why the accused products did not infringe the ’434, ’501, and ’064 patents’ claims.

159. Netlist continued amending the claims thereafter, as set forth below.

160. Furthermore, during the 1023 ITC investigation, Netlist specifically relied on Jeddeloh752 as a patent declared essential to the DDR4 LRDIMM standards, the practice of which it alleged infringed the ’434, ’501, and ’064 patents, when arguing that Netlist had fulfilled its obligations to offer a license to the ’434, ’501, and ’064 patents on RAND terms. For instance, Netlist submitted an expert’s testimony that relied on Jeddeloh752 as support for his opinion that Netlist’s licensing offers for the ’434, ’501, and ’064 patents were reasonable and non-discriminatory.

3. Netlist Receives SK hynix's '907 Patent IPR Presenting Ellsberry and Arguments Based Thereon, While Prosecuting the '523 Patent

161. On December 22, 2017, SK hynix filed an IPR petition against the '907 patent asserting that the Ellsberry prior art reference rendered all of the claims of the '907 patent unpatentable. *See* IPR2018-00362. That IPR petition explained, among other things, how Ellsberry disclosed or rendered obvious claim limitations directed to memory modules with DRAMs organized in ranks on a printed circuit board with edge connectors, a control module for buffering address and control signals from a system memory controller, and distributed data buffers for buffering data signals to/from a system memory controller, as well as normal operations of that memory module.

162. Returning to the pending application that eventually issued as the '523 patent, on February 8, 2018, Netlist filed a request for consideration under the after final consideration pilot program 2.0 that, among other things, yet again amended the claims of the application that issued as the '523 patent.

163. On February 15, 2018, Netlist filed a request for continued examination that, among other things, yet further amended the claims of the application that issued as the '523 patent.

164. On April 10, 2018, the examiner issued an *Ex parte Quayle* action indicating the application was in condition for allowance, other than formal matters.

165. On May 2, 2018, Netlist filed a response to the *Ex parte Quayle* action that, among other things, amended yet again the claims of the application that issued as the '523 patent.

166. On May 17, 2018, Netlist submitted additional information disclosure statements. Like so many before them, the information disclosure statements did not include Ellsberry or Jeddeloh752.

167. On August 28, 2018, Netlist submitted yet another information disclosure statement, this time listing the Final Written Decisions ("FWDs") from the IPRs of the '434, '501, and '064 patents. It still did not include Ellsberry or Jeddeloh752.

168. On October 16, 2018, the examiner issued a Notice of Allowance for the application that issued as the '523 patent.

169. On November 20, 2018, the examiner filed an interview summary for an applicant-initiated interview that occurred on November 13, 2018, indicating that the substance of the interview was: "Discussed status of the application and IDS dated on 8/28/18." The summary includes nothing regarding Ellsberry or Jeddeloh752, and they still were not disclosed.

170. On January 15, 2019, Netlist paid the issue fee for the application that issued as the '523 patent.

171. By the time of Netlist's interview with the examiner in November 2018, before which Netlist submitted its August 2018 IDS:

1) the PTAB had issued a decision instituting SK hynix's IPR against the '907 patent based on Ellsberry;

2) Ms. Zheng has been specifically questioned about Ellsberry at a deposition;

3) a German patent cancellation proceeding against a German counterpart to the '907 patent based on Ellsberry was ongoing;

4) a Chinese counterpart to the '907 patent had been ruled invalid based on Ellsberry by a Chinese tribunal; and

5) a continuation application to the '907 patent that Ms. Zheng was prosecuting had its claims rejected based on Ellsberry.

172. Despite all of the above, neither Ms. Zheng, nor any other of the Netlist Individuals Substantively Involved in the ’523 Patent Prosecution, submitted Ellsberry or Jeddeloh752 to the examiner before the ’523 patent issued.

D. SK hynix’s IPR Against the ’523 Patent

173. On August 21, 2020, SK hynix filed an IPR petition against the ’523 patent asserting that Ellsberry in combination with Jeddeloh752 render all the claims of the patent unpatentable, either by themselves or in combination with other references for certain dependent claims. *See* IPR2020-01421.

174. In general, that petition argues that Ellsberry discloses the claimed details of a memory module with a normal mode of operation and DRAMs organized in ranks on a printed circuit board with edge connectors, a control module for buffering address and control signals from a system memory controller, and distributed data buffers for buffering data signals to/from a system memory controller, and that Jeddeloh752 renders obvious adding a test mode to Ellsberry’s memory modules and the claimed circuit functionality to implement the testing.

175. On March 16, 2021, the PTAB instituted the IPR filed against the ’523 patent as to all challenged claims. *See* IPR2020-01421, Paper No. 10.

E. Netlist’s Failure to Disclose Ellsberry During the Prosecution of the ’523 Patent

176. At least by December 22, 2017, Netlist Individuals Substantively Involved in the ’523 Patent Prosecution, including at least Jamie Zheng, Hyun Lee, and Noel Whitley, knew of the Ellsberry prior art reference, and SK hynix’s detailed explanations (set forth in its IPR petition) as to why that reference disclosed or rendered obvious claim limitations directed to memory modules with DRAMs organized in ranks on a printed circuit board with edge connectors, a control module for buffering address and control signals from a system memory controller, and

distributed data buffers for buffering data signals to/from a system memory controller, as well as normal operations of that memory module. On information and belief, Netlist Individuals Substantively Involved in the ’523 Patent Prosecution, including at least Jamie Zheng, Hyun Lee and Noel Whitley, recognized the materiality of Ellsberry to the then-pending claims of the application that issued as the ’523 patent, either at that time or at least by the time of the November 2018 interview with the examiner.

177. Ellsberry is not cumulative of other art or information before the examiner of the application that issued as the ’523 patent.

178. The Patent Office would not have allowed at least one claim of the ’523 patent to issue had it been aware of Ellsberry, at least because it would have found a claim obvious over that art, as explained in SK hynix’s IPR petition filed against the ’523 patent.

179. On information and belief, Netlist Individuals Substantively Involved in the ’523 Patent Prosecution, including at least Jamie Zheng, Hyun Lee, and Noel Whitley, specifically intended to deceive the Patent Office into believing that the claims of the ’523 patent were patentable, by withholding Ellsberry from the examiner during prosecution of the application that issued as the ’523 patent.

F. Netlist’s Failure to Disclose Jeddeloh752 During the Prosecution of the ’523 Patent

180. At least by December 2017, on information and belief, Hyun Lee and Noel Whitley knew of -- by virtue of for instance Hyun Lee’s attendance at JEDEC meetings and Noel Whitley’s knowledge of Netlist’s positions regarding Netlist’s RAND contentions taken in the 1023 Investigation -- Jeddeloh752 and its disclosure as a potentially essential patent to JEDEC standards, including DDR4 LRDIMM standards.

181. Jeddeloh752 is not cumulative of other art or information before the examiner of the application that issued as the ’523 patent.

182. The Patent Office would not have allowed at least one claim of the ’523 patent to issue had it been aware of Jeddeloh752, at least because it would have found a claim obvious over that art in combination with Ellsberry, as explained in SK hynix’s IPR petition filed against the ’523 patent.

183. On information and belief, Netlist Individuals Substantively Involved in the ’523 Patent Prosecution, for instance at least Hyun Lee and Noel Whitley, recognized the materiality of that art and specifically intended to deceive the Patent Office into believing that the claims of the ’523 patent are patentable by withholding that art from the examiner during prosecution of the application that issued as the ’523 patent; Netlist Individuals Substantively Involved in the ’523 Patent Prosecution, for instance at least Noel Whitley and Jamie Zheng, specifically intended to deceive the Patent Office into believing that the claims of the ’523 patent are patentable by foregoing presenting the pending claims in the application to Hyun Lee and electing not to ask Hyun Lee for relevant, material art such as Jeddeloh752, such that they could forego submitting such art to the examiner during prosecution of the application that issued as the ’523 patent.

* * * *

184. Inequitable Conduct: Any one or more acts set forth above are sufficient in and of itself/themselves to demonstrate that Netlist committed inequitable conduct during the prosecution of the ’523 patent that renders the ’523 patent unenforceable.

185. Unclean Hands: Furthermore, any one or more acts set forth above are sufficient in and of itself/themselves to demonstrate that Netlist has unclean hands in relation to its assertion of the ’523 patent that renders the ’523 patent unenforceable.

COUNT VI
(Declaration of Unenforceability of the ’218 and ’595 Patents Due to Inequitable Conduct & Unclean Hands)

186. Samsung restates and incorporates by reference the preceding paragraphs as if fully set forth herein.

A. Netlist Individuals Substantively Involved in the ’218 and ’595 Patent Prosecutions

187. On information and belief, at least the following people associated with Netlist were substantively involved in the prosecution of the applications that issued as the ’218 and/or ’595 patents: Hyun Lee; Noel Whitley; Marwan Fawal; Gail Sasaki; and patent prosecution counsel Jamie Zheng (collectively “Netlist Individuals Substantively Involved in the ’218 and ’595 Patent Prosecutions”).

188. Hyun Lee is the lone named inventor of the ’218 and ’595 patents, and signed oaths that were submitted with each application attesting to being the sole inventor of the alleged inventions claimed in those applications.

189. On information and belief, Noel Whitley was, during the prosecution of the applications that issued as the ’218 and ’595 patents, an employee and/or contractor for Netlist with responsibility for managing prosecution of the applications that issued as the ’218 and ’595 patents.

190. On information and belief, Marwan Fawal was, during the prosecution of the applications that issued as the ’218 and ’595 patents, a contractor for Netlist who consulted on the prosecution of the applications that issued as the ’218 and ’595 patents.

191. On information and belief, Gail Sasaki was, during the prosecution of the applications that issued as the ’218 and ’595 patents, an employee and/or contractor for Netlist who signed the powers of attorney for each of the applications that issued as the ’218 and ’595 patents.

192. Jamie Zheng is the prosecuting attorney for the applications that issued as the ’218 and ’595 patents.

193. On information and belief, the above individuals involved in the prosecution of the applications that issued as the ’218 and ’595 patents, such as Noel Whitley, Marwan Fawal, and/or Jamie Zheng, utilized information obtained in litigation between Netlist and SK hynix regarding, for instance, SK hynix’s non-infringement positions for the ’837 patent and/or the ’623 patent to which the applications that issued as the ’218 and ’595 patents claim priority, for purposes of assisting in drafting and/or amending the claims of the applications that issued as the ’218 and ’595 patents in an attempt to overcome arguments that DDR4 memory modules are non-infringing.

194. On information and belief, each of the Netlist Individuals Substantively Involved in the ’218 and ’595 Patent Prosecutions is an individual associated with the filing and prosecution of the applications that issued as the ’218 and ’595 patents.

B. Background on the Alleged Invention, and the Prosecution of the ’218 and ’595 Patents, and Events Occurring During the Same

195. Both the ’218 and ’595 patents claim priority to the same provisional patent application to which the ’837 and ’623 patents claim priority. All four patents share the same specification, inventor, and alleged priority dates.

196. Netlist filed a terminal disclaimer for the ’623 patent over the ’837 patent, and over the application that issued as the ’218 patent. Netlist likewise filed a terminal disclaimer

for the ’218 patent over the ’837 patent. Netlist likewise filed a terminal disclaimer for the ’595 patent over the ’837 patent, and over the ’218 patent.

1. Hyun Lee’s Alleged Solo Conception and Reduction to Practice, and Regular Attendance at JEDEC Meetings

197. Hyun Lee regularly attended JEDEC meetings for at least the JC-40 committee and the JC-45 committee from 2008 to 2010, as well as before and after that timeframe. For instance, on information and belief, Hyun Lee attended at least the following JC-40 meetings: No. 155, Aug. 28, 2008; No. 156, Dec. 4-5, 2008; No. 158, June 4, 2009; No. 159, Sept. 10, 2009; No. 160, Dec. 10, 2009; No. 161, Mar. 4. 2010. And, on information and belief, Hyun Lee attended at least the following JC-45 meetings: No. 20, Aug 27-28, 2008; No. 21, Dec. 3-5, 2008; No. 23, June 3, 2009; No. 24, Sept 9-10, 2009; No. 25, Dec. 9, 2009; No. 26, Mar. 2-3, 2010.

198. By virtue of his attendance at those meetings, active involvement in JEDEC and otherwise, on information and belief, Hyun Lee was aware of the draft and final specifications for DDR3 RDIMMs being considered and voted upon by those committees, including JESD82-29, dated December 2009, as well as prior drafts of it, such as a draft dated May 2009 on its cover, and with notes in the headers of its pages indicating that it was last edited June 4, 2009 5:43 am, and the other specifications for DDR3 RDIMM considered by those committees.

199. A true and correct copy of JESD82-29 is attached as Exhibit N. On information and belief, this standard was circulated at or before, and discussed at and voted on at or before, JC-40 and JC-45 committee meetings that Hyun Lee attended.

200. A true and correct copy of a draft of JESD82-29, dated May 2009 on its cover and with notes in the headers of its pages indicating that it was last edited June 4, 2009 5:43 am, is attached as Exhibit O. On information and belief, this draft was circulated at or before, and discussed at, the June 3-4, 2009 JC-40 and JC-45 committee meetings that Hyun Lee attended.

201. By virtue of his attendance at those meetings, active involvement in JEDEC and otherwise, on information and belief, Hyun Lee was aware of the draft and final specifications for DDR3 LRDIMMs being considered and voted upon by those subcommittees, including the Committee Letter Ballot sent to committee members in November 2009 with the subject "LRDIMM DDR3 Memory Initialization Chapter Proposal," as well as prior drafts of it and the other specifications for DDR3 LRDIMM considered by those committees, such as another Committee Letter Ballot sent to committee members in November 2009 with the subject "DDR3 LRDIMM Design Specification Body."

202. A true and correct copy of the Committee Letter Ballot sent to committee members in November 2009 with the subject "LRDIMM DDR3 Memory Initialization Chapter Proposal" is attached as Exhibit P.

203. A true and correct copy of the Committee Letter Ballot sent to committee members in November 2009 with the subject "DDR3 LRDIMM Design Specification Body" is attached as Exhibit Q.

204. Draft specifications, ballots and presentations distributed to the members of the JC-40 and/or JC-45 committees of JEDEC were distributed to many (20+) key members of the interested public, with no obligation of confidentiality, and with the expectation they would be freely disclosed to and discussed with others. As such, they were publicly accessible as of their distribution dates, and are printed publications under 35 U.S.C. § 102 as of those distribution dates.

205. Distributed specifications, such as JESD82-29, are printed publications under 35 U.S.C. § 102 as of their release dates.

206. The provisional application to which the '837, '623, '218, and '595 patents all claim priority was filed on June 12, 2009, naming Hyun Lee as the sole inventor.

207. In a case brought by Netlist in the Central District of California, *Netlist Inc. v. SK hynix, Inc.*, No. 8:16-CV-01605, Netlist explained to the court during claim construction that the '837 patent discloses (and thus the '623, '218, and '595 patents disclose, since they all share a common specification):

> an improved configuration for memory modules which includes the system memory controller handing off portions of an initialization sequence to the memory module. *See* '837 Patent at 2:56–59 (JX-0006). … The '837 Patent discloses an apparatus and method of handshaking, in which the memory subsystem (the memory module) sends a signal to the system memory controller indicating a status of the initialization procedure.

Netlist Inc. v. SK hynix, Inc. (No. 8:16-CV-01605), D.I. 124 at 3–4.

208. Thus, according to Netlist, the '218 and '595 patents disclose an "improved" memory module that (1) executes "hand[ed] off portions of an initialization sequence" from "the system memory controller" and (2) "sends a signal to the system memory controller indicating a status of the initialization procedure."

209. The provisional application explicitly states that a "recent proposal in JEDEC for LR-DIMM (Load Reduced DIMM) requires" the system memory controller "to hand over one or more parts of the initialization operation sequences" to the memory module, "which raises an unprecedented issue" for the system memory controller because "it needs a way of handshaking with the" memory module such that the memory module notifies the system memory controller when the initialization sequence is complete.

210. Netlist has admitted that the "recent proposal" referenced in the provisional application is a June 4, 2009 presentation by Inphi entitled, "MB Initialization sequence Item 142.35," that was presented to the members of JEDEC at a JEDEC committee meeting on June 4, 2009.

211. On information and belief, Hyun Lee attended that meeting, witnessed that presentation, and was present for the discussions that occurred about it.

212. A true and correct copy of the June 4, 2009 "MB Initialization sequence Item 142.35" presentation by Inphi is attached as Exhibit R.

213. The "MB Initialization sequence Item 142.35" presentation discloses a system memory controller handing off portions of an initialization sequence to the memory module, such as MB-DRAM interface training.

214. At that same meeting, another presentation was made, by IDT, Texas Instruments, Montage Technology, and Inphi, entitled "Memory Buffer Membist for LRDIMM DDR3 MB TG item # 142.43."

215. On information and belief, Hyun Lee witnessed that presentation and was present for the discussions that occurred about it as well.

216. A true and correct copy of the "Memory Buffer Membist for LRDIMM DDR3 MB TG item # 142.43" presentation is attached as Exhibit S.

217. On information and belief, and based on Netlist's apparent view of the scope of the alleged invention, the "Memory Buffer Membist for LRDIMM DDR3 MB TG item # 142.43" presentation discloses a memory module sending a signal to the system memory controller indicating a status of an initialization procedure, MEMBIST testing and/or training. For instance, on information and belief and based on Netlist's apparent view of the scope of the alleged invention, the meeting minutes for the June 4, 2009 JEDEC meeting, which Hyun Lee attended, state (regarding the discussions surrounding that presentation) that the memory module "[c]an use an error indicator … to report errors."

218. On information and belief, after attending the June 4, 2009 meeting and listening to these ideas from other members of JEDEC, Hyun Lee returned to Netlist and hurriedly completed drafting the provisional application to which the ’837, ’623, ’218 and ’595 patents all claim priority, naming himself as the sole inventor, and had it filed only eight days after that meeting, on June 12, 2009.

2. ’218 Patent Prosecution and Corresponding Events

219. Netlist filed the application, No. 15/088,115, that issued as the ’218 patent on April 1, 2016.

220. On October 12, 2017, the examiner issued a Notice of Allowance for the application that issued as the ’218 patent.

221. On November 15, 2017, Netlist filed an Amendment after Allowance and an IDS, and paid the issue fee for the application that issued as the ’218 patent.

222. On December 1, 2017, the examiner accepted the Amendment.

223. On December 13, 2017, the examiner issued an issue date notification for the application that issued as the ’218 patent. That notification specified an issue date of January 2, 2018.

224. The very next day, on December 14, 2017, SK hynix filed an IPR petition against the ’623 patent asserting that U.S. Patent Application Publication No. 2008/0098277 (“Hazelzet”), alone or in combination with, for instance, U.S. Patent No. 8,139,430 (“Buchmann”), U.S. Patent Application Publication No. 2008/0155378 (“Talbot”), or U.S. Patent Application Publication No. 2008/0155378 (“Amidi”), rendered all of the claims of the ’623 patent unpatentable. *See* IPR2018-00303, Paper No. 1.

225. Netlist took no action to withdraw the application that issued as the ’218 patent from issuance, or to otherwise continue prosecution of that application, and the application issued as the ’218 patent on January 2, 2018.

3. ’595 Patent Prosecution and Corresponding Events

226. On information and belief, instead of seeking to withdraw the application that issued as the ’218 patent from issuance and submit, for instance, the ’623 IPR petition, Hazelzet, Buchmann, Talbot, and/or Amidi, for consideration by the examiner, Netlist prepared the application, No. 15/857,553, that eventually issued as the ’595 patent for filing, and filed that application on December 28, 2017.

227. On information and belief, Netlist did eventually submit the ’623 IPR petition, Hazelzet, Buchmann, Talbot, and Amidi for consideration by the examiner of the application that issued as the ’595 patent.

228. On February 6, 2019, the examiner issued a Notice of Allowance for the application that issued as the ’595 patent.

229. Instead of paying the issue fee, on March 1, 2019, Netlist filed a request for continued examination that, among other things, amended the claims of the application that issued as the ’595 patent.

230. On March 29, 2019, the examiner issued another Notice of Allowance for the application that issued as the ’595 patent.

231. Instead of paying the issue fee, on July 1, 2019, Netlist filed another request for continued examination that, among other things, again amended the claims of the application that issued as the ’595 patent.

232. On August 9, 2019, the examiner issued another Notice of Allowance for the application that issued as the ’595 patent.

233. Netlist paid the issue fee on August 16, 2019.

234. Shortly before and during the period of time that Netlist was amending the claims in the application that issued as the ’595 patent after they were allowed, Netlist and SK hynix exchanged contentions and submitted extensive briefing in the then-pending ITC Investigation (*In re Certain Memory Modules*, 337-TA-1089) addressing arguments that DDR4 memory modules do not infringe the ’623 patent claims, as the ITC ultimately ruled.

4. SK hynix’s IPRs Against the ’623, ’218 and ’595 Patents

235. As noted, on December 14, 2017, SK hynix filed an IPR petition against the ’623 patent asserting that Hazelzet, alone or in combination with, for instance, Buchmann, Talbot or Amidi, rendered all the claims of the ’623 patent unpatentable. *See* IPR2018-00303, Paper No. 1.

236. The PTAB instituted that IPR and, on March 21, 2019, issued FWDs finding all claims of the ’623 patent unpatentable in view of, for instance, Hazelzet in combination with Buchmann. *See* IPR2018-00303, Paper No. 42.

237. In general, the PTAB found that Hazelzet discloses the claimed details of a memory module with a normal mode of operation utilizing parity error checking and notifying the system memory control of those parity errors via an open-drain output, and found that Buchmann rendered obvious adding a training mode to Hazelzet’s memory modules and notifying the system memory control about the execution and/or completion of that training via Hazelzet’s open-drain output.

238. At least pursuant to Netlist’s apparent view of the claims, the claims of the ’218 and ’595 patents claim patentably indistinct alleged inventions compared to the ’623 patent claims, as illustrated, for example, by Netlist’s filing of terminal disclaimers for the ’218 and ’595

patents over the ’623 patent and patents for which Netlist filed terminal disclaimers for the ’623 patent.

239. On June 9, 2020, SK hynix filed IPR petitions against the ’218 and ’595 patents asserting that Hazelzet in combination with either Buchmann or the JEDEC Committee Letter Ballot sent to committee members in November 2009 with the subject “LRDIMM DDR3 Memory Initialization Chapter Proposal” (Ex. P) rendered all the claims of the patents unpatentable, either by themselves or in combination with another reference for certain dependent claims. *See* IPR2020-01042 (’595 IPR); IPR-2020-01044 (’218 IPR).

240. In general, those petitions argue that Hazelzet discloses the claimed details of a memory module with a normal mode of operation utilizing parity error checking and notifying the system memory control of those parity errors via an open-drain output, and that Buchmann or Exhibit P render obvious adding a training mode to Hazelzet’s memory modules and notifying the system memory control about the execution and/or completion of that training via Hazelzet’s open-drain output.

241. On December 17, 2020, the PTAB instituted the IPRs filed against the ’218 and ’596 patents as to all challenged claims. *See* IPR2020-01042, Paper No. 14; IPR2020-01044, Paper No. 13.

C. Netlist’s Failure to Disclose the Presentations from the June 4, 2009 JEDEC JC-40 Meeting Attended by Hyun Lee, and False Portrayal of Hyun Lee as a Sole Inventor

242. At least according to Netlist’s characterizations of the inventive aspects of the disclosure and claims of the ’218 and ’595 patents, the June 4, 2009 presentation by Inphi entitled “MB Initialization sequence Item 142.35” that was presented to the members of JEDEC at a JEDEC committee meeting on June 4, 2009 (Ex. R), and June 4, 2009 presentation by IDT, Texas Instruments, Montage Technology and Inphi entitled “Memory Buffer Membist for

LRDIMM DDR3 MB TG item # 142.43" that was presented to the members of JEDEC at a JEDEC committee meeting on June 4, 2009 (Ex. S), disclose the key allegedly inventive aspects of the claims of the '218 and '595 patents.

243. Even though at least Hyun Lee was present at the JEDEC meeting at which those presentations were made, witnessed those presentations, and was present for the discussions that occurred about them, and immediately thereafter drafted the provisional application to which the '218 and '595 patents claim priority, on information and belief, no Netlist Individuals Substantively Involved in the '218 and '595 Patent Prosecutions disclosed either of those presentations to the examiner of the applications that issued as the '218 and '595 patents.

244. Those presentations are printed publications under 35 U.S.C. § 102 as of June 4, 2009, and are not cumulative of other art or information before the examiner of the applications that issued as the '218 and '595 patents.

245. Those presentations also illustrate that Hyun Lee, and at least some of the other Netlist Individuals Substantively Involved in the '218 and '595 Patent Prosecutions, falsely portrayed Hyun Lee as the sole inventor of the alleged inventions claimed in the '218 and '595 patents. At a minimum, those presentations illustrate that Hyun Lee derived at least portions of the allegedly inventive aspects of the claimed inventions from others in attendance at the June 4, 2009 meeting, who made those presentations on behalf of Inphi, IDT, Montage and TI.

246. The Patent Office would not have allowed at least one claim of each of the '218 and '595 patents to issue had it been aware of those presentations, at least because it would have found the claims obvious over those presentations (either in combination with the knowledge of one of ordinary skill, in combination with art disclosing the basic architecture and functionality of DDR2 and DDR3 RDIMMs of the time, and/or in combination with Hazelzet), that there are

joint inventors that were not properly named on the applications that issued as the ’218 and ’595 patents, and/or that the alleged inventions claimed therein had been derived in whole or in part from another.

247. On information and belief, Netlist Individuals Substantively Involved in the ’218 and ’595 Patent Prosecutions, including without limitation Hyun Lee, specifically intended to deceive the Patent Office into believing that Hyun Lee was the sole inventor of the ’218 and ’595 patents, and/or that the claims of those patents are otherwise patentable, by withholding those presentations from the patent examiner during prosecution of the applications that issued as the ’218 and ’595 patents.

D. Netlist’s Failure to Disclose Hazelzet, Buchmann, Talbot and/or Amidi During the Prosecution of the ’218 Patent

248. At least by December 14, 2017, the day after the Patent Office issued an issue notice for the application that issued as the ’218 patent, Netlist Individuals Substantively Involved in the ’218 and ’595 Patent Prosecutions, including at least Jamie Zheng, knew of the prior art references by Hazelzet, Buchmann, Talbot, and/or Amidi, and SK hynix’s detailed explanations (set forth in its IPR petition) as to why those references rendered the claims of the ’623 patent, that Netlist admitted were patentably indistinct from the then-pending claims of the ’218 patent application, unpatentable. On information and belief, Netlist Individuals Substantively Involved in the ’218 and ’595 Patent Prosecutions, including at least Jamie Zheng, recognized the materiality of the Hazelzet, Buchmann, Talbot and/or Amidi references to the then-pending claims of the application that issued as the ’218 patent.

249. Netlist could have withdrawn the ’218 patent application from issuance and submitted SK hynix’s IPR petition and art, but, on information and belief, chose not to do so because it wanted the ’218 patent to issue so that it could attempt to add it to assert it in litigation,

including its on-going ITC investigation seeking to exclude DDR4 memory modules, as it subsequently tried to do.

250. Rather than submitting the IPR petition and art to the Patent Office, Netlist instead filed the application that eventually issued as the ’595 patent between the time the ’623 patent IPR petition was filed and the date on which the ’218 patent issued.

251. Hazelzet, Buchmann, Talbot, and/or Amidi are not cumulative of other art or information before the examiner of the application that issued as the ’218 patent.

252. The Patent Office would not have allowed at least one claim of the ’218 patent to issue had it been aware of Hazelzet, Buchmann, Talbot, and/or Amidi, at least because it would have found a claim obvious over that art, consistent with the PTAB’s FWD in the ’623 patent IPR.

253. On information and belief, Netlist Individuals Substantively Involved in the ’218 and ’595 Patent Prosecutions, including at least Jamie Zheng, specifically intended to deceive the Patent Office into believing that the claims of the ’218 patent were patentable, and intended to induce the Patent Office into promptly issuing those claims so that the ’218 patent could be added to the 1089 ITC Investigation, by withholding that art from the examiner during prosecution of the applications that issued as the ’218 and ’595 patents.

E. Netlist’s Failure to Disclose Drafts/Ballots for DDR3 LRDIMM Specifications

254. At least by November 2009, on information and belief, Hyun Lee knew of, by virtue for instance his attendance at JEDEC meetings, the Committee Letter Ballot sent to JC-40 committee members in November 2009 with the subject “LRDIMM DDR3 Memory Initialization Chapter Proposal” (Ex. P), and the Committee Letter Ballot sent to JC-40 committee members in November 2009 with the subject “DDR3 LRDIMM Design Specification Body” (Ex. Q).

255. As explained in the IPR petitions filed against the ’218 and ’595 patents, the claims of the ’218 and ’595 patents are not entitled to claim priority to the June 12, 2009 provisional application, making the ballots marked as Exhibits P and Q prior art to both patents. *See* IPR2020-01042, Paper No. 1 (’595 IPR); IPR-2020-01044, Paper No. 1 (’218 IPR).

256. The ballots marked as Exhibits P and Q are not cumulative of other art or information before the examiner of the applications that issued as the ’218 and ’595 patents.

257. When voting on the ballots marked as Exhibits P and Q, Netlist abstained from voting and indicated that it held intellectual property that may be relevant to the subject matter, presumably the June 12, 2009 provisional application that Hyun Lee had hurriedly drafted and filed after he attended the June 4, 2009 JEDEC meeting discussed above.

258. The Patent Office would not have allowed at least one claim of each of the ’218 and ’595 patents to issue had it been aware of the ballots marked as Exhibits P and Q, at least because it would have found a claim obvious over that art in combination with Hazelzet consistent with the PTAB’s FWD in the ’623 patent IPR, as explained in the IPR petitions filed against the ’218 and ’595 patents.

259. On information and belief, Netlist Individuals Substantively Involved in the ’218 and ’595 Patent Prosecutions, for instance at least Hyun Lee, recognized the materiality of that art and specifically intended to deceive the Patent Office into believing that the claims of the ’218 and ’595 patents are patentable by withholding that art from the examiner during prosecution of the applications that issued as the ’218 and ’595 patents, and/or Netlist Individuals Substantively Involved in the ’218 and ’595 Patent Prosecutions, for instance at least Noel Whitley and/or Jamie Zheng, specifically intended to deceive the Patent Office into believing that the claims of the ’218 and ’595 patents are patentable by foregoing presenting the pending claims in the applications to

Hyun Lee and/or electing not to ask Hyun Lee for relevant, material art, such that they could forego submitting such art to the examiner during prosecution of the applications that issued as the ’218 and ’595 patents.

F. Netlist’s Failure to Disclose the JESD82-29 Specification and/or Drafts/Ballots Thereof

260. At least by November 2009, on information and belief, Hyun Lee knew, at least by virtue of his attendance at JEDEC meetings, of JESD82-29, dated December 2009 (Ex. N), and, by at least June 4, 2009, knew of a draft of that specification dated May 2009 on its cover with notes in the headers of its pages that it was last edited June 4, 2009 5:43 am (Ex. O).

261. As explained in the IPR petitions filed against the ’218 and ’595 patents, the claims of the ’218 and ’595 patents are not entitled to claim priority to the June 12, 2009 provisional application, making JESD82-29, marked as Exhibit N, prior art to both patents. The draft of the same, marked as Exhibit O, is prior art regardless as it was publicly available before the provisional application was filed.

262. JESD82-29 and the draft thereof marked as Exhibits N and O are not cumulative of other art or information before the examiner of the applications that issued as the ’218 and ’595 patents.

263. The Patent Office would not have allowed at least one claim of each of the ’218 and ’595 patents to issue had it been aware of JESD82-29 and the draft thereof marked as Exhibits N and O, at least because it would have found a claim obvious over that art in combination with, for instance, Buchmann, consistent with the PTAB’s FWD in the ’623 patent IPR and the arguments in SK hynix’s IPR petitions filed against the ’218 and ’595 patents.

264. On information and belief, Netlist Individuals Substantively Involved in the ’218 and ’595 Patent Prosecutions, for instance at least Hyun Lee, recognized the materiality of

that art and specifically intended to deceive the Patent Office into believing that the claims of the ’218 and ’595 patents are patentable by withholding that art from the examiner during prosecution of the applications that issued as the ’218 and ’595 patents, and/or Netlist Individuals Substantively Involved in the ’218 and ’595 Patent Prosecutions, for instance at least Noel Whitley and/or Jamie Zheng, specifically intended to deceive the Patent Office into believing that the claims of the ’218 and ’595 patents are patentable by foregoing presenting the pending claims in the applications to Hyun Lee and/or electing not to ask Hyun Lee for relevant, material art such as Exhibits N and O, such that they could forego submitting such art to the examiner during prosecution of the applications that issued as the ’218 and ’595 patents.

G. Netlist’s Violation of the Estoppel Rules of 37 C.F.R. § 42.73(d)

265. The PTAB, on March 21, 2019, issued an FWD finding all claims of the ’623 Patent unpatentable in view of, for instance, Hazelzet in combination with Buchmann. At least Jamie Zhang received a copy of that FWD the same day it issued.

266. Netlist filed a terminal disclaimer for the ’623 patent over the ’837 patent, and the application that issued as the ’218 patent. Netlist likewise filed a terminal disclaimer for the ’218 patent over the ’837 patent. Netlist likewise filed a terminal disclaimer for the ’595 patent over the ’837 patent, and the ’218 patent. Netlist has thus terminally disclaimed the ’218 and ’595 patents over the ’623 patent because the Patent Office found the claims of the respective patents patentably indistinct from each other, and Netlist chose not to contest those findings.

267. Netlist Individuals Substantively Involved in the ’218 and ’595 Patent Prosecutions, including at least Jamie Zheng, were, on information and belief, aware of 37 C.F.R. § 42.73 when prosecuting the application that issued as the ’595 patent.

268. Despite the issuance of the FWD finding the ’623 patent claims unpatentable on March 21, 2019, which constitutes a “judgment” per 37 C.F.R. § 42.73(a), on

information and belief, Netlist continued prosecuting the application that issued as the '595 patent, submitting multiple Requests for Continued Examination and eventually paying the issue fee. All those actions are in violation of the estoppel provisions of 37 C.F.R. § 42.73(d), are *per se* material, and constitute affirmative acts of egregious misconduct.

269. But for Netlist's violation of those estoppel provisions, the Patent Office would not have issued the '595 patent.

270. On information and belief, Netlist Individuals Substantively Involved in the '218 and '595 Patent Prosecutions, such as Jamie Zheng, specifically intended to deceive the Patent Office into issuing the '595 patent by failing to abide by the estoppel provisions of 37 C.F.R. § 42.73(d).

* * * *

271. Inequitable Conduct: Any one or more acts set forth above are sufficient in and of itself/themselves to demonstrate that Netlist committed inequitable conduct during the prosecution of the '218 and '595 patents that renders the '218 and '595 patents unenforceable. To the extent any particular act is only found sufficient to support a finding of inequitable conduct as to one of the '218 and '595 patents, the doctrine of infectious unenforceability renders the other patent unenforceable as well.

272. Unclean Hands: Furthermore, any one or more acts set forth above are sufficient in and of itself/themselves demonstrated that Netlist has unclean hands in relation to its assertion of the '218 and '595 patents that renders the '218 and '595 patents unenforceable. To the extent any particular act is only found sufficient to support a finding of unclean hands as to one of the '218 and '595 patents, the doctrine of infectious unenforceability renders the other patent unenforceable as well.

COUNT VII
(Declaration of Unenforceability of the '912 Patent Due to Inequitable Conduct & Unclean Hands)

273. Samsung restates and incorporates by reference the preceding paragraphs as if fully set forth herein.

A. Netlist Individuals Substantively Involved in the '912 Reexamination

274. On information and belief, at least the following people associated with Netlist were substantively involved in the *inter partes* reexamination proceedings with respect to the '912 patent: Gail Sasaki, Mehran Arjomand, and David S. Kim (collectively "Netlist Individuals Substantively Involved in the '912 Patent Reexamination").

275. On information and belief, Gail Sasaki was, during the reexamination proceedings for the '912 patent, an employee and/or contractor for Netlist who signed the power of attorney appointing counsel of record to prosecute the reexamination proceeding on behalf of Netlist.

276. Mehran Arjomand and David S. Kim served as counsel of record for Netlist in connection with the *inter partes* reexamination proceedings for the '912 patent.

277. On information and belief, the Netlist Individuals Substantively Involved in the '912 Patent Reexamination withheld information that they knew to be material to the patentability of the '912 patent with the specific intent to deceive the Patent Office in order to secure allowance of certain amended claims.

278. On information and belief, each of the Netlist Individuals Substantively Involved in the '912 Reexamination is an individual associated with the prosecution of the '912 patent during the *inter partes* reexamination proceedings, which ultimately led to the issuance of an *Inter Partes* Reexamination Certificate on February 8, 2021.

B. Netlist Made Narrowing Amendments to Claims During Reexamination

279. The '912 patent was originally filed in the United States on September 27, 2007 by inventors Jayesh R. Bhakta and Jeffrey C. Solomon. The '912 patent, titled "Memory Module Decoder," issued on November 17, 2009. Netlist claims to own all rights, title, and interest in the '912 patent.

280. On April 20, 2010, a first request for *inter partes* reexamination of claims 1–51 of the '912 patent was filed by third party requester Inphi. The Patent Office assigned this request control No. 95/001,339 ("'339 proceeding") and ultimately ordered the reexamination of claims 1–51 of the '912 patent on September 1, 2010.

281. On October 20, 2010, a second request for *inter partes* reexamination of claims 1, 6, 3–4, 6–11, 15, 18–22, 24–25, 27–29, 31–34, 36–39, 41–45, and 50 of the '912 patent was filed by third party requester SMART Modular Technologies (WWH), Inc. ("SMART"). The Patent Office assigned this request control No. 95/000,578 ("'578 proceeding") and ordered reexamination of claims 1, 3–4, 6–11, 15, 18–22, 24–25, 27–29, 31–34, 36–39, 41–45, and 50 of the '912 patent on January 14, 2011.

282. On October 21, 2010, a third request for *inter partes* reexamination of claims 1, 3–4, 6–11, 15, 18–22, 24–25, 27–29, 31–34, 36–39, 41–45, and 50 of the '912 patent was filed by Google. The Patent Office assigned this request control No. 95/000,579 ("'579 proceeding") and ordered reexamination of claims 1, 3–4, 6–11, 15, 18–22, 24–25, 27–29, 31–34, 36–39, 41–45, and 50 of the '912 patent on January 18, 2011.

283. The Examiner in the '578, '579, and '339 proceedings agreed with Inphi, SMART, and Google that the proposed combination of Micron, DDR SDRAM RDIMM, MT36VDDF12872 & MT36VDDF28672 Data Sheet, 2002 ("Micron") in view of U.S. Patent Application Publication No. 2006.0117152 ("Amidi") presented a substantial new question of

patentability and that "a reasonable examiner would consider the teaching of Micron and Amidi important in deciding the patentability of" the challenged claims. *See* January 14, 2011 Reexamination Ordered.

284. On February 25, 2011, the PTO *sua sponte* merged the '578, '579, and '339 proceedings into a single matter, as all three proceedings were pending, had yet to be terminated, and involved overlapping claims of the same patent.

285. After the merger, Netlist argued against the pending rejections of the existing claims and added new claims 52–118. *See* Netlist's July 5, 2011 Response to Office Action in *Inter Partes* Reexamination Communication Mailed April 4, 2011. For example, Netlist argued that the phase-lock loop device disclosed in Amidi was not "operatively coupled" to its CPLD. Netlist narrowed the scope of the "operatively coupled" feature by arguing that in the context of the '912 patent the phrase means that "the operations of the logic element 40 are clocked either directly or indirectly (e.g., through a clock buffer) by the output of the PLL 50" and that "the output of the PLL 50 controls the operation of the logic element 40."

286. Google responded by explaining how Micron and Amidi rendered obvious both the original and new claims. *See* August 29, 2011 Response. Google also explained how Micron, Amidi, U.S. Patent No. 5,926,827 ("Dell 2"), and Double Data Rate (DDR) SDRAM Specification, JEDEC Standard No. 79C, March 2003 ("JEDEC 79C") rendered obvious the new claims. *Id*. The Examiner adopted some aspects of the grounds raised by Google, rejected other aspects, and declined to adopt other grounds. *See* October 14, 2011 Non-Final Office Action. Netlist responded by canceling some of its claims, amending most of the remaining claims, and adding new claims 119–136. *See* January 14, 2012 Netlist's Response After Non-Final Action. Google again respondedby continuing to argue, among other things, that Micron, Amidi, Dell 2,

and/or JEDEC 79C rendered obvious a set of the pending claims. *See* February 23, 2012 Google's Response.

287. The Examiner then adopted additional grounds for rejection and maintained certain earlier rejections. *See* November 13, 2012 Non-Final Action. Netlist responded by canceling certain claims, further amending other claims, and arguing against the rejections. *See* January 14, 2013 Netlist's Response After Non-Final Action. Google again explained why various combinations of Micron, Amidi, Dell 2, and JEDEC 79C (among other references) rendered the claims obvious. *See* February 13, 2013 Google's Response.

288. The Examiner issued an Action Closing Prosecution, which maintained several rejections, withdrew others, and found certain rejections moot due to Netlist canceling certain claims. *See* March 21, 2014 Action Closing Prosecution. The Examiner issued a Right of Appeal Notice, and Google appealed the Examiner's unadopted portions of certain grounds. *See* July 18, 2014 Google's Notice of Appeal. Netlist cross-appealed on the grounds of rejection the Examiner maintained. *See* July 30, 2014 Netlist's Notice of Cross Appeal.

289. The PTAB, in its first appeal decision, affirmed the Examiner's adoption of certain aspects of the ground involving Micron in view of Amidi, reversed the Examiner's refusal to adopt other aspects of this ground, reversed the Examiner's refusal to adopt the ground involving Micron in view of Amidi and Olarig, and declined to reach the merits on the ground involving Micron in view of Amidi, Dell 2, and JEDEC 79C. *See* June 6, 2016 Decision on Appeal.

290. Netlist then requested that the PTO reopen prosecution, canceling certain claims and amending most of the remaining claims. *See* July 31, 2016 Netlist's Response Requesting to Reopen Prosecution.) It was in this set of amendments in which Netlist amended claim 1 and several other claims to include the following language:

- "wherein, in response to signals received from the computer system, the phase-lock loop (PLL) device transmits a PLL clock signal to the plurality of DDR memory devices, the logic element, and the register" ("PLL device limitation");

- "wherein, the register (i) receives, from the computer system, and (ii) buffers, in response to the PLL clock signal, a plurality of row/column address signals and the bank address signals, and (iii) transmits the buffered plurality of row/column address signals and the buffered bank address signals to the plurality of DDR memory devices" ("register limitation"); and

- "wherein the logic element generates gated column access strobe (CAS) signals or chip-select signals of the output control signals in response to at least in part to (i) the at least one row address signal, (ii) the bank address signals, and (iii) the at least one chip-select signal of the set of input control signals and (iv) the PLL clock signal." ("logic element limitation").

291. Netlist asserted that these three amendments were "principal amendments to overcome the new grounds of rejection" and further stated that "[t]o address the Board's rejection, Patent Owner *narrowed* the claim to include" the above identified three amendments. *Id*. (emphasis added). Netlist then referenced the above identified "claim amendments [to] highlight at least two differences between the '912 invention and the prior art." *Id*. Below are the two differences that Netlist highlighted to the PTAB:

> First, the claim amendments now require: In response to signals received from the computer system, the phase-lock loop (PLL) device transmit a PLL clock to the plurality of DDR memory devices, the logic element, and the register. Amidi transmits a PLL clock signal to the register and memory, but not the CPLD. Thus, Amidi does not disclose the PLL device transmitting the PLL clock to the logic element; the output of PLL 606 is neither directly nor indirectly transmitted to the CPLD 604. Additionally, a POSITA would not be motivated or inclined to transmit the PLL clock to CPLD 604.
>
> Second, the amended claims now also require that the logic element generates certain output signals (e.g., gated column access strobe (CAS) signals or chip-select signals recited in claim 1) in response to at least in part to (i) the at least one row address signal, (ii) the bank address signals, and (iii) the at least one chip-select signal of the set of input control signals and (iv) the PLL clock signal. Amidi's CPLD 604 never receives bank address signals and hence Amidi's control signals cannot be generated based on bank

> address signals. Instead, the control signals (rcs0a, rcs0b, rcs1a, rcs1b, rcs2a, rcs2b, rcs3a, and rcs3b) are based on the row address signals and chip-select signals. Thus, Amidi does not disclose the CPLD generating the gated CAS signals or chip-select signals in response to *the bank address signals*. Moreover, since the output of PLL 606 is neither directly nor indirectly transmitted to the CPLD 604, a POSITA would understand that the PLL clock does not control the operation of CPLD 604. Thus, Amidi is further deficient by failing to disclose the CPLD generating the gated CAS signals or chip-selected signals in response to the *PLL clock signal*.
>
> *Id*. (emphasis in original) (internal citations omitted).

292. Netlist went on to further explain how the specific amendments above were the distinguishing factors over Amidi:

> As amended, the claims require that the *logic element receives* at least one row address signal and *bank address signals*, and require that the *register* (i) *receives*, from the computer system, and (ii) buffers, in response to the PLL clock signal, a plurality of row/column address signals and *the bank address signals*, and (iii) transmit the buffered plurality of DDR memory devices. The claims also require the plurality of row/column address signals received by the register are separate from the at least one row address signal received by the logic element. In other words, in the confirmation recited by the claims, the bank address signals are received by the logic element, the register and the plurality of memory devices. Under such circumstances, Amidi does not use bank address signals to generate control signals (and certainly not the bank address signals and the at least one row address signal.) The claims, however, require generating CAS signals or chip-select signals based on a row address signal and bank address signals.
>
> Based on the above, it would not be obvious to a POSITA to combine Amidi and Dell 2 to reach the claimed invention, as amended. For the sake of argument, however, even the proposed combination of Amidi and Dell 2 fails to disclose the claimed invention. Therefore, even in combination, Amidi in view of Dell 2 fails to disclose all of the claim recitations of the claims.

Id. (emphasis in original) (internal citations omitted).

293. Following Google's response to Netlist's amendments and response, the PTAB remanded the case to the Examiner and the Examiner maintained the PTAB's new grounds

of rejection as well as one additional ground. *See* October 3, 2017 Examiner's Determination Under 37 C.F.R. § 41.77(d).

294. The PTAB then issued its second appeal decision, affirming several prior rejections but withdrawing many of the rejections the PTAB and the Examiner had previously maintained. *See* July 27, 2018 Decision on Appeal. The withdrawn rejections corresponded to the combination of Micron in view of Amidi and Micron in view of Amidi and Olarig. *Id*. Google sought rehearing, which the PTAB denied. *See* January 31, 2019 Decision on Rehearing. Google then appealed the PTAB's decision to the Federal Circuit.

295. In its responsive appeal brief to the Federal Circuit, Netlist repeatedly stated that "it *narrowed* its claims to define its precise inventive contributions over the prior art." December 12, 2019 Netlist Response Brief (emphasis added). Therefore, in statements to the PTAB and the Federal Circuit, Netlist reiterated that the amendments identified above are *narrowing*, and that it was these narrowing amendments that were Netlist's basis for arguing that the prior art at issue does not disclose the asserted claims. It was in response to these statements that the PTAB withdrew its rejections of the asserted claims and the Federal Circuit affirmed the PTAB's decision on June 15, 2020.

296. The *Inter Partes* Reexamination Certification for the '912 patent issued on February 8, 2021.

C. After the Claims Issued with the Narrowing Amendments, Netlist Argued in Litigation that the Amendments Did Not Change the Scope of the Claims

297. After the *Inter Partes* Reexamination Certification for the '912 patent issued on February 8, 2021, Netlist resumed its litigation against Google.

298. On information and belief, Gail Sasaki is involved in overseeing Netlist's litigation against Google.

299. On July 30, 2021, Google filed a Motion for Summary Judgment on the Issue of Absolute Intervening Rights. *See Netlist, Inc. v. Google LLC*, No. 4:09-cv-05718-SBA, D.I. 155.

300. On September 3, 2021, Netlist filed its Opposition to Google's Motion for Summary Judgement on the Issue of Absolute Intervening Rights. *See id.*, D.I. 196. In the opposition, Netlist argued, in direct contradiction to what it argued to the PTAB and the Federal Circuit during reexamination proceedings, that the above identified claim amendments were not narrowing. Instead, Netlist now argues that "the language added during reexamination clarified what was inherent in the original claims." D.I. 196 at 17; *see also id*. at 16–24.

301. If the above identified amendments were in fact inherent, as Netlist now contends to overcome intervening rights, then Netlist knowingly misled the PTAB and the Federal Circuit when it distinguished the amended claims from the prior art during reexamination.

302. Had the PTAB and the Federal Circuit known that the amendments were in fact not "narrowing" but instead just "made express the inherent functions of the [original limitation]," the PTAB and the Federal Circuit would have found these claims obvious and not allowed them to issue. For example, if the newly added functions were inherent in the original claim limitation, as Netlist now contends, these functions also would have been inherent in the prior art, thus rendering the claims obvious and invalid.

303. On information and belief, Netlist Individuals Substantively Involved in the '912 Patent Reexamination knowingly misrepresented the amendments in its arguments to the PTAB and the Federal Circuit. Netlist Individuals Substantively Involved in the '912 Patent Reexamination had a duty of candor and good faith in dealing with the PTAB and the Federal Circuit during reexamination of the '912 patent. That duty of candor and good faith included a

duty to disclose to the PTAB and the Federal Circuit its intention not to narrow the claims at all in order to distinguish the prior art. Instead, Netlist Individuals Substantively Involved in the '912 Patent Reexamination chose to tell both the PTAB and the Federal Circuit the opposite to convince the PTAB and the Federal Circuit to allow the claims. This information is material to the patentability of the claims. By misrepresenting the intended effect of the above identified amendments to the claims to the PTAB and the Federal Circuit, Netlist Individuals Substantively Involved in the '912 Patent Reexamination breached its duty of candor and good faith and showed specific intent to deceive the PTAB and the Federal Circuit.

* * * *

304. Inequitable Conduct: Any one or more acts set forth above are sufficient in and of itself/themselves to demonstrate that Netlist committed inequitable conduct during the reexamination of the '912 patent that renders the '912 patent unenforceable.

305. Unclean Hands: Furthermore, any one or more acts set forth above are sufficient in and of itself/themselves to demonstrate that Netlist has unclean hands in relation to its assertion of the '912 patent that renders the '912 patent unenforceable.

COUNT VIII
(Breach of Contract)

306. Samsung restates and incorporates by reference the preceding paragraphs as if fully set forth herein.

307. Under the JEDEC Patent Policy, Netlist has a contractual commitment to offer implementers of the DDR4 Standards, including Samsung, licenses to any Essential Patent Claims (as defined in the JEDEC Patent Policy) on RAND terms and conditions.

308. Netlist submitted Letters of Assurance to the JC40 committee in which Netlist promised to make available to implementers of the DDR4 Standards a license to patents

relating to the ’523, ’595, and ’218 patents “under reasonable terms and conditions that are demonstrably free of any unfair discrimination.” Ex. H (’434 LOA), Ex. I (’837 LOA). Under the JEDEC Patent Policy, those commitments extend to the ’523, ’595, and ’218 patents to the extent they are essential to the DDR4 Standards.

309. On information and belief, Netlist failed to specifically disclose the ’912 patent as potentially essential to the DDR4 Standards. Notwithstanding this failure, the JEDEC Patent Policy requires Netlist, as a member of or participant in the committee that developed the DDR4 Standards, to license the ’912 patent on RAND terms to the extent it is essential to those Standards.

310. The JEDEC Patent Policy and/or Letters of Assurance constitute a valid and binding contract between Netlist and JEDEC.

311. Samsung is a third-party beneficiary to the JEDEC Patent Policy and/or Letters of Assurance, and to Netlist’s RAND obligations thereunder. Participation in JEDEC committees and the standard-setting process is expressly conditioned on a commitment to license essential patents to third-party implementers on RAND terms. Ex. G (JEDEC Manual No. 21T) § 8.2.2.1. The JEDEC Patent Policy is therefore intended to benefit third-party implementers of JEDEC standards, such as Samsung, and the obligations under the JEDEC Patent Policy, including the RAND obligations, are intended to be enforceable by third-party implementers of the JEDEC standards. Third-party implementers, such as Samsung, are also the only parties who could recover for Netlist’s breach of its obligations under the JEDEC Patent Policy.

312. Samsung has relied on the JEDEC Patent Policy and/or Letters of Assurance, including the RAND obligations set forth therein, in designing, manufacturing, and selling standard-compliant products, including the Samsung DDR4 Memory Modules, and

Samsung has supported the JEDEC standard based on its understanding and expectation that JEDEC members, including Netlist, will abide by their obligations.

313. Netlist and Samsung dispute whether Samsung has a license to Netlist's patents, including the Patents-in-Suit, under the Agreement. Netlist has taken the position that Samsung's license under the Agreement has been terminated. Yet Netlist has failed to offer Samsung a license to patents allegedly essential to the DDR4 Standards, including the Patents-in-Suit, on RAND terms and conditions. To the extent the Patents-in-Suit or any other Netlist patents are essential to any of the DDR4 Standards, Netlist has breached its contractual obligations to license such patents to Samsung on RAND terms and conditions.

314. To the extent the '912 patent is essential to any of the DDR4 Standards, Netlist has also breached its RAND obligations by seeking an injunction against Google in connection with its use of certain Samsung memory modules that are alleged to infringe the '912 patent.

315. As a result of Netlist's breaches of contract, Samsung has been injured in its business or property because it has been denied access to a license to Netlist's claimed SEPs on RAND terms, a license that can only be obtained from Netlist. Samsung's inability to obtain a license to Netlist's SEPs on RAND terms threatens Samsung with imminent loss of customers and potential customers, loss of goodwill and product image, loss of sales, litigation costs, uncertainty in business planning, and uncertainty among customers and potential customers.

JURY DEMAND

316. Samsung demands a jury trial on all issues and claims so triable.

PRAYER FOR RELIEF

WHEREFORE, Samsung prays for judgment and relief as follows:

(a) Declare that Samsung does not directly or indirectly infringe the '523 patent, either literally or under the doctrine of equivalents, and that it is not liable for damages or injunctive relief based on any claim in the '523 patent;

(b) Declare that Samsung does not directly or indirectly infringe the '595 patent, either literally or under the doctrine of equivalents, and that it is not liable for damages or injunctive relief based on any claim in the '595 patent;

(c) Declare that Samsung does not directly or indirectly infringe the '218 patent, either literally or under the doctrine of equivalents, and that it is not liable for damages or injunctive relief based on any claim in the '218 patent;

(d) Declare that Samsung does not directly or indirectly infringe the '912 patent, either literally or under the doctrine of equivalents, and that it is not liable for damages or injunctive relief based on any claim in the '912 patent;

(e) Declare that the '523 patent is unenforceable due to inequitable conduct and unclean hands;

(f) Declare that the '595 patent and '218 patent are unenforceable due to inequitable conduct and unclean hands;

(g) Declare that the '912 patent is unenforceable due to inequitable conduct and unclean hands;

(h) Declare that Netlist is liable for breach of contract;

(i) Grant injunctive relief requiring Netlist to offer a license to the patents it asserts are essential or potentially essential to the JEDEC standards—

including the Patents-in-Suit—on reasonable terms and conditions that are demonstrably free from any unfair discrimination;

(j) Enjoin Netlist from further demanding excessive, non-RAND royalties from Samsung;

(k) Declare that Netlist is barred from seeking and/or enforcing injunctive relief against Samsung (including its affiliates) or its direct or indirect customers and end-users in any jurisdiction with respect to any alleged infringement of any patent essential to JEDEC standards;

(l) Enjoin Netlist from seeking and/or enforcing injunctive relief against Samsung (including its affiliates) or its direct or indirect customers and end-users in any jurisdiction with respect to any alleged infringement of any patents essential to JEDEC standards;

(m) Compensate Samsung for all damages caused by Netlist's breaches of contract, including breaches of its RAND obligations;

(n) Declare that judgment be entered in favor of Samsung and against Netlist on each of Samsung's claims;

(o) Find that this is an exceptional case under 35 U.S.C. § 285;

(p) Award Samsung its costs and attorneys' fees in connection with this action; and

(q) Such further and additional relief as the Court deems just and proper.

MORRIS, NICHOLS, ARSHT & TUNNELL LLP

/s/ Rodger D. Smith II

Jack B. Blumenfeld (#1014)
Rodger D. Smith II (#3778)
1201 North Market Street
P.O. Box 1347
Wilmington, DE 19899
(302) 658-9200
jblumenfeld@morrisnichols.com
rsmith@morrisnichols.com

Attorneys for Plaintiffs

OF COUNSEL:

Brian Nester
COVINGTON & BURLING LLP
One CityCenter
850 Tenth Street, NW
Washington, DC 20001-4956
(202) 662-6000

Alice J. Ahn
COVINGTON & BURLING LLP
Salesforce Tower
415 Mission Street, Suite 5400
San Francisco, CA 94105-2533
(415) 591-6000

October 15, 2021