US006474324B1

(12) **United States Patent**
Despart et al.

(10) **Patent No.: US 6,474,324 B1**
(45) **Date of Patent: Nov. 5, 2002**

(54) **ARCHERY BOWS, ARCHERY BOW CAM ASSEMBLIES, AND ARCHERY BOW ANCHORS**

(75) Inventors: **James Robert Despart**, Stephentown, NY (US); **Terry G. Martin**, Walla Walla, WA (US)

(73) Assignee: **Martin Archery, Inc.**, Walla Walla, WA (US)

(*) Notice: Subject to any disclaimer, the term of this patent is extended or adjusted under 35 U.S.C. 154(b) by 33 days.

(21) Appl. No.: **09/716,027**

(22) Filed: **Nov. 17, 2000**

(51) **Int. Cl.**[7] **F41B 5/10**
(52) **U.S. Cl.** **124/25.6**
(58) **Field of Search** 124/23.1, 25.6, 124/86, 900

(56) **References Cited**

U.S. PATENT DOCUMENTS

5,174,268 A		12/1992	Martin et al.	124/25.6
5,368,006 A		11/1994	McPherson	124/25.6
5,505,185 A		4/1996	Miller	124/25.6
5,623,915 A	*	4/1997	Kudlacek	124/25.6
5,687,703 A	*	11/1997	Vyprachticky	124/25.6
5,697,355 A	*	12/1997	Schaffer	124/25.6
5,782,229 A		7/1998	Evans et al.	124/25.6
5,791,322 A		8/1998	McPherson	124/25.6
5,803,069 A	*	9/1998	Schreiber	124/86
5,890,480 A		4/1999	McPherson	124/25.6
5,947,099 A	*	9/1999	Derus	124/25.6
5,975,067 A		11/1999	Strother	124/25.6

* cited by examiner

Primary Examiner—John A. Ricci
(74) *Attorney, Agent, or Firm*—Wells St. John P.S.

(57) **ABSTRACT**

In one aspect, the invention includes an archery bow having a first limb and a second limb, and a handle between the limbs. A rotating member includes at least two cams rotatably joined to the first limb with a first of the at least two cams having an eccentric profile to provide a first camming surface and a second of the at least two cams having an eccentric profile to provide a second camming surface. The eccentric profile of the first cam is substantially symmetrical relative to the eccentric profile of the second cam. A string extends between the rotating member and second limb.

69 Claims, 14 Drawing Sheets

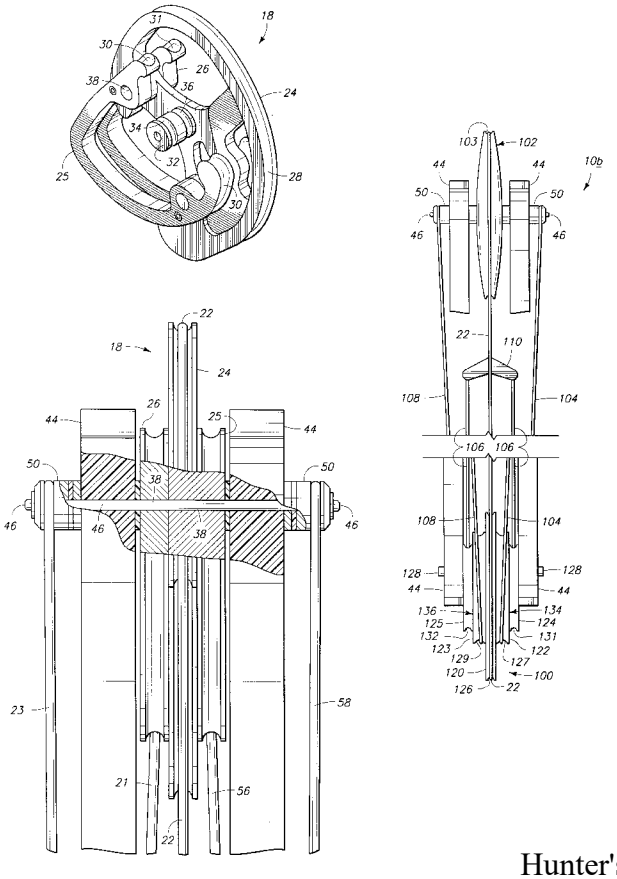

Hunter's Manufacturing Company, Inc.
Ex. 1018

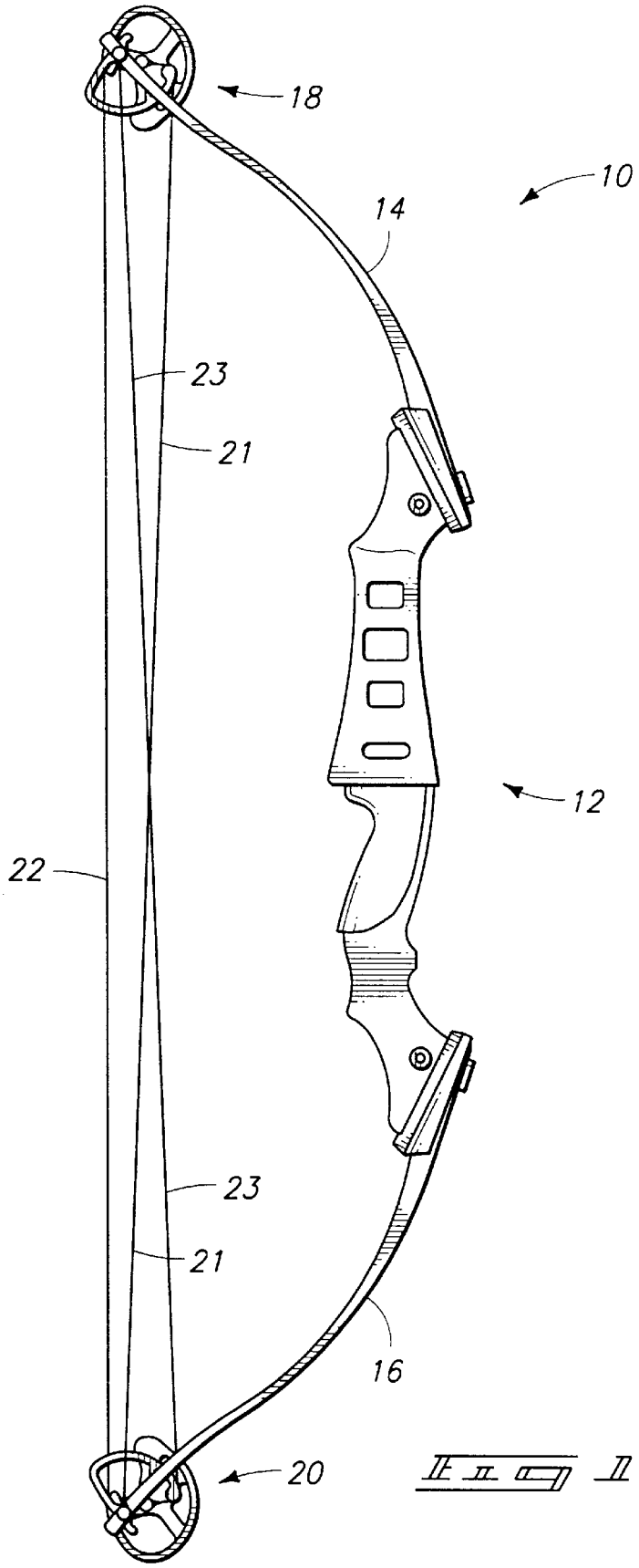

Fig 1

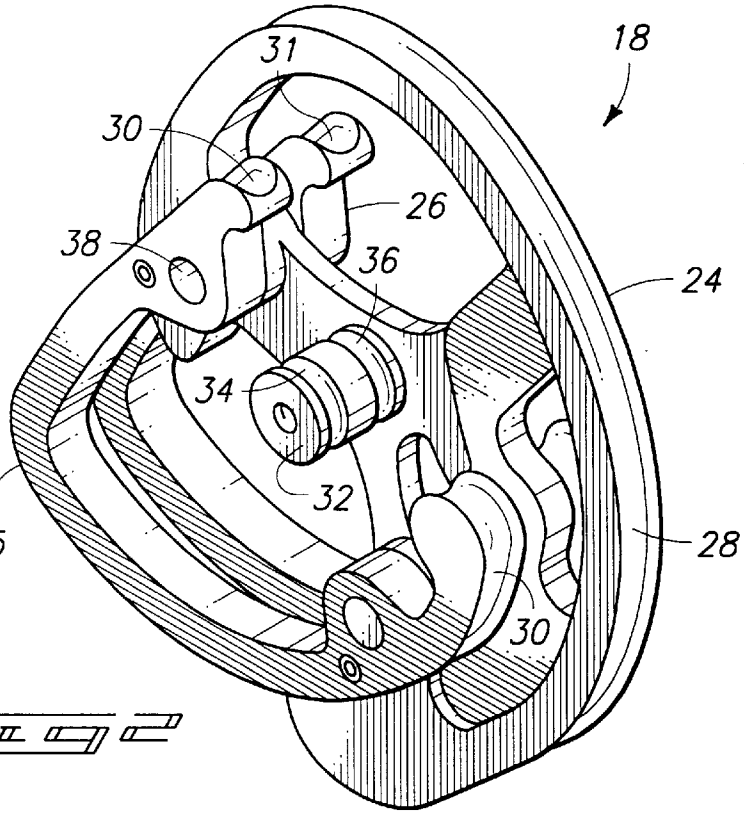

Fig 2

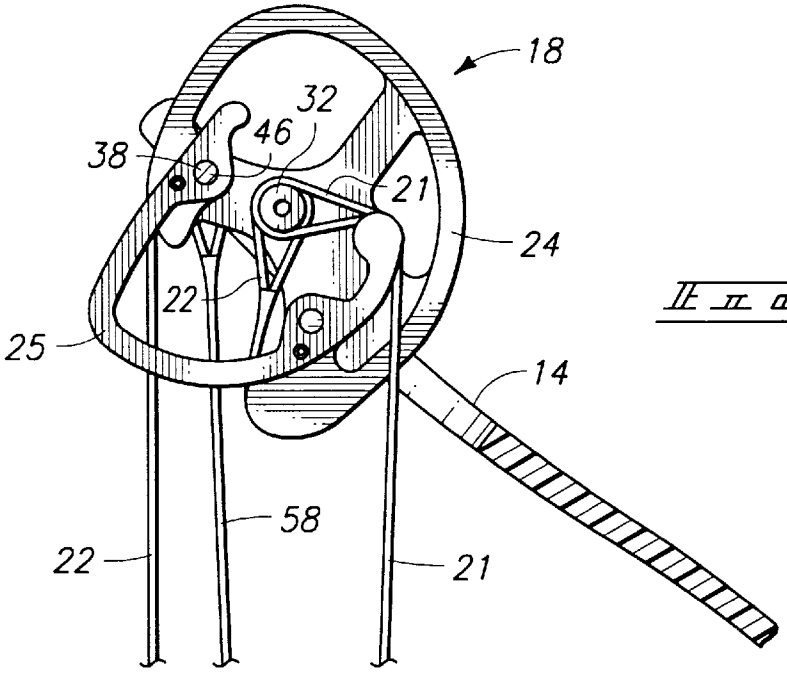

Fig 3

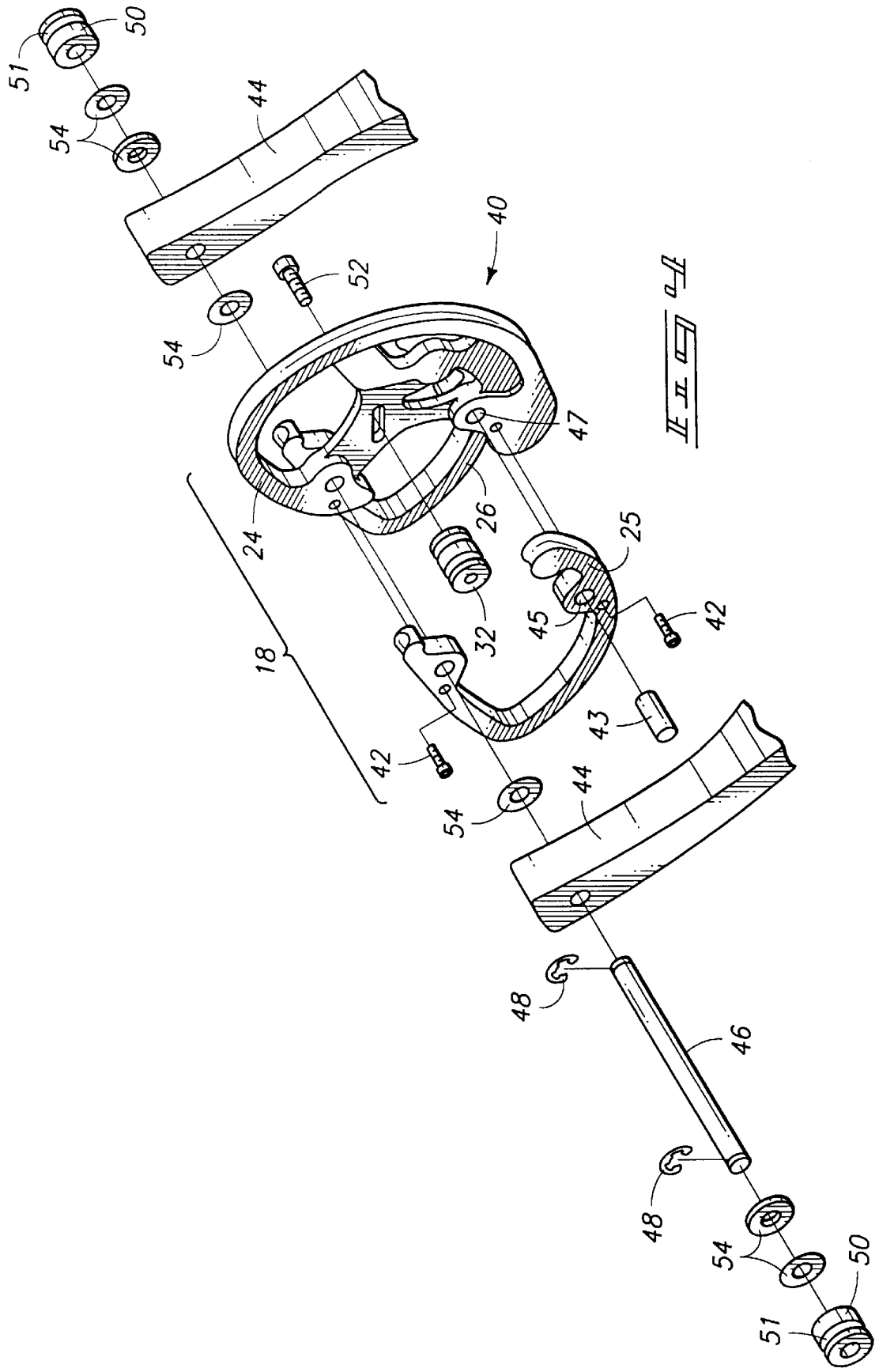
50
51
54
44
40
52
54
47
24
26
25
18
32
45
42
43
42
54
44
48
46
48
54
50
51

Fig. 11

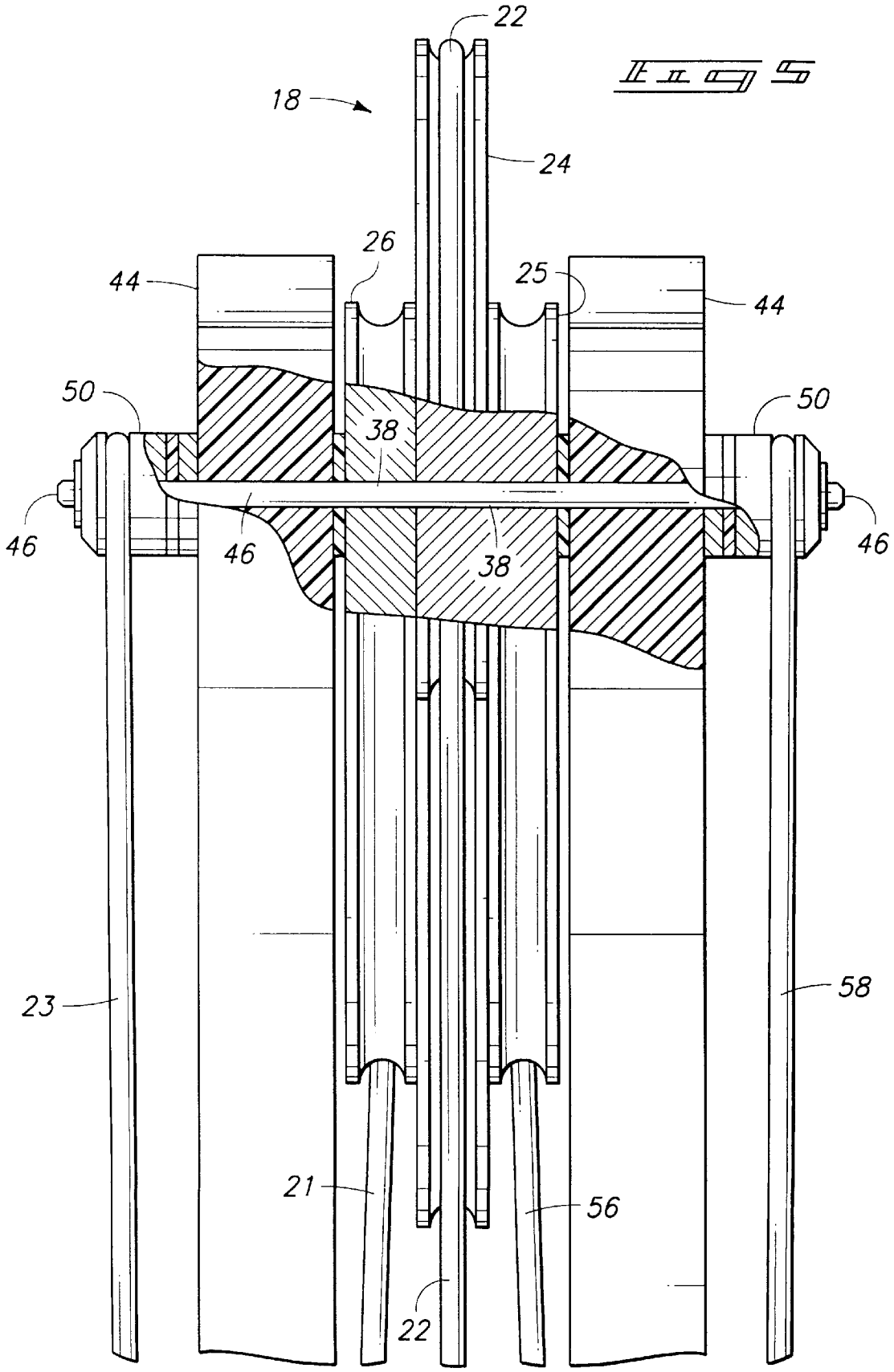
Fig 5
22
18
24
26
25
44
44
50
50
38
46
46
38
46
23
58
21
56
22

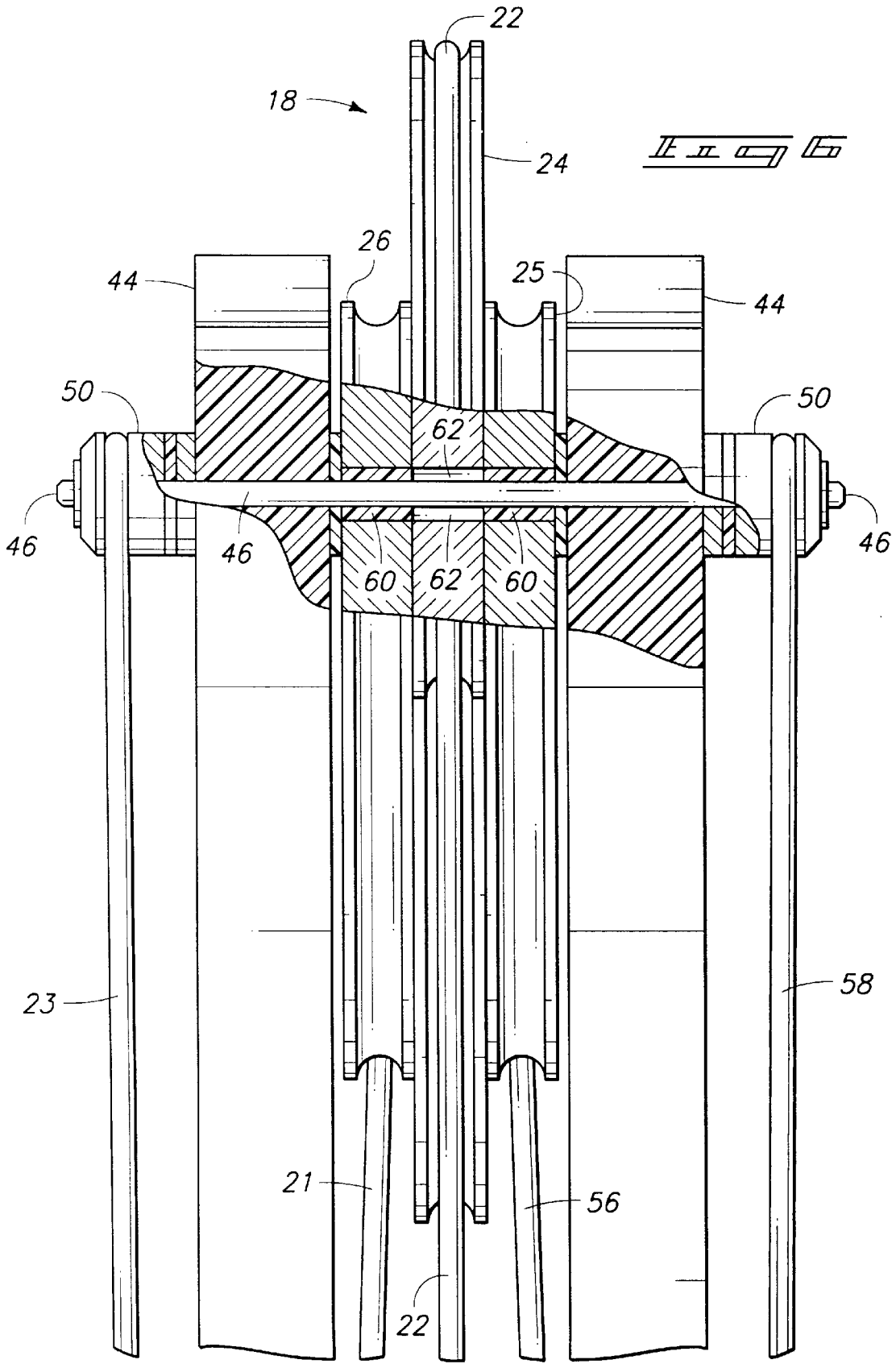
22
18
24
Fig 6
26
25
44
44
50
50
62
46
46
46
60
62
60
23
58
21
56
22

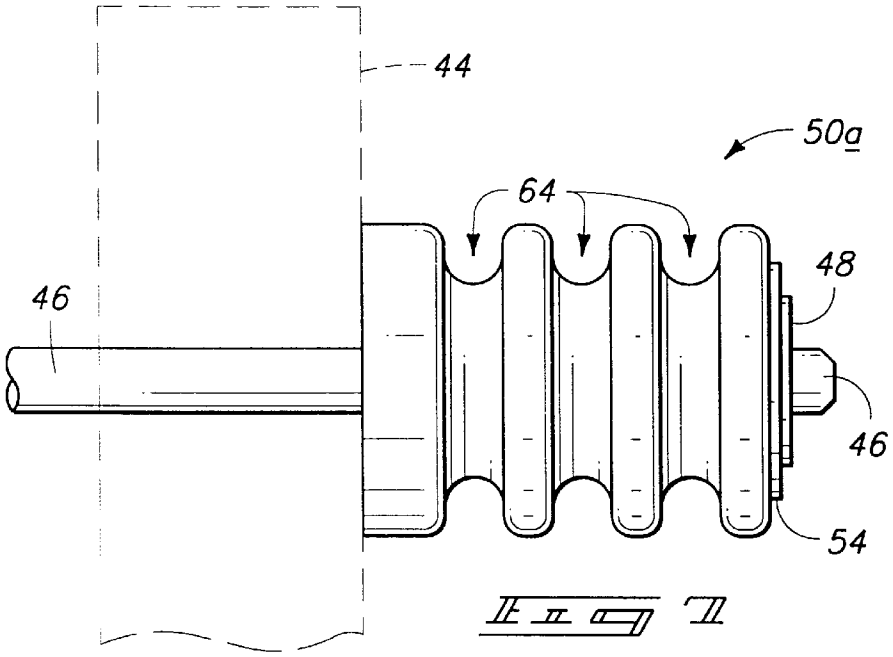

Fig 7

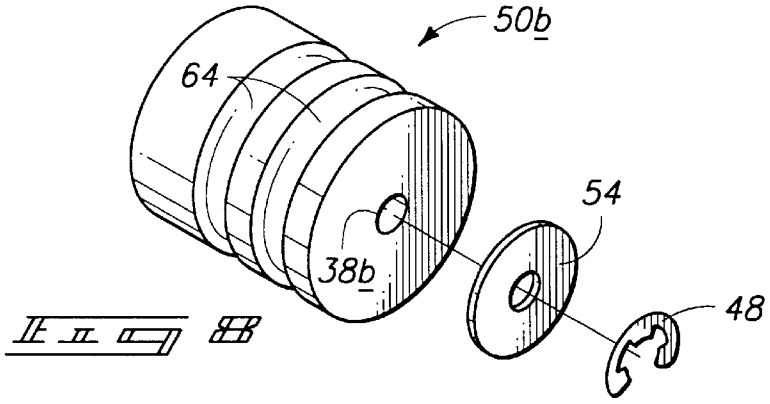

Fig 8

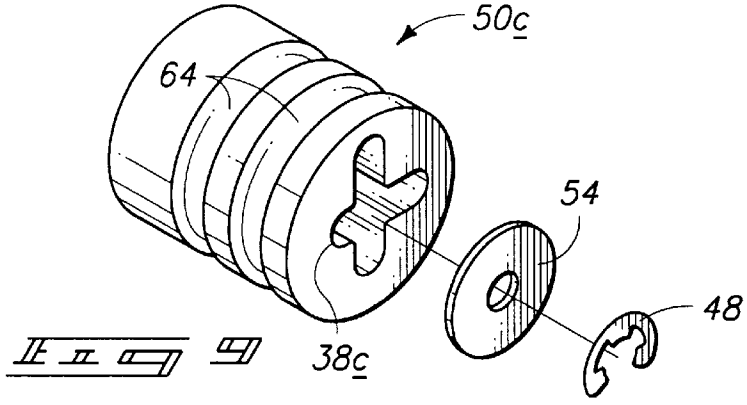

Fig 9

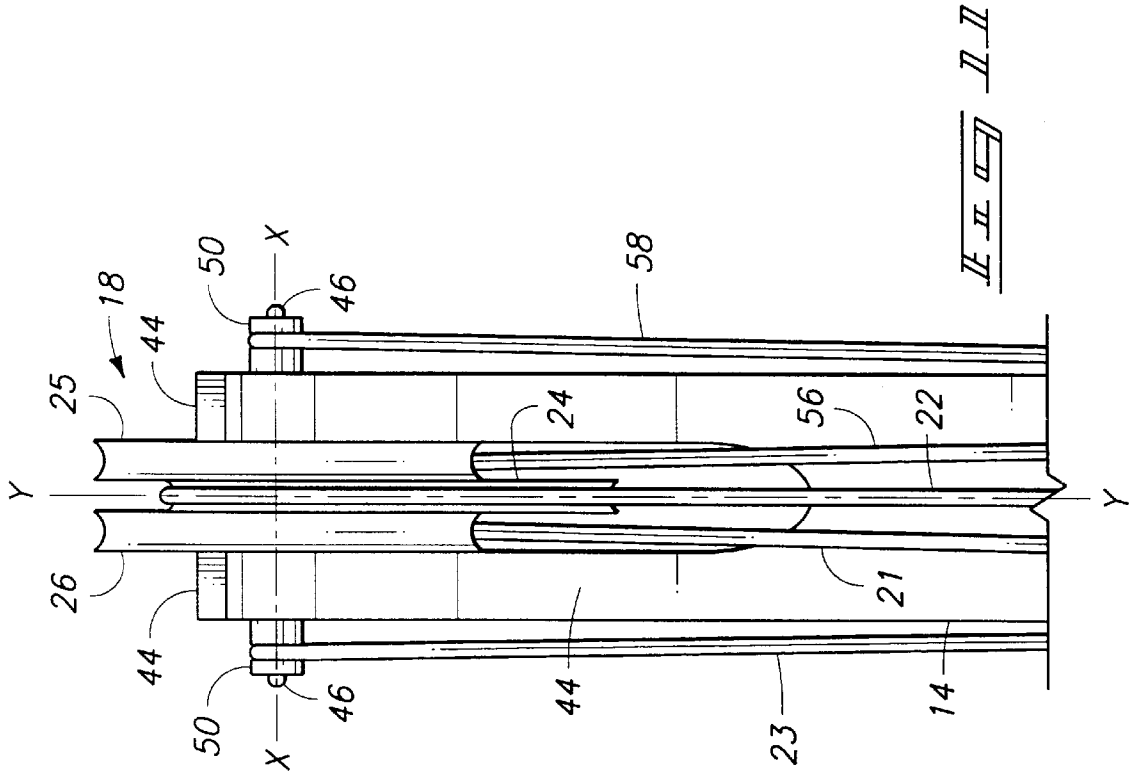
18
25
26
44
50
46
X
Y
58
24
56
22
21
23
14

FIG. 11

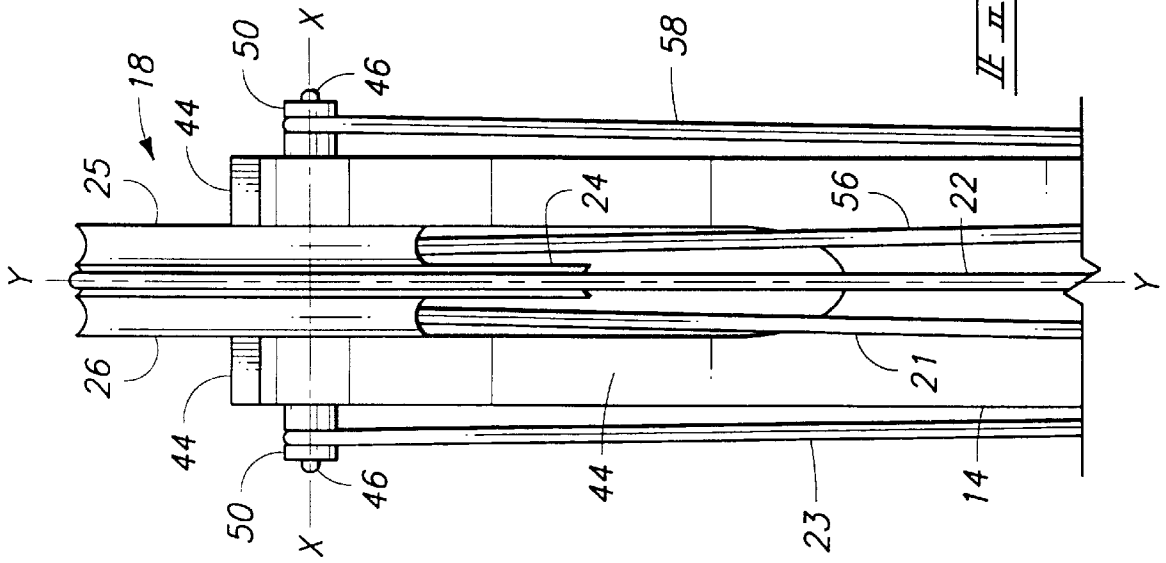
18
25
26
44
50
46
X
Y
58
24
56
22
21
23
14

FIG. 11

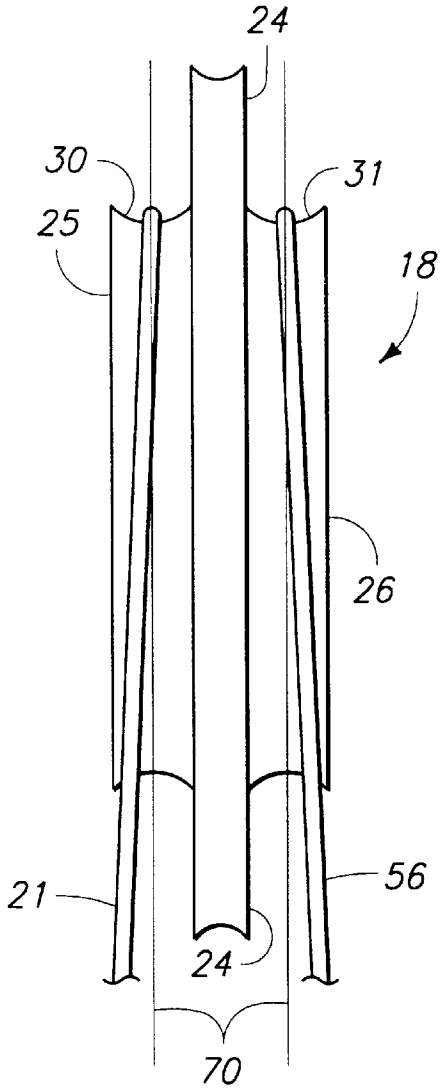

Fig 12

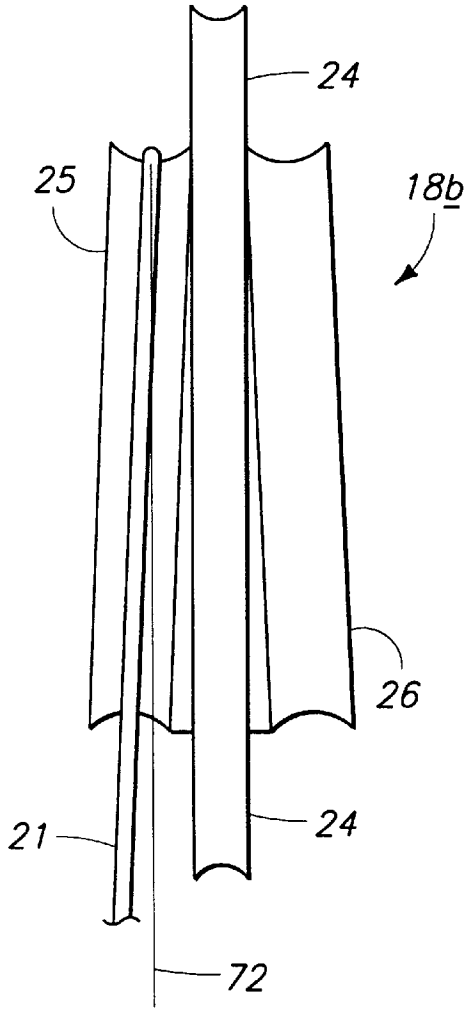

Fig 13

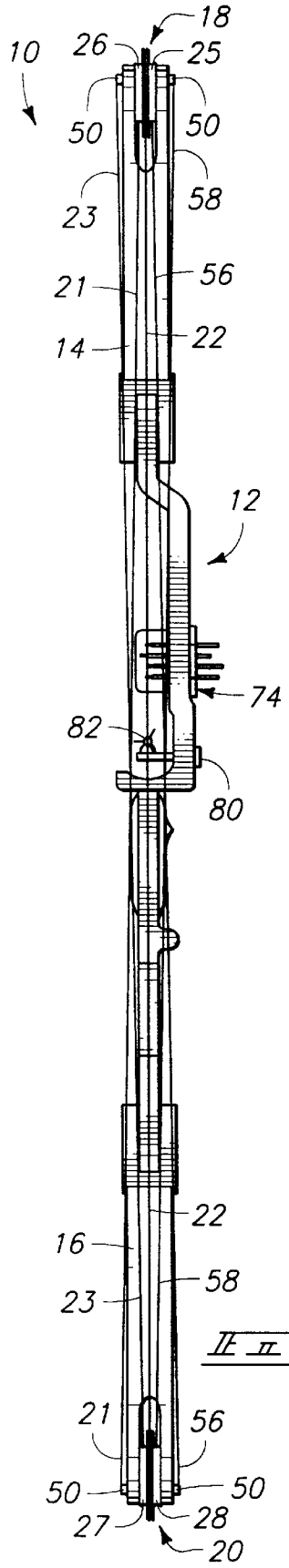
18
10
26
25
50
50
58
23
21
56
14
22
12
74
82
80
22
16
58
23
21
56
50
50
27
28
20

Fig 14

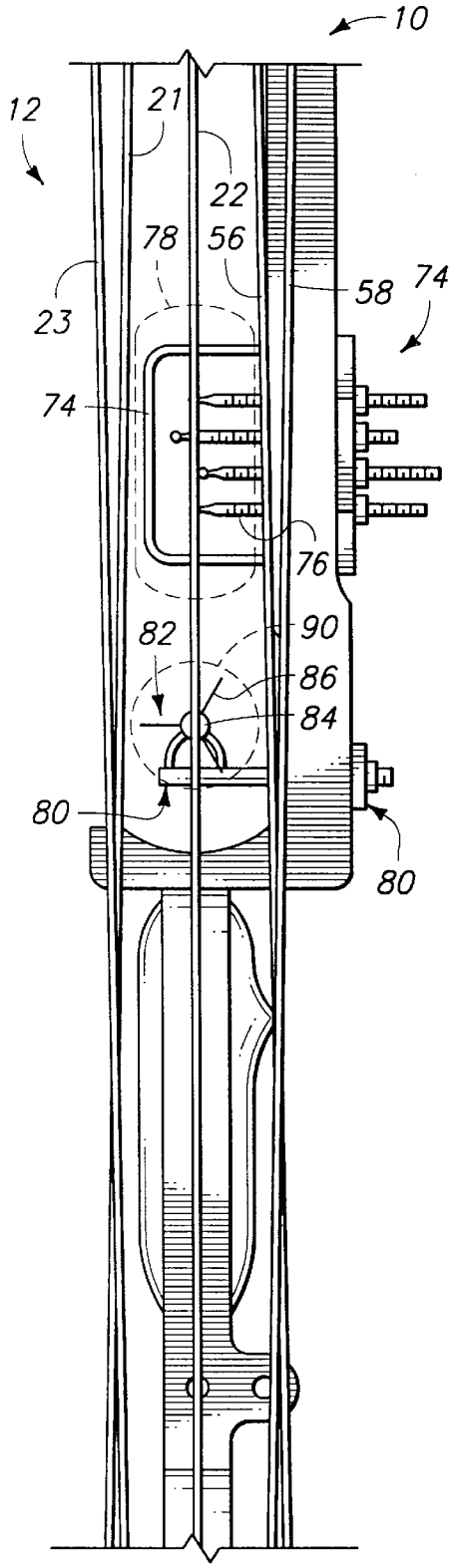
10
12
21
22
78
56
58
74
23
74
76
82
90
86
84
80
80

Fig 15

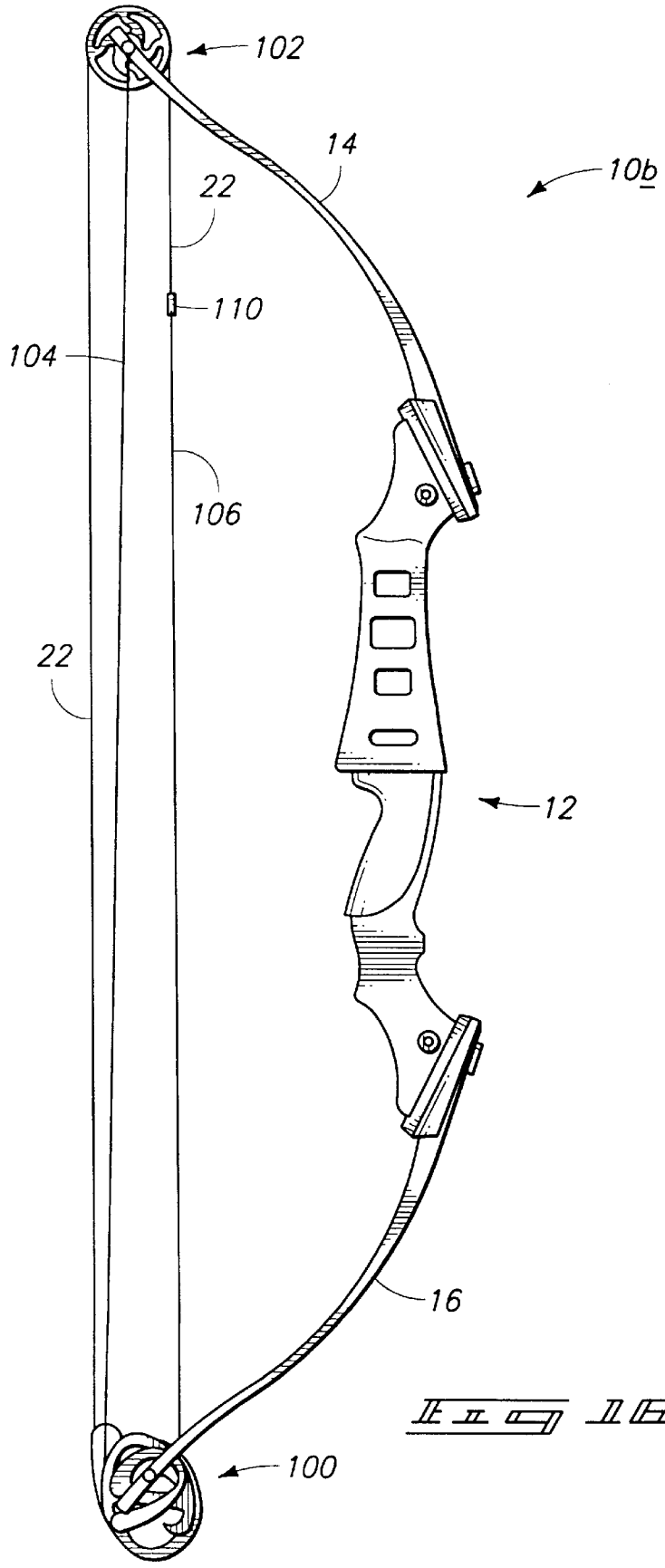

Fig 16

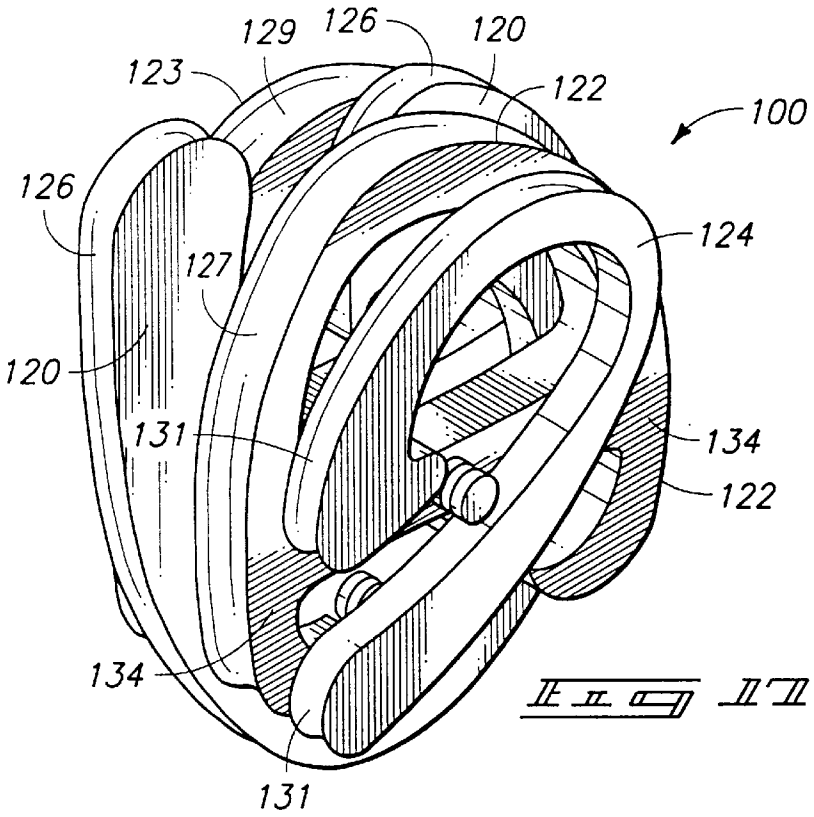
129
126
120
123
122
100
126
124
127
120
131
134
122
134
131

Fig 17

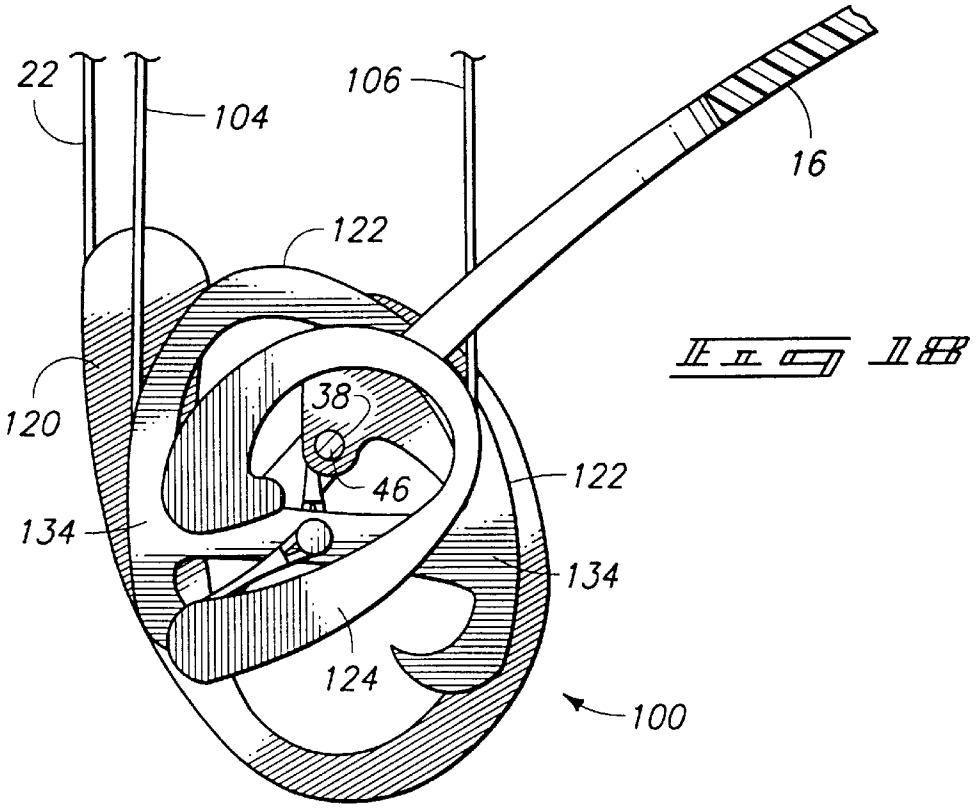
22
104
106
16
122
120
38
46
122
134
134
124
100

Fig 18

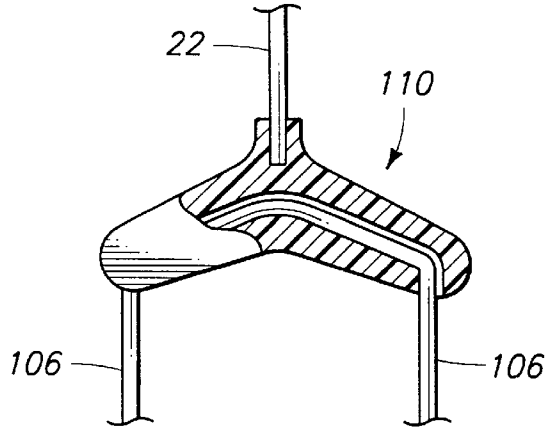

Fig 20

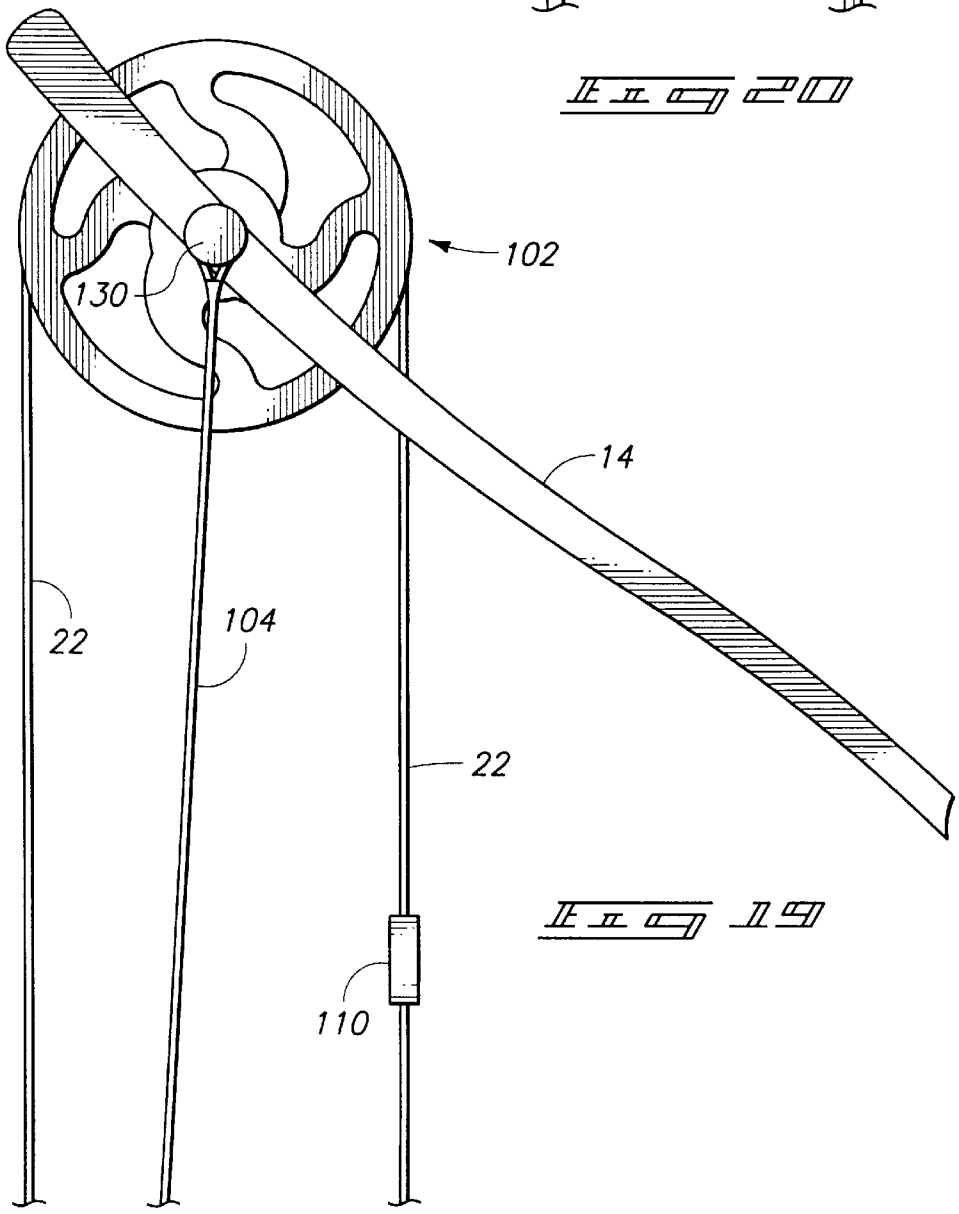

Fig 19

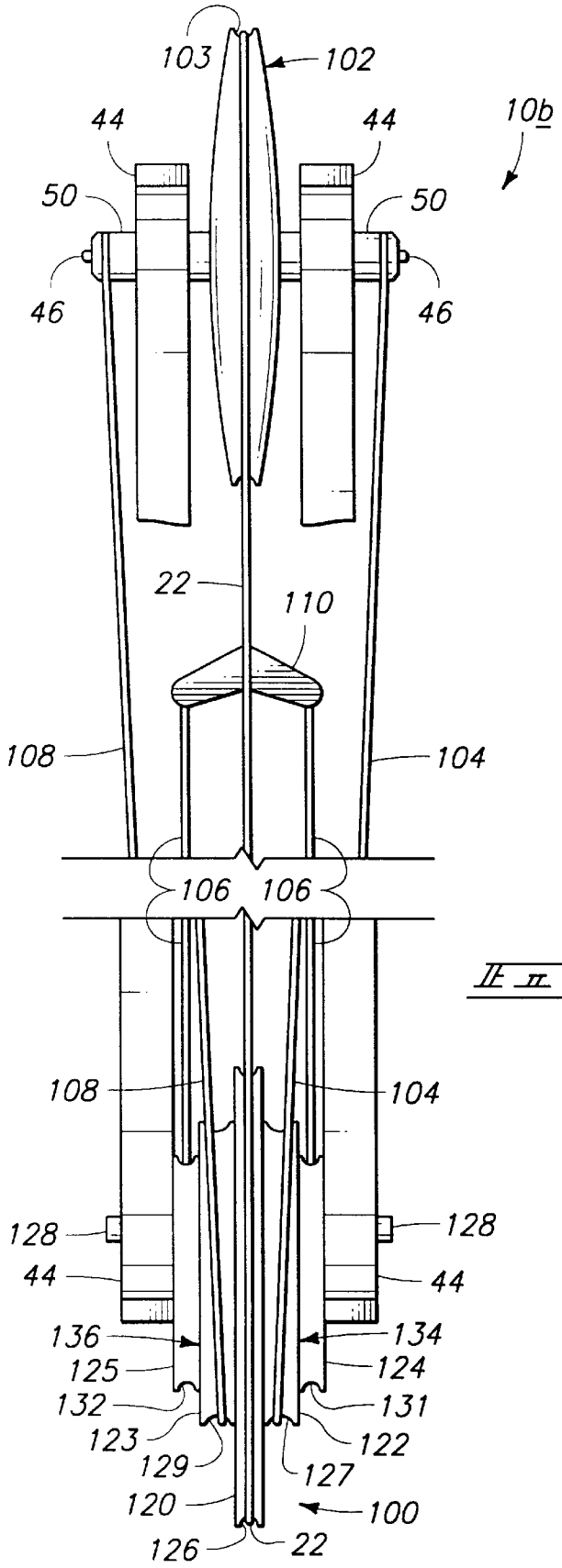
103
102
10b
44
44
50
50
46
46
22
110
108
104
106
106
108
104
128
128
44
44
136
134
125
124
132
131
123
122
129
127
120
100
126
22

Fig 21

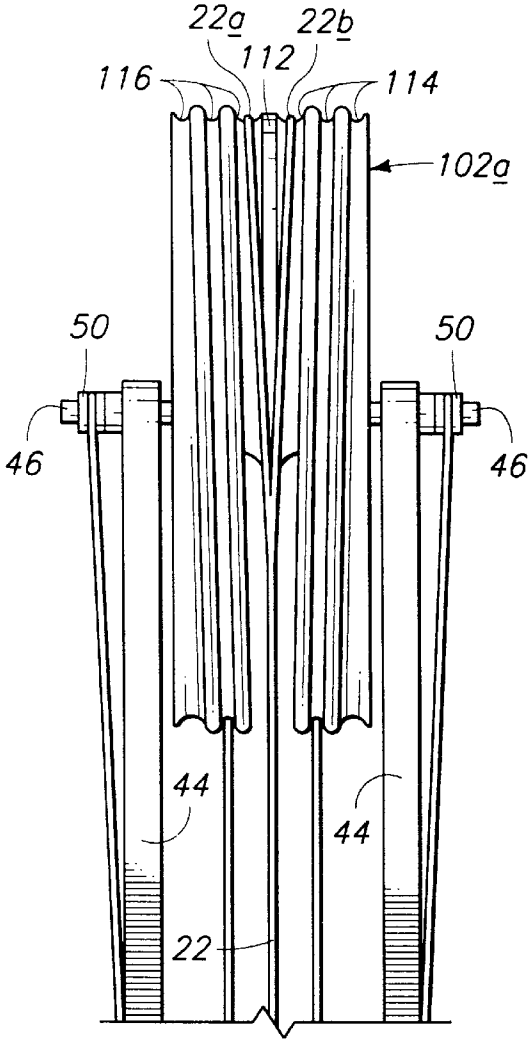
22a
22b
112
116
114
102a
50
50
46
46
44
44
22

Fig 22

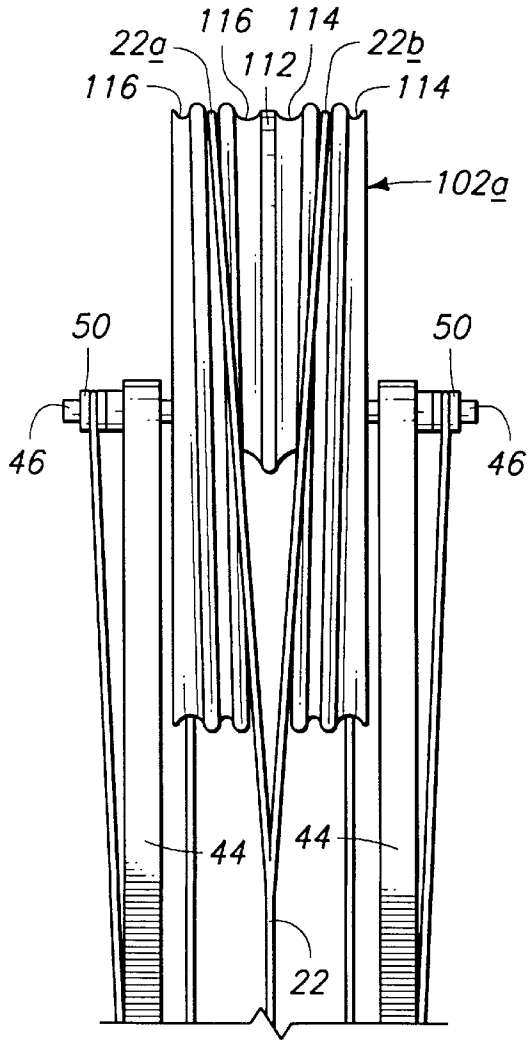
116
114
22a
22b
112
116
114
102a
50
50
46
46
44
44
22

Fig 23

ARCHERY BOWS, ARCHERY BOW CAM ASSEMBLIES, AND ARCHERY BOW ANCHORS

TECHNICAL FIELD

The invention pertains to archery bows, archery bow cam assemblies, and archery bow anchors.

BACKGROUND OF THE INVENTION

Various types of archery bows have been developed, including traditional bows (i.e., long bows and recurved bows) and compound bows. All archery bows include a pair of opposed limbs extending from a handle of the bow. As an archer draws the bow by pulling on a drawstring, the limbs flex and store energy. This energy is transferred to the arrow as the archer releases the drawstring.

A compound bow is a popular design for archery bows and comprises incorporating one or more cams (for example, eccentric wheels or pulleys) into the bow. These bows use a cable system which extends over at least one cam rotatably mounted at a distal end of a bow limb to provide a mechanical advantage during the drawback of the drawstring. Such cams enable a peak draw force (i.e., a peak pull force on a drawstring of a bow to maintain a draw) to be reached in the middle of a draw such that the draw force drops at full draw.

With this arrangement, when the drawstring is in the full draw position, maximum potential energy is stored in the bow while the force required to maintain the drawstring in the full draw position is less than the maximum draw force of the bow. In short, as the drawstring is being drawn, the draw force applied to the bow increases to a maximum force and reduces to a lower draw force at the full draw position. Accordingly, maximum energy is stored in the limbs without requiring maximum force to be applied to the drawstring to hold the bow at the full draw position. This permits the archer to maintain aim on his target prior to release for a longer period of time for a better shot.

A general goal of archery bow designs is to increase the speed in which an arrow is projected by a bow. Arrows which fly faster can maintain a flatter trajectory over a greater distance than slower traveling arrows. This can enable faster flying arrows to be fired more accurately than slower traveling arrows.

Methods to increase arrow speed include maximizing energy transferred to the arrow from the bow. Accordingly, one general goal of archery bow design is to alleviate twisting of bow limbs that occurs during a draw. The twisting of bow limbs uses energy that cannot be transferred to the arrow, and therefore, the energy is lost for increasing arrow speed.

Another goal of archery bow designs is to decrease frictional forces between moving components within a bow, such as, for example, bearings and axles. The more frictional forces associated with moving components, the more energy not available for increasing arrow speed.

A general goal of compound bow designs is to provide a cable system that allows for fletching and sighting clearances. A fletching clearance is the area of clearance needed for the cross-sectional area of a bow shaft and radially extending feathers to pass unimpeded. A sighting clearance is a region for aiming at a target unimpeded by the cable system. The conventional method for establishing fletching and sighting clearances is to provide cable guards. However, the cable guards create unbalanced forces in the limbs which twist the limbs detrimentally as discussed previously.

In light of the above discussed goals, it would be desirable to develop an archery bow to minimize the above-mentioned design inefficiencies and difficulties.

SUMMARY OF THE INVENTION

In one aspect, the invention includes an archery bow having a first limb and a second limb, and a handle between the limbs. A rotating member comprises at least two cams rotatably joined to the first limb with a first of the at least two cams having an eccentric profile to provide a first camming surface and a second of the at least two cams having an eccentric profile to provide a second camming surface. The eccentric profile of the first cam is substantially symmetrical relative to the eccentric profile of the second cam. A string extends between the rotating member and second limb.

In another aspect, the invention includes an archery bow having a pair of flexible resilient bow limbs forming first and second outer bow limb ends and forming first and second inner bow limb ends. A handle connects the first and second inner bow limb ends and a string extends between the first and second outer bow limb ends. At least four cables extend between the first and second outer bow limb ends.

In yet another aspect, the invention includes an archery bow cam assembly having a first cam with an eccentric profile to provide a first camming surface. A second cam has an eccentric profile to provide a second camming surface and the eccentric profile of the first cam is substantially symmetrical relative to the eccentric profile of the second cam. The archery bow cam assembly includes a primary cam between the first and second cams.

In still another aspect, the invention includes an archery bow anchor having an outward surface with a plurality of peripheral discrete grooves. Each groove is laterally displaced from an adjacent groove.

BRIEF DESCRIPTION OF THE DRAWINGS

Preferred embodiments of the invention are described below with reference to the following accompanying drawings.

FIG. **1** is a diagrammatic side view of a first embodiment archery bow of the present invention.

FIG. **2** is a perspective view of an archery bow cam in accordance with a first embodiment of the present invention.

FIG. **3** is a fragmentary view of the archery bow of FIG. **1** emphasizing a side view of the archery bow cam of FIG. **2** shown at a rest position relative a full draw.

FIG. **4** is an exploded view of the archery bow cam of FIG. **3**.

FIG. **5** is an enlarged fragmentary partial sectional view of an archery bow in accordance with a first embodiment of the present invention.

FIG. **6** is an enlarged fragmentary partial sectional view of an archery bow in accordance with a second embodiment of the present invention.

FIG. **7** is a side view of a cable anchor in accordance with a first embodiment of the present invention, and shown in cooperation with a archery bow limb (illustrated in phantom).

FIG. **8** is a perspective view of the cable anchor in FIG. **7**.

FIG. **9** is a perspective view of a cable anchor in accordance with another embodiment of the present invention.

FIG. **10** is a fragmentary view of an archery bow from the perspective of an archer using the bow and shown in a rest position relative a full draw.

FIG. **11** is a fragmentary view of the FIG. **10** archery bow shown in a full draw position.

FIG. **12** is a front view of the FIG. **2** archery bow cam.

FIG. **13** is a front view of an archery bow cam in accordance with another embodiment of the present invention.

FIG. **14** is a view of the FIG. **1** archery bow from the perspective of an archer using the present invention, this embodiment including additional components than shown in the FIG. **1** bow.

FIG. **15** is an enlarged fragmentary view of the FIG. **14** archery bow.

FIG. **16** is a diagrammatic side view of an archery bow in accordance with another embodiment of the present invention.

FIG. **17** is a perspective view of an archery bow cam in accordance with another embodiment of the present invention.

FIG. **18** is a fragmentary view of the archery bow of FIG. **16** emphasizing a side view of the archery bow cam of FIG. **17** shown at a rest position relative a full draw.

FIG. **19** is a fragmentary view of the FIG. **16** archery bow emphasizing an idler wheel in accordance with one embodiment of the present invention.

FIG. **20** is a partial sectional view of a yoke assembly in accordance with an embodiment of the present invention used with the FIG. **16** archery bow.

FIG. **21** is a fragmentary view of the FIG. **16** archery bow from the perspective of an archer using the bow.

FIG. **22** is a fragmentary view of an archery bow emphasizing an idler wheel in accordance with another embodiment of the present invention, and shown at a rest position relative a full draw.

FIG. **23** is a view of the FIG. **22** archery bow shown at a full draw position.

DETAILED DESCRIPTION OF THE PREFERRED EMBODIMENTS

This disclosure of the invention is submitted in furtherance of the constitutional purposes of the U.S. Patent Laws "to promote the progress of science and useful arts" (Article 1, Section 8).

FIG. **1** shows a first embodiment archery bow **10** of the present invention. Archery bow **10** comprises a handle **12**, and a pair of limbs **14** and **16** attached to handle **12**. Exemplary bow **10** further comprises a first rotating member **18** rotatably attached to limb **14** and a second rotating member **20** rotatably attached to limb **16**. A cable, for example a string or drawstring **22**, extends between first and second limbs **14** and **16**. In one embodiment, string **22** extends between first and second rotating members **18** and **20**. A plurality of cables **21** and **23**, for example power cables, extend between first and second limbs **14** and **16**. This exemplary bow embodiment illustrates the first rotating member **18** having the same configuration as the second rotating member **20**. Accordingly, any subsequent description regarding first rotating member **18** applies equally to rotating member **20**. It should be understood, however, that rotating member **20** could be different than member **18**, and could, for example, be an idler wheel. It should also be understood second limb **16** may not have a rotating member, and that cables could be directly attached to limb **16**.

A first embodiment of rotating member **18** is illustrated in FIG. **2** and comprises a plurality of cams, for example, a primary cam **24** between at least two cams. In the shown embodiment, primary cam **24** is between a first cam **25** and a second cam **26**. First cam **25** comprises an eccentric profile to provide a first camming surface **30** and second cam **26** comprises an eccentric profile to provide a second camming surface **31**. In this exemplary embodiment of rotating member **18**, the eccentric profile of first cam **25** is substantially symmetrical relative to the eccentric profile of second cam **26**. In this document, substantially symmetrical and substantially symmetrically aligned mean symmetry and alignment within tolerances of fabrication techniques. Additionally, the eccentric profiles are aligned wherein the eccentric profile of first cam **25** forms substantially a mirror image of the eccentric profile of second cam **26** relative primary cam **24**. In this document, mirror image means alignment within fabrication tolerances. Primary cam **24** comprises an eccentric profile to provide another camming surface **28**, and the eccentric profile of primary cam **24** is not substantially symmetrical relative the eccentric profiles of first and second cams **25** and **26**. Camming surfaces **28**, **30** and **31** form grooves to receive cables. Exemplary first and second cams **25** and **26** are parallel and equidistant relative primary cam **24**. An anchor **32**, for example a cable anchor, laterally extends from first rotating member **18** and comprises grooves **34** and **36** to receive, or anchor, cables. An opening **38** in rotating member **18** receives an axle (FIG. **3**). The substantially symmetrical design of rotating member **18** allows for the forces created in rotating member **18** by cables riding over the camming surfaces to be balanced, and therefore, alleviates unbalanced forces exist to be distributed unevenly within limb **14** causing twisting of limb **14**.

Referring to FIG. **3**, rotating member **18** is illustrated with string **22** at a rest position relative a full draw position, i.e., no pull force is applied to string **22**. Rotating member **18** receives an axle **46** in opening **38** to rotatably join rotating member **18** to first limb **14**. Cable **21** is received over first cam **25** and secured to cable anchor **32** in groove **34**. String **22** is received over primary cam **24** and secured to cable anchor **32** in groove **36**.

Referring to FIG. **4**, an exemplary embodiment of rotating member **18** includes primary cam **24** and second cam **26** formed as a one piece member **40**, and first cam **25** formed as a discrete member secured to the one piece member **40** by threaded members **42**. A stabilizer member **43** is received in aligned openings **45** and **47** of first cam **25** and one piece member **40**, respectively, for added support between first cam **25** and one piece member **40**. Limb **14** includes a distal end that comprises forked members **44** in which rotating member **18** is rotatable secured on axle **46**. Axle **46** is secured to forked members **44** by clips **48**, and exemplary clips comprise c-clips. In one embodiment, the axle **46** extends outwardly from each forked member **44** to receive an anchor, for example an axle anchor **50**, having a peripheral groove **51** to receive cables. Threaded member **52** secures cable anchor **32** to one piece member **40**. Various washers **54** may be used to relieve friction and distribute pressure between the anchors **50**, axle **46** and forked members **44**. It should be understood that rotating member **18** could be manufactured as one piece comprising primary cam **24** and first and second cams **25** and **26**. Furthermore, it should be understood that rotating member **18** could be manufactured as three discrete pieces comprising primary cam **24**, first cam **25** and second cam **26**, and subsequently assembled and secured together by, for example, threaded members.

Referring to FIG. **5**, a first embodiment of a rotating member **18** cooperating between forked members **44** is

illustrated wherein the entire width of rotating member **18** rotatably rests on axle **46** for rotatable support. It should be understood that opening **38** could have enlarged diametric dimensions partially along the width of rotating member **18**, for example, for the entire width of primary cam **24**, such that the entire width of rotating member **18** structure does not contact axle **46** thereby reducing friction between the components. It should be understood that rotating member **18** may only contact axle **46** in a central portion of primary cam **24**. Furthermore, it should be understood that rotating member **18** could make intermittent contact with axle **46** along its entire width for rotatable support. Lessening contact between axle **46** and rotating member **18** reduces friction to provide a more efficient archery bow **10**, allowing more energy to transfer from the bow **10** to an arrow.

A second embodiment of a rotating member **18** cooperating between fork members **44** is illustrated in FIG. **6**. Bearings **60** rotatably support rotating member **18** by supporting first and second cams **25** and **26** on axle **46** with primary cam **24** defining an opening **62** having a greater diameter than the diameter of axle **46**, and therefore, primary cam **24** does not contact axle **46**. It should be understood that a third bearing could occupy opening **62** to support primary cam **24** on axle **46**, either in combination with bearings **60**, or without bearings **60**. It should be understood one continuous bearing could support rotating member **18** along its entire width. Additionally, it should be understood that intermittently spaced plurality of discreet bearings could be spaced along the width of rotating member **18**.

In referring to subsequent figures, similar numbering to that utilized in describing the first embodiments of FIGS. **1–6** will be used, with differences indicated by the suffix "a","b", "c", or by different numerals. Referring to FIG. **7**, an embodiment of an anchor **50***a*, for example a cable anchor or axle anchor, is shown laterally extending from forked member **44** (shown in phantom) of a bow limb and supported on axle **46** by washer **54** and clip **48**. Anchor **50***a* comprises generally a cylindrical shape having a plurality of discrete circumferential grooves **64** and each groove **64** is laterally displaced from an adjacent groove **64**. Each groove **64** is capable of receiving a cable to provide lateral adjustment of a cable relative the bow **10** or string **22**. Accordingly, cable guards routinely used to spread cables from a drawstring are not needed. Exemplary plurality of grooves of the shown embodiment comprise three grooves **64** incrementally spaced laterally from adjacent grooves **64**.

Referring to FIG. **8**, one embodiment of an anchor **50***b* comprises one or more grooves **64** with a cylindrical opening **38***b* to receive axle **46** (FIG. **7**).

Referring to FIG. **9**, another embodiment of an anchor **50***c* comprises one or more grooves **64** with an opening **38***c*. Opening **38***c* is contoured to receive axle **46** for adjusting movement of anchor **50***c* on axle **46**. In one embodiment, opening **38***c* defines two intersecting oblong openings to allow anchor **50***c* to move generally perpendicularly relative a longitudinal axis of axle **46**. An anchor **50***c* capable of such movement relative the axle **46** allows for adjustment of tension in cables which are mounted to anchor **50***c*. It should be understood that anchor embodiments **50***a*, **50***b* and **50***c* could be positioned on axle **46** between forked members **44** and rotating member **18**. Additionally, it should be understood that the opening or openings within an anchor to receive an axle can be designed as any shape limited only by the imagination of the designer.

FIGS. **10** and **11** illustrate rotating member **18** in a rest position and a draw position, respectively. Referring to FIG. **10**, archery bow **10** is illustrated at a rest position, i.e., no pull force is applied to string **22**, and therefore, rotating member **18** is in a rest position without rotation on the axle **46**. An x-axis is oriented along axle **46** and an y-axis perpendicular to the x-axis is oriented along string **22** for illustration purposes.

Referring to FIG. **11**, archery bow **10** is illustrated at a full draw position, i.e., the string **22** has been pulled from bow **10** and is in a static position. The rotating member **18** has rotated on axle **46**. As illustrated, the x- and y-axes are oriented the same as in FIG. **10** demonstrating no twisting of forked members **44** or first limb **14**. Whether the rotating member **18** is in the rest position, or rotated somewhere between the rest position up to the full draw position, the x- and y-axes are oriented the same. Since the tensile forces in the cables are balanced on the rotating member **18** relative the centrally located primary cam **24**, no unbalanced forces exist to be transferred into forked member **44** and limb **14**. The limbs of a conventional bow have unbalanced forces in the limbs because the rotating members are not substantially symmetrically designed to evenly distribute the tensile forces in the cables. Accordingly, a plane established by the x- and y-axes (i.e., the plane of the page) would be rotated around an imaginary z-axis extending perpendicularly from the page. Additionally, for a conventional bow, the x-axis would be rotated around the y-axis. This twisting of the limbs depletes the energy that can be used to drive the arrow.

Referring to FIG. **12**, an exemplary rotating member **18** is shown. Axis **70** marks the centerline of grooves **30** and **31** for first and second cams **25** and **26**, respectively. In this embodiment, cables **21** and **56** ride in grooves **30** and **31**, respectively, angled from axis **70**.

Referring to FIG. **13**, another embodiment of rotating member **18**b is illustrated. First and second cams **25** and **26** are angled from primary cam **24** while still maintaining a mirror image relationship. Accordingly, cables **21** and **56** are aligned with axis **70** of grooves **30** and **31**. Centering the cables within the cams can increase the longevity of usefulness of the cables.

Referring to FIG. **14**, an embodiment of archery bow **10** is shown from the perspective an archer using bow **10**. Limb **14** rotatably supports rotating member **18** and limb **16** rotatably supports rotating member **20**. Bow **10** includes a sighting apparatus **74** and an arrow rest **80** to receive an arrow **82**. This perspective illustrates the configuration of string **22** and four cables **21**, **23**, **56**, and **58** on archery bow **10**. For sake of discussion, consider a plane defined by the string **22** extending out of the page and centrally through bow **10**. Accordingly, two sides of bow **10** are defined, a right side and a left side relative the plane. Each side of the plane includes two cables extending between the limbs **14** and **16**. For example, cables **21** and **23** extend between limbs **14** and **16** on the left side of the plane and cables **56** and **58** extend between limbs **14** and **16** on the right side of the plane. Each cable is a discrete cable and comprises two terminal ends. One terminal end is secured to an axle anchor of one limb and the other terminal end is secured to the rotating member on the other limb on the same side of bow **10**. For example, one end of cable **23** extends from axle anchor **50** of limb **14** on the left side of bow **10** to ride over cam **27** on the left side of rotating member **20** of limb **16** and anchors to rotating member **20**. One end of cable **21** is anchored to rotating member **18** of limb **14** on the left side of bow **10** and rides over cam **26** on the left side to extend to limb **16** and anchors to axle anchor **50** on the left side of bow **10**. This cable configuration of cables **21** and **23** is a mirror image of cable configuration of cables **56** and **58** on

the right side of the bow **10** relative the plane. Due to this symmetry between the cables on either side of string **22**, the tensile forces in the cables on the left side are balanced with the tensile forces in the cables on the right side.

Referring to FIG. **15**, an enlarged portion of bow **10** from FIG. **14** is shown, particularly emphasizing the area around handle **12**. The sighting apparatus **74** defines a region termed a sighting clearance **78** (shown in phantom) for an archer to aim arrow **82** at a target. Arrow **82** is supported on bow **10** by an arrow rest **80**. The arrow **82** comprises a plurality of vanes or feathers **86**, for example three, and a nock **84** that secures the arrow **82** to string **22**. The cross-sectional area of the arrow and radially extending feathers **86** define a region termed a fletching clearance **90** (shown in phantom). The sighting clearance **78** and fletching clearance **90** are unimpeded by cables **21**, **23**, **56** and **58** traversing the clearance regions **78** and **90**. Two reasons account for the clearances **78** and **90** being unimpeded. First, since the symmetry of the cable configuration has each cable extending between the limbs on the same side of the bow, no cable crosses into the clearance regions **78** and **90**. Secondly, the use of axle anchors described previously regarding FIGS. **7–9** allows for adjustment of the cables away from the clearance regions as needed.

Conventional bows routinely use less than four cables and a string. Increasing the number of cables secured between limbs of the archery bow allows for decreasing the diameter dimensions of at least one cable. For example, one or more of cables **21**, **23**, **56**, and **58** may include diameter dimensions greater than 0 inch and less than ⅛ inch, for example, from about 3/32 inch to less than ⅛ inch. An exemplary diametric range comprises from about 3/32 inch to less than ⅛ inch. The string may include diameter dimensions ranging from about 1/16 inch to less than 3/16 inch. Smaller dimensioned cables and string can increase the efficiency of a bow.

Referring to FIG. **16**, another embodiment of bow **10***b* is illustrated comprising another embodiment of a rotating member **100**. Rotating member **100** is rotatably joined to limb **16** and an idler wheel **102** is rotatably secured to limb **14**. A yoke **110** secures drawstring **22** to a cable assembly, for example to cable **106**, more thoroughly described and illustrated in FIG. **21**. It should be understood that rotating member **100** could be rotatably joined to limb **14**, and idler wheel **102** rotatable secured to limb **16**. Another embodiment includes no rotating member on limb **14** with string **22** extending between limb **14** and rotating member **100**.

Referring to FIG. **17**, rotating member **100** is illustrated and comprises a first cam **122** having an eccentric profile to provide a first camming surface **127**. First cam **122** has a first outwardly facing surface **134**. A second cam **123** has an eccentric profile to provide a second camming surface **129**. Second cam **123** has a second outwardly facing surface **136** (shown in FIG. **21**). A primary cam **120** is oriented between the first and second cams **122** and **123**. The eccentric profile of the first cam **122** is substantially symmetrically oriented as a mirror image of the eccentric profile of the second cam **123** relative primary cam **120**. A fourth cam **124** extends outwardly from the first outwardly facing surface **134** of the first cam **122** and the fourth cam **124** has an eccentric profile to provide a fourth camming surface **131**. A fifth cam **125** (shown in FIG. **21**) extends outwardly from the second outwardly facing surface **136** (shown in FIG. **21**) of second cam **123**. The fifth cam **125** has an eccentric profile to provide a fifth camming surface **132** (shown in FIG. **21**). The eccentric profile of the fourth cam **124** is substantially symmetrically oriented as a mirror image of the eccentric profile of the fifth cam **125** relative the primary cam **120**. First and second cams **122** and **123** are equidistant and parallel relative primary cam **120** and fourth and fifth cams **124** and **125** are equidistant and parallel relative primary cam **120**. Accordingly, the cam design on either side of primary cam **120** is substantially symmetrical to balance forces in rotating member **100** associated with the tensile forces from the cables and string. The symmetry minimizes the twisting of limbs. It should be understood that an embodiment of bow **10***b* could include a rotating member **100** rotatably joined to limb **14** and a rotating member **100** rotatably joined to limb **16**.

Referring to FIG. **19**, an embodiment of bow **10***b* comprises an idler wheel **102** rotatably joined to limb **14**. Idler wheel **102** includes a concentric profile defining a single centrally positioned groove **103** to receive string **22**.

Referring to FIG. **20**, an exemplary yoke **110** has string **22** terminating in yoke **110** and cable **106** slidingly held within yoke **110**. It should be understood that various arrangements of string **22** and cable **106** could be designed. For example, string **22** could slidingly cooperate around or through yoke **110**. Another example includes cable **106** with two ends terminating within yoke **110**. Another embodiment includes string **22** branching off into two strings **106** without the use of the yoke **110**. Yoke **110** comprises any material capable of handling the tensile stresses common in bow cables, for example, metal.

Referring to FIG. **21**, archery bow **10***b* is illustrated from the perspective of an archer using the bow **10***b*. Cable **106** is received by cams **124** and **125** and extends through yoke **110**. Cable **104** is received by cam **122** and terminates at anchor **50** of limb **14** (only forked member **44** is shown) on the right side of bow **10***b*. Cable **108** is received by cam **123** and terminates at anchor **50** of limb **14** (only forked member **44** is shown) on the left side of bow **10***b*. The cable configuration on one side of bow **10***b* is a mirror image of the cable configuration on the other side once again establishing symmetry.

Referring to FIGS. **22** and **23**, another embodiment of idler wheel **102***a* is illustrated. In FIG. **22**, idler wheel is shown in the rest position and comprises a central portion **112** and opposed helical grooves **114** and **116** substantially symmetrically oriented on either side of the central portion **112**. The grooves receive string **22** wherein the string **22** splits into two cables **22***a* and **22***b* before riding on idler wheel **102***a*. Strings **22***a* and **22***b* are received on opposite sides of the central portion **112** in grooves most adjacent the central portion **112**. Cable **22***a* rides in grooves **116** and cable **22***b* rides in grooves **114**.

Referring to FIG. **23**, idler wheel **102***a* is shown in a draw position. Idler wheel **102***a* rotates to move the two cables **22***a* and **22***b* in opposite directions by the opposed helical grooves **114** and **116**. While this embodiment does not use yoke **110**, the cables are still substantially symmetrically received over the idler wheel **102***a* to balance the tensile forces of the cables transferred into the bow.

Again referring to FIG. **22**, cables **22***a* and **22***b* are illustrated beginning at the front of idler wheel **102***a*, riding over idler wheel **102***a* in grooves **116** and **114**, respectively, and exiting the grooves **116** and **114** at the back of idler wheel **102***a* for a 180° wrap around idler wheel **102***a*. However, it should be understood that cables **22***a* and **22***b* could wrap an additional 360° (or any multiple thereof) around idler wheel **102***a* for a total of 540°. Furthermore, it should be understood that if cables **22***a* and **22***b* are to wrap around idler wheel **102***a* an additional number of times, for example, such as wrapping cables **22***a* and **22***b* around idler

wheel **102***a* twice for a total of additional 720°, cables **22***a* and **22***b* may need to be longer than illustrated to accommodate the increased wraps, and idler wheel **102***a* may need to include more grooves **114** and **116** to accommodate the longer cables **22***a* and **22***b*.

In compliance with the statute, the invention has been described in language more or less specific as to structural and methodical features. It is to be understood, however, that the invention is not limited to the specific features shown and described, since the means herein disclosed comprise preferred forms of putting the invention into effect. The invention is, therefore, claimed in any of its forms or modifications within the proper scope of the appended claims appropriately interpreted in accordance with the doctrine of equivalents.

What is claimed is:

1. An archery bow comprising:

a first limb and a second limb;

a handle between the limbs;

a rotating member comprising at least two cams rotatably joined to the first limb, a first of the two cams comprising an eccentric profile to provide a first camming surface and a second of the two cams comprising an eccentric profile to provide a second camming surface, the eccentric profile of the first cam is substantially symmetrical relative to the eccentric profile of the second cam; and

a string extending between the rotating member and second limb.

2. The archery bow of claim **1** wherein the eccentric profile of the first cam is parallel to the eccentric profile of the second cam.

3. The archery bow of claim **1** wherein the eccentric profile of the first cam is substantially symmetrically aligned to the eccentric profile of the second cam.

4. The archery bow of claim **1** wherein the eccentric profile of the first cam is substantially symmetrically aligned and angled relative to the eccentric profile of the second cam.

5. The archery bow of claim **1** wherein the rotating member further comprises a primary cam in rotational cooperation with the first and second cams.

6. The archery bow of claim **1** wherein the rotating member further comprises a primary cam between the first and second cams.

7. The archery bow of claim **1** wherein the rotating member further comprises a primary cam between the first and second cams, the primary cam comprising an eccentric profile not substantially symmetrical relative the eccentric profiles of the first and second cams.

8. The archery bow of claim **1** wherein the rotating member further comprises a primary cam between the first and second cams, the primary cam comprises an eccentric profile parallel to the eccentric profiles of the first and second cams.

9. The archery bow of claim **1** wherein the rotating member further comprises a primary cam between the first and second cams, and wherein the first and second cams are equidistant from the primary cam.

10. The archery bow of claim **1** wherein the rotating member further comprises a primary cam between the first and second cams, and wherein the eccentric profile of the first cam is substantially symmetrically aligned relative to the eccentric profile of the second cam.

11. The archery bow of claim **1** wherein the rotating member further comprises a primary cam between the first and second cams, the primary cam comprises an eccentric profile, the eccentric profiles of the first and second cams are angled relative the eccentric profile of the primary cam, and the eccentric profile of the first cam forms substantially a mirror image of the eccentric profile of the second cam relative to the eccentric profile of the primary cam.

12. The archery bow of claim **1** wherein the rotating member is further comprises a primary cam between the first and second cams, and wherein the first and second cams are integrally formed with the primary cam to form a single integral structure for the rotating member.

13. The archery bow of claim **1** wherein the rotating member further comprises a primary cam between the first and second cams, and the first and second cams are discrete structures removably attached to the primary cam.

14. The archery bow of claim **1** wherein the rotating member further comprises a primary cam between the first and second cams, and at least one of the first and second cams is a discrete structure removably attached to the primary cam.

15. The archery bow of claim **1** further comprising a member rotatably joined to the second limb.

16. The archery bow of claim **1** further comprising at least one generally cylindrical anchor removably attached to a limb and comprising a plurality of discrete circumferential grooves with each groove laterally spaced from the limb.

17. The archery bow of claim **1** further comprising a rotating component rotatably joined to the second limb, the string extending between the rotating member and rotating component.

18. The archery bow of claim **1** wherein the rotating member further comprises a primary cam between the first and second cams, the first cam comprises a first outwardly facing surface and the second cam comprises a second outwardly facing surface, a fourth cam extends outwardly from the first outwardly facing surface, a fifth cam extends outwardly from the second outwardly facing surface.

19. The archery bow of claim **18** wherein the fourth cam comprises an eccentric profile to provide a fourth camming surface and the fifth cam comprises an eccentric profile to provide a fifth camming surface, the eccentric profile of the fourth cam is substantially symmetrical relative to the eccentric profile of the fifth cam.

20. The archery bow of claim **18** wherein the fourth cam is aligned in substantially a mirror image relationship with the fifth cam.

21. An archery bow comprising:

a pair of flexible resilient bow limbs forming first and second outer bow limb ends and forming first and second inner bow limb ends;

a handle connecting the first and second inner bow limb ends;

a string extending between the first and second outer bow limb ends; and

at least four cables extending between the first and second outer bow limb ends.

22. The archery bow of claim **21** wherein the four cables are discrete cables relative to one another.

23. The archery bow of claim **21** further comprising at least one cable anchor laterally extending from an outer bow limb end, the cable anchor comprising generally a cylindrical surface having a plurality of discrete circumferential grooves, each groove laterally displaced from an adjacent groove.

24. The archery bow of claim **21** wherein each outer bow limb end comprises two laterally outwardly facing sides, and the archery bow further comprises at least one cable anchor

laterally extending outwardly from each laterally outwardly facing side, the cable anchors comprising a plurality of discrete grooves, each groove laterally displaced from an adjacent groove.

25. The archery bow of claim **24** wherein the four cables are discrete cables relative to one another, and each cable comprises two terminal ends, one terminal end secured to one cable anchor of one outer bow limb end and the other terminal end secured to the other outer bow limb end, the two terminal ends of each cable secured to the same side of the first and second outer bow limb ends.

26. The archery bow of claim **21** wherein the archery bow comprises opposed sides, two of the four cables extend between first and second outer bow limb ends on one side of the bow, and the other two cables extend between first and second outer bow limb ends on the other side of the bow.

27. An archery bow comprising:

a handle;

a first flexible bow limb and a second flexible bow limb, the first and second bow limbs being mounted on and projecting oppositely from the handle and terminating in first and second bow limb tips, respectively;

a string extending between the first and second bow limb tips; and

at least one cable anchor laterally extending from one flexible bow limb, the cable anchor comprising an outward surface having a plurality of peripheral discrete grooves, each groove laterally displaced from an adjacent groove.

28. The archery bow of claim **27** wherein each bow limb tip defines a slot having inside surfaces, the cable anchor laterally extending inwardly from the inside surfaces.

29. The archery bow of claim **27** wherein each bow limb tip comprises outwardly facing opposed surfaces, the cable anchor laterally extending outwardly from one outwardly facing surface.

30. The archery bow of claim **27** further comprises an axle secured within each bow limb tip and the cable anchor laterally extends from one bow limb tip removably secured on the axle.

31. The archery bow of claim **27** further comprises an axle secured within each bow limb tip and the cable anchor comprises an opening contoured to securely receive the axle.

32. The archery bow of claim **27** further comprises an axle secured within each bow limb tip and the cable anchor comprises an opening contoured to receive the axle and allow adjusting movement of the axle within the cable anchor.

33. The archery bow of claim **27** further comprises an axle secured within each bow limb tip and each bow limb tip comprises two sides with each side facing laterally outwardly opposite the other side, a cable anchor laterally extends outward from each side of each bow limb tip removably secured on the axle.

34. An archery bow comprising:

a first limb and a second limb;

a handle between the limbs; and

at least one cable extending between the first and second limbs, the cable having a diameter dimension greater than 0 inches and ranging from about 3/32 inch to less than 1/8 inch.

35. The archery bow of claim **34** wherein the at least one cable comprises a diameter dimension ranging from about 3/32 inch to less than 1/8 inch.

36. The archery bow of claim **34** further comprising a string having diameter dimensions ranging from about 1/16 inch to less than 3/16 inch.

37. The archery bow of claim **34** wherein each limb comprises two laterally outwardly facing sides, and the archery bow further comprises at least one cable anchor laterally extending outwardly from each laterally outwardly facing side, the cable anchors comprising generally a cylindrical shape having a plurality of discrete circumferential grooves, each groove laterally displaced from an adjacent groove and capable of receiving the cable, the cable capable of being positioned laterally outward from the archery bow by positioning the cable in a more outward groove relative the archery bow.

38. The archery bow of claim **34** further comprising a plurality of cables with at least two of the cables having diameter dimensions ranging from about 3/32 inch to less than 1/8 inch.

39. The archery bow of claim **34** further comprising four cables and a string, the string having diameter dimensions ranging from about 1/16 inch to less than 3/16 inch.

40. The archery bow of claim **34** further comprising four cables and a string, the cables having diameter dimensions ranging from about 3/32 inch to less than 3/8 inch and the string having diameter dimensions ranging from about 1/16 inch to less than 3/16 inch.

41. An archery bow comprising:

a handle having opposing ends;

a first flexible limb and a second flexible limb, each limb extending outwardly from the handle opposing ends, and each limb having a distal end;

an axle secured within the distal end of the first flexible limb;

a rotating member secured on the axle;

a string extending between the rotating member and a region proximate the distal end of the second flexible limb;

at least two discrete bearings rotatably mounted on the axle to rotatably support the rotating member; and

wherein the rotating member comprises a primary cam between two secondary cams.

42. The archery bow of claim **41** further comprising one discrete bearing contacting one secondary cam and the other discrete bearing contacting the other secondary cam.

43. The archery bow of claim **41** further comprising a plurality of discrete bearings spaced from each other for evenly distributing and balancing the support weight of the rotating member on each bearing.

44. The archery bow of claim **41** further comprising at least one cable and at least one cable anchor laterally extending from one limb, the cable anchor comprising generally a cylindrical shape having a plurality of discrete circumferential grooves, each groove laterally displaced from an adjacent groove and capable of receiving the cable.

45. The archery bow of claim **41** wherein the primary cam has two outward sides, the primary cam between a plurality of secondary cams, a plurality of secondary cams on each side of the primary cam, one discrete bearing supporting the rotating member on one side of the primary cam and the other discrete bearing supporting the rotating member on the other side of the primary cam, the discrete bearings equidistant from the primary cam.

46. The archery bow of claim **41** wherein the primary cam has two outward sides, the primary cam between a plurality of secondary cams, a plurality of secondary cams on each side of the primary cam, a plurality of discrete bearings spaced from each other for evenly distributing and balancing the support weight of the rotating member on each bearing.

47. An archery bow comprising:

a first limb and a second limb;

a handle between the limbs;

a first rotating member comprising at least two cams rotatably joined to the first limb, a first of the at least two cams comprising an eccentric profile to provide a first camming surface and a second of the at least two cams comprising an eccentric profile to provide a second camming surface, the eccentric profile of the first cam is substantially symmetrical relative to the eccentric profile of the second cam;

a second rotating member comprising at least two cams rotatably joined to the second limb, a third of the at least two cams comprising an eccentric profile to provide a third camming surface and a fourth of the at least two cams comprising an eccentric profile to provide a fourth camming surface, the eccentric profile of the third cam is substantially symmetrical relative to the eccentric profile of the fourth cam; and

a string extending between the first and second rotating members.

48. The archery bow of claim 47 wherein the first rotating member comprises a primary cam between the first and second cams and the second rotating member comprises a primary cam between the third and fourth cams.

49. The archery bow of claim 47 wherein the first rotating member comprises a first primary cam between the first and second cams and the second rotating member comprises a second primary cam between the third and fourth cams, the first and second cams are parallel and equidistant relative the first primary cam and the third and fourth cams are parallel and equidistant relative the second primary cam.

50. The archery bow of claim 49 wherein the string has two ends and extends between the first and second primary cams with one end secured to the first rotating member and the other end secured to the second rotating member, the string and primary cams establish a centrally vertical plane through the archery bow to define a right side of the bow and a left side of the bow opposite the right side relative the plane.

51. The archery bow of claim 50 further comprising four cables, two cables positioned between the limbs on the right side of the plane and two cables positioned between the limbs on the left side of the plane, the two cables on one side are secured to the bow in the same fashion as the two cables on the other side.

52. The archery bow of claim 51 wherein each cable comprises two ends, the two cables on the right side comprise one cable having one end secured to the first limb and the other end secured over the fourth cam to the second rotating member of the second limb and the other cable on the right side having one end secured to the second limb and the other end secured over the second cam to the first rotating member of the first limb, and the two cables on the left side of the plane configured the same as the right side cables.

53. The archery bow of claim 52 wherein the ends of the cables secured to the limbs are secured to the limbs by cable anchors, the cable anchors having a plurality of discrete peripheral grooves to receive the cable ends, the grooves generally parallel to the plane established by the string and primary cams and each groove laterally spaced from the adjacent groove.

54. An archery bow comprising:

a central handle having opposing ends;

a first flexible power limb extending outwardly from one handle end and a second flexible power limb extending outwardly from the other handle end, each of the limbs having an inner end connected with the handle and an outer free end;

a rotating member rotatably joined to the outer free end of the first flexible power limb, the rotating member comprising:

a first cam comprising an eccentric profile to provide a first camming surface, the first cam having a first outwardly facing surface;

a second cam comprising an eccentric profile to provide a second camming surface, the second cam having a second outwardly facing surface;

a primary cam between the first and second cams, and wherein the eccentric profile of the first cam is substantially symmetrically oriented as a mirror image of the eccentric profile of the second cam relative the primary cam;

a fourth cam extending outwardly from the first outwardly facing surface of the first cam, the fourth cam comprising an eccentric profile to provide a fourth camming surface; and

a fifth cam extending outwardly from the second outwardly facing surface of the second cam, the fifth cam comprising an eccentric profile to provide a fifth camming surface, and wherein the eccentric profile of the fourth cam is substantially symmetrically oriented as a mirror image of the eccentric profile of the fifth cam relative the primary cam; and

a string extending between the rotating member and the outer free end of the second flexible power limb.

55. The archery bow of claim 54 wherein the outer free end of the second flexible power limb rotatably supports an idler wheel comprising opposed helical grooves to receive the string.

56. The archery bow of claim 54 wherein the outer free end of the second flexible power limb rotatably supports an idler wheel comprising a central portion with opposed helical grooves substantially symmetrically oriented on either side of the central portion, the grooves receive the string.

57. The archery bow of claim 54 wherein the outer free end of the second flexible power limb rotatably supports an idler wheel comprising a central portion with opposed helical grooves substantially symmetrically oriented on either side of the central portion, the grooves receive the string, and wherein the string splits into two cables before received in the grooves.

58. The archery bow of claim 54 wherein the outer free end of the second flexible power limb rotatably supports an idler wheel comprising a central portion with opposed helical grooves substantially symmetrically oriented on either side of the central portion, the grooves receive the string, and wherein the string splits into two cables before received in the grooves, the two cables are received in the grooves most adjacent the central portion wherein rotation of the idler wheel moves the two cables in the opposed helical grooves to space apart the two cables.

59. An archery bow anchor comprising:

an outward surface having a plurality of peripheral discrete grooves, each groove laterally displaced from an adjacent groove; and

an opening extending axially through the anchor and dimensioned to receive a bow axle.

60. The archery bow anchor of claim 59 wherein the opening is dimensioned to allow adjusting movement of the axle.

61. The archery bow anchor of claim **59** wherein the outward surface defines generally a cylindrical shape.

62. An archery bow cam assembly comprising:

a first cam comprising an eccentric profile to provide a first camming surface;

a second cam comprising an eccentric profile to provide a second camming surface, the eccentric profile of the first cam is substantially symmetrical relative to the eccentric profile of the second cam; and

a primary cam between the first and second cams.

63. The archery bow cam assembly of claim **62** wherein the eccentric profile of the first cam is substantially symmetrically aligned to the eccentric profile of the second cam.

64. The archery bow cam assembly of claim **62** wherein the eccentric profile of the first cam forms substantially a mirror image of the eccentric profile of the second cam relative the primary cam, and the first and second cams are angled relative the primary cam.

65. The archery bow cam assembly of claim **62** wherein the primary cam comprises an eccentric profile not substantially symmetrical relative the eccentric profiles of the first and second cams.

66. The archery bow cam assembly of claim **62** wherein at least one of the first and second cams is a discrete structure removably attached to the primary cam.

67. The archery bow cam assembly of claim **62** wherein the first cam comprises a first outwardly facing surface and the second cam comprises a second outwardly facing surface, a fourth cam extends outwardly from the first outwardly facing surface of the first cam, a fifth cam extends outwardly from the second outwardly facing surface of the second cam.

68. The archery bow cam assembly of claim **67** wherein the fourth cam comprises an eccentric profile to provide a fourth camming surface and the fifth cam comprises an eccentric profile to provide a fifth camming surface, the eccentric profile of the fourth cam is substantially symmetrical relative to the eccentric profile of the fifth cam.

69. The archery bow cam assembly of claim **67** wherein the fourth cam is aligned in substantially a mirror image relationship with the fifth cam.

* * * * *