US 20080024768A1

(19) United States

(12) Patent Application Publication

(10) Pub. No.: US 2008/0024768 A1

(43) Pub. Date: Jan. 31, 2008

Babayoff

(54) METHOD AND APPARATUS FOR COLOUR IMAGING A THREE-DIMENSIONAL STRUCTURE

(75) Inventor: **Noam Babayoff**, Rishon Ie Zion (IL)

Correspondence Address:
Gary M. Nath
THE NATH LAW GROUP
112 S. West Street
Alexandria, VA 22314 (US)

(73) Assignee: **Cadent Ltd**

(21) Appl. No.: **11/889,112**

(22) Filed: **Aug. 9, 2007**

Related U.S. Application Data

(63) Continuation of application No. 11/154,520, filed on Jun. 17, 2005.

(60) Provisional application No. 60/580,109, filed on Jun. 17, 2004. Provisional application No. 60/580,108, filed on Jun. 17, 2004.

Publication Classification

(51) **Int. Cl.**
G01N 21/00 (2006.01)

(52) **U.S. Cl.** **356/73**

(57) **ABSTRACT**

A device for determining the surface topology and associated color of a structure, such as a teeth segment, includes a scanner for providing depth data for points along a two-dimensional array substantially orthogonal to the depth direction, and an image acquisition means for providing color data for each of the points of the array, while the spatial disposition of the device with respect to the structure is maintained substantially unchanged. A processor combines the color data and depth data for each point in the array, thereby providing a three-dimensional color virtual model of the surface of the structure. A corresponding method for determining the surface topology and associated color of a structure is also provided.

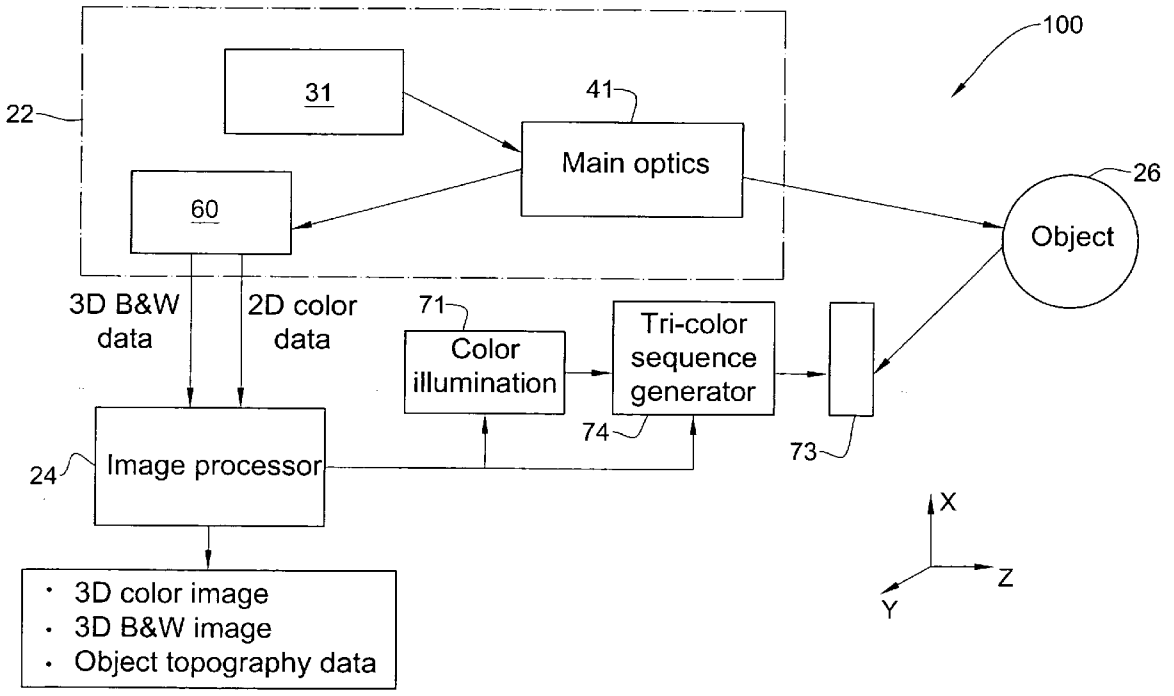

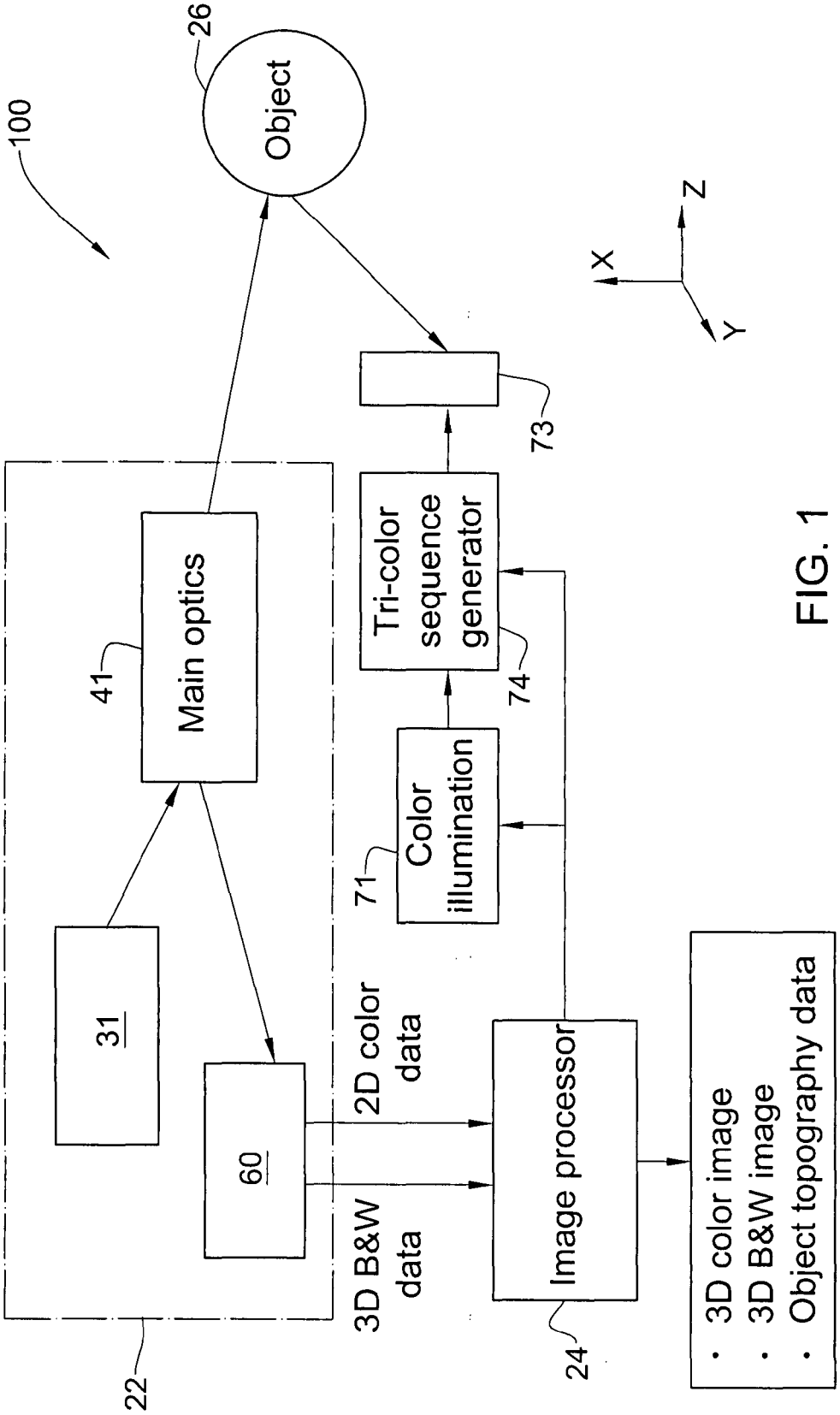
100
26
Object
Z
X
Y
73
Tri-color sequence generator
74
Main optics
41
Color illumination
71
31
60
2D color data
3D B&W data
Image processor
24
22
• 3D color image
• 3D B&W image
• Object topography data

FIG. 1

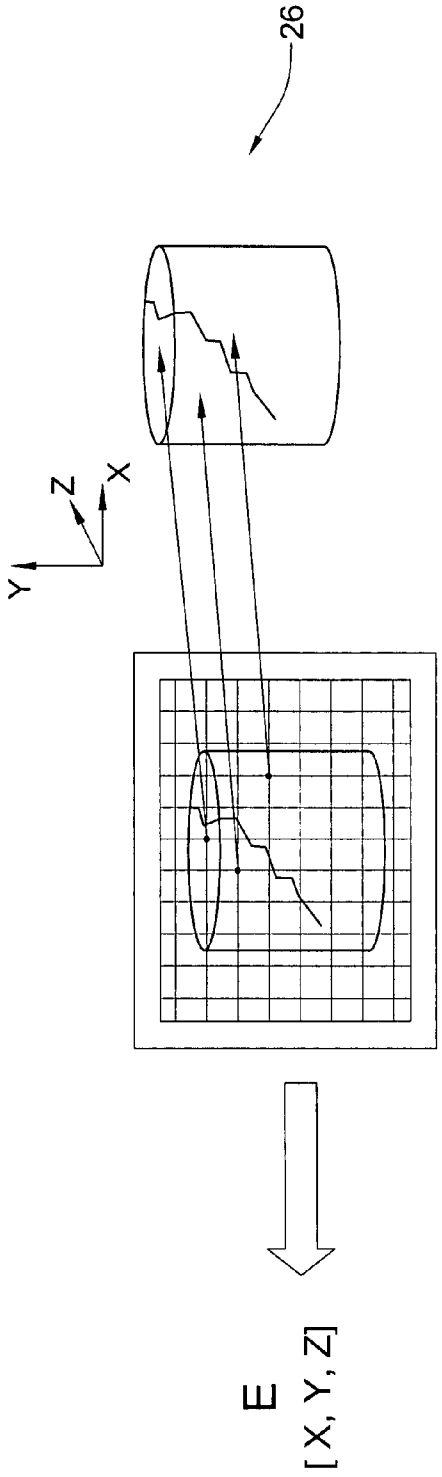

FIG. 2A

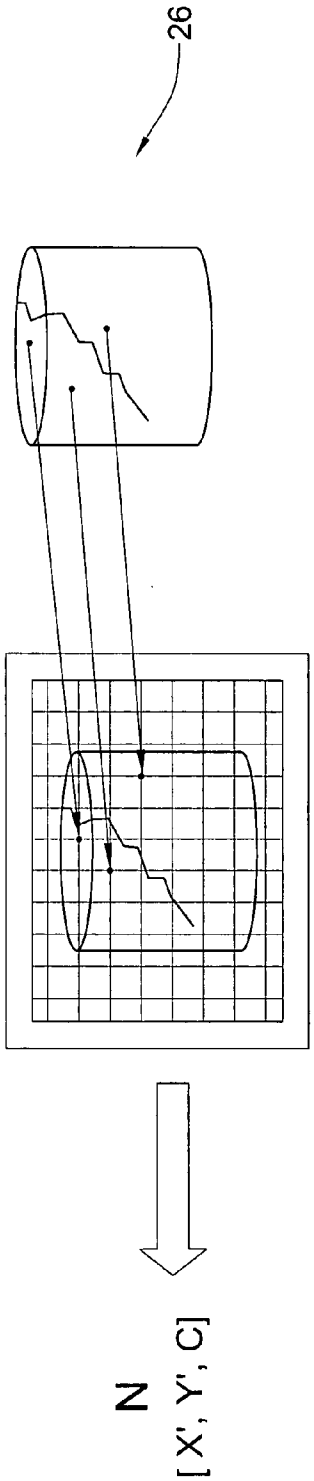

FIG. 2B

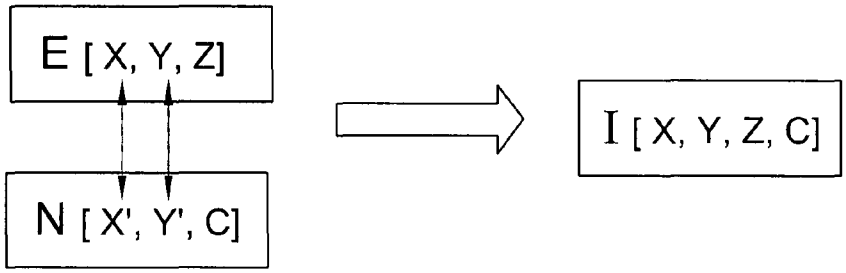

FIG. 2C

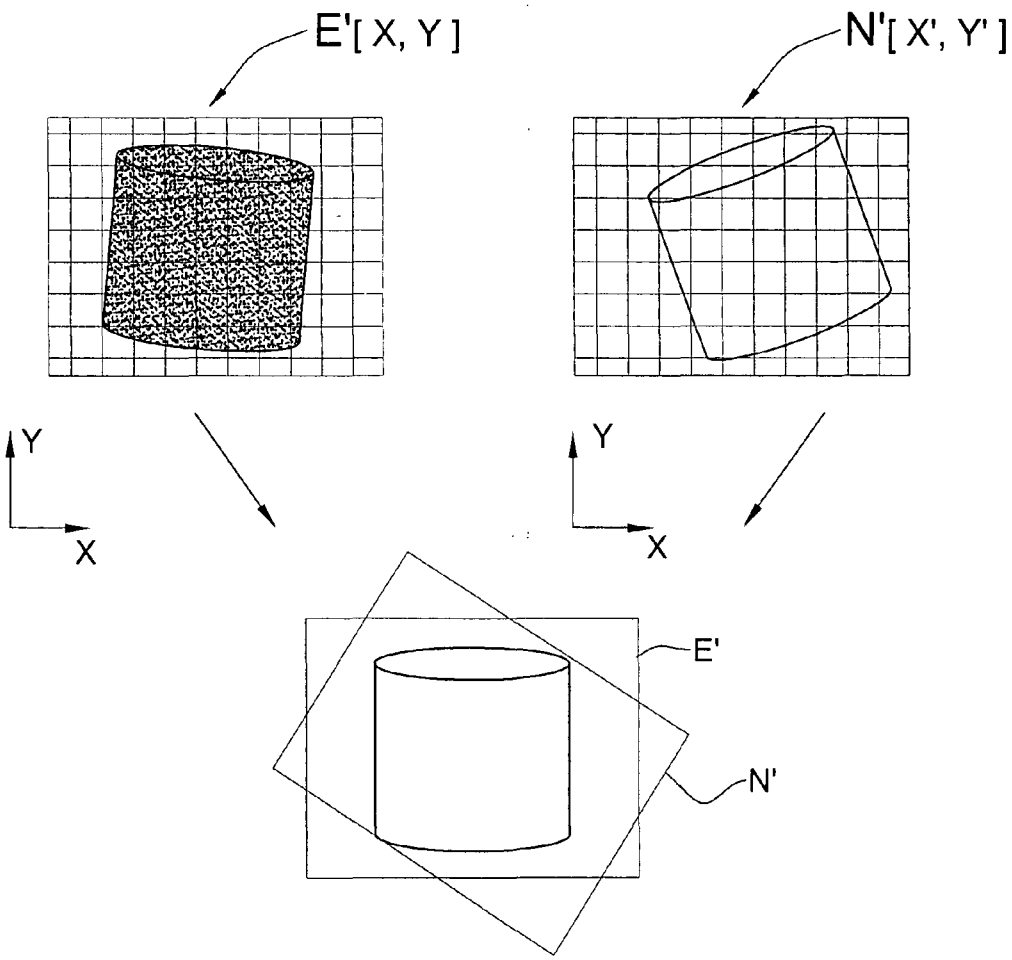

FIG. 3

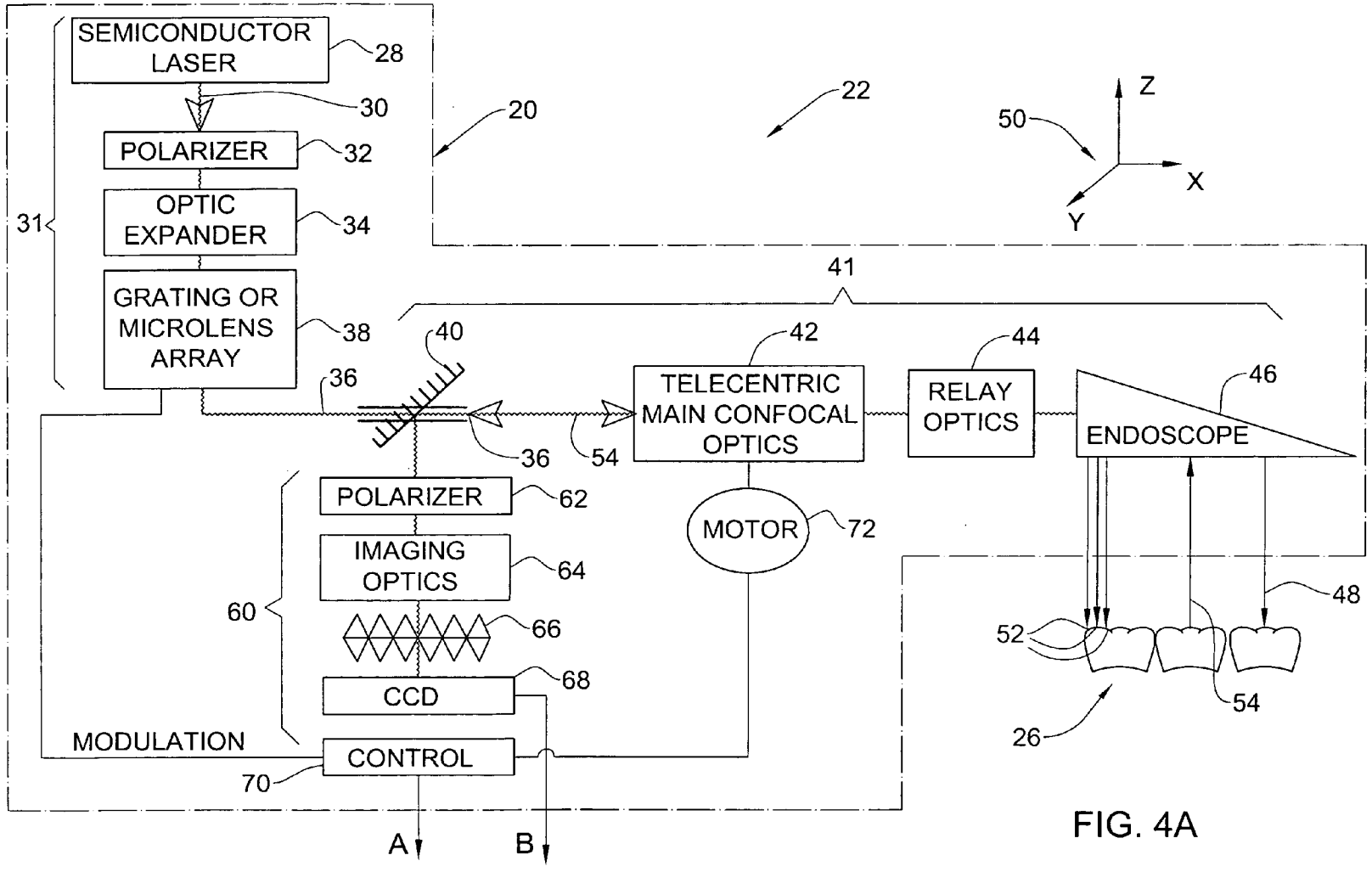
SEMICONDUCTOR LASER
28
30
POLARIZER
32
OPTIC EXPANDER
34
GRATING OR MICROLENS ARRAY
38
31
20
22
50
Z
X
Y
41
40
42
44
46
36
36
54
TELECENTRIC MAIN CONFOCAL OPTICS
RELAY OPTICS
ENDOSCOPE
POLARIZER
62
IMAGING OPTICS
64
60
66
CCD
68
MODULATION
CONTROL
70
MOTOR
72
48
52
54
26
A
B

FIG. 4A

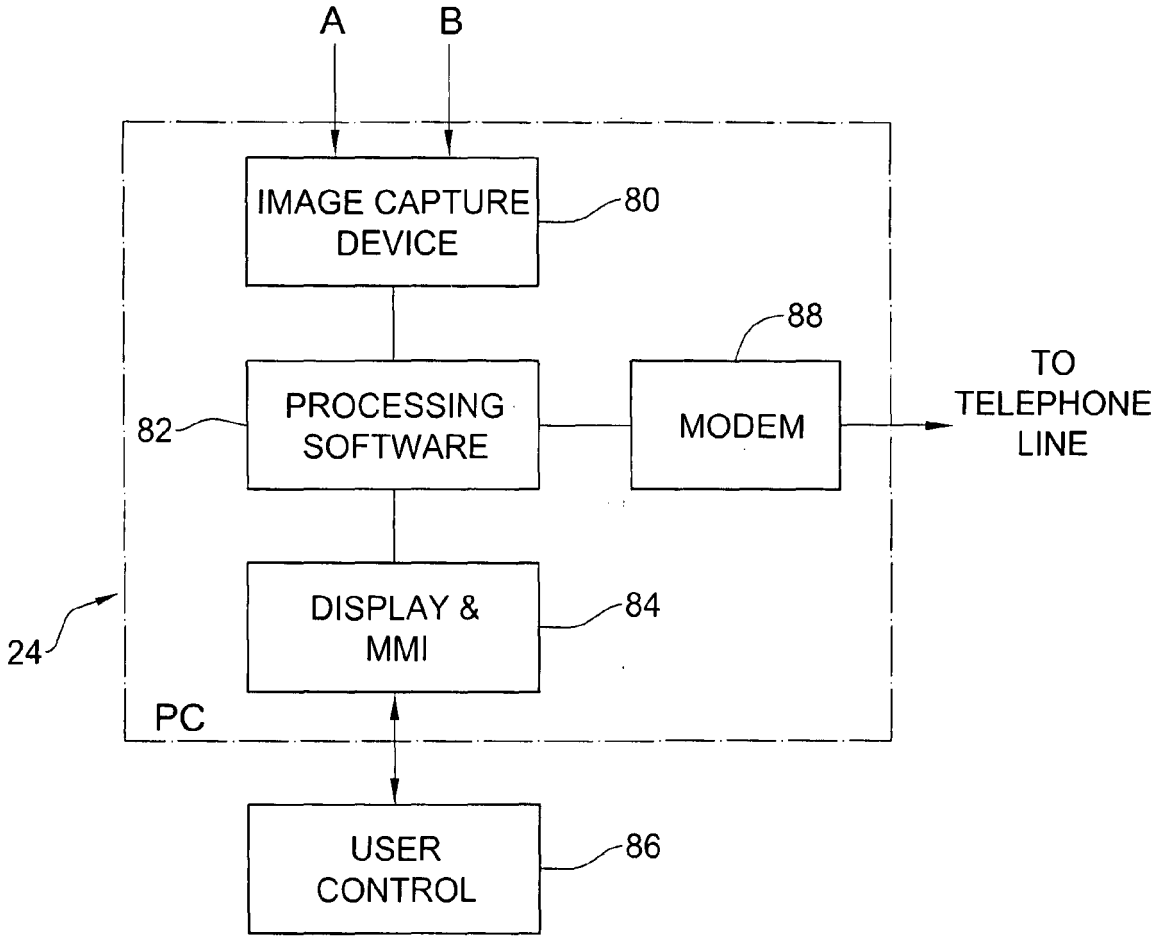
A
B
IMAGE CAPTURE DEVICE
80
88
PROCESSING SOFTWARE
82
MODEM
TO TELEPHONE LINE
DISPLAY & MMI
84
24
PC
USER CONTROL
86

FIG. 4B

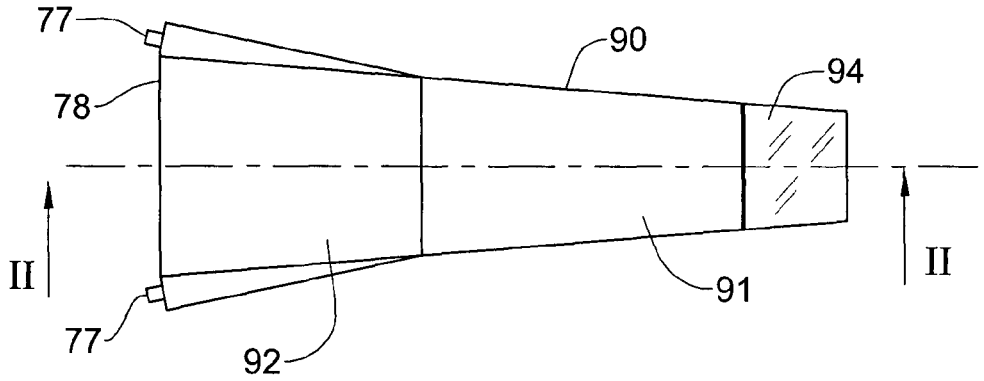

FIG. 5A

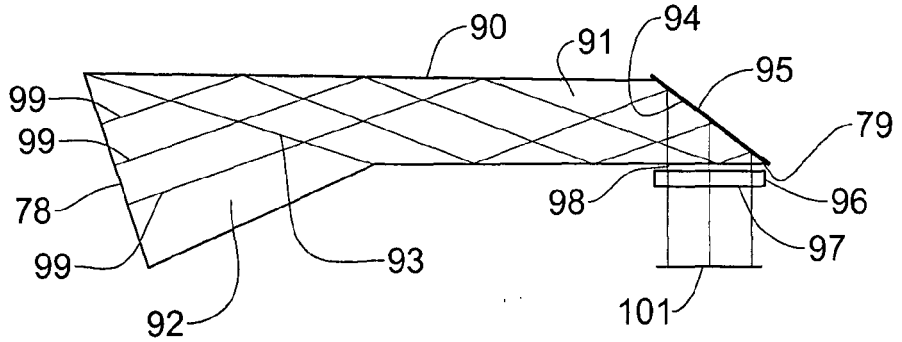

FIG. 5B

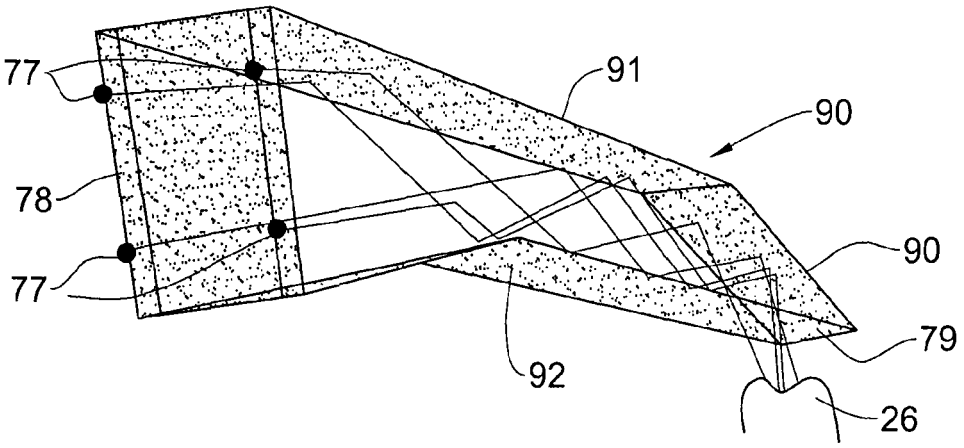

FIG. 5C

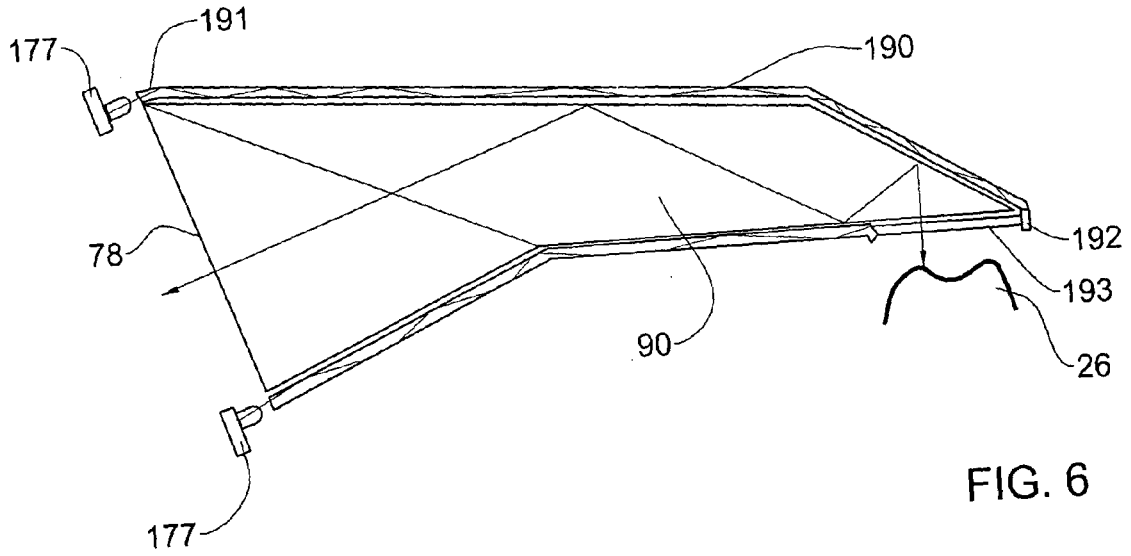

FIG. 6

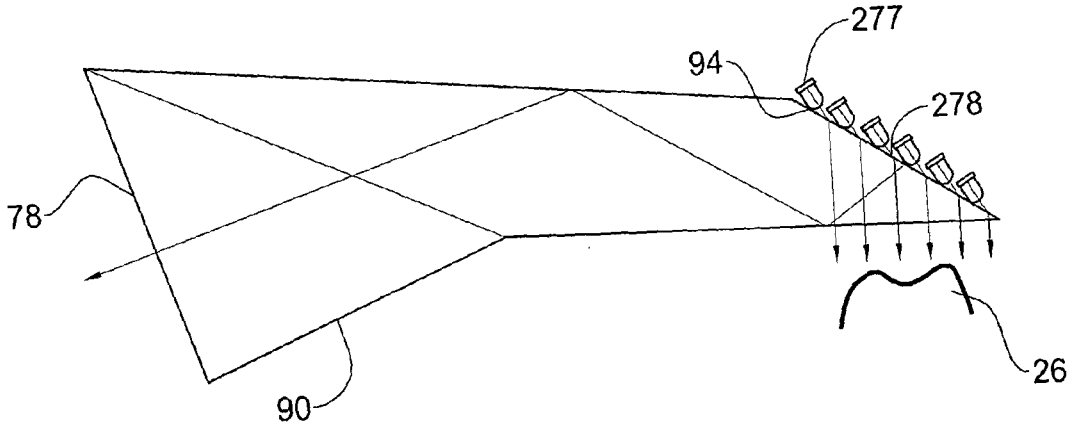

FIG. 7A

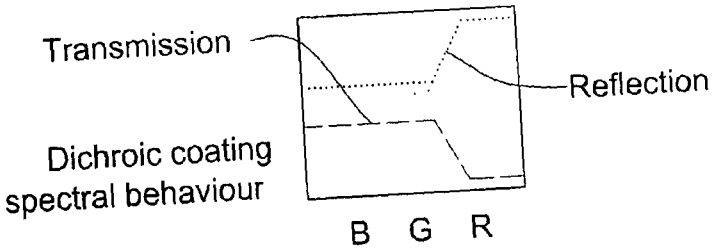

FIG. 7B

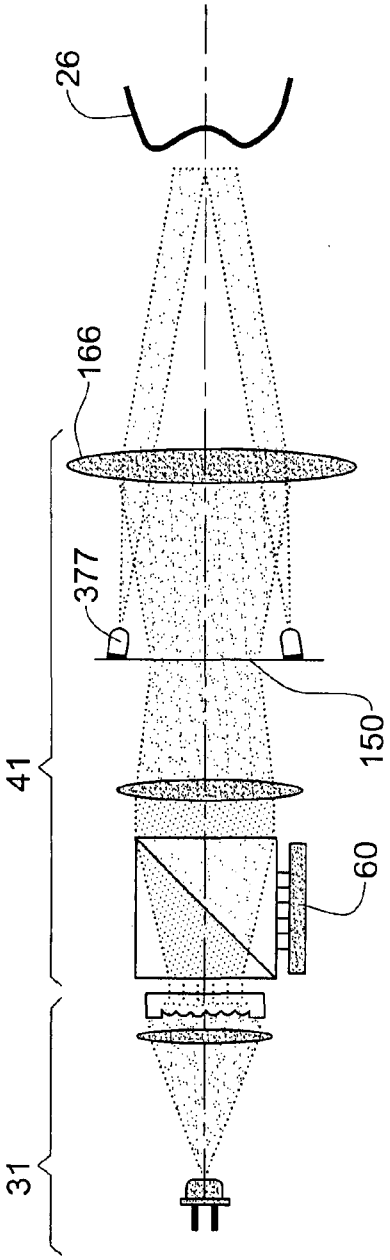

FIG. 8

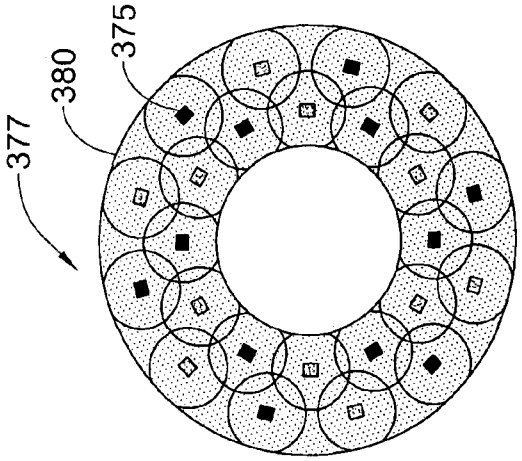

FIG. 9

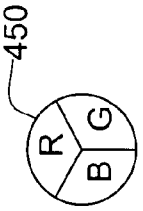

FIG. 10A

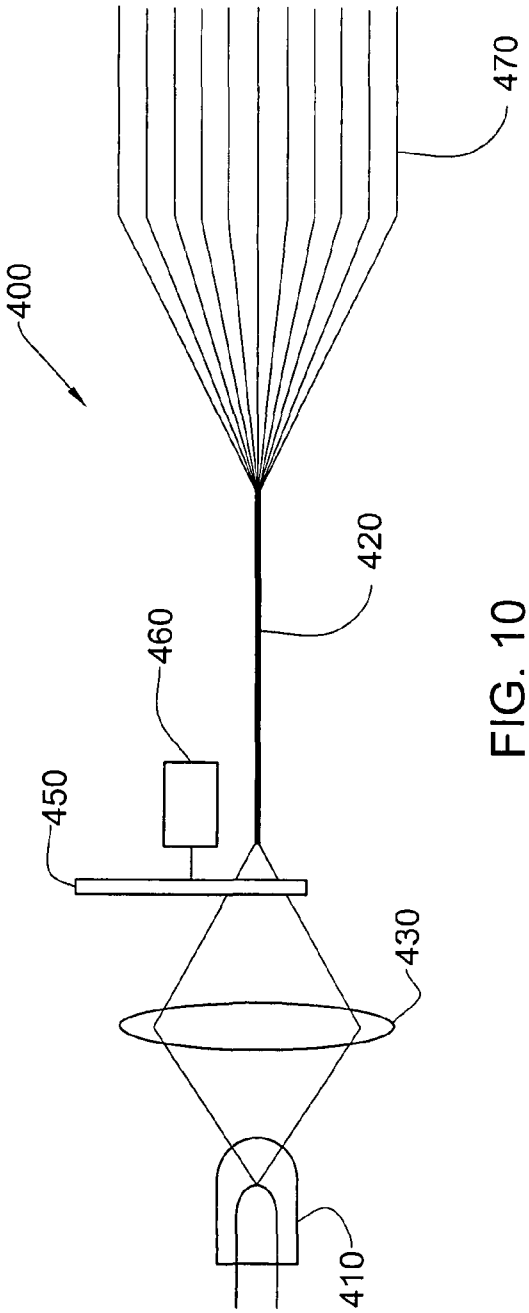

FIG. 10

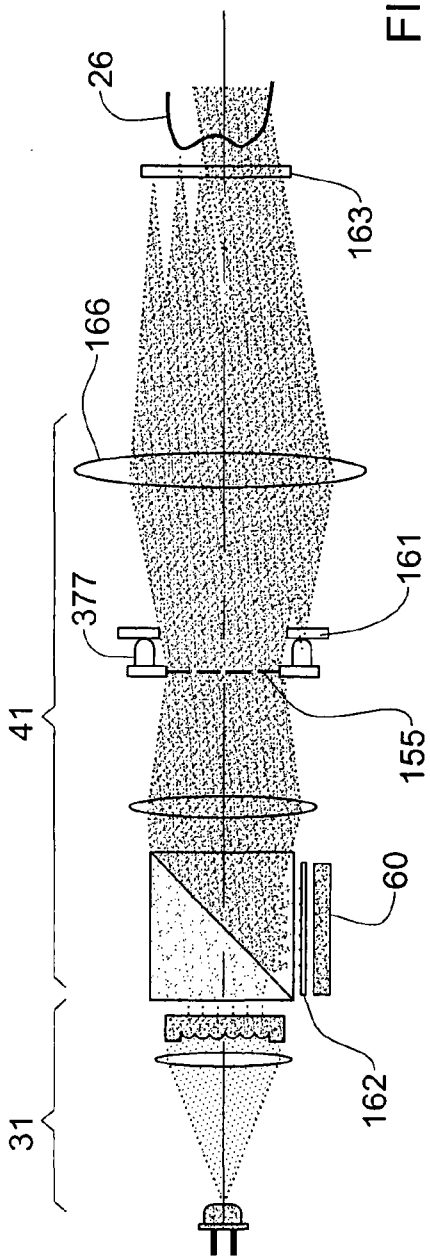

FIG. 11

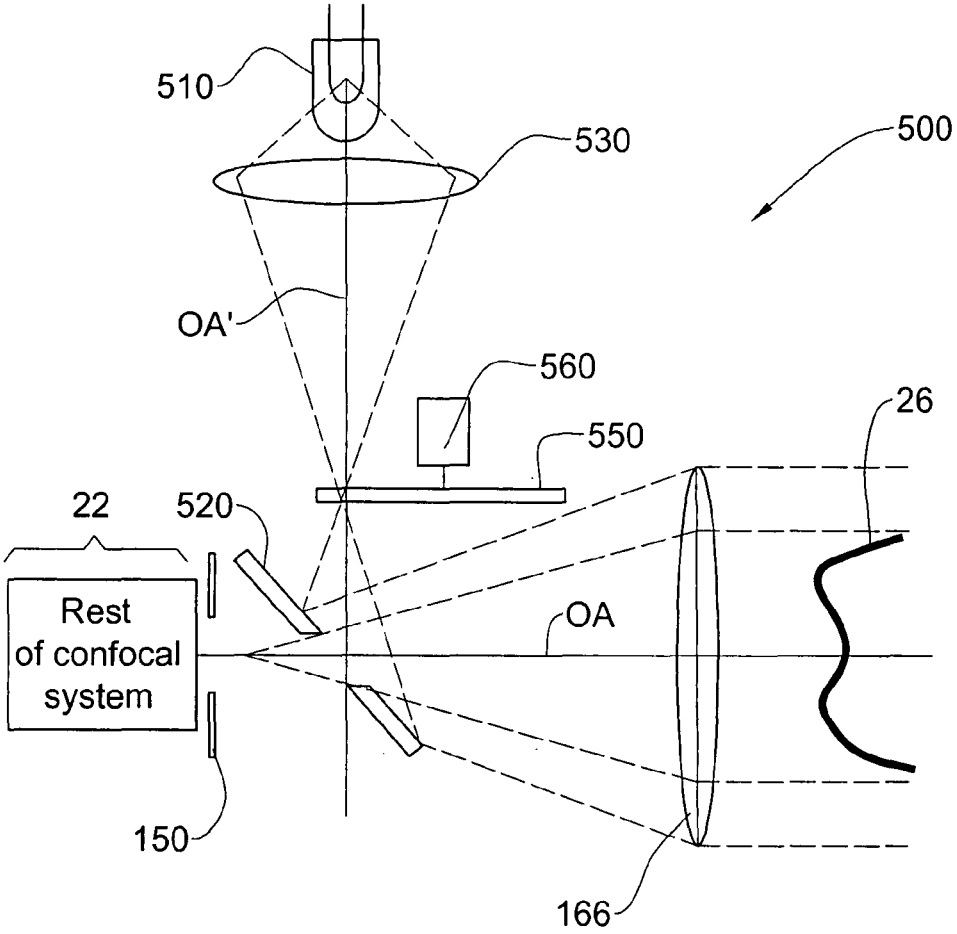
510
530
500
OA'
560
550
26
22
520
Rest
of confocal
system
OA
150
166

FIG. 12

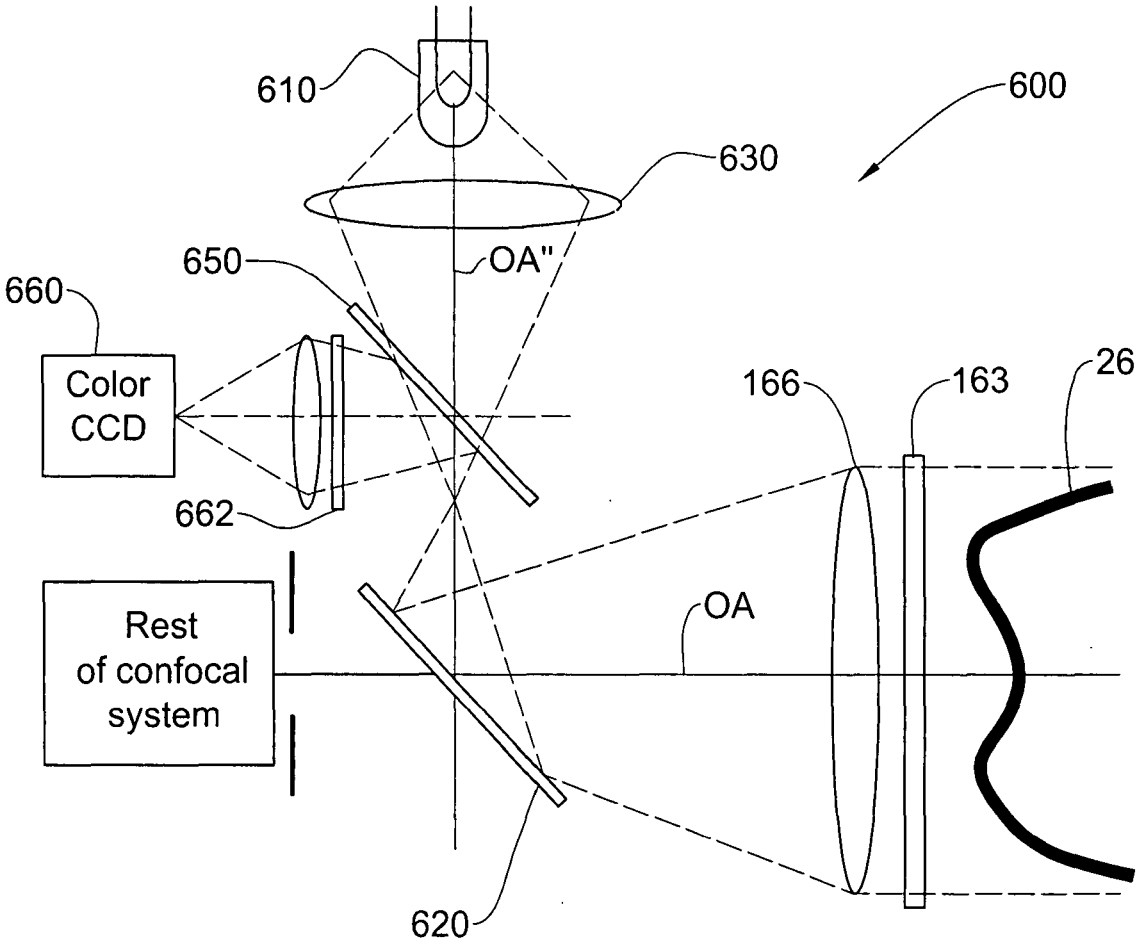
610
600
630
650
OA"
660
Color
CCD
166
163
26
662
Rest
of confocal
system
OA
620

FIG. 13

METHOD AND APPARATUS FOR COLOUR IMAGING A THREE-DIMENSIONAL STRUCTURE

FIELD OF THE INVENTION

[0001] The present invention relates to optical scanners, particularly for providing a digital representation of three-dimensional objects including color. The invention finds particular application in the surveying of the intraoral cavity.

BACKGROUND OF THE INVENTION

[0002] Many methods have been developed for obtaining the three dimensional location of surface points of an object, for a host of applications including, inter alia, the intraoral cavity. Techniques for direct non-contact optical measurement, in particular for direct optical measurement of teeth and the subsequent automatic manufacture of dentures, are known. The term "direct optical measurement" signifies surveying of teeth in the oral cavity of a patient. This facilitates the obtainment of digital constructional data necessary for the computer-assisted design (CAD) or computer-assisted manufacture (CAM) of tooth replacements without having to make any cast impressions of the teeth. Such systems typically include an optical probe coupled to an optical pick-up or receiver such as charge coupled device (CCD) and a processor implementing a suitable image processing technique to design and fabricate virtually the desired product. Such methods include, for example, confocal imaging techniques as described in WO 00/08415 assigned to the present assignee. These methods provide a digital three-dimensional surface model that is inherently monochromatic, i.e., no color information is obtained in the imaging process.

[0003] Associating color information with three-dimensional objects is not straightforward, particularly when the position information is obtained by using a three dimensional scanning method, while the color information is obtained by using a two dimensional scanning method. The problem of conformally mapping the two dimensional color information onto the three dimensional surface model is difficult and it is common for mismatching of the color with three-dimensional points to occur. Essentially, where two-dimensional color detectors are used for obtaining the color information, it is difficult to accurately associate color information from the detectors with the correct points on the three dimensional surface model, particularly where relative movement between the object and the device occurs between the acquisition of the three-dimensional topological data and acquisition of the two-dimensional image data.

[0004] EP 837 659 describes a process and device for obtaining a three dimensional image of teeth. Three-dimensional surface data is obtained by first covering the surface with an opaque, diffusely reflecting material, and the object is illuminated with monochromatic light. The image of the object under the layer is obtained by the process described in U.S. Pat. No. 4,575,805 using intensity pattern techniques. In order to obtain a two-dimensional color image of the object, the reflecting layer has to be removed. The method thus requires the camera to be manually re-aligned so that the two-dimensional color image should more or less correspond to the same part of the object as the three dimensional image. Then, the three dimensional image may be viewed on a screen as a two-dimensional image, and it is possible to superimpose on this two-dimensional image the two-dimensional color image of the teeth taken by the camera.

[0005] U.S. Pat. No. 6,594,539 provides an intraoral imaging system that produces images of a dental surface, including three dimensional surface images and also two dimensional color images, with the same camera.

[0006] In U.S. Pat. No. 5,440,393, the shape and dimensions of a dental patients mouth cavity including upper and lower tooth areas and the jaw structure, are measured by an optical scanner using an external radiation source, whose reflected signals are received externally and converted into electronic signals for analysis by a computer. Both surface radiation and reflection from translucent internal surfaces are scanned, and processing of reflections may involve a triangulation system or holograms.

[0007] In U.S. Pat. No. 5,864,640, a scanner is described having a multiple view detector responsive to a broad spectrum of visible light. The detector is operative to develop several images of a three dimensional object to be scanned. The images are taken from several relative angles with respect to the object. The images depict several surface portions of the object to be scanned. A digital processor, coupled to the detector, is responsive to the images and is operative to develop with a computational unit 3-D coordinate positions and related image information of the surface portions of the object, and provides 3-D surface information that is linked to color information without need to conformally map 2-D color data onto 3-D surface.

[0008] Of general background interest, U.S. Pat. No. 4,836,674, U.S. Pat. No. 5,690,486, U.S. Pat. No. 6,525,819, EP 0367647 and U.S. Pat. No. 5,766,006 describe devices for measuring the color of teeth.

SUMMARY OF THE INVENTION

[0009] In accordance with the present invention, a device and method for determining the surface topology and color of at least a portion of a three dimensional structure is provided. Preferred non-limiting embodiments of the invention are concerned with the imaging of a three-dimensional topology of a teeth segment, optionally including such where one or more teeth are missing. This may allow the generation of data for subsequent use in design and manufacture of, for example, prosthesis of one or more teeth for incorporation into said teeth segment. Particular examples are the manufacture of crowns, bridges dental restorations or dental filings. The color and surface data is provided in a form that is highly manipulable and useful in many applications including prosthesis color matching and orthodontics, among others.

[0010] The determination of the 3D surface topology of a portion of a three-dimensional structure is preferably carried out using a confocal focusing method, comprising:

[0011] (a) providing an array of incident light beams propagating in an optical path leading through a focusing optics and a probing face; the focusing optics defining one or more focal planes forward said probing face in a position changeable by said optics, each light beam having its focus on one of said one or more focal plane; the beams generating a plurality of illuminated spots on the structure;

(b) detecting intensity of returned light beams propagating from each of these spots along an optical path opposite to that of the incident light;

(c) repeating steps (a) and (b) a plurality of times, each time changing position of the focal plane relative to the structure; and

[0012] (d) for each of the illuminated spots, determining a spot-specific position, being the position of the respective focal plane, yielding a maximum measured intensity of a respective returned light beam; and based on the determined spot-specific positions, generating data representative of the topology of said portion.

[0013] The determination of the spot-specific positions in fact amounts to determination of the in-focus distance. The determination of the spot-specific position may be by measuring the intensity per se, or typically is performed by measuring the displacement (S) derivative of the intensity (I) curve (dI/dS) and determining the relative position in which this derivative function indicates a maximum intensity. The term "spot-specific position (SSP)" will, be used to denote the relative in-focus position regardless of the manner in which it is determined. It should be understood that the SSP is always a relative position as the absolute position depends on the position of the sensing face. However the generation of the surface topology does not require knowledge of the absolute position, as all dimensions in the cubic field of view are absolute.

[0014] The SSP for each illuminated spot will be different for different spots. The position of each spot in an X-Y frame of reference is known and by knowing the relative positions of the focal plane needed in order to obtain maximum intensity (namely by determining the SSP), the Z or depth coordinate can be associated with each spot and thus by knowing the X-Y-Z coordinates of each spot the surface topology can be generated.

[0015] In order to determine the Z coordinate (namely the SSP) of each illuminated spot the position of the focal plane may be scanned over the entire range of depth or Z component possible for the measured surface portion. Alternatively the beams may have components, each of which has a different focal plane. Thus, by independent determination of SSP for the different light components, e.g. 2 or 3 with respective corresponding 2 or 3 focal planes, the position of the focal planes may be changed by the focusing optics to scan only part of the possible depth range, with all focal planes together covering the expected depth range. Alternatively, the determination of the SSP may involve a focal plane scan of only part of the potential depth range and for illuminated spots where a maximum illuminated intensity was not reached, the SSP is determined by extrapolation from the measured values or other mathematical signal processing methods. Thus, in each case, a Z-value is obtained for each point along an X-Y grid representing a plurality of light beams. In this manner, a three-dimensional (3D) numerical entity E may be crated, comprising a plurality of coordinates (X, Y, Z) representative of the surface topology of the object being scanned.

[0016] Alternatively, any other suitable method may be employed to obtain the 3D entity E.

[0017] According to the present invention, a two dimensional (2D) color image of the 3D structure that is being scanned is also obtained, but typically within a short time interval with respect to the 3D scan. Further, the 2D color image is taken at substantially the same angle and orientation with respect to the structure as was the case when the 3D scan was taken. Accordingly, there is very little or no substantial distortion between the X-Y plane of 3D scan, and the plane of the image, i.e., both planes are substantially parallel, and moreover substantially the same portion of the structure should be comprised in both the 3D scan and the 2D image. This means that each X-Y point on the 2D image substantially corresponds to a similar point on the 3D scan having the same relative X-Y values. Accordingly, the same point of the structure being scanned has substantially the same X-Y coordinates in both the 2D image and the 3D scan, and thus the color value at each X, Y coordinate of the 2D color scan may be mapped directly to the spatial coordinates in the 3D scan having the same X, Y coordinates, wherein to create a numerical entity I representing the color and surface topology of the structure being scanned.

[0018] Where the X,Y coordinates of the color image do not precisely correspond to those of the 3D scan, for example as may arise where one CCD is for the 3D scanning, while another CCD is used for the 2D color image, suitable interpolation methods may be employed to map the color data to the 3D spartial data.

[0019] To provide a more accurate mapping, it is possible to construct a 2D image along the X-Y plane of the 3D model, and using procedures such as optical recognition, manipulate the color 2D image to best fit over this 3D image. This procedure may be used to correct for any slight misalignment between the 2D color scan and the 3D scan. Once the color 2D image has been suitably manipulated, the color values of the color 2D image are mapped onto the adjusted X-Y coordinates of the 3D scan.

[0020] Thus the present invention provides a relatively simple and effective way for mapping 2D color information onto a 3D surface model.

[0021] The present invention thus provides a device and method for obtaining a numerical entity that represents the color and surface topology of an object. When applied particularly to the intraoral cavity, the device of the invention provides advantages over monochrome 3D scanners, including such scanners that are based on confocal focusing techniques. For example, the 2D color image capability on its own enables the dental practitioner to identify the area of interest within the oral cavity with a great degree of confidence in order to better aim the device for the 3D scanning. In other words, an improved viewfinder is automatically provided. Further, rendition of a full color 3D image of the target area can help the practitioner to decide on the spot whether the scan is sufficiently good, or whether there are still parts of the teeth or soft tissues that should have been included, and thus help the practitioner to decide whether or not to acquire another 3D color entity.

[0022] Creation of a color 3D entity that is manipulable by a computer is extremely useful in enabling the practitioner to obtain data from such an entity that is useful for procedures carried out in the dental cavity.

[0023] Thus, according to the present invention, a device is provided for determining the surface topology and associated color of at least a portion of a three dimensional structure, comprising:

[0024] scanning means adapted for providing depth data of said portion corresponding to a two-dimensional reference array substantially orthogonal to a depth direction;

[0025] imaging means adapted for providing two-dimensional color image data of said portion associated with said reference array;

[0026] wherein the device is adapted for maintaining a spatial disposition with respect to said portion that is substantially fixed during operation of said scanning means and said imaging means. In other words, operation of the scanning means and the imaging means is substantially or effectively simultaneous in practical terms, and thus the actual time interval that may exist between operation of the two means is so short that the amplitude of any mechanical vibration of the device or movement of the oral cavity will be so small as can be ignored.

[0027] The device is adapted for providing a time interval between acquisition of said depth data and acquisition of said color image data such that substantially no significant relative movement between said device and said portion occurs. The time interval may be between about 0 seconds to about 100 milliseconds, for example 5, 10, 20, 30, 40, 50, 60, 70, 80, 90 or 100 milliseconds, and preferably between about 0 to about 50 milliseconds, and more preferably between about 0 and 20 milliseconds.

[0028] The device further comprise processing means for associating said color data with said depth data for corresponding data points of said reference array. In described embodiments, the operation of said scanning means is based on confocal imaging techniques. Such scanning means may comprise:

[0029] a probing member with a sensing face;

[0030] first illumination means for providing a first array of incident light beams transmitted towards the structure along an optical path through said probing unit to generate illuminated spots on said portion along said depth direction, wherein said first array is defined within said reference array;

[0031] a light focusing optics defining one or more focal planes forward said probing face at a position changeable by said optics, each light beam having its focus on one of said one or more focal plane;

[0032] a translation mechanism for displacing said focal plane relative to the structure along an axis defined by the propagation of the incident light beams;

[0033] a first detector having an array of sensing elements for measuring intensity of each of a plurality of light beams returning from said spots propagating through an optical path opposite to that of the incident light beams;

[0034] a processor coupled to said detector for determining for each light beam a spot-specific position, being the position of the respective focal plane of said one or more focal planes yielding maximum measured intensity of the returned light beam, and based on the determined spot-specific positions, generating data representative of the topology of said portion.

[0035] The first array is arranged to provide depth data at a plurality of predetermined spatial coordinates substantially corresponding to the spatial disposition of said incident light beams.

[0036] The first illumination means comprises a source emitting a parent light beam and a beam splitter for splitting the parent beam into said array of incident light beams. The first illumination means may comprise a grating or microlens array.

[0037] The device may comprise a polarizer for polarizing said incident light beams are polarized. Further, the device may comprise a polarization filter for filtering out from the returned light beams light components having the polarization of the incident light beams.

[0038] The illumination unit may comprise at least two light sources and each of said incident beams is composed of light components from the at least two light sources. The at least two light sources emit each a light component of different wavelength. The light directing optics defines a different focal plane for each light component and the detector independently detects intensity of each light components.

[0039] The at least two light sources may be located so as to define optical paths of different lengths for the incident light beams emitted by each of the at least two light sources.

[0040] Typically, the focusing optics operates in a telecentric confocal mode.

[0041] Optionally, the light directing optics comprises optical fibers.

[0042] Typically, the sensing elements are an array of charge coupled devices (CCD). The detector unit may comprise a pinhole array, each pinhole corresponding to one of the CCDs in the CCD array.

[0043] The operation of said imaging means may be based on:

[0044] illuminating said portion with three differently-colored illumination radiations, the said illuminations being combinable to provide white light,

[0045] capturing a monochromatic image of said portion corresponding to each said illuminating radiation, and

[0046] combining the monochromatic images to create a full color image,

[0047] wherein each said illuminating radiation is provided in the form of a second array of incident light beams transmitted towards the portion along an optical path through said probing unit to generate illuminated spots on said portion along said depth direction, wherein said second array is defined within said reference frame.

[0048] The second array is arranged to provide color data at a plurality of spatial coordinates substantially corresponding to the spatial coordinates of said first array. The device may comprise color illumination means adapted for providing three second illuminating radiations, each of a different color. The color illumination means comprises second illumination means for providing said three second illuminating radiations, each of a different color. Alternatively, the color illumination means comprises second illumination means for providing two said second illuminating radiations, and wherein said first illumination means provides another said second illuminating radiation each said second illuminating radiation being of a different color. Optionally, each one of said second illumination radiations is a different one of red,

green or blue light. The second illumination means may comprise radiation transmission elements that are configured to be located out of the path of said light beams or said returned light beam at least within said light focusing optics. The probing member may be made from a light transmissive material having an upstream optical interface with said light focusing optics and a reflective face for reflecting light between said optical interface and said sensing face. The second illumination means may be optically coupled to said optical interface for selectively transmitting illuminating radiations in at least two colors to said portion via said sensing face. The color illumination means may comprise second illumination means for providing two said second illuminating radiations, and wherein said first illumination means provides another said second illuminating radiation each said second illuminating radiation being of a different color. The probing member may comprise a removable sheath having an inner surface substantially complementary to an outer surface of said probing member, and having a window in registry with said sensing face, wherein said sheath is made from a waveguiding material and is adapted to transmit said light from said second illuminating means from an upstream face thereof to a downstream face associated with said window. The second illumination means may be optically coupled to said upstream face for selectively transmitting said second illuminating radiations in at least two colors to said portion via said downstream face. Preferably, the sheath is disposable after use with a patient.

[0049] In another embodiment, the reflective face comprises a dichroic coating, having relatively high reflectivity and low optical transmission properties for a said second illuminating radiation provided by said first illumination means, and relatively low reflectivity and high optical transmission properties for the two said second illuminating radiations provided by said second illumination means.

[0050] The second illumination means may be adapted for providing second illuminating radiations within said light focusing optics. In particular, the second illumination means may be adapted for providing second illuminating radiations at an aperture stop plane of said light focusing optics. The second illumination means may be provided on a bracket having an aperture configured to allow said light beams and said returning light beams to pass therethrough without being optically affected by said bracket.

[0051] Optionally, the device further comprises:

[0052] a first polarizing element located just downstream of said illumination means so as to polarize the light emitted therefrom;

[0053] a second polarizing element located just upstream of said first detector, wherein said second polarizing element is crossed with respect to the first polarizing element; and

[0054] a quarter waveplate at the downstream end of said device.

[0055] Further optionally the second illumination means are adapted for selective movement in the depth direction.

[0056] The device may comprise a mirror inclined to the optical axis of said light focusing optics and having an aperture configured to allow said light beams and said returning light beams to pass therethrough without being optically affected by said mirror, and wherein said second illumination means comprises at least one white illumination source optically coupled with suitable color filters, said filters selectively providing illumination radiation in each color in cooperation with said white illumination source, wherein said mirror is coupled to said white illumination source to direct radiation therefrom along said optical axis. The white illumination source may comprise a phosphorus InGaN LED. The filters may be arranged on sectors of a rotatable disc coupled to a motor, predetermined selective angular motion of said disc selectively couples said white illumination source to each said filter in turn.

[0057] Optionally, the second illumination means are in the form of suitable LED's, comprising at least one LED for providing illumination radiation in each color. Optionally, the second illumination means are in the form of suitable LED's, comprising at least one white illumination source optically coupled with suitable color filters, said filters selectively providing illumination radiation in each color in cooperation with said white illumination source. The white illumination source may comprise a phosphorus InGaN LED. The filters may be arranged on sectors of a rotatable disc coupled to a motor, predetermined selective angular motion of said disc selectively couples said white illumination source to each said filter in turn. The device may further comprise a plurality of optical fibers in optical communication with said filters and with radiation transmission elements comprised in said second illumination means.

[0058] The first detector is adapted for selectively measuring intensity of each said second illuminating radiation after reflection from said portion.

[0059] Alternatively, the operation of said imaging means is based on illuminating said portion with substantially white illumination radiation, and capturing a color image of said portion, wherein said white illuminating radiation is provided in the form of a second array of incident light beams transmitted towards the portion along an optical path through said probing unit to generate illuminated spots on said portion along said depth direction, wherein said second array is defined within said reference frame. The second array is arranged to provide color data at a plurality of spatial coordinates substantially corresponding to the spatial coordinates of said first array. The imaging means comprises:—

[0060] white illumination radiation means;

[0061] second detector having an array of sensing elements for measuring intensity of said white illuminating radiation after reflection from said portion.

[0062] Alternatively, the operation of said imaging means is based on illuminating said portion with substantially white illumination radiation, selectively passing radiation reflected from said portion through a number of color filters, capturing a monochromatic image of said portion corresponding to each said filter, and combining the monochromatic images to create a full color image, wherein said illuminating radiation is provided in the form of a second array of incident light beams transmitted towards the portion along an optical path through said probing unit to generate illuminated spots on said portion along said depth direction, wherein said second array is defined within said reference frame. The second array is arranged to provide color data at a plurality of spatial coordinates substantially corresponding to the spatial coordinates of said first array.

[0063] Alternatively, the operation of said imaging means is based on illuminating said portion with three differently-colored illumination radiations, capturing a monochromatic image of said portion corresponding to each said illuminating radiation, and combining the monochromatic images to create a full color image, wherein each said illuminating radiation is provided in the form of a second array of incident light beams transmitted towards the portion along an optical path through said probing unit to generate illuminated spots on said portion along said depth direction, wherein said second array is defined within said reference frame, and wherein said illuminating radiations are provided by said first illumination source. The second array is arranged to provide color data at a plurality of spatial coordinates substantially corresponding to the spatial coordinates of said first array.

[0064] The device may further comprise a tri-color sequence generator for controlling the illumination of said portion with said second illuminating radiations.

[0065] The device further comprises a processor coupled to said detector for conformally mapping color data provided by said imaging means to said depth data provided by said scanning means for each said spatial coordinates of said first array to provide a color three-dimensional numerical entity comprising a plurality of data points, each data point comprising three-dimensional surface coordinate data and color data associated therewith. The device may also optionally comprise a unit for generating manufacturing data for transmission to CAD/CAM device based on said entity, and a communication port of a communication medium.

[0066] The device is adapted for determining color and surface topology of a teeth portion, but may be used for determining color and surface topology of any suitable surface.

[0067] The present invention is also directed to a method for determining the surface topology and associated color of at least a portion of a three dimensional structure, comprising:

[0068] (a) providing depth data of said portion corresponding to a two-dimensional reference array substantially orthogonal to a depth direction;

[0069] (b) providing two-dimensional image data of said portion associated with said reference array;

[0070] (c) ensuring that a spatial disposition with respect to said portion during steps (a) and (b) is substantially fixed;

[0071] (d) conformally mapping said color data to said depth data for said reference array.

[0072] Preferably, in step (c), a minimum time interval is allowed between acquisition of said depth data and acquisition of said image data. The time interval may be between about 0 seconds to about 100 milliseconds, preferably between 0 and 50 milliseconds, and more preferably between 0 and 20 milliseconds.

[0073] In described embodiments, the depth data is provided using confocal imaging techniques. The method can then comprise:

[0074] (i) providing a first array of incident light beams defined within said reference array propagating in an optical path leading through a focusing optics and through a probing face; the focusing optics defining one or more focal planes forward said probing face in a position changeable by said optics, each light beam having its focus on one of said one or more focal plane; the beams generating a plurality of illuminated spots on the structure;

[0075] (ii) detecting intensity of returned light beams propagating from each of these spots along an optical path opposite to that of the incident light;

[0076] (iii) repeating steps (i) and (ii) a plurality of times, each time changing position of the focal plane relative to the structure;

[0077] (iv) for each of the illuminated spots, determining a spot-specific position, being the position of the respective focal plane yielding a maximum measured intensity of a respective returned light beam; and

[0078] (v) generating data representative of the topology of said portion.

[0079] Step (ii) may be based on illuminating said portion with at least three differently-colored illumination radiations, said illumination radiations being combinable to produce white radiation, capturing a monochromatic image of said portion corresponding to each said illuminating radiation, and combining the monochromatic images to create a full color image, wherein each said illuminating radiation is provided in the form of a second array of incident light beams transmitted towards the portion along an optical path through said probing unit to generate illuminated spots on said portion along said depth direction, wherein said second array is defined within said reference frame. The second array is arranged to provide color data at a plurality of spatial coordinates substantially corresponding to the spatial coordinates of said first array.

[0080] Optionally, the sources for the at least three colored illuminations may be located at the confocal system aperture stop, and facing the objective lens of the system. Preferably, the illumination sources are configured to have a relatively low numerical aperture compared with that of the first array of light beams. Further preferably, the confocal system is configured for chromatically dispersing said colored illuminations therethrough.

[0081] Preferably, the method further comprises providing an improved focus 2D color image of said structure, comprising:—

[0082] (I) sequentially illuminating the structure with each one of a plurality of illuminations, each said illumination having a different wavelength in the visible spectrum;

[0083] (II) providing a monochrome image of the structure when illuminated with each illumination in (I);

[0084] (III) manipulating image data obtained in (II) to provide a best focus composite image;

[0085] (IV) manipulating image data in (II) and (III) to provide a composite focused color image of the structure.

[0086] Further preferably, the said sources for the colored illuminations are moveable in the depth direction.

[0087] Optionally, the method of the invention further comprises the steps of:

[0088] polarizing the emitted colored illuminations by means of a first polarizing element;

[0089] modifying the said polarized color illuminations on the way to the structure and on their return therefrom by means of a quarter waveplate;

[0090] causing the returning color illuminations to pass through a second polarizing element located just upstream of said first detector, wherein said second polarizing element is crossed with respect to the first polarizing element.

[0091] Step (ii) may be based on illuminating said portion with substantially white illumination radiation, selectively passing radiation reflected from said portion through a number of color filters, capturing a monochromatic image of said portion corresponding to each said filter, and combining the monochromatic images to create a full color image, wherein said illuminating radiation is provided in the form of a second array of incident light beams transmitted towards the portion along an optical path through said probing unit to generate illuminated spots on said portion along said depth direction, wherein said second array is defined within said reference frame. The second array is arranged to provide color data at a plurality of spatial coordinates substantially corresponding to the spatial coordinates of said first array.

[0092] Step (ii) may be based on illuminating said portion with three differently-colored illumination radiations, capturing a monochromatic image of said portion corresponding to each said illuminating radiation, and combining the monochromatic images to create a full color image, wherein each said illuminating radiation is provided in the form of a second array of incident light beams transmitted towards the portion along an optical path through said probing unit to generate illuminated spots on said portion along said depth direction, wherein said second array is defined within said reference frame, and wherein said illuminating radiations are provided by said first illumination source. The second array is arranged to provide color data at a plurality of spatial coordinates substantially corresponding to the spatial coordinates of said first array.

[0093] The data representative of said topology may be used for constructing an object to be fitted within said structure, or may be converted into a form transmissible through a communication medium to recipient. Typically, the structure is a teeth segment. The structure may be a teeth segment with at least one missing tooth or a portion of a tooth and said object is said at least one missing tooth or the portion of the tooth. Thus, for example, steps (i) to (v) may be repeated for two different surfaces of said structure to provide surface topologies thereof, and the surface topologies may then be combined to obtain color and topological data representative of said structure.

[0094] The method of the invention, and also the operation of the device of the present invention, may be modified to take account of any possible relative movement between the device and the intra oral cavity, for example as follows:—

[0095] (a) providing depth data of said portion corresponding to a two-dimensional reference array substantially orthogonal to a depth direction;

[0096] (b) providing two-dimensional image data of said portion associated with said reference array;

[0097] (c) repeating step (a);

[0098] (d) for each image color data point obtained in step (b), i.e., for each particular (x, y) point on the array for which a color value was obtained in step (b), providing an estimated value for depth, based on the depth values obtained in steps (a) and (c) for the same part of the array, i.e. based on the Z-values obtained for the same (x, y) point in steps (a) and (c). The estimated value may be based on a simple arithmetic mean, on a weighted mean, or on any suitable empirical or theoretical formula, algorithm and so on.

[0099] Of course, step (a) may be repeated a number of times consecutively before step (b), and optionally also after step (b), the time intervals between each step being taken. In any case, for each point on the array (x, y), the values of depth Z may be plotted against elapsed time, for steps (a) (single or repeated), through step (b) and steps (c) (single or repeated), and the best estimate of the value of Z corresponding to the time interval when step (b) was carried out can be calculated, using, for example, any suitable interpolation or curve-fitting method.

[0100] Alternatively, the method of the invention, and thus the operation of the device of the present invention, may be modified to take account of any possible relative movement between the device and the intra oral cavity, for example as follows:

[0101] (a) providing two-dimensional image data of said portion associated with said reference array;

[0102] (b) providing depth data of said portion corresponding to a two-dimensional reference array substantially orthogonal to a depth direction;

[0103] (c) repeating step (a);

[0104] (d) for each depth data point obtained in step (b), i.e., for each particular (x, y) point on the array for which a depth value was obtained in step (b), providing an estimated value for color, based on the color values obtained in steps (a) and (c) for the same part of the array, i.e. based on the C-values obtained for the same (x, y) point in steps (a) and (c). The estimated value may be based on a simple arithmetic mean, on a weighted mean, or on any suitable empirical or theoretical formula, algorithm and so on.

[0105] Of course, step (a) may optionally be repeated a number of times consecutively before step (b), and optionally also after step (b), the time intervals between each step being taken. In any case for each point on the array (x, y), the values of color C may be plotted against elapsed time, for steps (a) (single or repeated), through step (b) and steps (c) (single or repeated), and the best estimate of the value of C corresponding to the time interval when step (b) was carried out can be calculated, using, for example, any suitable interpolation or curve-fitting method.

[0106] Optionally, the steps of providing color values and depth values may be repeated in any sequence, for example in alternate sequence, and a suitable color value may be associated with a corresponding depth value, similarly to the manner described above, mutatis mutandis.

[0107] The invention also relates to a method for reconstruction of color and topology of a three-dimensional structure comprising:

[0108] determining surface topologies from at least two different positions or angular locations relative to the structure, by the method of the invention described above; combining the surface topologies to obtain color and topological data representative of said structure.

[0109] The method may be applied to the reconstruction of topology of a teeth portion, and comprise the steps:

[0110] determining surface topologies of at least a buccal surface and a lingual surface of the teeth portion;

[0111] combining the surface topologies to obtain data representative of a three-dimensional structure of said teeth portion.

[0112] The method may be applied to obtaining data representative of a three-dimensional structure of a teeth portion with at least one missing tooth or a portion of a tooth.

[0113] The data may be used in a process of designing or manufacturing of a prostheses of said at least one missing tooth or a portion of a tooth. Such a prosthesis may be, for example, a crown, a bridge, a dental restoration or a dental filing.

BRIEF DESCRIPTION OF THE DRAWINGS

[0114] in order to understand the invention and to see how it may be carried out in practice, a number of embodiments will now be described, by way of non-limiting example only, with reference to the accompanying drawings, in which:

[0115] FIG. **1** illustrates the main elements of preferred embodiments of the invention.

[0116] FIGS. **2**A, **2**B, **2**C graphically illustrates the creation of a three dimensional color entity from a three dimensional monochrome entity and a two dimensional color entity.

[0117] FIG. **3** graphically illustrates an alignment procedure according to the invention for aligning the X-Y coordinates of a three dimensional monochrome entity with corresponding coordinates of a two dimensional color entity.

[0118] FIGS. **4**A and **4**B schematically illustrate the main elements of a portion of the invention used for providing a three dimensional monochrome entity.

[0119] FIGS. **5**A, **5**B, **5**C illustrate in plan view, side view and isometric view, respectively, a probe used in first embodiment of the invention to provide a two dimensional color entity.

[0120] FIG. **6** illustrates in side view a sheath for a probe used in second embodiment of the invention to provide a two dimensional color entity.

[0121] FIG. **7**A illustrates in side view a probe used in third embodiment of the invention to provide a two dimensional color entity. FIG. **7**B illustrates the transmission and reflection characteristics of a typical dichroic coating used in the probe of FIG. **7**A.

[0122] FIG. **8** illustrates in side view, the general arrangement of the main elements used in fourth embodiment of the invention to provide a two dimensional color entity.

[0123] FIG. **9** illustrates an LED arrangement used with the embodiment of FIG. **8**.

[0124] FIG. **10** illustrates an alternative illumination arrangement used with the embodiment of FIG. **8**. FIG. **10**A illustrates details of the tri-color disc used with the illumination arrangement of FIG. **10**.

[0125] FIG. **11** illustrates in side view the general arrangement of the main elements used in fifth embodiment of the invention to provide a two dimensional color entity.

[0126] FIG. **12** illustrates in side view the general arrangement of the main elements used in sixth embodiment of the invention to provide a two dimensional color entity.

[0127] FIG. **13** illustrates in side view the general arrangement of the main elements used in seventh embodiment of the invention to provide a two dimensional color entity.

DETAILED DESCRIPTION

[0128] Reference is first being made to FIG. **1** which illustrates the general relationship between the various elements of the device of the invention, generally designated with the numeral **100**, according to the embodiments described herein.

[0129] The device **100** comprises a main illumination source **31** for illuminating the object of interest **26**, typically a part of the intraoral cavity, and is optically coupled to main optics **41** to provide depth Z values for an array range of X-Y points (according to a known frame of reference) along the surface of the object **26**. Detection optics **60** comprises an image sensor, typically a CCD, that is preferably monochromatic to maximise the resolution of the device, and which typically defines the X-Y frame of reference. Alternatively, the CCD may be adapted to receive color images. The detection optics **60** receives image data from the main optics **41** and the image processor **24** determines the depth Z values for each X-Y point illuminated on the object **26** based on this image data. In this manner, a manipulable three-dimensional numerical entity E comprising the surface coordinates of the object **26**.

[0130] The device **100** further comprises color illuminating means, such as for example a tri-color sequence generator **74**, for selectively illuminating the object **26** with suitable colors, typically Green, Red and Blue, and for each such monochromatic illumination, a two dimensional image of the object **26** is captured by the detection optics **60**. The processor **24** then processes the three differently colored monochromatic images and combines the same to provide a full color 2D image of the object. The device **100** is configured for providing color data for an array of X-Y points that is according to the same frame of reference as the X-Y array used for obtaining the 3D entity.

[0131] The processor **24** aligns the 2D color image with the 3D entity previously created, and then provides color values to this entity by mapping color values to the entity at aligned X-Y points. Such alignment is straightforward because both the 3D data and the 2D color data are referenced to the same X-Y frame of reference. Referring to FIGS. **2**A, **2**B, **2**C, the mapping procedure is performed as follows. A three-dimensional numerical entity E is obtained by determining depth Z-values for a grid of X-Y points, illuminated via main optics **41** and determined by image processor **24**. The entity E thus comprises an array of (X, Y, Z) points, as illustrated in FIG. **2**A. The X-Y plane of entity E is substantially parallel to the sensing face of the image

sensing means of the detection optics **60**, typically a CCD. Almost concurrently, i.e., either just before or just after the readings for determining the 3D entity E are obtained by the detection optics **60**, a 2D color image of the object **26** is taken using the same detection optics **60**, at substantially the same relative spatial disposition between the detection optics **60** and the object **26**, FIG. **2**B. If a monochromatic CCD is used, the 2D color image obtained is a composite created from three separate monochromatic images, each provided by illuminating the object **26** with a different color, such as for example red, green and blue. The 2D color image thus corresponds to another entity N comprised of the location and color value of each pixel forming this image, (X', Y', C). The X'-Y' coordinates of the pixels are on a plane substantially parallel to the X-Y plane of the entity E, and furthermore these coordinates represent substantially the same part of the object **26** as the X-Y coordinates of entity E. The reason for this is that the optical information that is used for creating both the 3D entity E and the color 2D entity N are obtained almost simultaneously with a very small time interval therebetween, and typically there is insufficient time for any significant relative movement between the image plane of the detection optics **60** and the object **26** to have occurred between the two scans. Thus, similar X-Y and X'-Y' coordinates in the entities E and N, respectively, will substantially represent the same part of the object **26**. Accordingly, the color value C of each pixel of entity N can be mapped to the data point of entity E having X-Y coordinates that are the same as the X'-Y' coordinates of the pixel, whereby to create another entity I comprising surface coordinate and color data, (X, Y, Z, C), as illustrated in FIG. **2**C.

[**0132**] Were the relative angle and disposition between the plane of the sensing face of the detection optics **60** with respect to the object **26** change significantly between the 2D and the 3D scans, then the X-Y coordinates of entity E having similar values to the X'-Y' coordinates of entity N could correspond to different parts of the object **26**, and thus it may then be difficult to map the color values of entity N to entity E. However, if only a small movement between the detection optics **60** with respect to the object **26** occurs, particularly involving a relative translation or a rotation about the depth direction (Z), but substantially no change in the angular disposition between detection optics **60** and the object **26** about the X or Y axes, it may still be possible to map the color values of entity N to entity E, but first an alignment procedure must be followed.

[**0133**] Referring to FIG. **3**, such an alignment procedure may be based on optical character recognition (OCR) techniques. In the X-Y plane, the X-Y coordinates of entity E can be divided up into two groups, one group comprising Z values corresponding to the depth of the object, and a second group for which no reasonable Z value was found, and this group corresponds to the background relative to object **26**. The profiles of shapes represented by the X-Y coordinates of the first group of entity E, herein referred to as another entity E', are then optically compared with profiles of shapes corresponding to the X'-Y' coordinates of entity N, herein referred to as another entity N'. Accordingly, entity E' is translated or rotated (coplanarly) with respect to entity N' until a best fit between the optical shapes between the two entities is obtained, using OCR techniques that are well known in the art. Typically, the image processor, or another computer, will attempt to align the outer border of the object **26** as seen along the Z-axis and encoded in entity E with optical elements in the 2D color image encoded in entity N. Thereafter, the color value C of each X'-Y' coordinate of entity N is mapped to the appropriate data point of entity E having the aligned X-Y coordinates corresponding thereto. The color mapping operation to create entity I may be executed by any suitable microprocessor means, typically processor **24** of the device **100** (FIG. **4**B).

[**0134**] The main optics **41**, main illumination source **31**, detection optics **60** and image processor **24** are now described with reference to FIGS. **4**A and **4**B which illustrate, by way of a block diagram an embodiment of a system **20** for confocal imaging of a three dimensional structure according to WO 00/08415 assigned to the present assignee, the contents of which are incorporated herein. Alternatively, any suitable confocal imaging arrangement may be used in the present invention.

[**0135**] The system **20** comprises an optical device **22** coupled to a processor **24**. Optical device **22** comprises, in this specific embodiment, a semiconductor laser unit **28** emitting a laser light, as represented by arrow **30**. The light passes through a polarizer **32** which gives rise to a certain polarization of the light passing through polarizer **32**. The light then enters into an optic expander **34** which improves the numerical aperture of the light beam **30**. The light beam **30** then passes through a module **38**, which may, for example, be a grating or a micro lens array which splits the parent beam **30** into a plurality of incident light beams **36**, represented here, for ease of illustration, by a single line. The operation principles of module **38** are known per se and the art and these principles will thus not be elaborated herein.

[**0136**] The optical device **22** further comprises a partially transparent mirror **40** having a small central aperture. It allows transfer of light from the laser source through the downstream optics, but reflects light travelling in the opposite direction. It should be noted that in principle, rather than a partially transparent mirror other optical components with a similar function may also be used, e.g. a beam splitter. The aperture in the mirror **40** improves the measurement accuracy of the apparatus. As a result of this mirror structure the light beams will yield a light annulus on the illuminated area of the imaged object as long as the area is not in focus; and the annulus will turn into a completely illuminated spot once in focus. This will ensure that a difference between the measured intensity when out-of- and in-focus will be larger. Another advantage of a mirror of this kind, as opposed to a beam splitter, is that in the case of the mirror internal reflections which occur in a beam splitter are avoided, and hence the signal-to-noise ratio improves.

[**0137**] The unit further comprises a confocal optics **42**, typically operating in a telecentric mode, a relay optics **44**, and an endoscopic probing member **46**. Elements **42**, **44** and **46** are generally as known per se. It should however be noted that telecentric confocal optics avoids distance-introduced magnification changes and maintains the same magnification of the image over a wide range of distances in the Z direction (the Z direction being the direction of beam propagation). The relay optics enables to maintain a certain numerical aperture of the beam's propagation.

[**0138**] The endoscopic probing member **46** typically comprises a rigid, light-transmitting medium, which may be a hollow object defining within it a light transmission path or

an object made of a light transmitting material, e.g. a glass body or tube. At its end, the endoscopic probe typically comprises a mirror of the kind ensuring a total internal reflection and which thus directs the incident light beams towards the teeth segment **26**. The endoscope **46** thus emits a plurality of incident light beams **48** impinging on to the surface of the teeth section.

[**0139**] Incident light beams **48** form an array of light beams arranged in an X-Y plane, in the Cartesian frame **50**, propagating along the Z axis. As the surface on which the incident light beams hits is an uneven surface, the illuminated spots **52** are displaced from one another along the Z axis, at different (X_i,Y_i) locations. Thus, while a spot at one location may be in focus of the optical element **42**, spots at other locations may be out-of-focus. Therefore, the light intensity of the returned light beams (see below) of the focused spots will be at its peak, while the light intensity at other spots will be off peak. Thus, for each illuminated spot, a plurality of measurements of light intensity are made at different positions along the Z-axis and for each of such (X_i,Y_i) location, typically the derivative of the intensity over distance (Z) will be made, the Z_i yielding maximum derivative, Z_0, will be the in-focus distance. As pointed out above, where, as a result of use of the punctured mirror **40**, the incident light forms a light disk on the surface when out of focus and a complete light spot only when in focus, the distance derivative will be larger when approaching in-focus position thus increasing accuracy of the measurement.

[**0140**] The light scattered from each of the light spots includes a beam travelling initially in the Z-axis along the opposite direction of the optical path traveled by the incident light beams. Each returned light beam **54** corresponds to one of the incident light beams **36**. Given the unsymmetrical properties of mirror **40**, the returned light beams are reflected in the direction of the detection optics **60**. The detection optics **60** comprises a polarizer **62** that has a plane of preferred polarization oriented normal to the plane polarization of polarizer **32**. The returned polarized light beam **54** pass through an imaging optic **64**, typically a lens or a plurality of lenses, and then through a matrix **66** comprising an array of pinholes. CCD camera has a matrix or sensing elements each representing a pixel of the image and each one corresponding to one pinhole in the array **66**.

[**0141**] The CCD camera is connected, to the image-capturing module **80** of processor unit **24**. Thus, each light intensity measured in each of the sensing elements of the CCD camera is then grabbed and analyzed, in a manner to be described below, by processor **24**.

[**0142**] Unit **22** further comprises a control module **70** connected to a controlling operation of both semi-conducting laser **28** and a motor **72**. Motor **72** is linked to telecentric confocal optics **42** for changing the relative location of the focal plane of the optics **42** along the Z-axis. In a single sequence of operation, control unit **70** induces motor **72** to displace the optical element **42** to change the focal plane location and then, after receipt of a feedback that the location has changed, control module **70** will induce laser **28** to generate a light pulse. At the same time, it will synchronize image-capturing module **80** to grab data representative of the light intensity from each of the sensing elements. Then in subsequent sequences the focal plane will change in the same manner and the data capturing will continue over a wide focal range of optics **44**.

[**0143**] Image capturing module **80** is connected to a CPU **82**, which then determines the relative intensity in each pixel over the entire range of focal planes of optics **42**, **44**. As explained above, once a certain light spot is in focus, the measured intensity will be maximal. Thus, by determining the Z_i corresponding to the maximal light intensity or by determining the maximum displacement derivative of the light intensity, for each pixel, the relative position of each light spot along the Z-axis can be determined. Thus, data representative of the three-dimensional pattern of a surface in the teeth segment, can be obtained. This three-dimensional representation may be displayed on a display **84** and manipulated for viewing, e.g. viewing from different angles, zooming-in or out, by the user control module **86** (typically a computer keyboard).

[**0144**] The device **100** further comprises means for providing a 2D color image of the same object **26**, and any suitable technique may be used for providing the color image. A number of such techniques are described below.

[**0145**] The first technique is based on illuminating the object **26** sequentially with three different colored lights such as red, green and blue, and capturing a monochromatic image corresponding to each color via CCD **68** and the image capture device **80** (see FIGS. **4**A, **4**B). Referring to FIG. **1**, tri-color light sources **71**, i.e., one or more light sources that provide illuminating radiations to the object **26** in a plurality of different colors, are coupled to a tri-color sequence generator **74**, which are suitably controlled by the processing unit **24** to provide the three colored illuminations via delivery optics **73** in a predetermined sequence. The colored illuminations are provided at a relative short time interval, typically in the range of about 0 to 100 milliseconds, in some cases being in the order of 50 milliseconds or 20 milliseconds, for example, with respect to the 3D scan, directly before or after the same. Suitable processing software **82** combines the three images to provide a 2D color image comprising an array of data points having location (X,Y) and color (C) information for each pixel of the 2D color image.

[**0146**] According to a first embodiment of the device **100**, the delivery optics **73** is integral with endoscope **46**, which is in the form of a probing member **90**, as illustrated in FIGS. **5**A, **5**B and **5**C. The probing member **90** is made of a light transmissive material, typically glass and is composed of an anterior segment **91** and a posterior segment **92**, tightly glued together in an optically transmissive manner at **93**. Slanted face **94** is covered by a totally reflective mirror layer **95**. Glass disk **96** defining a sensing surface **97** may be disposed at the bottom in a manner leaving an air gap **98**. The disk is fixed in position by a holding structure which is not shown. Three light rays are **99** from the main optics **42** are represented schematically. As can be seen, they bounce at the walls of the probing member at an angle in which the walls are totally reflective and finally bounce on mirror **95** and reflected from there out through the sensing face **97**. The light rays focus on focusing plane **101**, the position of which can be changed by the focusing optics (not shown in this figure). The probe member **90** comprises an interface **78** via which optical communication is established with the relay optics **44** and the remainder of the device **100**. The probe **90** further comprises a plurality of tri-color LED's **77**, for providing the colored illumination to the object **26**.

[0147] The LED's **77** typically comprise different LED's for providing blue radiation and green radiation when red illuminating radiation is used as the illumination source **31** for the main optics **41** when creating the 3D entity.

[0148] Alternatively, if a blue illuminating radiation is used as the illumination source **31**, the LED's **77** may comprise green and red LED's, and if a green illuminating radiation is used as the illumination source **31**, LED's **77** may comprise blue and red LED's.

[0149] The tri-color LED's **77** are each capable of providing an illumination radiation in one of three colors, typically red, green or blue, as controlled via the tri-color sequence generator. Alternatively, a plurality of LED's in three groups, each group providing illumination in one of the desired colors, may be provided. The LED's **77** are located at the periphery of the interface **78** such that the LED's do not interfere with the other optical operations of the device **100**. In particular such operations include the transmission of the illuminating radiation for the confocal focusing operations, and also the transmission of reflected light from the object **26** to the main optics **41** to provide the 3D entity or the 2D color entity. The LED's are mounted substantially orthogonally with respect to the interface **78**, and thus, as illustrated in FIG. **5**C, light from each of the LED's **77** is transmitted by internal reflection with respect to the walls of the probe **90**, to the user interface end **79** of the probe.

[0150] Preferably, the device **100** according to a variation of the first embodiment is further adapted for providing improved precision of the color data obtained therewith, in a similar manner to that described herein for the fourth embodiment, mutatis mutandis.

[0151] According to a second embodiment of the device **100**, the endoscope **46**, is also in the form of a probing member **90**, substantially as described with respect to the first embodiment, but with the difference that there are no LED's directly mounted thereon at the interface **78**, mutatis mutandis. In the second embodiment the delivery optics **73** is in the form of a disposable sleeve, shroud or sheath **190** that covers the outer surface the probing member **90**, as illustrated in FIG. **6**. The sheath **190** is made from a waveguiding material, such as an acrylic polymer for example, capable of transmitting an illuminating radiation from the upstream face **191** of the sheath **190** therethrough and to the downstream face **192** thereto. The upstream face **191** is in the form of a peripheral surface around the interface **78**. The downstream face **192** is formed as a peripheral projection surrounding a window **193** comprised in said sheath **190**. The window **193** is in registry with the user interface end **79** of the probe **90**. A plurality of tri-color LED's **177** for providing the colored illumination to the object **26** are mounted on the device **100** just upstream of the sheath **190**. The tri-color LED's **177** are each capable of providing an illumination radiation in one of three colors, typically red, green or blue, as controlled via the tri-color sequence generator **74**. Alternatively, a plurality of LED's in three groups, each group providing one colored illumination, may be provided. The LED's **177** are located outside of the main optics of the device **100**, and thus the LED's do not interfere with the other optical operations of the device **100** in particular including the transmission of the illuminating radiation for the confocal focusing operations, or in the transmission of reflected light from the object **26** to provide the 3D entity or the 2D color entity. The LED's are mounted substantially opposite to the upstream face **191**, and thus, as illustrated in FIG. **6**, light from each of the LED's **177** is transmitted by the waveguiding sheath **190** to downstream face **192** and thence to the object **26**. In this embodiment, the sheath **190** is particularly useful in maintaining hygienic conditions between one patient and the next, and avoids the need for sterilizing the probe **90**, since the sheath may be discarded after being used with one patient, and replaced with another sterilised sheath before conducting an intra-oral cavity survey with the next patient.

[0152] Preferably, the device **100** according to a variation of the second embodiment is further adapted for providing improved precision of the color data obtained therewith, in a similar manner to that described herein for the fourth embodiment, mutatis mutandis.

[0153] In either one of the first or second embodiments, or variations thereof, a red laser may be used as the illumination source **28** for the main optics when creating the 3D entity. As such, this illumination means may also be used to obtain the red monochromatic image for the creation of the 2D color image, by illuminating the object **26** and recording the image with the optical detector **60**. Accordingly, rather than tri-color LED's or LED's or three different colors, it is only necessary to provide LED's adapted to provide only the remaining two colors, green and blue. A similar situation arises if the illumination source for the main optics **41** is a green or blue laser, wherein illuminating radiations in only the remaining two colors need to be provided, mutatis mutandis.

[0154] In these embodiments, the positioning of the illumination sources at the upstream end of the probe **90** where there is ample room rather than at the patient interface end **79** where space is tight.

[0155] According to a third embodiment of the device **100**, the endoscope **46** is also in the form of a probing member **90**, substantially as described with respect to the second embodiment with the following differences, mutatis mutandis. As illustrated in FIG. **7**A, in the third embodiment the delivery optics **73** comprises a plurality of LED's **277** for providing the colored illumination to the object **26**. In this embodiment, a red laser is used as the illumination source for the main optics when creating the 3D entity. As such, this illumination means is also used to obtain the red monochromatic image for the creation of the 2D color image. Thus, the LED's **277** are each capable of providing an illumination radiation in either green or blue, as controlled via the tri-color sequence generator **74**. The LED's **277** are located on the outer side of slanted face **94**, and thus the LED's do not interfere with the other optical operations of the device **100** in particular including the transmission of the illuminating radiation for the confocal focusing operations, or in the transmission of reflected light from the object **26** to provide the 3D entity or the 2D color entity. The slanted face **94** comprises a dichroic coating **278** on the outer side thereof, which has relatively high reflectivity and low transmission properties with respect to red light, while having substantially high transmission characteristics for blue light and green light, as illustrated in FIG. **7**B. Thus, as illustrated in FIG. **7**A, light from each of the blue or green LED's **277** is transmitted, in turn, through the dichroic coating to interface **79** and thence to the object **26**, as controlled by the

generator **74**. At the same time the dichroic coating permits internal reflection of the red radiation from the main optics **41** to the interface **79** and object **26**, and thus allows the 3D scan to be completed, as well as allowing the red monochromatic image of the object **26** to be taken by the device **100**. Optionally, rather than employing blue and green LED's, tricolor LED's may be used, and properly synchronized to illuminate with either green or blue light as controlled by generator **74**. Alternatively, the illumination source for the main optics **41** may be a green or blue laser, in which case the LED's are each capable of providing illumination in the remaining two colors, and in such cases the dichroic coating is adapted for allowing transmission of these remaining two colors while providing substantially high reflection for the illuminating laser of the main optics, in a similar manner to that described above for the red laser, mutatis mutandis.

[**0156**] In a fourth embodiment of the device **100**, and referring to FIG. **8**, tri-color illumination is provided within the main focal optics **42**, in particular at the confocal system aperture stop, and facing the objective lens of the system. An advantage provided by this form of illumination is that the tri-color illumination illuminates the object **26** through the downstream objective lens **142** in nearly collimated light, and thus the object illumination is highly uniform. The tri-color light sources **377** may be mounted statically on the physical aperture stop at the aperture stop plane **150**, or alternatively they may be mounted on a retracting aperture stop, which also serves to stop down the system aperture in preview mode. In this embodiment, by placing the tri-color light sources **377** at the aperture stop plane, wherein the light beam from the illumination source **31** narrows to a minimum within the main optics **41**, the external dimensions of the device **100** may still remain relatively compact.

[**0157**] Referring to FIG. **9**, the tri-color light sources **377** may comprise, for example, a plurality of tri-color LED's **385** mounted onto a bracket **380**. The bracket **380** is typically annular, having a central aperture to allow illumination light from the illuminating unit **31** to pass therethrough and to the object **26**, and to allow light coming from the object **26** to pass therethrough and to the detection optics **60**, without being affected by the bracket **380**. At the same time, the bracket **380** positions the LED's in the required location upstream of objective lens **166**. The LED's are arranged in a spaced radial and circumferential manner as illustrated in FIG. **9** to provide the most uniform illumination of the object **26** possible with this arrangement. Typically, a red laser is used as the illumination source **31** for the main optics **41** when creating the 3D entity. As such, and as in other embodiments, this illumination means is also used to obtain the red monochromatic image for the creation of the 2D color image. Thus, the LED's **385** are each capable of providing an illumination radiation in either green or blue, as controlled via the tri-color sequence generator **74**. Alternatively, the illumination source for the main optics **41** may be a green or blue laser, in which case the LED's **385** are each capable of providing illumination in the remaining two colors, in a similar manner to that described above for the red laser, mutatis mutandis. Optionally, rather than employing blue and green LED's, tricolor LED's may be used, and properly synchronized to illuminate with either green or blue light as controlled by generator **74**. Further optionally, the LED's **385** may be used to provide, sequentially, all the required colored illuminations, typically red, green and blue. Alternatively, the LED's **385** each provide illumination in one of at least three colors. Thus, some of the LED's **385** provide a blue illumination, while other LED's **385** provide green illumination, while yet other LED's **385** provide red illumination.

[**0158**] Preferably, the device **100** according to a variation of the fourth embodiment is further adapted for providing improved precision of the color data obtained therewith. In this connection, the device **100** according to this variation of the fourth embodiment is adapted such that the tri-color light sources **377** each illuminate the object **26** with as wide a depth of field as possible, i.e., at a low numerical aperture. Thus, each set of light sources **377** of the same color, for example blue, illuminates a particular depth of the object **26** in the z-direction while substantially in focus. In contrast, the numerical aperture of the confocal system itself is relatively high to maximize accuracy of the depth measurements, and thus provides a relatively narrower depth of field.

[**0159**] Advantageously, the optical system downstream of the light sources **377**, in this embodiment the objective lens **166**, is chromatic, and in particular maximizes the chromatic dispersion therethrough. Alternatively or additionally, a chromatic dispersion element, for example an optically refractive block of suitable refractive index, may be provided along the optical path between the light sources **377** and the object **26**. Thus, each one of the different-colored light sources **377** illuminates a different portion of the object **26** along the z-direction. The light sources **377** providing the blue illumination illuminate in focus a portion of the object **26** closest to the device **100**, and the light sources **377** providing the red illumination illuminate in focus a portion of the object **26** furthest from the device **100**. At the same time, the light sources **377** providing the green illumination illuminate in focus a portion of the object **26** intermediate the blue and red portions, and a non-illuminated gap may exists between the red and green, and between the green and blue illuminated portions, the depth of these gaps depending on the dispersion characteristics of the downstream optics. Advantageously, the light sources **377** are also adapted for providing illumination in colors intermediate in wavelengths such as to illuminate the aforesaid gaps in focus. Thus, the LED's **385** may be adapted for providing both such additional colored illumination, or some of the LED's **385** may be adapted to provide colored illumination at a first intermediate wavelength, while another set of LED's **385** may be adapted to provide colored illumination at a second intermediate wavelength. For example, the first intermediate wavelength provides an illumination in aqua, and thus illuminates in focus at least a part of the gaps between the blue and green illuminated focused zones of the object **26**, while the second intermediate wavelength provides an illumination in amber, and thus illuminates in focus at least a part the gaps between the green and red illuminated focused zones. Of course, additional light sources may be used to provide further intermediate wavelengths and thus provide further depth cover illumination, in focus, of the object.

[**0160**] While the device **100** is used as a viewfinder, typically prior to taking a depth and color scan of the object **26**, the above arrangement using at least five different colored illuminations at a low numerical aperture, enables a much clearer and focused real-time color image of the object **26**: to be obtained. Thus when in operation in viewfinder mode (also known as "aiming mode", prior to the 3D scan

event, while the dental practitioner is in the process of aiming the scanner onto the target dental surface, for example) the device **100** according to this variation of the fourth embodiment repeatedly illuminates the object **26** in cycles, wherein in each cycle the object **26** is separately illuminated in each of the five colors blue, aqua, green, amber, red, in quick succession, and each time a monochromatic image is obtained by the monochromatic image sensor in **60**. Each set of five monochromatic images is then analysed to provide a composite color image, and this image is then displayed in substantially real time in the viewfinder display window in the control software, so that the succession of such composite images gives the appearance of a substantially real-time color video feed of the object **26**.

[**0161**] Each of the monochrome images in any particular set corresponds to a particular illumination color or wavelength, and thus the zone(s) of the object **26** within the depth of field corresponding to this illumination will be in focus, while the other parts of the object **26** will appear out of focus. Thus, each such image in the aforesaid set of images will contain a portion which has high precision focused image of a part of the object, for the particular illumination wavelength.

[**0162**] In forming a composite image for each set of images, the images are combined in such a way as to maximize the precision of the focused image and corresponding color thereof. Thus, for example, suitable algorithms may be applied to each of the five images of a set to distinguish between the focused and unfocused the areas thereof. Such algorithms may employ, for example, techniques which apply FFT techniques to areas of the images, and which search for high frequency portions which correspond to focused areas. In any case, such algorithms, as well as software and hardware to accomplish the same are well known in the art. Then, the focused areas of each of the five images are merged to provide a monochrome composite substantially focused image of the object. Next, the images obtained using the red, green and blue illuminations are combined and converted to a corresponding luminescence/chroma (Y/C) image, and techniques for doing so are well known in the art. Finally, the luminescence component of the luminescence/chroma (Y/C) image is replaced with the aforesaid corresponding composite focus image, and the resulting new luminescence/chroma image is then transmitted to the display in the viewfinder.

[**0163**] For each set of images, prior to combining the corresponding red, green and blue images, these are preferably first scaled to compensate for magnification effects of the different wavelengths. Thus, the green image, and more so the blue image, needs to be scaled up to match the red image.

[**0164**] When the user is ready to take a depth and color scan of the object **26**, having steered the device **100** into position with the aid of the viewfinder, the device **100** takes a depth scan in the z-direction as described herein, and either before or after the same, but in quick succession one with the other, takes a color scan in a similar manner to that described above for the viewfinder mode, mutatis mutandis. Subsequently, the color data and the depth data of the two scans can be combined to provide the full spatial and color data for the surface scanned.

[**0165**] Advantageously, one or more color scans may also be taken during the depth scan, and/or at the beginning and at the end of the depth scan. In one mode of operation, the depth scan is obtained by displacing the objective lends **166** along the z-direction in a continuous or stepped motion. Multiple color scans can then be obtained by associating the color sources **377** with the objective lens, so that these are also displaced along the z-direction. Accordingly, as the light sources **377** are moved in the z-direction towards the object **26** during the depth scan, at each different z-position in which a set of images is taken (concurrently with or alternately with the depth scan), each one of the colored illuminations—red, green, blue and intermediate wavelengths—illuminates a progressively deeper part of the object along the z-direction. Of course, in some cases it is possible that at the downstream end of the depth scan the green and red illuminations completely overshoot the object **26**, and the corresponding images may be discarded or otherwise manipulated to provide a composite color image at this station. Thus, a plurality of color images can be obtained, each based on a different z-position, so that each illumination wavelength is used to illuminate in focus a different part (depth) of the object **26**. Advantageously, suitable algorithms may be used to form a composite color image of the set of color images associated with a particular z-scan of the object **26** to provide even more precise and accurate color image, than can then be combined with the depth data.

[**0166**] Alternatively, and referring to FIG. **10**, the tri-color light sources **377** may be replaced with a rotating filter illumination system **400**. The system **400** comprises a while light source **410**, such as for example white phosphorus InGaN LED's, and the light therefrom is focused onto an optical fiber bundle **420** by means of condenser optics **430**. Between the condenser optics **430** and the fiber bundle **420** is provided a rotating tri-color filter **450**. As best seen in FIG. **10**A, the filter **450** is divided into three colored sections, comprising blue, green and red filters on adjacent sectors therein. The fiber bundle **420** is flared at the downstream end **470** to form the desired illumination pattern. Optionally, the downstream end **470** of the fibers may be mounted onto an annular bracket similar to bracket **380** illustrated in FIG. **9**, at the aperture stop plane of the confocal optics. A suitable motor **460**, typically a stepper motor for example, drives the rotating filter such as to sequentially present each colored filter to the light passing from the condenser optics **430** to the fiber bundle **420**, as synchronized with the sequence generator **74** (FIG. **1**) to enable the detection optics **60** to capture images of the object **26** when selectively illuminated with each of the three colors. Optionally, if a red, blue or green illuminating radiation is used as the illumination source **31** for the main optics **41** when creating the 3D entity, then the rotating filter **450** only requires to comprise the remaining two colors, as discussed above for similar situations regarding the LED's, mutatis mutandis.

[**0167**] Preferably, the device **100** according to this variation of the fourth embodiment may be further adapted for providing improved precision of the color data obtained therewith, in a similar manner to that described herein for another variation of fourth embodiment, mutatis mutandis. In particular, the filter **450** is divided into five (or more if desired) colored sections, comprising blue, aqua, green, amber and red filters on adjacent sectors therein.

[**0168**] A fifth embodiment of system **100** is substantially similar to the fourth embodiment as described herein, with

the following difference, mutatis mutandis. In the fifth embodiment, and referring to FIG. **11**, polarizers are provided at two locations in order to increase the image contrast. A first polarizing element **161** is located just downstream of the light sources **377** so as to polarize the light emitted from the light sources **377**. A second polarizing element **162** is located just upstream of the image sensor of the detection optics **60**, and is crossed with respect to the first polarizing element **161**. Further, a quarter waveplate **163** is provided just upstream of the object **26**, i.e. at the downstream end of the endoscope **46** (FIG. **4**A). The first polarizing element **161** is typically annular, having a central aperture to allow illumination light from the illuminating unit **31** to pass therethrough and to the object, and to allow light coming from the object **26** to pass therethrough and to the detection optics **60**, without being affected by the polarizing element **161**. However, light that is reflected from the object **26** returns to the main confocal optics **42** in a crossed polarization state due to the effect of the quarter waveplate **163**, and thus reaches the detection optics **60** at substantially full intensity. However, any light reflected from the objective lens **166** of the confocal optics **42** is reflected at the same polarization state, and is therefore filtered out by the crossed polarizing element **162**. This arrangement serves as an effective signal to ghost enhancement system.

[**0169**] Preferably, the device **100** according to a variation of the fifth embodiment is further adapted for providing improved precision of the color data obtained therewith, in a similar manner to that described herein for the fourth embodiment, mutatis mutandis.

[**0170**] A sixth embodiment of the system **100** is substantially as described for the fourth embodiment, with the following difference, mutatis mutandis. In the sixth embodiment, and referring to FIG. **12**, the tri-color light sources **377** are replaced with a rotating filter illumination system **500**. The system **500** comprises a while light source **510**, such as for example white phosphorus InGaN LED's, and the light therefrom is focused onto a mirror **520** by means of condenser optics **530**. Between the condenser optics **530** and the mirror **520** is provided a rotating tri-color filter **550**, which is similar to the filter **450** illustrated in FIG. **11**, and thus comprises three colored sections, comprising blue, green and red filters on adjacent sectors therein, and is actuated by motor **560**. The optical axis OA of the confocal optics **41** is orthogonal to the optical axis OA' of the light source **510** and condenser optics **530**. The mirror **520** is mounted between the aperture stop plane and the objective lens **166** of the confocal optics, and at an angle to the optical axis OA thereof and to the optical axis OA' of the light source **510** and condenser optics **530**. The mirror **520** is typically annular, having a central aperture aligned with optical axis OA to allow illumination light from the illuminating unit **31** to pass therethrough and to the object **26**, and to allow light coming from the object **26** to pass therethrough and to the detection optics **60**, without being affected by the mirror **520**. At the same time, the mirror **520** has sufficient reflecting surface to reflect light from the source **510** via objective lens **166** and to the object **26**. Optionally, if a red, blue or green illuminating radiation is used as the illumination source **31** for the main optics **41** when creating the 3D entity, then the rotating filter **550** only requires the remaining two colors, as discussed above for similar situations, mutatis mutandis.

[**0171**] Preferably, the device **100** according to a variation of the sixth embodiment is further adapted for providing improved precision of the color data obtained therewith, in a similar manner to that described herein for the fourth embodiment, mutatis mutandis.

[**0172**] According to a second technique for providing the aforesaid 2D color image, the object **26** is illuminated with a white light, and a color CCD is used for receiving the light reflected from the object **26**. Thus, a seventh embodiment of the system **100** comprises a white light illumination system **600**, illustrated in FIG. **13**. The system **600** comprises a while light source **610**, such as for example white phosphorus InGaN LED's, and the light therefrom is directed onto a flip mirror **620** via a polarizing beam splitter **650** by means of condenser optics **630**. The optical axis OA of the confocal optics **41** is orthogonal to the optical axis OA" of the light source **610** and condenser optics **630**. The mirror **620** is mounted between the aperture stop plane **155** and the objective lens **166** of the confocal optics, and at an angle to the optical axis OA thereof and to the optical axis OA" of the light source **610** and condenser optics **630**.

[**0173**] The mirror **620** is adapted to flip away from optical axis OA when the device **100** is being used for obtaining the 3D entity E. This allows illumination light from the illuminating unit **31** to pass therethrough and to the object **26**, and to allow light coming from the object **26** to pass therethrough and to the detection optics **60**, without being affected by the mirror **620**. When it is desired to take a 2D color image, the mirror **620** is flipped down to the position shown in FIG. **13**. Polarizing beam splitter **650** that polarizes white light from the source **610** and allows the same to pass therethrough and to mirror **620**, and thence to the object **26** via the confocal objective **166** and broadband quarter wave plate **163**. Light that is reflected from the object **26** returns to the mirror **620** in a crossed polarization state due to the effect of the quarter waveplate **163**, and thus reaches the color CCD **660** (and associated detection optics—not shown) at substantially full intensity. However, any light reflected from the objective lens **166** of the confocal optics **42** is reflected at the same polarization state, and is therefore filtered out by a crossed polarizing element **662** just upstream of the CCD **660**. This arrangement serves as an effective signal to ghost enhancement system.

[**0174**] Alternatively, the CCD of the detection optics **60** is a color CCD and is also used for the 2D scan. In such a case, flipping mirror **620** is replaced with a fixed mirror having a central aperture similar to mirror **520**, having a central aperture, as described for the sixth embodiment, mutatis mutandis.

[**0175**] In the seventh embodiment, the image capture device **80** and processing software **82** (FIG. **4***b*) automatically provide a 2D color image comprising an array of data points having location (X,Y) and color (C) information for each pixel of the image.

[**0176**] According to a third technique for providing the 2D color image, the object is illuminated with a white light, and the light reflected from the object **26** is passed sequentially through one of three different colored filters such as red, green ad blue. Each time a monochromatic image corresponding to each color is captured via CCD **68** and the image capture device **80** (see FIGS. **4**A, **4**B). Suitable processing software **82** combines the three images to pro-

vide a 2D color image comprising an array of data points having location (X,Y) and color (C) information for each pixel of the image.

[0177] According to a fourth technique for providing the color image, the main illumination source **31** of device **100** comprises suitable means for providing the three different colored illuminations. In one embodiment, the illumination source **31** comprises three different lasers, each one providing an illumination radiation at a different desired color, red green or blue. In another embodiment, a suitable white light illumination means is provided, coupled to a suitable rotating tri-color filter, similar to the filters described above, mutatis mutandis. In each case, suitable control means are provided, adapted to illuminate the object **26** with each colored radiation in turn, and the 2D colored image is obtained in a similar fashion to that described above, mutatis mutandis. The object is also illuminated with one of the colored illuminations in order to provide the 3D surface topology data.

[0178] In each of the embodiments described herein, the illumination radiation that is used for obtaining the 2D color image is injected into the optical axis OA of the confocal optics **42** without affecting the operation thereof or degrading the 3D image capture.

[0179] The endoscope **46**, the illumination unit **31**, the main optics **41**, color illumination **71** and tri-color sequence generator are preferably included together in a unitary device, typically a hand-held device. The device preferably includes also the detector optics **60**, though the latter may be connected to the remainder of the device via a suitable optical link such as a fibre optics cable.

[0180] For all embodiments, the data representative of the surface topology and color, i.e., entity I, may be transmitted through an appropriate data port, e.g. a modem **88** (FIG. **4**B), through any communication network, e.g. telephone line **90**, to a recipient (not shown) e.g. to an off-site CAD/CAM apparatus (not shown).

[0181] By capturing, in this manner, an image from two or more angular locations around the structure, e.g. in the case of a teeth segment from the buccal direction, from the lingual direction and optionally from above the teeth, an accurate color three-dimensional representation of the teeth segment may be reconstructed. This may allow a virtual reconstruction of the three-dimensional structure in a computerized environment or a physical reconstruction in a CAD/CAM apparatus.

[0182] While the present invention has been described in the context of a particular embodiment of an optical scanner that uses confocal focusing techniques for obtaining the 3D entity, the device may comprise any other confocal focusing arrangement, for example as described in WO 00/08415. In fact, any suitable means for providing 3D scanning can be used so long as the 3D scan and the color 2D scan correspond substantially to the same object or portion thereof being scanned, and the same frames of references are maintained. Typically the scans are executed in relatively quick succession, and by the same or different image capturing means such as CCD's that are arranged such that the color 2D image substantially corresponds to the 3D entity. This enables color values at particular x, y coordinates of the 2D color image to be matched to the same x, y coordinates of the 3D image which also have a z coordinate.

[0183] The embodiments illustrated herein are particularly useful for determining the three-dimensional structure of a teeth segment, particularly a teeth segment where at least one tooth or portion of tooth is missing for the purpose of generating data of such a segment for subsequent use in design or manufacture of a prosthesis of the missing at least one tooth or portion, e.g. a crown, or a bridge, or a dental restoration or a filing. It should however be noted, that the invention is not limited to this embodiment, and applies, mutatis mutandis, also to a variety of other applications of imaging of three-dimensional structure of objects, e.g. for the recordal or archeological objects, for imaging of a three-dimensional structure of any of a variety of biological tissues, etc.

[0184] While there has been shown and disclosed exemplary embodiments in accordance with the invention, it will be appreciated that many changes may be made therein without departing from the spirit of the invention.

[0185] In the method claims that follow, alphabetic characters and Roman numerals used to designate claim steps are provided for convenience only and do not imply any particular order of performing the steps.

[0186] Finally, it should be noted that the word "comprising" as used throughout the appended claims is to be interpreted to mean "including but not limited to".

1. Device for determining the surface topology and associated color of at least a portion of a three dimensional structure, comprising:

(a) scanning means adapted for providing depth data of said portion corresponding to a two-dimensional reference array substantially orthogonal to a depth direction;

(b) imaging means adapted for providing two-dimensional color image data of said portion associated with said reference array;

wherein the device is adapted for maintaining a spatial disposition with respect to said portion that is substantially fixed during operation of said scanning means and said imaging means.

2. Device according to claim 1, wherein said device is adapted for providing a time interval between acquisition of said depth data and acquisition of said color image data such that substantially no significant relative movement between said device and said portion occurs.

3. Device according to claim 2, wherein said time interval is between about 0 seconds to about 100 milliseconds, preferably between 0 and 50 milliseconds, and more preferably between 0 and 20 milliseconds.

4. Device according to claim 1, further comprising processing means for associating said color data with said depth data for corresponding data points of said reference array.

5. Device according to claim 1, wherein said operation of said scanning means is based on confocal imaging techniques.

6. Device according to claim 5, wherein said scanning means comprises:

a probing member with a sensing face;

first illumination means for providing a first array of incident light beams transmitted towards the structure along an optical path through said probing unit to generate illuminated spots on said portion along said depth direction, wherein said first array is defined within said reference array;

a light focusing optics defining one or more focal planes forward said probing face at a position changeable by said optics, each light beam having its focus on one of said one or more focal plane;

a translation mechanism for displacing said focal plane relative to the structure along an axis defined by the propagation of the incident light beams;

a first detector having an array of sensing elements for measuring intensity of each of a plurality of light beams returning from said spots propagating through an optical path opposite to that of the incident light beams;

a processor coupled to said detector for determining for each light beam a spot-specific position, being the position of the respective focal plane of said one or more focal planes yielding maximum measured intensity of the returned light beam, and based on the determined spot-specific positions, generating data representative of the topology of said portion.

7. Device according to claim 6, wherein said first array is arranged to provide depth data at a plurality of predetermined spatial coordinates substantially corresponding to the spatial disposition of said incident light beams.

8. Device according to claim 7, wherein operation of said imaging means is based on:

illuminating said portion with three differently-colored illumination radiations, the said illuminations being combinable to provide white light,

capturing a monochromatic image of said portion corresponding to each said illuminating radiation, and

combining the monochromatic images to create a full color image,

wherein each said illuminating radiation is provided in the form of a second array of incident light beams transmitted towards the portion along an optical path through said probing unit to generate illuminated spots on said portion along said depth direction, wherein said second array is defined within said reference frame.

9. Device according to claim 8, wherein said second array is arranged to provide color data at a plurality of spatial coordinates substantially corresponding to the spatial coordinates of said first array.

10. Device according to claim 9, comprising color illumination means adapted for providing three second illuminating radiations, each of a different color.

11. Device according to claim 10, wherein said color illumination means comprises any one of the following:

second illumination means for providing said three second illuminating radiations, each of a different color;

second illumination means for providing two said second illuminating radiations, and wherein said first illumination means provides another said second illuminating radiation each said second illuminating radiation being of a different color.

12. Device according to claim 11, wherein said second illumination means comprise radiation transmission elements that are configured to be located out of the path of said light beams or said returned light beam at least within said light focusing optics.

13. Device according to claim 12, wherein said probing member is made from a light transmissive material having an upstream optical interface with said light focusing optics and a reflective face for reflecting light between said optical interface and said sensing face.

14. Device according to claim 13, wherein said second illumination means are optically coupled to said optical interface for selectively transmitting illuminating radiations in at least two colors to said portion via said sensing face.

15. Device according to claim 13, wherein said color illumination means comprises second illumination means for providing two said second illuminating radiations, and wherein said first illumination means provides another said second illuminating radiation each said second illuminating radiation being of a different color.

16. Device according to claim 15, wherein said probing member comprises a removable sheath having an inner surface substantially complementary to an outer surface of said probing member, and having a window in registry with said sensing face, wherein said sheath is made from a waveguiding material and is adapted to transmit said light from said second illuminating means from an upstream face thereof to a downstream face associated with said window.

17. Device according to claim 16, wherein said second illumination means are optically coupled to said upstream face for selectively transmitting said second illuminating radiations in at least two colors to said portion via said downstream face.

18. Device according to claim 13, wherein said reflective face comprises a dichroic coating, having relatively high reflectivity and low optical transmission properties for a said second illuminating radiation provided by said first illumination means, and relatively low reflectivity and high optical transmission properties for the two said second illuminating radiations provided by said second illumination means.

19. Device according to claim 12, wherein said second illumination means are adapted for providing second illuminating radiations within said light focusing optics.

20. Device according to claim 19, wherein said second illumination means are adapted for providing second illuminating radiations at an aperture stop plane of said light focusing optics.

21. Device according to claim 19, comprising a mirror inclined to the optical axis of said light focusing optics and having an aperture configured to allow said light beams and said returning light beams to pass therethrough without being optically affected by said mirror, and wherein said second illumination means comprises at least one white illumination source optically coupled with suitable color filters, said filters selectively providing illumination radiation in each color in cooperation with said white illumination source, wherein said mirror is coupled to said white illumination source to direct radiation therefrom along said optical axis.

22. Device according to claim 19, further comprising:

a first polarizing element located just downstream of said illumination means so as to polarize the light emitted therefrom;

a second polarizing element located just upstream of said first detector, wherein said second polarizing element is crossed with respect to the first polarizing element; and

a quarter waveplate at the downstream end of said device.

23. Device according to claim 19, wherein said illumination means are adapted for selective movement in the depth direction.

24. Device according to claim 12, wherein said second illumination means are in the form of any one of the following:—

suitable LED's, comprising at least one LED for providing illumination radiation in each color;

suitable LED's, comprising at least one white illumination source optically coupled with suitable color filters, said filters selectively providing illumination radiation in each color in cooperation with said white illumination source.

25. Device according to claim 8, wherein said first detector is adapted for selectively measuring intensity of each said second illuminating radiation after reflection from said portion.

26. Device according to claim 7, wherein operation of said imaging means is based on any one of the following:—

illuminating said portion with substantially white illumination radiation, and capturing a color image of said portion, wherein said white illuminating radiation is provided in the form of a second array of incident light beams transmitted towards the portion along an optical path through said probing unit to generate illuminated spots on said portion along said depth direction, wherein said second array is defined within said reference frame;

illuminating said portion with substantially white illumination radiation, selectively passing radiation reflected from said portion through a number of color filters, capturing a monochromatic image of said portion corresponding to each said filter, and combining the monochromatic images to create a full color image, wherein said illuminating radiation is provided in the form of a second array of incident light beams transmitted towards the portion along an optical path through said probing unit to generate illuminated spots on said portion along said depth direction, wherein said second array is defined within said reference frame;

illuminating said portion with three differently-colored illumination radiations, capturing a monochromatic image of said portion corresponding to each said illuminating radiation, and combining the monochromatic images to create a full color image, wherein each said illuminating radiation is provided in the form of a second array of incident light beams transmitted towards the portion along an optical path through said probing unit to generate illuminated spots on said portion along said depth direction, wherein said second array is defined within said reference frame, and wherein said illuminating radiations are provided by said first illumination source.

27. Device according to claim 26, wherein said second array is arranged to provide color data at a plurality of spatial coordinates substantially corresponding to the spatial coordinates of said first array.

28. Device according to claim 27, wherein said imaging means comprises:—white illumination radiation means;

second detector having an array of sensing elements for measuring intensity of said white illuminating radiation after reflection from said portion.

29. Device according to claim 10, further comprising a tri-color sequence generator for controlling the illumination of said portion with said second illuminating radiations.

30. Device according to claim 29, further comprising at least one of

A tri-color sequence generator for controlling the illumination of said portion with said second illuminating radiations;

processor coupled to said detector for conformally mapping color data provided by said imaging means to said depth data provided by said scanning means for each said spatial coordinates of said first array to provide a color three-dimensional numerical entity comprising a plurality of data points, each data point comprising three-dimensional surface coordinate data and color data associated therewith;

a unit for generating manufacturing data for transmission to CAD/CAM device based on said entity

a communication port of a communication medium.

31. Device according to claim 30, adapted for determining color and surface topology of a teeth portion.

32. Method for determining the surface topology and associated color of at least a portion of a three dimensional structure, comprising:

(a) providing depth data of said portion corresponding to a two-dimensional reference array substantially orthogonal to a depth direction;

(b) providing two-dimensional image data of said portion associated with said reference array;

(c) ensuring that a spatial disposition with respect to said portion during steps (a) and (b) is substantially fixed;

(d) conformally mapping said color data to said depth data for said reference array.

33. Method according to claim 32, wherein in step (c), a minimum time interval is allowed between acquisition of said depth data and acquisition of said image data.

34. Method according to claim 33, wherein said time interval is between about 0 seconds to about 100 milliseconds, preferably between 0 and 50 milliseconds, and more preferably between 0 and 20 milliseconds.

35. Method according to claim 32, wherein said depth data is provided using confocal imaging techniques.

36. Method according to claim 32, comprising:

(i) providing a first array of incident light beams defined within said reference array propagating in an optical path leading through a focusing optics and through a probing face; the focusing optics defining one or more focal planes forward said probing face in a position changeable by said optics, each light beam having its focus on one of said one or more focal plane; the beams generating a plurality of illuminated spots on the structure;

(ii) detecting intensity of returned light beams propagating from each of these spots along an optical path opposite to that of the incident light;

(iii) repeating steps (i) and (ii) a plurality of times, each time changing position of the focal plane relative to the structure;

(iv) for each of the illuminated spots, determining a spot-specific position, being the position of the respec-

tive focal plane yielding a maximum measured intensity of a respective returned light beam; and

(v) generating data representative of the topology of said portion.

37. Method according to claim 36, wherein step (ii) is based on any one of the following:—

(A) illuminating said portion with three differently-colored illumination radiations, said illumination radiations being combinable to produce white radiation, capturing a monochromatic image of said portion corresponding to each said illuminating radiation, and combining the monochromatic images to create a full color image, wherein each said illuminating radiation is provided in the form of a second array of incident light beams transmitted towards the portion along an optical path through said probing unit to generate illuminated spots on said portion along said depth direction, wherein said second array is defined within said reference frame;

(B) illuminating said portion with substantially white illumination radiation, selectively passing radiation reflected from said portion through a number of color filters, capturing a monochromatic image of said portion corresponding to each said filter, and combining the monochromatic images to create a full color image, wherein said illuminating radiation is provided in the form of a second array of incident light beams transmitted towards the portion along an optical path through said probing unit to generate illuminated spots on said portion along said depth direction, wherein said second array is defined within said reference frame;

(C) illuminating said portion with three differently-colored illumination radiations, capturing a monochromatic image of said portion corresponding to each said illuminating radiation, and combining the monochromatic images to create a full color image, wherein each said illuminating radiation is provided in the form of a second array of incident light beams transmitted towards the portion along an optical path through said probing unit to generate illuminated spots on said portion along said depth direction, wherein said second array is defined within said reference frame, and wherein said illuminating radiations are provided by said first illumination source.

38. Method according to claim 37, wherein said second array is arranged to provide color data at a plurality of spatial coordinates substantially corresponding to the spatial coordinates of said first array.

39. Method according to claim 32, further comprising at least one of the following steps:—

(A1) using the data representative of said topology for constructing an object to be fitted within said structure;

(B1) converting the data representative of said topology into a form transmissible through a communication medium to recipient.

40. Method according to claim 39, wherein in step (A1) said structure is a teeth segment with at least one missing tooth or a portion of a tooth and said object is said at least one missing tooth or the portion of the tooth.

41. Method according to claim 32, comprising repeating steps (i) to (v) for two different surfaces of said structure to provide surface topologies thereof; and

combining the surface topologies to obtain color and topological data representative of said structure.

42. Method according to claim 41, for reconstruction of topology of a teeth portion, comprising:

determining surface topologies of at least a buccal surface and a lingual surface of the teeth portion;

combining the surface topologies to obtain data representative of a three-dimensional structure of said teeth portion.

* * * * *