UNITED STATES PATENT AND TRADEMARK OFFICE

BEFORE THE PATENT TRIAL AND APPEAL BOARD

DENTAL IMAGING TECHNOLOGIES CORPORATION

Petitioner

v.

3SHAPE A/S

Patent Owner

U.S. Patent No. 11,368,667 to Fisker *et al.*
Issue Date: June 21, 2022
Title: INTRAORAL SCANNING APPARATUS

Corrected Petition for *Inter Partes* Review of U.S. Patent No. 11,368,667 under 35 U.S.C. §§ 311-319 and 37 C.F.R. § 42.100 *et seq.*

TABLE OF CONTENTS

I. INTRODUCTION 1

II. GROUNDS FOR STANDING 1

III. STATEMENT OF PRECISE RELIEF REQUESTED 1

IV. OVERVIEW OF THE '667 PATENT AND FILE HISTORY 3

A. The '667 Patent 3

B. Prosecution History of the '667 Patent 5

V. OVERVIEW OF PRIOR ART 6

A. Babayoff 6

B. Zhang 8

C. Knighton 10

D. Serra 12

E. Gandyra 13

VI. LEVEL OF ORDINARY SKILL IN THE ART 14

VII. CLAIM CONSTRUCTION 14

VIII. DETAILED EXPLANATION OF GROUNDS 15

A. Ground 1: Claims 1-8, 13-16, 18-22, 26, and 28-29 Are Obvious Over Babayoff and Zhang and Knighton 15

1. A POSA Would Have Been Motivated to Combine Babayoff and Zhang and Knighton 15

2. Claim 1 19

3. Claim 2 49

4. Claim 3 49

5. Claim 4 50

6. Claim 5 51

7. Claim 6 52

8. Claim 7 54

9. Claim 8 57

10. Claim 13 58

11. Claim 14 59

12. Claim 15 62

13. Claim 16 62

14. Claim 18 63

15. Claim 19 63

16. Claim 20 63

17. Claim 21 64

18. Claim 22 64

19. Claim 26 64

20. Claim 28 67

21. Claim 29 67

B. Ground 2: Claims 12, 17, and 27 Are Obvious Over Babayoff and Zhang and Knighton and Serra 68

1. Claim 12 68

2. Claim 17 69

3. Claim 27 70

IX. MANDATORY NOTICES PURSUANT TO 37 C.F.R. § 42.8 70

A. Real Party-In-Interest (37 C.F.R. § 42.8(b)(1)) 70

B. Related Matters (37 C.F.R. § 42.8(b)(2)).....70

C. Counsel and Service Information
(37 C.F.R. § 42.8(b)(3), 42.8(b)(4)).....71

D. Payment of Fees 72

X. DISCRETIONARY ANALYSIS.....72

XI. CONCLUSION 73

TABLE OF EXHIBITS

Exhibit No.	Description
1001	U.S. Patent No. 11,368,667 ("the '667 patent")
1002	Declaration of Dr. Mohit Gupta ("Gupta Decl.")
1003	*Curriculum Vitae* of Dr. Mohit Gupta
1004	Prosecution History of U.S. Patent No. 11,368,667
1005	U.S. Patent App. Pub. No. 2008/0024768 to Noam Babayoff ("Babayoff")
1006	L. Zhang *et al.*, "Projection Defocus Analysis for Scene Capture and Image Display," ACM SIGGRAPH 2006, July 2006, pp. 907-915 ("Zhang")
1007	U.S. Patent App. Pub. No. 2005/0237581 to Knighton *et al.* ("Knighton")
1008	U.S. Patent App. Pub. No. 2006/0020204 to Serra *et al.* ("Serra")
1009	U.S. Patent App. Pub. No. 2009/0087050 to Michael Gandyra ("Gandyra")
1010	Declaration of Dr. James L. Mullins ("Mullins Decl.")

LIST OF CHALLENGED CLAIMS

Claim	Limitation
1[pre]	A handheld intraoral scanner for determining the 3D geometry and color of at least a part of the surface of an object in an oral cavity, the intraoral scanner comprising:
1[a]	a tip configured to be inserted into the oral cavity;
1[b]	at least one camera accommodating an array of sensor elements;
1[c]	a pattern generator configured to generate, using a light source, a probe light with a plurality of configurations in the form of a time-varying illumination pattern;
1[d]	an optical system configured to transmit the probe light, via the tip, towards the object along an optical path thereby illuminating at least a part of the object with the time-varying illumination pattern, and to transmit at least a part of the light returned from the object to the at least one camera to form a plurality of 2D images, wherein the 3D geometry is determined based on the plurality of 2D images and the time-varying illumination pattern;
1[e]	one or more motion sensors located on the intraoral scanner to measure three-dimensional motion of the intraoral scanner, wherein the intraoral scanner is wireless; and
1[f]	a hardware processor, located within the wireless intraoral scanner, configured to:
1[f][1]	selectively switch a color of the probe light to illuminate the object with different colors at different times; and
1[f][2]	record images of the object with the different colors by recording different images by the at least one camera at the different times.
2	The handheld intraoral scanner according to claim 1, wherein the light source further comprises at least three monochromatic light sources configured to provide the different colors.

Claim	Limitation
3	The handheld intraoral scanner according to claim 2, wherein for the selectively switch the color of the probe light, the hardware processor is further configured to selectively switch the color of the probe light by switching on and off the at least three monochromatic light sources.
4	The handheld intraoral scanner according to claim 1, wherein the optical system is substantially achromatic.
5	The handheld intraoral scanner according to claim 1, wherein the optical system is configured to direct the probe light towards the object in a direction substantially parallel with the longitudinal axis of the tip, and wherein the tip further comprises a single reflective mirror that is configured to reflect the probe light towards the object.
6	The handheld intraoral scanner according to claim 1, wherein the hardware processor is further configured to: process raw 3D data into data for the 3D geometry, wherein the raw 3D data is based on the plurality of 2D images; and transmit, via a wireless connection, the processed data for the 3D geometry.
7	The handheld intraoral scanner according to claim 1, wherein the hardware processor is further configured to: process raw 3D data into data for the 3D geometry, wherein the raw 3D data is based on the plurality of 2D images; and transmit, via a wireless connection, the data for the 3D geometry at a reduced data rate in comparison with transmission of the raw 3D data.
8	The handheld intraoral scanner according to claim 6, wherein the hardware processor is further configured to process the raw 3D data into data for the 3D geometry in real time.
12	The handheld intraoral scanner according to claim 1, wherein the

Claim	Limitation
	hardware processor is further configured to: output data from the one or more motion sensors for remotely controlling an image displayed on a display device based on acquired scan data.
13	The handheld intraoral scanner according to claim 1, wherein the hardware processor is further configured to: output data from the one or more motion sensors for stitching and/or registering partial scans to one another.
14[pre]	A handheld intraoral scanner for determining the 3D geometry and color of at least a part of the surface of an object in an oral cavity, the intraoral scanner comprising:
14[a]	a tip configured to be inserted into the oral cavity;
14[b]	at least one camera accommodating an array of sensor elements;
14[c]	a pattern generator configured to generate, using a light source, a probe light with a plurality of configurations in the form of a time-varying illumination pattern;
14[d]	an optical system configured to transmit the probe light, via the tip, towards the object along an optical path thereby illuminating at least a part of the object with the time-varying illumination pattern, and to transmit at least a part of the light returned from the object to the at least one camera to form a plurality of 2D images, wherein the 3D geometry is determined based on the plurality of 2D images and the time-varying illumination pattern, wherein the intraoral scanner is wireless; and
14[e]	a hardware processor, located within the wireless intraoral scanner, configured to:
14[e][1]	selectively switch a color of the probe light to illuminate the object with different colors at different times;
14[e][2]	record images of the object with the different colors by recording

Claim	Limitation
	different images by the at least one camera at the different times;
14[e][3]	process raw 3D data into data for the 3D geometry, wherein the raw 3D data is based on the plurality of 2D images; and
14[e][4]	transmit, via a wireless connection, the data for the 3D geometry at a reduced data rate in comparison with transmission of the raw 3D data.
15	The handheld intraoral scanner of claim 14, wherein the hardware processor is further configured to process the raw 3D data into data for the 3D geometry in real time.
16	The handheld intraoral scanner of claim 14, further comprising: one or more motion sensors located on the intraoral scanner to measure three-dimensional motion of the intraoral scanner.
17	The handheld intraoral scanner according to claim 16 wherein the hardware processor is further configured to: output data from the one or more motion sensors for remotely controlling an image displayed on a display device based on acquired scan data.
18	The handheld intraoral scanner according to claim 16, wherein the hardware processor is further configured to: output data from the one or more motion sensors for stitching and/or registering partial scans to one another.
19	The handheld intraoral scanner according to claim 14, wherein the light source further comprises at least three monochromatic light sources configured to provide the different colors.
20	The handheld intraoral scanner according to claim 14, wherein the hardware processor is further configured to selectively switch the color of the probe light by switching on and off the at least three monochromatic light sources.
21	The handheld intraoral scanner according to claim 14, wherein

Claim	Limitation
	the optical system is substantially achromatic.
22	The handheld intraoral scanner according to claim 14, wherein the optical system is further configured to direct the probe light towards the object in a direction substantially parallel with the longitudinal axis of the tip, and wherein the tip further comprises a single reflective mirror that is configured to reflect the probe light towards the object.
26[pre]	A handheld intraoral scanner for determining the 3D geometry and color of at least a part of the surface of an object in an oral cavity, the intraoral scanner comprising:
26[a]	a tip configured to be inserted into the oral cavity;
26[b]	at least one camera accommodating an array of sensor elements;
26[c]	a pattern generator configured to generate, using a light source, a probe light with a plurality of configurations in the form of a time-varying illumination pattern;
26[d]	an optical system configured to transmit the probe light, via the tip, towards the object along an optical path thereby illuminating at least a part of the object with the time-varying illumination pattern, and to transmit at least a part of the light returned from the object to the at least one camera to form a plurality of 2D images, wherein the 3D geometry is determined based on the plurality of 2D images and the time-varying illumination pattern;
26[e]	one or more motion sensors located on the intraoral scanner to measure three-dimensional motion of the intraoral scanner; and
26[f]	a hardware processor configured to:
26[f][1]	selectively switch a color of the probe light to illuminate the object with different colors at different times; and
26[f][2]	record images of the object with different colors by recording different images by the at least one camera at the different times.

Claim	Limitation
27	The handheld intraoral scanner according to claim 26, wherein the hardware processor is further configured to: output data from the one or more motion sensors for remotely controlling an image displayed on a display device based on acquired scan data.
28	The handheld intraoral scanner according to claim 26, wherein the hardware processor is further configured to: output data from the one or more motion sensors for stitching and/or registering partial scans to one another.
29	The handheld intraoral scanner according to claim 26, wherein the intraoral scanner is wireless and the hardware processor is further configured to: process raw 3D data into data for the 3D geometry, wherein the raw 3D data is based on the plurality of 2D images; and transmit, via a wireless connection, the data for the 3D geometry at a reduced data rate in comparison with transmission of the raw 3D data.

I. INTRODUCTION

Petitioner Dental Imaging Technologies Corporation ("Petitioner" or "DITC"), in accordance with 35 U.S.C. §§ 311-319 and 37 C.F.R. § 42.100 *et seq.*, respectfully requests *inter partes* review of Claims 1-8, 12-22, and 26-29 (the "Challenged Claims") of U.S. Patent No. 11,368,667 ("the '667 patent") (Ex. 1001), which, according to USPTO records, is assigned to 3Shape A/S ("Patent Owner").

II. GROUNDS FOR STANDING

Pursuant to 37 C.F.R. § 42.104(a), Petitioner certifies that the '667 patent is available for *inter partes* review and that Petitioner is not barred or estopped from requesting *inter partes* review of any claim of the '667 patent on the grounds identified herein. This Petition is filed in accordance with 37 C.F.R. § 42.106(a) along with a Power of Attorney and an Exhibit List pursuant to 37 C.F.R. § 42.10(b) and § 42.63(e).

III. STATEMENT OF PRECISE RELIEF REQUESTED

Petitioner respectfully requests that claims 1-8, 12-22, and 26-29 of the '667 patent be canceled based on the following grounds:

Ground 1: Claims 1-8, 13-16, 18-22, 26, and 28-29 of the '667 patent are unpatentable under pre-AIA 35 U.S.C. § 103 as obvious based on U.S. Patent App. Pub. No. 2008/0024768 to Babayoff ("Babayoff") (Ex. 1005) in view of L. Zhang

et al., "Projection Defocus Analysis for Scene Capture and Image Display," ACM SIGGRAPH 2006, July 2006, pp. 907-915 ("Zhang") (Ex. 1006) and U.S. Patent App. Pub. No. 2005/0237581 to Knighton *et al.* ("Knighton") (Ex. 1007).

Ground 2: Claims 12, 17, and 27 of the '667 patent are unpatentable under pre-AIA 35 U.S.C. § 103 as obvious based on Babayoff in view of Zhang and Knighton and U.S. Patent App. Pub. No. 2006/0020204 to Serra *et al.* ("Serra") (Ex. 1008).

The '667 patent was filed on November 23, 2021, and claims priority to U.S. Provisional Patent Application No. 61/187,744, filed on June 17, 2009. For purposes of this IPR, June 17, 2009 is assumed to be the "effective date," although Petitioner reserves the right to challenge that date in other proceedings.

Babayoff published on January 31, 2008. Ex. 1005, Cover. Zhang published in July 2006. Ex. 1006, p. 907; Ex. 1010, Declaration of Dr. James L. Mullins ("Mullins Decl."), ¶¶35-53. Dr. Mullins states that Zhang (Ex. 1006) is an ***authentic*** document and would have been ***publicly accessible*** through the Library of Congress no later than August 25, 2006. Ex. 1010, ¶53. Knighton published on October 27, 2005. Ex. 1007, Cover. Serra published on January 26, 2006. Ex. 1008, Cover. Therefore, Babayoff, Zhang, Knighton, and Serra are prior art under pre-AIA 35 U.S.C. § 102(b).

Zhang was not considered by the Patent Office during prosecution. Ex.

1004. While Babayoff, Knighton, and Serra were considered by the Patent Office during prosecution, they were not considered in combination with Zhang. Ex. 1001.

As detailed in the Grounds below, this Petition presents "a reasonable likelihood that the petitioner would prevail with respect to at least 1 of the claims challenged in the petition." 35 U.S.C. § 314(a). Therefore, the threshold requirement is met for *inter partes* review.

IV. OVERVIEW OF THE '667 PATENT AND FILE HISTORY

A. The '667 Patent

The '667 patent relates to a scanner for intraoral scanning of objects such as teeth. Ex. 1001, Abstract, 1:26-32. The scanner obtains the 3D geometry of at least part of the surface of the object and also determines the color of at least part of the surface of the object. *Id*., 2:46-48, 33:50-34:18. An example of the device for scanning for surface shape and color is shown in FIG. 8:

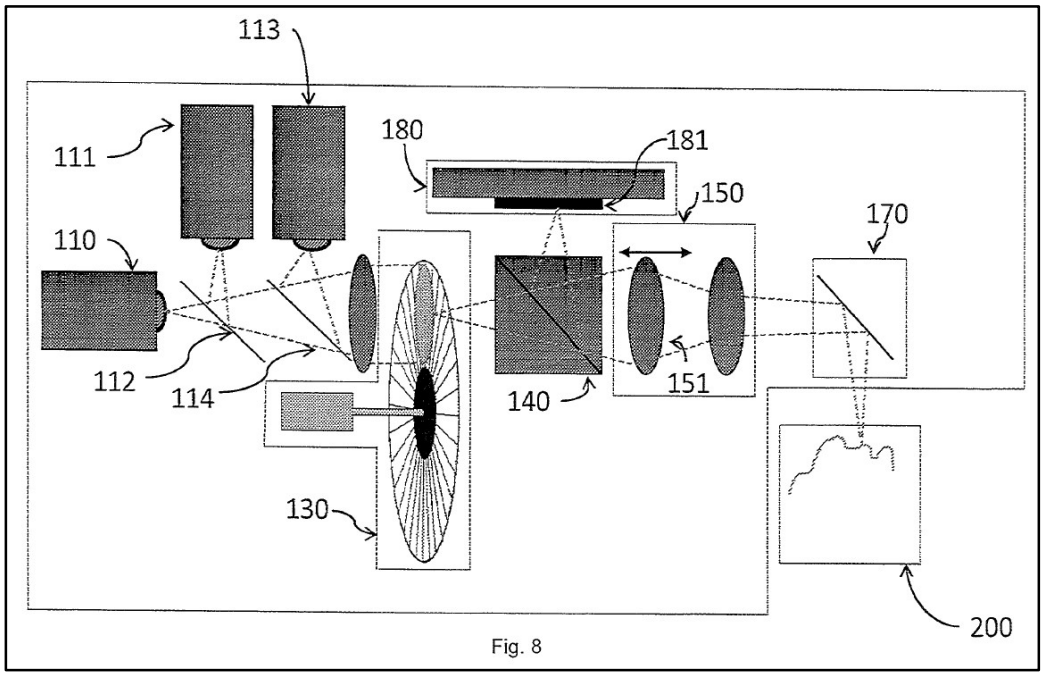

Id., FIG. 8.

The scanner includes a pattern generator to create a pattern of light, such as a line pattern or checkerboard pattern, on the object being scanned. *Id*., 8:34-59, 28:4-13. The pattern is made to be time-varying by moving the pattern across the object being scanned. *Id*., 3:10-17, 4:64-67, 8:40-59, 10:53-65. The scanner further varies the position of a focal plane for the scanner and obtains images with the time-varying pattern on the object at the different focal plane positions. *Id*., 3:28-43, 6:65-7:53, 11:64-12:4. The scanner then uses images from the focal plane positions to determine, for each pixel, the focal plane for which the pixel is most in-focus and uses that information to determine the 3D surface information. *Id*., 3:62-4:11.

The ’667 patent states that a time varying pattern is: a pattern that varies in

time (*id*., 4:64-67); and can be created by moving a pattern across the object being scanned (*id*., 3:10-17, 8:56-60, 10:53-55). The ’667 patent contrasts a time varying pattern with a static pattern by indicating that a time varying pattern can be generated by rotating and/or translating a pattern element to move the pattern across the object while a pattern element generating a static pattern does not need to be moved during a scan. *Id*., 8:56-60. The ’667 patent also states that a varying illumination pattern may be generated by an LCD or DLP based projector. *Id*., 13:37-38.

The scanner further includes three light sources that emit red, green, and blue light. *Id*., 33:50-52. In the preferred embodiment, one light source is switched on at a time, and an image is taken of the object for each of the light sources individually. *Id*., 33:62-65. The color of the surface of the object is then determined based on the amplitude signal for each color in the captured images. *Id*., 34:1-4.

The scanner head may be wireless. *Id*., 9:19-24. The ’667 patent also mentions that motion sensors can be used to detect motion. *Id*., 24:11-48.

B. Prosecution History of the ’667 Patent

The issued claims of the ’667 patent were added by preliminary amendment and were amended by supplemental preliminary amendment prior to examination, and the claims went directly to allowance. Ex. 1004.

V. OVERVIEW OF PRIOR ART

A. Babayoff

Babayoff discloses a scanner for the intraoral scanning of objects such as teeth. Ex. 1005, Abstract, [0001], [0009], [0129]. The scanner obtains the 3D geometry of at least part of the surface of the object and also determines the color of at least part of the surface of the object. *Id.*, [0010]-[0015], [0021]-[0048], [0063]-[0066], [0129]-[0131], [0134]-[0150]. An example embodiment of the device for scanning for surface shape and color is shown in FIG. 1:

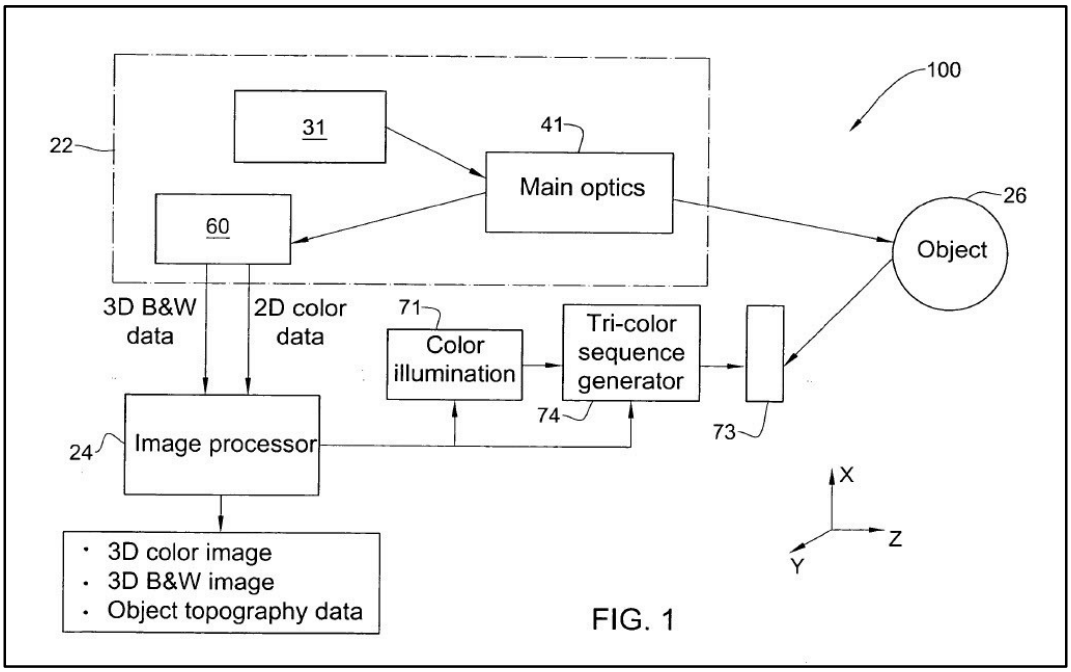

Id., FIG. 1.

Babayoff teaches examples of the scanner in FIGS. 4A and 8 as follows:

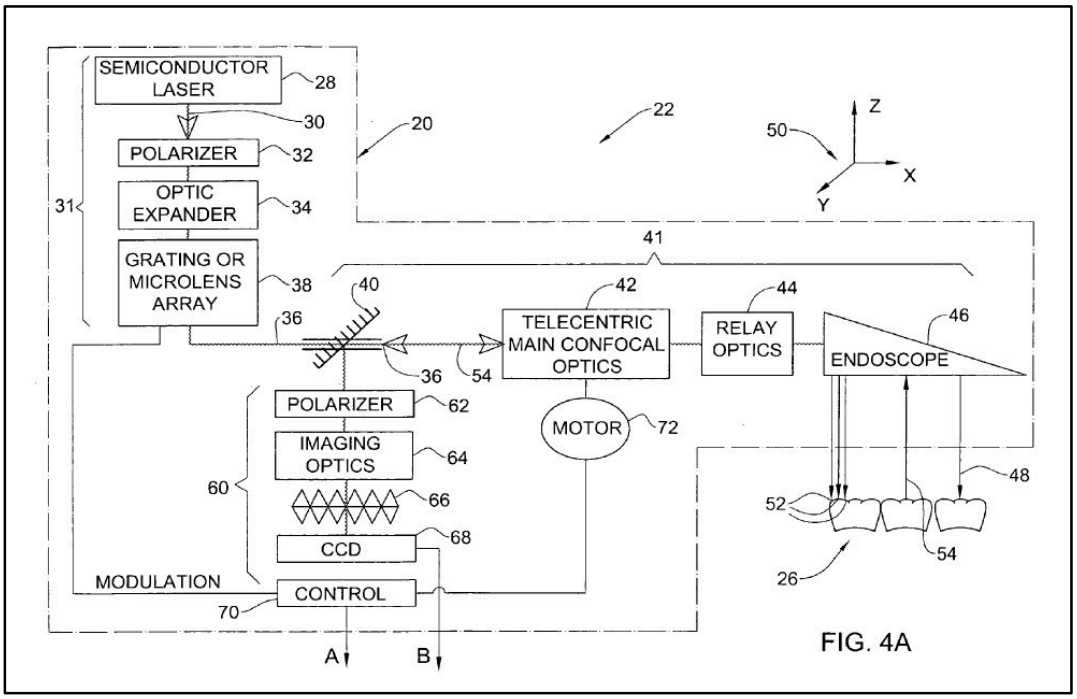

FIG. 4A

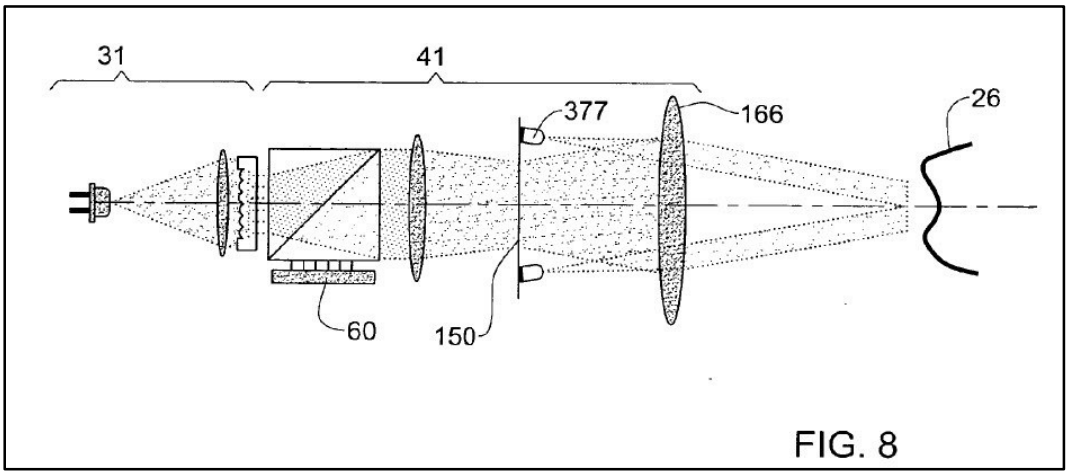

FIG. 8

The scanner is a confocal scanner, varies the position of a focal plane, and obtains images of the object at the different focal plane positions using an image sensor. *Id*., [0010]-[0011], [0032], [0142]. The scanner then uses images from the focal plane positions to determine, for each pixel, the focal plane for which the pixel is most in-focus and uses that information to determine the 3D surface

information for the pixel. *Id*., [0013]-[0015], [0034], [0143].

The scanner further includes three light sources that emit red, green, and blue light. *Id*., [0063]-[0066], [0079], [0130], [0157]. In a preferred embodiment, only one light source is switched on at a time, and an image is taken of the object for each of the light sources individually. *Id*. The color of the surface of the object is then determined based on the signal for each color in the captured images. *Id*., [0063], [0079], [0130], [0145]. Babayoff discloses that a processor 24 controls a tri-color sequence generator 74 to provide the different colored illuminations, and also explains that the processor 24 uses a CCD camera 68 to grab images for processing by the processor 24. *Id*., [0130], [0141], [0145].

B. Zhang

Similar to Babayoff, Zhang discloses a coaxial imaging system, and Zhang explains that an alternative to a camera focus/defocus method for obtaining 3D shape information is a projection defocus method in which an illumination pattern is shifted across a scene to allow for measuring depth information for a 3D shape. Ex. 1006, pp. 907-910, Figs. 1, 2. Zhang explains that multiple images are taken as the illumination pattern is shifted across the scene, and depth information is determined for each camera pixel using the images and knowledge of the illumination pattern. *Id*. Zhang provides an example of the illumination pattern as a stripe pattern that is shifted across the scene and can be formed, for example, by a

Digital Light Processing (DLP) or Liquid Crystal Display (LCD) projector. *Id*., pp. 907, 909, Fig. 2.

An example of the illumination pattern that is shifted across the scene is shown in Figure 2(b) of Zhang as follows:

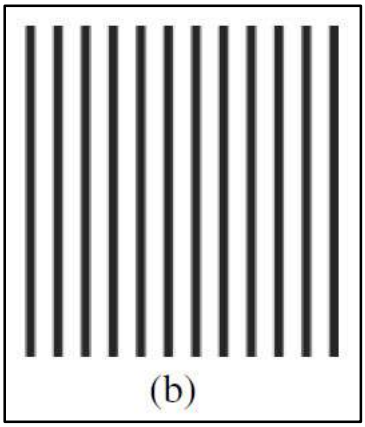

Id., Fig. 2(b). Zhang provides example scenes on which the depth recovery method of Zhang was performed, and one of the example scenes includes toy teeth. *Id*., Fig. 4.

Zhang provides the motivation for using a projection defocus method with a shifting illumination pattern as an alternative to a camera focus/defocus method by explaining that the projection defocus method for obtaining 3D shape information is more accurate near depth discontinuities, is simple, has lower computational complexity, is not subject to local minima, and is independent of scene geometry and texture, which makes it superior to camera defocus for depth estimation. *Id*., pp. 907-908, 914.

C. Knighton

Knighton discloses a hand-held scanner similar to Babayoff's for scanning an object to obtain 3D information for the surface of the object. Ex. 1007, Abstract, [0024]-[0025], [0033], [0038], [0045], [0049], [0093], FIGS. 1, 3. Knighton similarly discloses the capture of multiple images at distinct focus positions and then producing a depth map for the three-dimensional data based on the light intensities from the captured images. *Id*., [0026]-[0027], [0047]-[0053], FIG. 4. Knighton teaches that a processor 301 for performing the processing can be included in the hand-held device such that the processing is performed locally at the hand-held device to generate the 3D geometry data. *Id*., [0025], [0029], [0038]-[0039], [0041], [0049], [0054], [0093], FIG. 3. Knighton further explains that the hand-held device can include a communications device and an antenna for wirelessly transmitting the data for the 3D geometry. *Id*., [0033], [0038], [0045], [0049], [0054], [0093], FIGS. 1, 3.

FIG. 1 of Knighton depicts the wireless communication device 109 wirelessly transmitting data from the hand-held scanner.

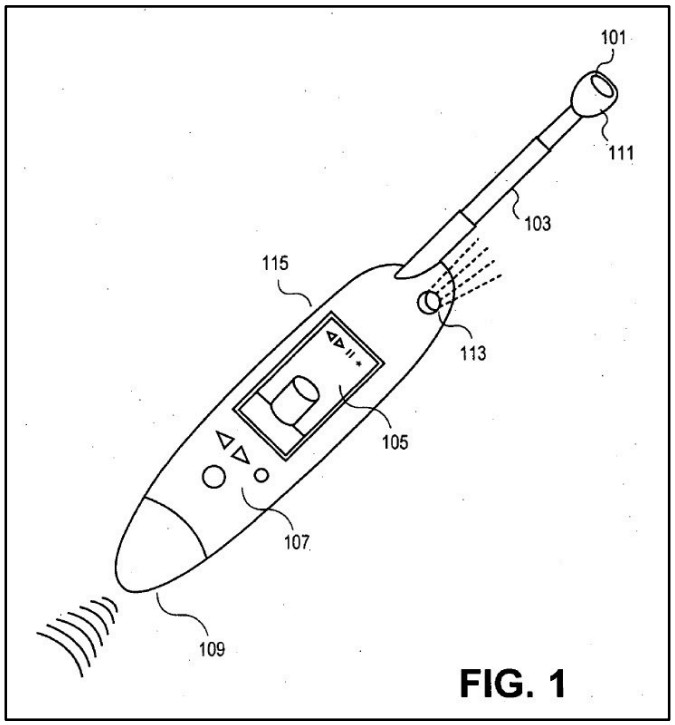

FIG. 1

Id., FIG. 1. Knighton explains that the wireless communication device 109 may be a radio frequency (RF) transmitter, cellular device, IEEE 802.11 device, or similar transmitter, and may support the Bluetooth standard, TCP/IP communication, and similar communication standards. *Id*., [0033].

Knighton further discloses that the scanner may include position detection devices or position sensing devices, such as the position tracking or detection sensor 321 that may be a single device or combination of devices. *Id*., [0044]. Knighton explains that the position detection devices may include a gyroscope, global position device, altimeter, or similar device that detects the orientation and position of the device in three dimensional space. *Id*. In one embodiment, a set of gyroscopes and accelerometers are used for each of an x, y, and z axis. *Id*.

Knighton explains that the position detection or tracking device may generate positions or movement output data that indicate the position or movement of the device that may be used by software executing on the processor 301 to generate the three dimensional representation of a target. *Id*.

Knighton discloses that multiple three dimensional representations and texture maps may overlap one another and may be continuously pieced together. *Id*., [0054], [0080]. Knighton explains that the tracking information from the position tracking or detection sensor may be used for that three dimensional representation and texture map generation. *Id*., [0080], [0082]. Knighton states that depth maps or texture maps with adjoining or overlapping surface areas may be combined in a three dimensional representation. *Id*., [0075].

D. Serra

Serra discloses a handheld 3D scanning device that can control display parameters to interactively manipulate 3D data in an interactive visualization mode. Ex. 1008, [0053]-[0054]. Just as in Knighton, the device of Serra includes a 3D tracker, one example of which is a 3D sensor 720, for tracking the 3D position of the device. *Id*., [0074]. The movement of the device in Serra can be used to rotate a scene on a display. *Id*., [0054]. Serra explains that the tracking information for the device can be used to rotate the entire scene (effectively changing the viewpoint of the user over the entire 3D scene). *Id*. Serra also teaches ergonomic

advantages from permitting a scanning process and an examination or display control process with the same device because a user is always holding the device, which makes it convenient to perform the scanning and display control with the same device. *Id*., [0053].

E. Gandyra

Gandyra also discloses an intraoral scanner for scanning teeth and teaches the use of a time-variable illumination pattern for the scanning. Ex. 1009, Abstract, [0001], [0030], [0038], FIG. 1. An example of the intraoral scanner is shown in FIG. 1:

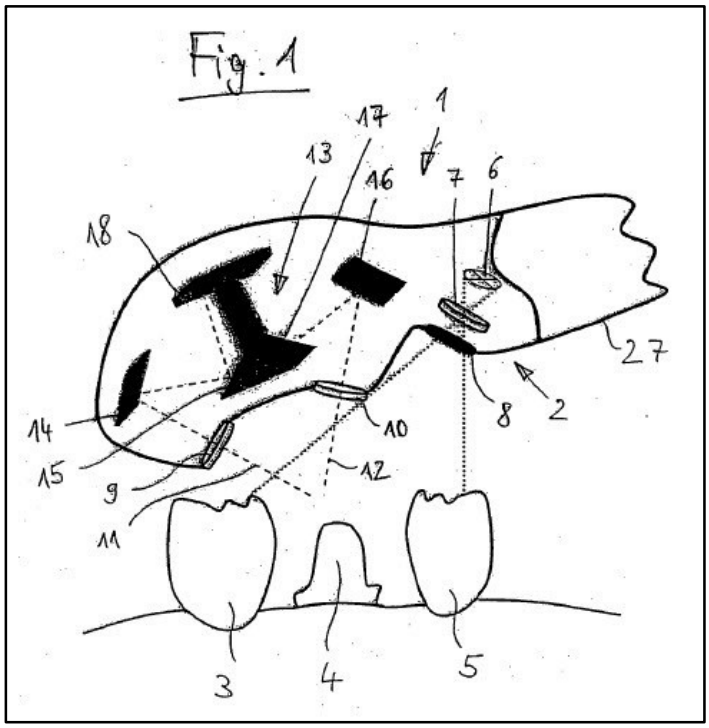

Gandyra teaches that the time-varying pattern can be any graphical pattern such as lines, and further teaches that the pattern can be produced using a pattern

transparency, which is a transparent pattern element. *Id*., [0030], [0038]. Gandyra also teaches that the time-varying pattern can be produced using a transmitted-light LCD or a DLP projection. *Id*., [0030], [0038].

VI. LEVEL OF ORDINARY SKILL IN THE ART

As explained in the Declaration of Dr. Mohit Gupta (Ex. 1002) ("Gupta Decl."), a person of ordinary skill in the art ("POSA") as of the effective filing date of the '667 patent would have had a bachelor's degree in Computer Engineering, Computer Science, Electrical Engineering, Physics, or an equivalent field, as well as at least one or two years of design experience, or alternatively, at least five years of comparable industry experience. In particular, a POSA would have had experience with and knowledge of 3D imaging systems and 3D modeling techniques. Ex. 1002, ¶25.

VII. CLAIM CONSTRUCTION

No terms in the challenged claims have been construed in any civil action. Petitioner submits that, for purposes of this proceeding, all claim terms should be given their ordinary and customary meaning.

VIII. DETAILED EXPLANATION OF GROUNDS

A. Ground 1: Claims 1-8, 13-16, 18-22, 26, and 28-29 Are Obvious Over Babayoff and Zhang and Knighton

1. A POSA Would Have Been Motivated to Combine Babayoff and Zhang and Knighton

Babayoff discloses a scanner for the intraoral scanning of objects such as teeth. Ex. 1005, Abstract, [0001]. Babayoff uses the ***illumination source 31***, which includes a ***light*** and a ***grating*** called the ***module 38*** to create a ***static pattern*** while capturing images. *Id*., [0134], [0135], FIGS. 4A, 8. Babayoff employs at least partially a ***camera defocus method*** to determine depth information from the captured 2D images. In particular, the scanner in Babayoff uses images from multiple focal plane positions to determine, for each pixel, the focal plane for which the pixel is most ***in-focus*** and uses that information to determine the 3D surface information. *Id*., [0013]-[0015].

Zhang discloses a coaxial imaging system like Babayoff and shows an example in which it is used to image ***teeth*** of a toy. Ex. 1006, pp. 907-910, Figs. 1, 2, 4. Zhang explains that an ***alternative*** to a ***camera defocus method*** for obtaining 3D shape information is a ***projection defocus method*** in which an illumination pattern is ***shifted*** across a scene to allow for measuring depth information. *Id*., pp. 907-910, Figs. 1, 2. To perform the projection defocus method instead of the camera defocus method, the ***illumination source 31*** in Babayoff would be

replaced with the DLP or LCD projector of Zhang to create a ***time-varying illumination pattern***. Then, the 2D images would be captured as the pattern is shifted, and the equations of Zhang would be used to determine the depth information. Ex. 1002, ¶46. A POSA would have understood how to size the projector to fit within a hand-held device, as is exemplified by Gandyra. *Id*.; Ex. 1009, [0030], [0038]. Gandyra shows in FIG. 2 that a ***DLP or LCD projector*** can be included in a ***hand-held device for scanning teeth***. *Id*., FIG. 2, [0030], [0038].

Zhang itself provides the ***motivation*** for using a ***projection defocus method*** as an alternative to the ***camera defocus method*** by explaining that the ***projection defocus method*** is ***more accurate*** near depth discontinuities, is ***simple***, has ***lower computational complexity***, is ***not subject to local minima***, and is ***independent of scene geometry and texture***, which makes it ***superior*** to camera defocus for depth estimation. Ex. 1006, pp. 907-908, 914; Ex. 1002, ¶47.

Babayoff does not explicitly state that communication of data from the hand-held scanner is wireless. Knighton discloses a ***hand-held scanner*** similar to Babayoff's for scanning an object. Ex. 1007, Abstract, FIGS. 1, 3. Knighton further explains that the ***hand-held scanner*** can include a ***communications device*** for ***wirelessly*** transmitting the data for the 3D geometry. *Id*., [0033], [0045].

It would have been obvious to a POSA to modify the hand-held device of Babayoff based on the teaching of Knighton to include the ***wireless***

communication device 109 to ***wirelessly*** transmit the ***data for the 3D geometry***. Ex. 1002, ¶49. A POSA would have been ***motivated*** to modify the device of Babayoff to use ***wireless communication*** as taught by Knighton because it would allow for the device to be ***wireless*** and, therefore, ***easier to carry around*** with ***improved usability*** in that the device would be ***more maneuverable*** with respect to an object being imaged. *Id*.

Babayoff discloses that a ***processor 24*** controls a tri-color sequence generator 74 to provide the different colored illuminations, and explains that the ***processor 24*** uses a CCD camera 68 to grab images for processing by the processor 24. Ex. 1005, [0130], [0141], [0145]. Babayoff also discloses that the ***processor 24*** determines the depth values for each point based on the image data to form the 3D entity, and aligns the 2D color images with the 3D entity. *Id*., [0129]-[0131]. Babayoff further discloses to construct the 3D entity by ***combining different surfaces of the structure together***. *Id*., [0093].

Knighton similarly discloses that depth maps or texture maps with adjoining or overlapping surface areas may be ***combined*** in a three dimensional representation, just as is done in Babyoff. Ex. 1007, [0054], [0075], [0080]; Ex. 1005, [0093]. Knighton further explains that ***tracking information*** from ***position tracking or detection sensors*** may be used to ***aid*** that three dimensional representation and texture map generation. Ex. 1007, [0080], [0082]. Knighton

discloses that the scanner may include the ***position detection devices*** or position sensing devices, such as the position tracking or detection sensor 321 that may be a single device or combination of devices. *Id*., [0044]. Knighton explains that the position detection or tracking device may generate positions or movement output data that ***indicate the position or movement of the device*** that may be used by software executing on a ***processor 301*** to generate the three dimensional representation of a target. *Id*. Knighton teaches that the processing to determine the 3D geometry can be performed ***local*** to the hand-held scanning device using the ***processor 301*** that is ***internal*** to the hand-held scanning device. *Id*., [0025], [0029], [0049], [0054], [0093], FIG. 3.

It would have been obvious to a POSA, therefore, to include the ***position tracking or detection sensors*** of Knighton on the device of Babayoff ***to obtain position data*** to be used to ***aid in generating the three dimensional representation of the structure*** as is done by Knighton in order to ***improve the combining*** of three dimensional data for surfaces of the structure. Ex. 1002, ¶52. It would also have been obvious to a POSA to have the ***processor 24*** of Babayoff be ***internal*** to the hand-held scanning device as is the ***processor 301*** in Knighton, because that would allow for making the device ***self-contained*** such that the device could perform the processing of the 3D geometry ***locally*** in the device as taught by Knighton, which would ***avoid the need*** to transmit ***all*** of the ***raw*** image data from the device. *Id*. A

POSA would have expected such a combination to work for its intended purpose because Knighton already shows how to use the position tracking or detection sensors on a hand-held scanning device for exactly such a purpose, and shows how to include the processor in the hand-held scanning device for local processing. *Id*.

2. Claim 1

[preamble] A handheld intraoral scanner for determining the 3D geometry and color of at least a part of the surface of an object in an oral cavity, the intraoral scanner comprising:

To the extent that the preamble of claim 1 is limiting, Babayoff discloses the features of the preamble. Ex. 1002, ¶¶53-54. The ***intraoral scanner*** in Babayoff is the ***device 100*** shown in FIG. 1. Ex. 1005, Abstract, [0001], [0009], [0128]-[0149], [0179], FIG. 1. The device in Babayoff is a ***hand-held*** device. *Id*., [0179]. Example parts of the device are shown in FIGS. 4A and 8 of Babayoff. *Id*., FIGS. 4A, 8.

Babayoff discloses that the device 100 is for ***determining the surface topology and associated color*** of a structure, such as a ***teeth*** segment in an ***oral cavity***. *Id*., Abstract, [0009], [0021], [0023], [0129]. Babayoff shows an example structure to be scanned as the ***object 26*** in FIGS. 4A, 5C, and 8, which is explained by Babayoff to be one or more ***teeth*** in an ***intraoral cavity***. *Id*., Abstract, [0009], [0129], [0183], FIGS. 4A, 5C, 8. Babayoff states that the surface topology that is determined of the object is a ***3D surface topology***, which provides the ***3D***

geometry of the object. *Id*., Abstract, [0010], [0020]-[0022], [0129], [0131], [0143], FIGS. 2A, 2B. Babayoff discloses that the ***color*** of the object is also determined and is associated with the 3D geometry of the object to provide a 3D digital representation of the object including color. *Id*., Abstract, [0001], [0009], [0020]-[0022], [0028], [0129]-[0131]. Thus, Babayoff discloses a handheld intraoral scanner for determining the 3D geometry and color of at least a part of the surface of an object in an oral cavity, because Babayoff discloses a hand-held intraoral scanner for determining the 3D geometry and color of the surface of teeth in an oral cavity.

[a] a tip configured to be inserted into the oral cavity;

Babayoff discloses this limitation of claim 1. Ex. 1002, ¶¶55-57. The ***tip*** in Babayoff is the ***endoscope 46*** that can be in the form of a ***probing member 90***. Ex. 1005, [0137], [0146], FIGS. 4A, 5A, 5B, 5C. An endoscope is a structure that is designed to be inserted into a body cavity, which in Babayoff is the mouth. *Id*., Abstract, [0001], [0021], [0183], FIGS. 4A, 5C, 8. Babayoff shows that the probe light is transmitted through the tip of the intraoral scanner that is inserted into the ***oral cavity*** to scan one or more ***teeth***. *Id*., [0137], [0146], FIGS. 4A, 5C, 8. The below annotated version of FIG. 4A highlights the endoscope 46.

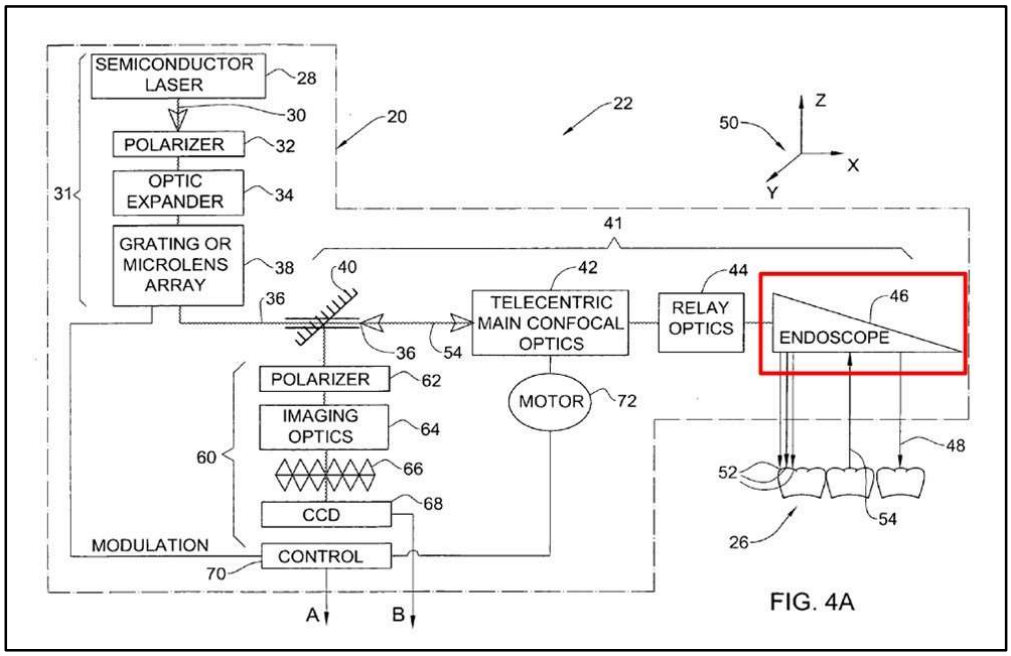

FIG. 4A

Id., FIG. 4A (annotated).

The below annotated version of FIG. 5B highlights an example of an end of the probing member 90.

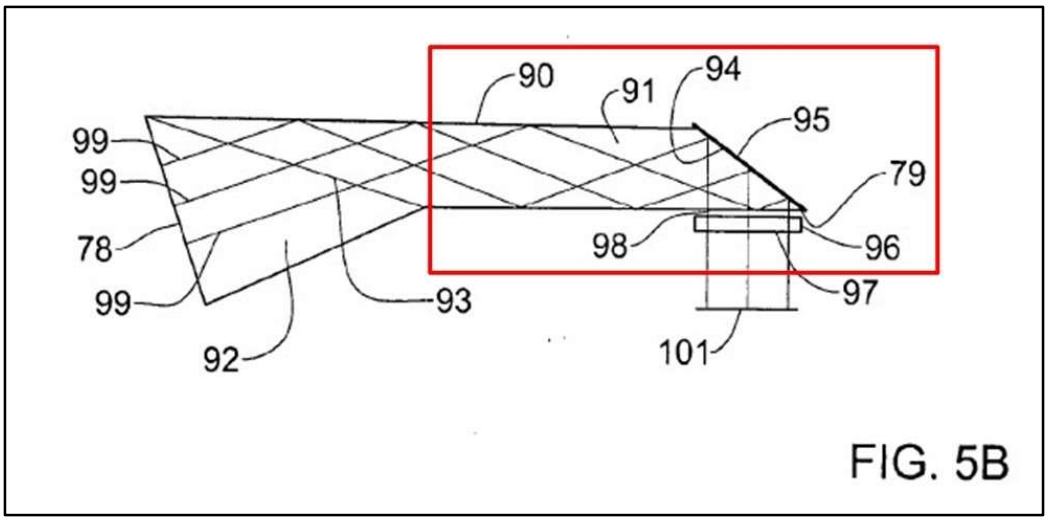

FIG. 5B

Id., FIG. 5B (annotated).

The below annotated version of FIG. 5C highlights another example of an

end of the probing member 90.

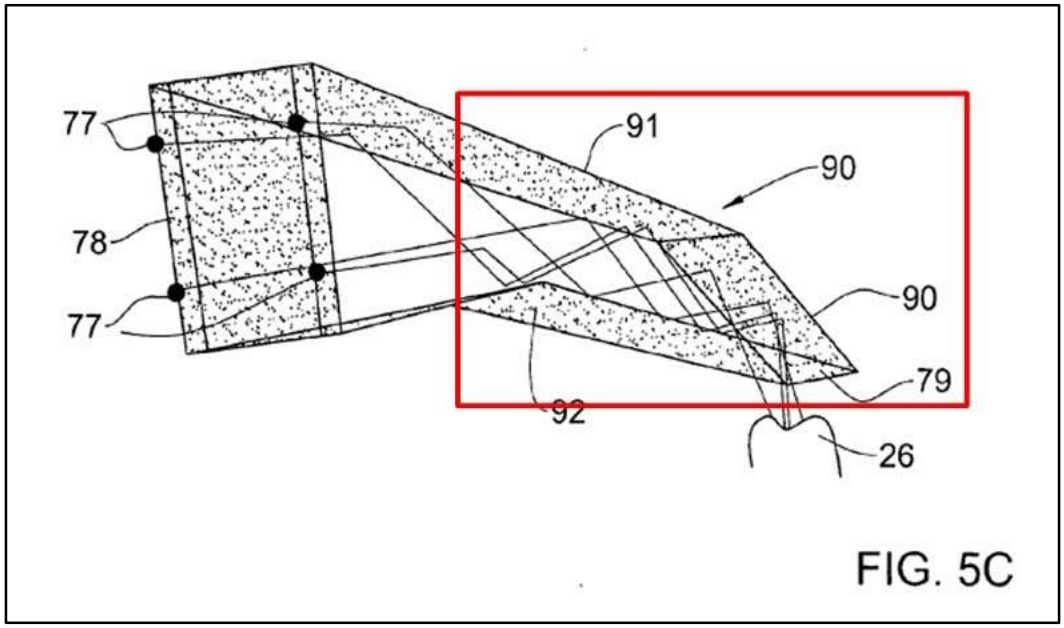

Id., FIG. 5C (annotated).

[b] at least one camera accommodating an array of sensor elements;

Babayoff discloses these limitations of claim 1. Ex. 1002, ¶¶58-60. The at least one ***camera*** in the device of Babayoff is an ***image sensor*** that is part of the ***detection optics 60***. Ex. 1005, [0002], [0011], [0033], [0042], [0129], [0134]-[0141], [0145], FIGS. 1, 4A, 8. The ***image sensor*** in Babayoff is called a ***camera*** and is described as having an ***array of sensor elements***, which Babayoff explains could be, for example, an ***array of charge coupled devices (CCD) 68***. *Id*., [0042], [0129], [0140]-[0141], [0145], FIG. 4A.

The below annotated version of FIG. 4A highlights the ***CCD 68 camera*** in red.

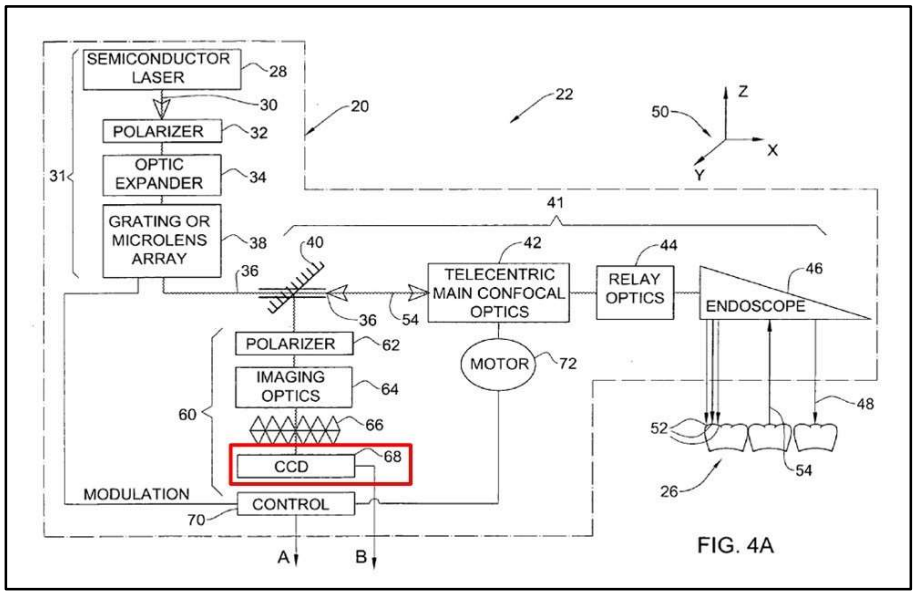

Id., FIG. 4A (annotated).

Similarly, the below annotated version of FIG. 8 highlights the detection optics 60 in red, which includes the image sensor that is the camera.

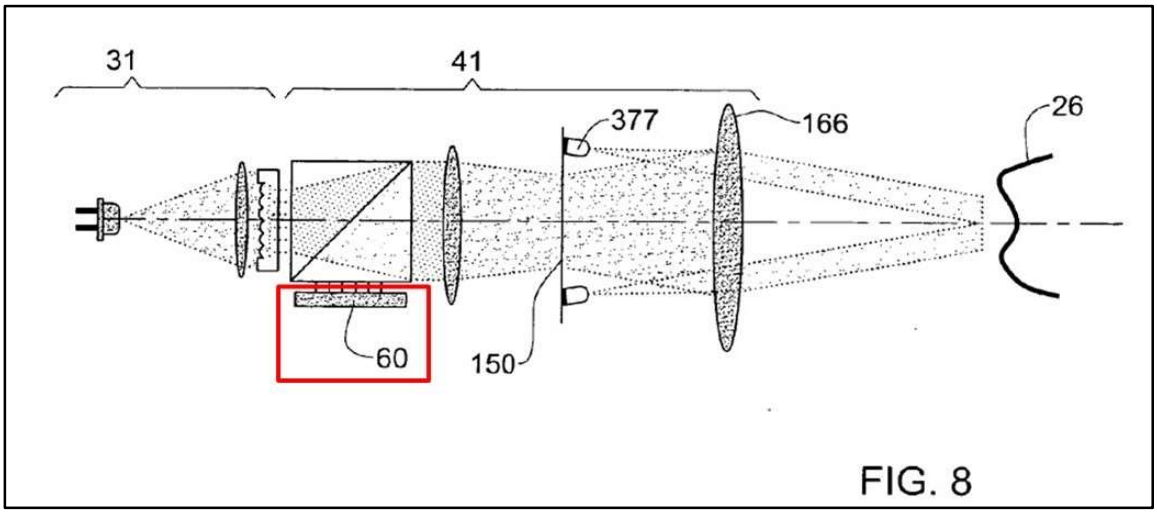

Id., FIG. 8 (annotated).

[c] a pattern generator configured to generate, using a light source, a probe light with a plurality of configurations in the form of a time-varying illumination pattern;

Babayoff in combination with Zhang satisfies these limitations of claim 1. Ex. 1002, ¶¶61-72. The ***light source*** in Babayoff is part of the ***illumination source 31***, which is also called the ***illuminating unit 31***, as shown for example in the embodiments of FIGS. 4A and 8. Ex. 1005, [0030], [0134], [0135], [0139], [0156]-[0157], FIGS. 1, 4A, 8. Namely, FIG. 4A of Babayoff shows the ***light source*** as the ***semiconductor laser unit 28***, and FIG. 8 Babayoff shows a ***light*** as the ***light source***. *Id*.

The ***pattern generator*** in Babayoff is also part of the ***illumination source 31***, and is shown in FIGS. 4A and 8 as a ***grating*** or ***micro-lens array*** called the ***module 38***. *Id*., [0135], FIGS. 4A, 8. Babayoff explains that the module 38 splits the parent light beam 30 into a plurality of incident light beams 36. *Id*. The plurality of incident light beams 36 travel through the main optics 41 to provide the incident light beams 48, which are an array of light beams and therefore form a pattern on the surface of the object 26. *Id*., [0135]-[0139], FIGS. 1, 4A, 8. Ex. 1002, ¶62. The ***incident light beams 36*** that become the ***incident light beams 48*** are a ***probe light***. Ex. 1005, [0135]-[0139], FIGS. 1, 4A, 8. Ex. 1002, ¶62.

FIG. 4A of Babayoff is annotated in red below to show the illumination source 31 that includes the semiconductor laser unit 28 as well as the module 38

that is a grating or micro-lens array, which provides the incident light beams 36 that become the incident light beams 48.

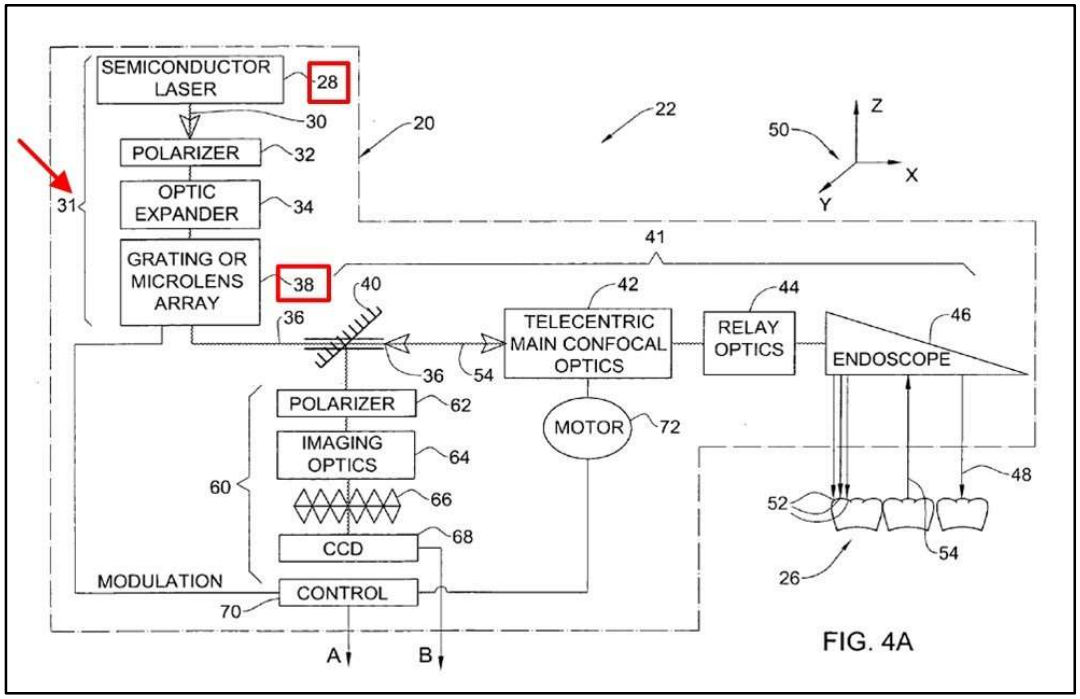

Ex. 1005, FIG. 4A (annotated).

FIG. 8 of Babayoff is annotated in red below to similarly show the illumination source 31, a portion of which is a light source.

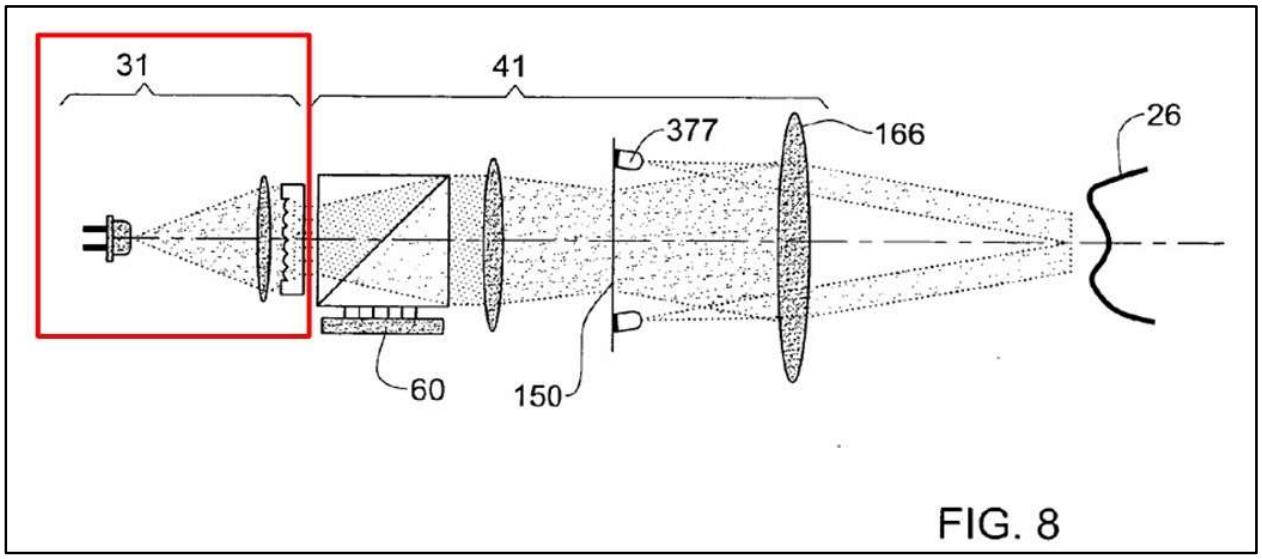

Id., FIG. 8 (annotated).

Babayoff discloses a technique for determining a Z or depth coordinate for each location on the object 26 for the 3D representation. *Id*., [0010]-[0015], [0139]-[0143] In particular, Babayoff provides motor 72 that is linked to the telecentric confocal optics 42 for changing the relative location of the focal plane of the optics 42 along the Z-axis. *Id*., [0142], FIG. 4A. As explained in Babayoff, the motor 72 displaces the optical element 42 to change the focal plane location and then an image is captured by the image-capturing module 80 for that focal plane location. *Id*. This process is repeated for different focal plane locations with an image taken for each focal plane location, and the motor 72 is used to change between the focal plane locations. *Id*., [0011], [0032], [0139]-[0142]. Babayoff then determines the Z-axis depth coordinate for each (X, Y) location by analyzing the light intensity at the location in the captured images. *Id*., [0012]-[0015], [0139],

[0143]. For determining the depth coordinates, therefore, Babayoff takes an image at each focal plane position using the light pattern as created by the illumination source 31. *Id*., [0011], [0032], [0139]-[0142], FIGS. 4A, 8.

Babayoff does not explicitly disclose that the light pattern is time-varying. However, Zhang is in the same field as Babayoff because Zhang also discloses a ***confocal*** or ***coaxial*** imaging system like Babayoff for obtaining 3D shape information of objects including ***teeth***, and Zhang discloses to use a light source and a pattern generator to generate a probe light with a plurality of configurations in the form of a time-varying illumination pattern. Ex. 1002, ¶66; Ex. 1006, pp. 907-910, Figs. 1, 2, 4, 9. As discussed above, Babayoff employs at least partially a ***camera defocus method*** for determining the depth coordinates. Ex. 1005, [0011], [0032], [0139]-[0142], FIGS. 4A, 8. Zhang discloses that an ***alternative*** to a ***camera defocus method*** for determining the depth coordinates is a ***projection defocus method*** in which an ***illumination pattern*** is ***shifted*** across the object being imaged to measure depth. Ex. 1006, pp. 907-910, 914-915, Figs. 1, 2.

Zhang provides an example of the ***illumination pattern*** as a ***stripe pattern*** that is ***shifted across the scene*** and can be formed, for example, by a Digital Light Processing (DLP) or Liquid Crystal Display (LCD) projector. *Id*., pp. 907, 909, Fig. 2. An example of the illumination pattern that is shifted across the scene is shown in Figure 2(b) of Zhang as follows:

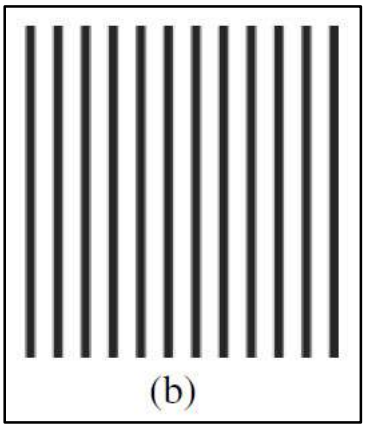

Id., Fig. 2(b).

The ’667 patent states that a time varying pattern can be created by moving a pattern across the object being scanned. Ex. 1001, 3:10-17, 8:56-60, 10:53-55. The ***illumination pattern*** of Zhang that is ***shifted across the scene*** at time intervals, therefore, is a ***time-varying illumination pattern***. Ex. 1006, p. 909, Fig. 2(b). The ***DLP or LCD projector*** of Zhang is the ***light source and pattern generator*** to generate the ***probe light*** with the plurality of configurations in the form of the time-varying illumination pattern. *Id*., pp. 907, 909, Figs. 1, 2. The ***plurality of configurations*** are the ***stripes being translated across the scene***. *Id*.

It would have been obvious to a POSA, therefore, to ***replace the illumination source 31*** in Babayoff ***with the DLP or LCD projector of Zhang*** to create a ***time-varying illumination pattern*** and to determine depth using the ***projection defocus method*** of Zhang rather than the method of Babayoff, because Zhang’s projection defocus method is ***more accurate*** near depth discontinuities, is

simple, has ***lower computational complexity***, is ***not subject to local minima***, and is ***independent of scene geometry and texture***. Ex. 1002, ¶69. Being independent of scene geometry is an advantage because then a wide range of scenes can be imaged. In the combination, the ***DLP*** or ***LCD projector*** would be the ***light source*** and the ***pattern generator*** to generate the probe light with the plurality of configurations in the form of a time-varying illumination pattern, which is the ***stripe pattern that is shifted across the scene***.

Motivation to Combine Babayoff and Zhang:

Zhang provides the ***motivation*** for using a ***projection defocus method*** with a shifting illumination pattern as an ***alternative*** to a ***camera defocus method*** by explaining that the ***projection defocus method*** for obtaining 3D shape information is ***more accurate*** near depth discontinuities, is ***simple***, has ***lower computational complexity***, is ***not subject to local minima***, and is ***independent of scene geometry and texture***, which makes it ***superior*** to ***camera defocus*** for depth estimation. *Id*., 907-908, 914. A POSA, therefore, would have been motivated to ***replace the illumination source 31*** in Babayoff ***with the DLP or LCD projector*** of Zhang to create a time-varying illumination pattern and to determine depth using the projection defocus method of Zhang rather than the method of Babayoff in order to obtain those advantages. Ex. 1002, ¶70.

A POSA would have expected such a combination to work for its intended

purpose because Zhang already applied the time-varying illumination pattern technique to structures that are on the same scale as parts of teeth, including toys with teeth, so it would be expected to work for imaging teeth. *Id*., ¶71. Ex. 1006, Figs. 4, 9. Further, the modification to the Babayoff device to include a DLP or LCD projector as taught by Zhang in place of the illumination source 31 would have been straightforward for a POSA to implement because it is just the substitution of one known element for another. Ex. 1002, ¶71.

A POSA would have understood how to size the projector to fit within a hand-held device as is exemplified by Gandyra. *Id*., ¶72; Ex. 1009, [0030], [0038]. Gandyra shows in FIG. 2 that a ***DLP or LCD projector*** can be included in a ***hand-held device for scanning teeth***. *Id*., FIG. 2, [0030], [0038]. The '667 patent itself also states in the specification that "[a] varying illumination pattern may [be] generated by a LCD or DLP based projector." Ex. 1001, 13:37-38. Thus, the '667 patent itself is written with the understanding that a POSA would understand how to include an LCD or DLP projector in a hand-held scanning device. A POSA, therefore, would have been able to replace the illumination source 31 in Babayoff with the DLP or LCD projector as taught by Zhang. Ex. 1002, ¶72.

> **[d] an optical system configured to transmit the probe light, via the tip, towards the object along an optical path thereby illuminating at least a part of the object with the time-varying illumination pattern, and to transmit at least a part of the light returned from the object to the at least one camera to form a plurality of 2D images, wherein the 3D geometry is determined based on the plurality of 2D images and the time-varying illumination pattern;**

Babayoff in combination with Zhang satisfies these limitations of claim 1. Ex. 1002, ¶¶73-81. The ***optical system*** in Babayoff includes at least part of the ***main optics 41***, such as the ***confocal optics 42*** and the ***relay optics 44***, which form an optical path. Ex. 1005, [0137]-[0139], FIGS. 4A, 8. Babayoff shows that the probe light from the illumination source 31 is transmitted toward the object 26 along the optical path provided by the main optics 41 and goes through the tip such as part of the endoscope 46. *Id*., [0134]-[0139], FIGS. 4A, 5C, 8.

The below annotated version of FIG. 4A highlights part of the main optics 41 through which the probe light is transmitted.

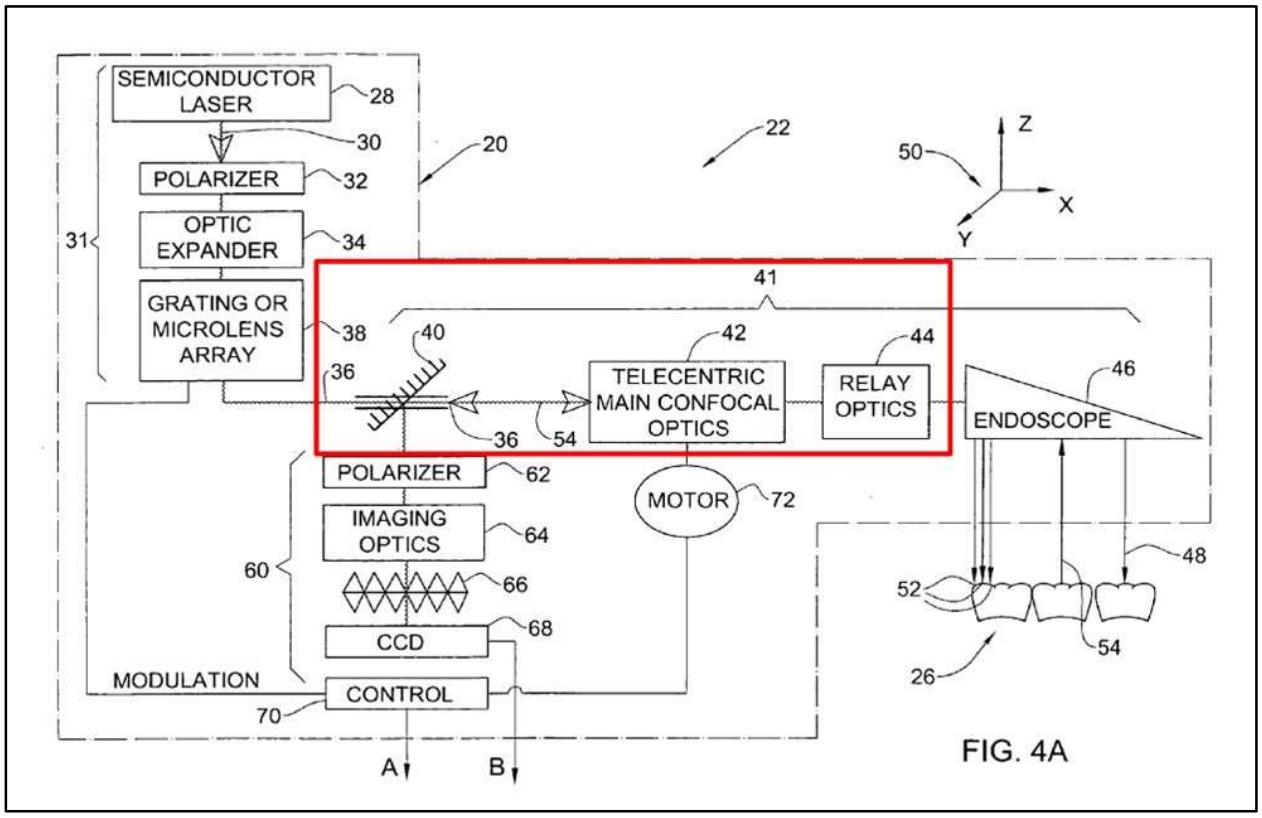

Id., FIG. 4A (annotated).

Similarly, the below annotated version of FIG. 8 highlights part of the main optics 41 through which the light is transmitted.

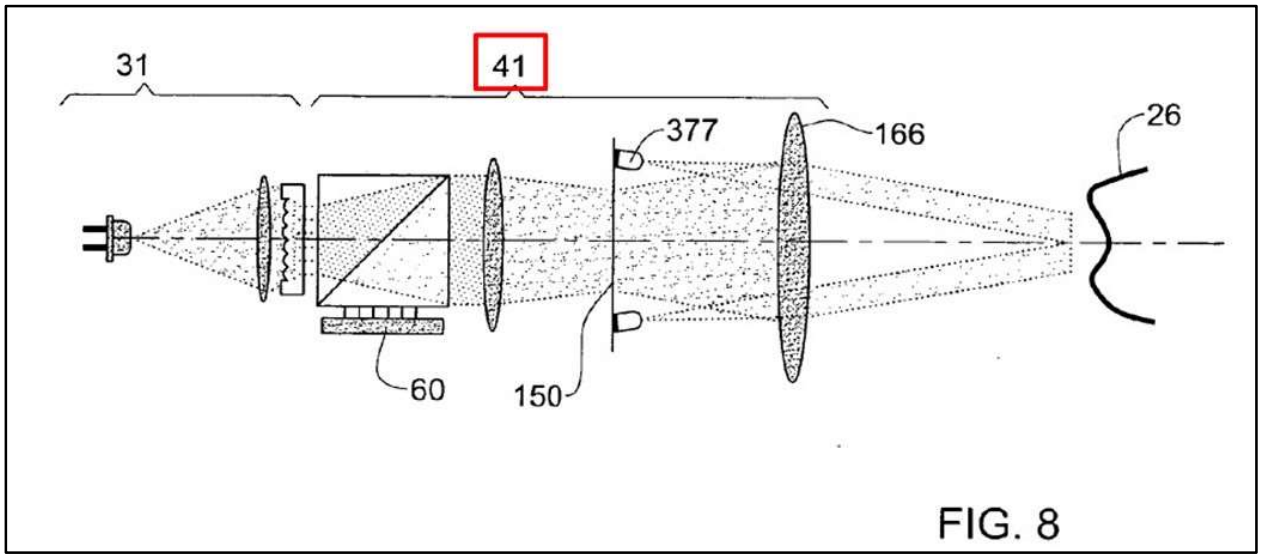

Id., FIG. 8.

As discussed *supra*, in the combination, the ***illumination source 31*** in Babayoff is ***replaced*** with the ***DLP or LCD projector*** as taught by Zhang, which provides the probe light with the time-varying illumination pattern. Ex. 1005, FIGS. 1, 4A, 8; Ex. 1006, pp. 907-909. The probe light, therefore, is transmitted through the ***tip*** of the intraoral scanner, such as part of the ***endoscope 46*** that can be in the form of a ***probing member 90***. Ex. 1005, [0137], [0146], FIGS. 4A, 5C. The probe light is transmitted toward the object 26 along an optical path, which includes at least part of the ***main optics 41***, such as the ***confocal optics 42*** and the ***relay optics 44***. *Id*. By having the illumination source 31 of Babayoff replaced by the projector of Zhang to provide the probe light with the time-varying illumination pattern, at least part of the object 26 in Babayoff would thereby be illuminated with the time-varying illumination pattern. Ex. 1002, ¶76.

Babayoff further shows that at least part of the light ***returned*** from the object 26 is transmitted to an ***image sensor***, which is part of the ***detection optics 60***. Ex. 1005, [0002], [0011], [0033], [0042], [0129], [0134]-[0141], [0145], FIGS. 1, 4A, 8. The ***image sensor*** in Babayoff is called a ***camera*** and accommodates an ***array of sensor elements***, which Babayoff explains could be, for example, an ***array of charge coupled devices (CCD) 68***. *Id*., [0042], [0129], [0140]-[0141], [0145], FIG. 4A. Babayoff explains in paragraph [0140] that the returned light beams 54 from

the object 26 travel initially along the opposite direction of the optical path traveled by the incident light beams and are then reflected by the mirror 40 in the direction of the detection optics 60 where the ***camera*** uses the array of sensing elements to form each 2D image. *Id*., [0011], [0139]-[0143], FIGS. 4A, 8.

The below annotated version of FIG. 4A highlights the CCD 68 camera in red.

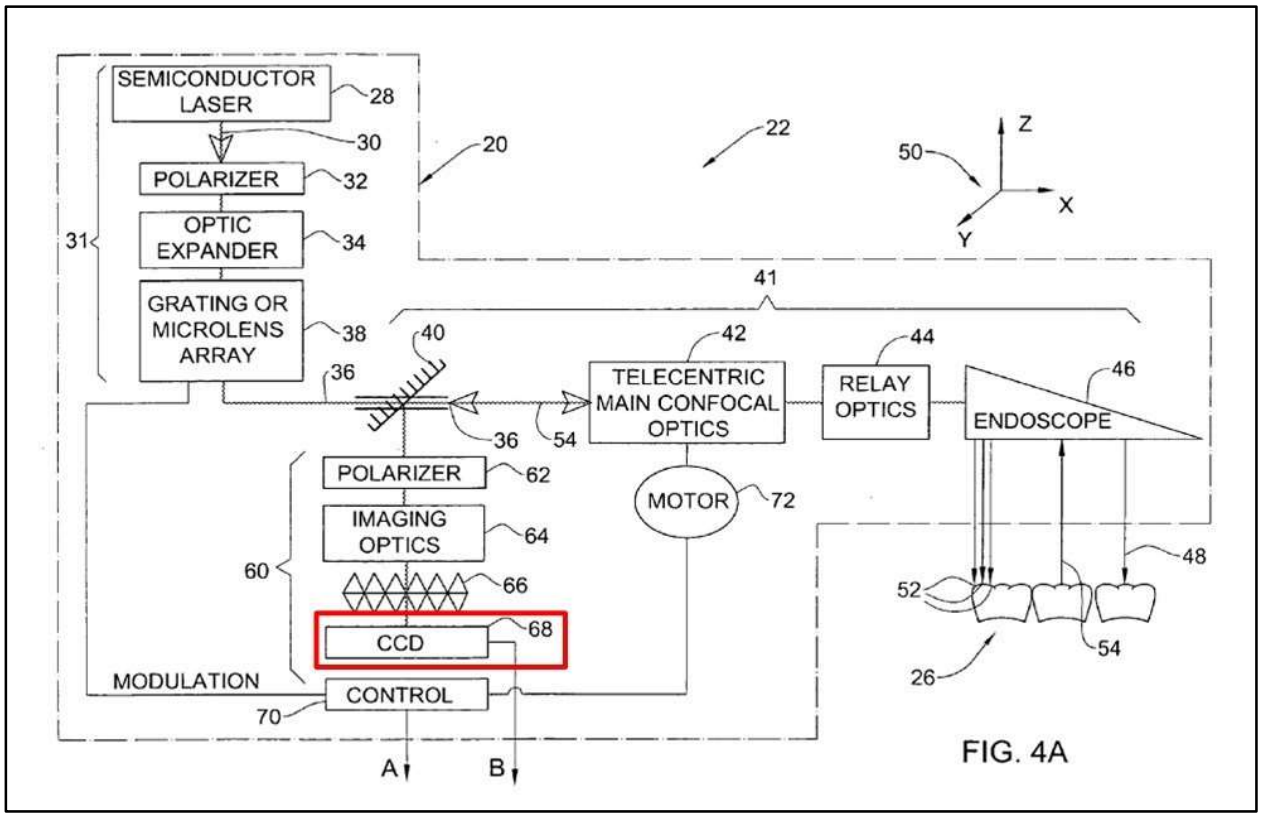

Id., FIG. 4A (annotated).

Similarly, the below annotated version of FIG. 8 highlights the detection optics 60 in red, which includes the image sensor.

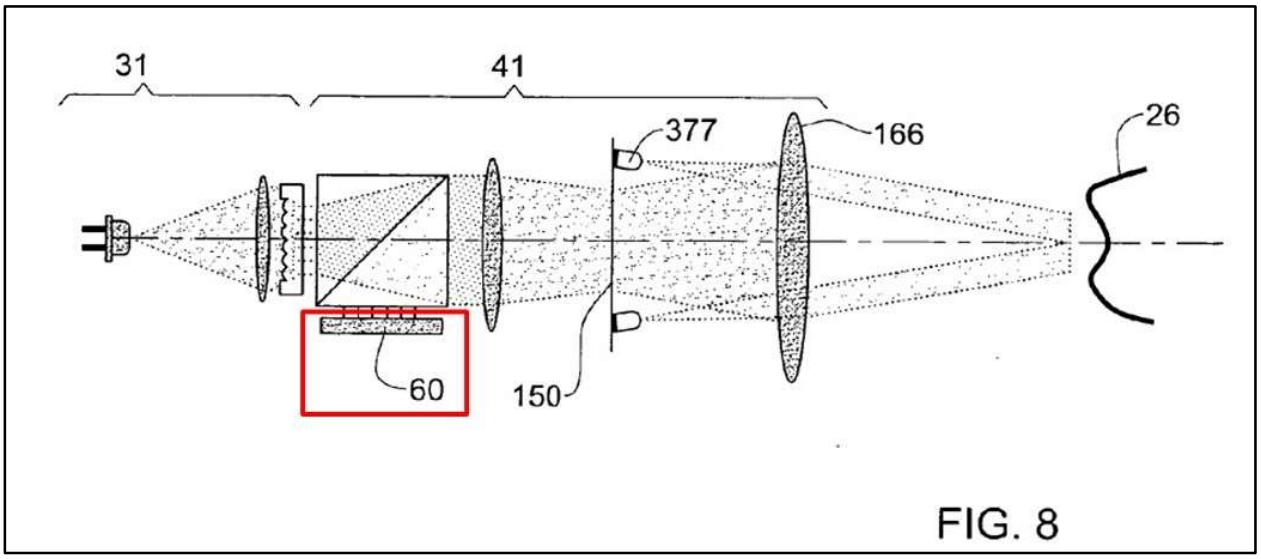

Id., FIG. 8 (annotated). Just as in Babayoff, Zhang also uses a ***camera*** with a plurality of pixels, so the combination would work with the camera of Babayoff. Ex. 1006, pp. 907-909.

As discussed *supra*, the device 100 of Babayoff in combination with Zhang would use the projector of Zhang to shift the time-varying illumination pattern across the object being imaged and would ***capture a plurality of 2D images*** with the camera. Ex. 1005, [0011], [0142], FIG. 4A; Ex. 1006, pp. 907-910, 915, Fig. 1. Then, the projection defocus method described in Zhang would be used to determine the Z or depth coordinate for each (X, Y) position ***based on the plurality of 2D images*** and ***knowledge of the time-varying illumination pattern***. Ex. 1006, pp. 907-910. The result is the 3D geometry for the object. *Id*. Zhang explains that the determination of the depth values is based on both the scene radiance as captured in the 2D images and on the projection illumination pattern, which allows

for the equations in Zhang to be valid for estimating depth. *Id*., p. 909. The 3D geometry, therefore, is determined based on the plurality of 2D images and the time-varying illumination pattern. *Id*. For a particular illumination pattern, the determination can be made using a pre-computed lookup table, which is valid for the pattern, and the plurality of 2D images as described in Zhang. *Id*., p. 910.

It would have been obvious to a POSA to determine the 3D geometry using the projection defocus method of Zhang in the device of Babayoff because Zhang explains that the ***projection defocus method*** is ***more accurate*** near depth discontinuities, is ***simple***, has ***lower computational complexity***, is ***not subject to local minima***, and is ***independent of scene geometry and texture***. *Id*., pp. 907-908, 914; Ex. 1002, ¶81. A POSA would have had an expectation of success with the combination because it uses the projection defocus method of Zhang with the time-varying illumination pattern for determining depth in place of the method of Babayoff, which is exactly what Zhang taught to do to obtain the noted advantages. *Id*.

[e] one or more motion sensors located on the intraoral scanner to measure three-dimensional motion of the intraoral scanner, wherein the intraoral scanner is wireless; and

Babayoff in combination with Zhang and Knighton satisfies these limitations of claim 1. Ex. 1002, ¶¶82-92.

One or More Motion Sensors Located on the Intraoral Scanner to Measure Three-Dimensional Motion of the Intraoral Scanner:

Babayoff in combination with Knighton satisfies the limitation of one or more motion sensors located on the intraoral scanner to measure three-dimensional motion of the intraoral scanner. *Id*., ¶¶83-85. Babayoff discloses that surface topologies may be determined for two different surfaces of a structure, such as a teeth segment, and then the surface topologies may be ***combined*** to obtain topological data representative of the structure. Ex. 1005, [0093]. Knighton similarly discloses that multiple three dimensional representations and texture maps may overlap one another and may be continuously ***pieced together***. Ex. 1007, [0054], [0080]. Indeed, Knighton states that depth maps or texture maps with adjoining or overlapping surface areas may be ***combined*** in a three dimensional representation, just as is done in Babyoff. *Id*., [0075]; Ex. 1005, [0093]. Knighton further explains that ***tracking information*** from ***position tracking or detection sensors*** may be used to ***aid*** that three dimensional representation and texture map generation. Ex. 1007, [0080], [0082].

Knighton discloses that the scanner may include the ***position detection devices*** or ***position sensing devices***, such as the ***position tracking or detection sensor 321*** that may be a single device or combination of devices. *Id*., [0044].

Knighton explains that the ***position detection devices*** may include a gyroscope, global position device, altimeter, or similar device, which are motion sensors, that detect the ***orientation*** and ***position*** of the device in three dimensional space. *Id*. In one embodiment, a set of gyroscopes and accelerometers are used for each of an x, y, and z axis. *Id*. Knighton explains that the position detection or tracking device may generate ***positions*** or movement output data that ***indicate the position or movement of the device*** that may be used by software executing on the processor 301 to generate the three dimensional representation of a target. *Id*.

It would have been obvious to a POSA, therefore, to include the ***position tracking or detection sensors*** of Knighton on the device of Babayoff to obtain ***position data*** to be used to ***aid*** in generating the three dimensional representation of the structure as is done by Knighton in order to ***improve*** the ***combining*** of three dimensional data for surfaces of the structure. Ex. 1002, ¶85. A POSA would have expected such a combination to work for its intended purpose because Knighton already shows how to use the position tracking or detection sensors on a hand-held scanning device for exactly such a purpose. *Id*.

Wherein The Intraoral Scanner is Wireless:

Babayoff in combination with Zhang and Knighton satisfies the limitation that the intraoral scanner is wireless. Ex. 1002, ¶86. Babayoff discloses that the device can be a hand-held device in which the hand-held device includes the

endoscope 46, the illumination unit 31, the main optics 41, color illumination 71, tri-color sequence generator 74, and detector optics 60. Ex. 1005, [0179], FIGS. 1, 4A, 8. Babayoff does not explicitly disclose that the hand-held device uses wireless transmission, but does provide a modem 88 for transmission of the 3D data. *Id*., [0065], [0093], [0180]. Knighton is in the same field as Babayoff and teaches to have a hand-held scanner ***wirelessly*** transmit data for the 3D geometry of an object. Ex. 1007, Abstract, [0024]-[0025], [0033], [0038], [0045], [0049], [0093], FIGS. 1, 3.

The processing performed in Knighton is similar to the processing performed in Babayoff and Zhang because Knighton similarly discloses to capture multiple images and then to produce a depth map for three dimensional data based on the light intensities from the captured images. Ex. 1007, [0026]-[0027], [0047]-[0053], FIG. 4. Knighton teaches that the ***processor 301*** for performing the processing can be ***included in the hand-held device*** such that the processing is performed ***locally*** at the hand-held device to generate the 3D geometry data. *Id*., [0025], [0029], [0038]-[0039], [0041], [0049], [0054], [0093], FIG. 3. Knighton explains that the hand-held device can include the ***communications device 317*** and the antenna 319 for ***wirelessly*** transmitting the data for the 3D geometry. *Id*., [0033], [0038], [0045], [0049], [0054], [0093], FIGS. 1, 3.

An annotated version of FIG. 1 of Knighton is shown below with the

wireless communication device 109 and wireless communication symbol highlighted in red:

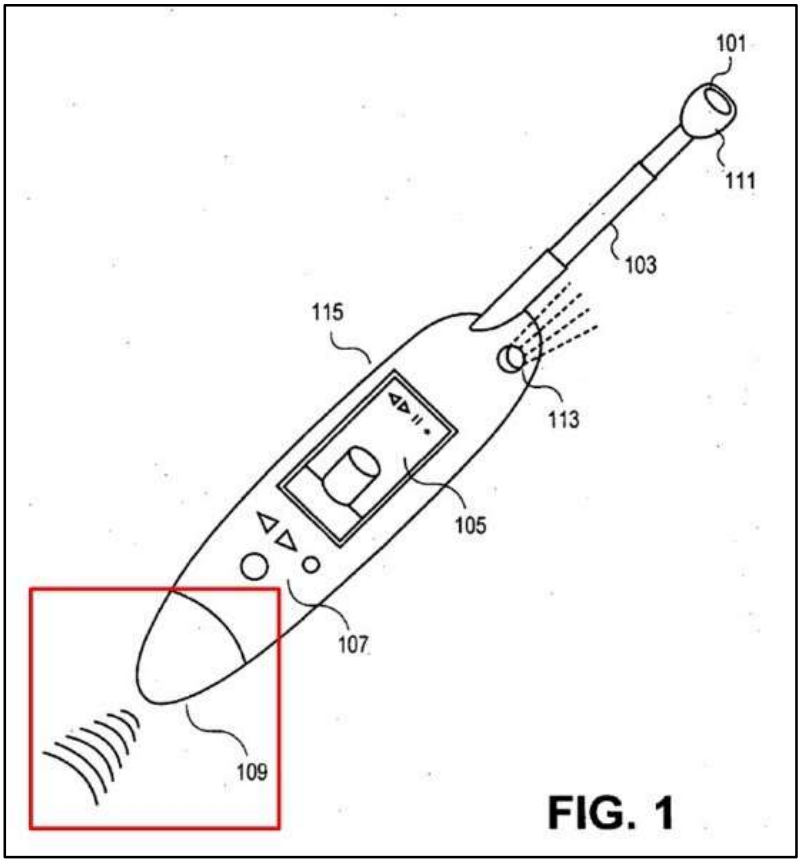

Id., FIG. 1 (annotated).

FIG. 3 of Knighton is annotated below to show in red the ***communications device 317*** and the antenna 319 of the hand-held scanner device for the wireless transmission.

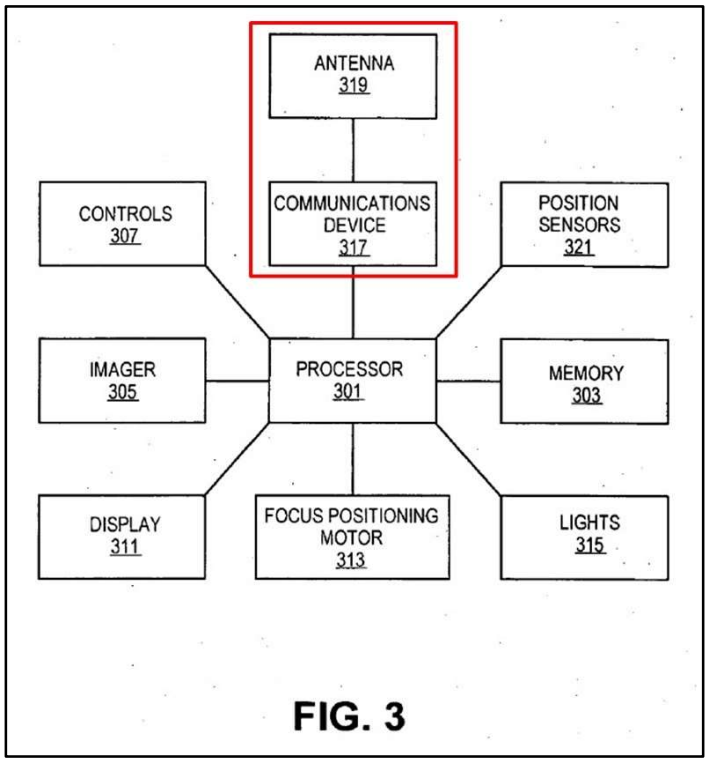

Id., FIG. 3 (annotated).

It would have been obvious to a POSA to modify the hand-held device of Babayoff based on the teaching of Knighton to include a ***processor*** in the device of Babayoff to process data for the 3D geometry ***locally*** in the device using the method of Zhang, and to include the ***wireless communication device 109*** in the device of Babayoff to ***wirelessly*** transmit the ***data for the 3D geometry***. Ex. 1002, ¶90. A POSA would have expected such a modification to be successful because Knighton discloses a ***hand-held*** scanner including those components for those purposes, so those components could be incorporated into the ***hand-held*** scanner of Babayoff for ***performing the same intended purpose***. *Id*.

Knighton explains that the ***wireless communication device 109*** may be a

radio frequency (RF) transmitter, cellular device, IEEE 802.11 device, or similar transmitter, and may support the Bluetooth standard, TCP/IP communication, and similar communication standards. Ex. 1007, [0033]. Knighton, therefore, recognized that there were already ***standard*** wireless communication devices that could be used for this purpose. The only support for the "wireless" limitation in the '667 patent is one statement in the '667 patent specification that says "the scanner head may be wireless…." Ex. 1001, 9:19-26. Thus, the '667 patent itself is written with the understanding that a POSA would understand how to include circuitry for wireless communication in a hand-held scanning device. *Id*.

Motivation to Combine Babayoff and Knighton:

A POSA would have been ***motivated*** to modify the device of Babayoff to ***locally process data*** and use ***wireless communication*** as taught by Knighton because it would allow for the device to be ***wireless*** and, therefore, ***easier to carry around*** with ***improved usability*** in that the device would be ***more maneuverable*** with respect to an object being imaged. Ex. 1002, ¶92; Ex. 1007, [0033], [0038], [0045], FIG. 1. Performing ***local processing*** at the ***hand-held*** device as taught by Knighton allows for avoiding the need to transmit ***all*** of the ***raw*** image data. *Id*., [0038], [0054], [0093]. Knighton demonstrates that ***wireless communication*** was one of the ***known options*** for ***hand-held scanning devices*** that scan three-dimensional objects. *Id*., [0033], [0045], FIGS. 1, 3.

[f] a hardware processor, located within the wireless intraoral scanner, configured to:

Babayoff in combination with Knighton satisfies this limitation of claim 1. Ex. 1002, ¶¶93-98. The ***hardware processor*** in Babayoff is the ***processor 24***. Ex. 1005, [0129]-[0131], [0133], [0141], [0145], FIG. 1, 4B. An annotated version of FIG. 1 of Babayoff is provided below that highlights the processor 24.

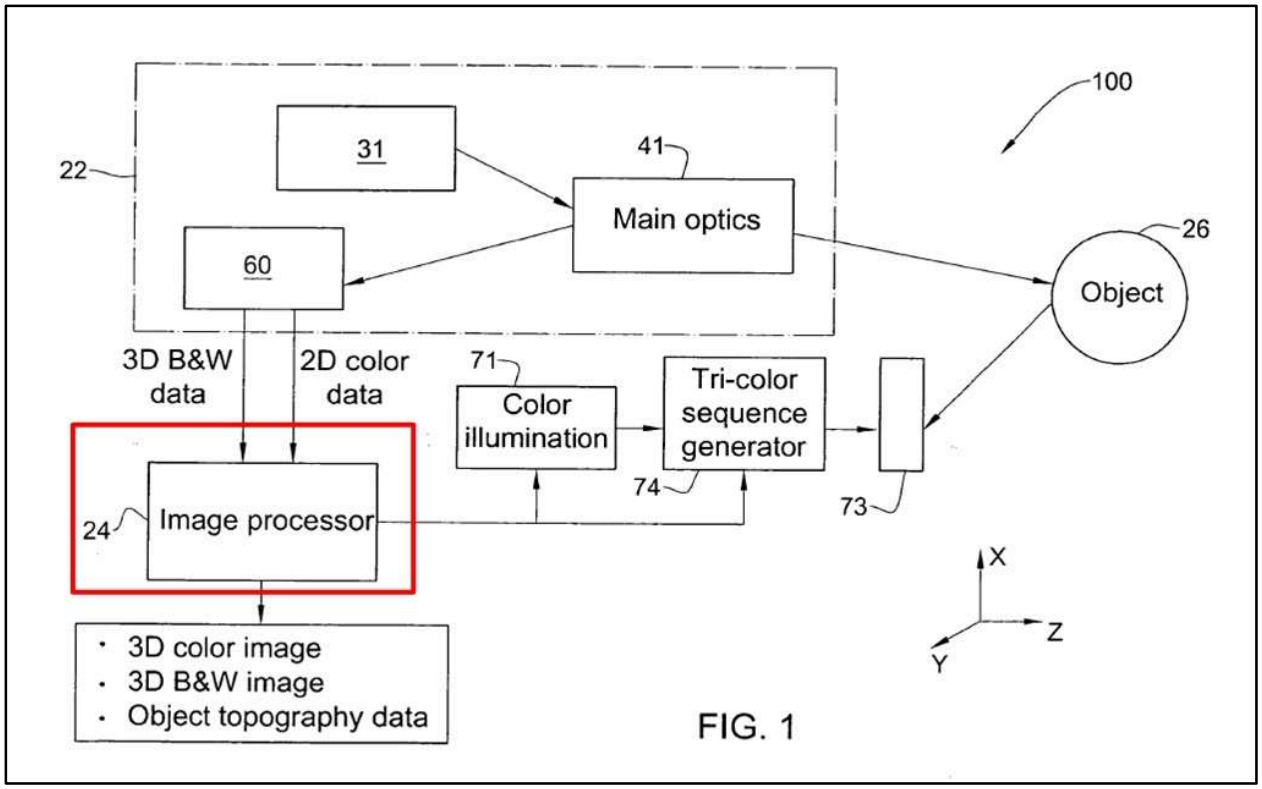

Id., FIG. 1 (annotated).

Babayoff explains that the ***processor 24***, also called the ***processing unit 24***, controls the tri-color sequence generator 74 to provide the three different colored illuminations of the object 26. *Id*., [0145]. Babayoff also explains that the processor 24 uses the CCD camera to grab the images for processing by the

processor 24. *Id*., [0141]. Babayoff further explains that the processor 24 combines the three differently colored monochromatic images to provide a full color image of the surface of the object 26. *Id*., [0130].

Babayoff discloses that the processor 24 determines the depth Z values for each (X, Y) point illuminated on the object 26 based on the plurality of 2D images. Ex. 1005, [0011]-[0015], [0129]-[0131], [0142]-[0143], FIGS. 1, 4B. In the combination of Babayoff with Zhang, the processor 24 of Babayoff would use the projection defocus method described in Zhang to determine the Z or depth coordinate for each (X, Y) position based on plurality of 2D images and knowledge of the time-varying illumination pattern. Ex. 1006, pp. 907-910; Ex. 1002, ¶95. Babayoff discloses that the processor 24 provides the entity E that comprises the array of (X, Y, Z) points and is a 3D geometry of the surface topology of the object 26. Ex. 1005, [0129], [0131], [0143], [0183]. Babayoff further discloses that a modem 88 is used to transmit the determined 3D surface topology data. *Id*., [0180]. Babayoff does not explicitly disclose that the ***processor 24*** is ***local*** on the intraoral scanner or that the transmission by the modem 88 is wireless.

Knighton, however, performs similar processing as Babayoff and Zhang—determining depth values based on a plurality of 2D images and producing a 3D geometry representation of the surface of the object. Ex. 1007, [0024]-[0025],

[0029], [0033], [0038]-[0041], [0045], [0049], [0052], [0054], [0093], FIGS. 1, 3, 4. Knighton further teaches that the processing can be performed by the ***processor 301*** that is ***local*** to the hand-held scanning device, and that the transmission of the data can be performed ***wirelessly*** using the communications device of the hand-held scanning device. *Id*.

In particular, Knighton teaches that the processing to determine the 3D geometry can be performed ***local*** to the hand-held scanning device using the ***processor 301*** that is ***internal*** to the hand-held scanning device. *Id*., [0025], [0029], [0049], [0054], [0093], FIG. 3. Knighton uses the 2D images to produce a component depth map with 3D information, and the component depth map is then meshed to create the 3D model of the surface of the object. *Id*., [0052], [0054], [0094]. Knighton explains that the processing to generate the 3D model data can be done ***locally*** on the hand-held scanning device and that the transmission of the data from the hand-held scanning device can be done wirelessly using a wireless communications device. *Id*., [0033], [0045], [0049], [0051], [0054], [0093]. Knighton explains that the scanning device may store raw data, intermediate data, or processed data. *Id*., [0093]. This allows for the hand-held scanning device in Knighton to wirelessly transmit the ***processed 3D model data instead of the raw data***. *Id*., [0045], [0049], [0051], [0093]; Ex. 1002, ¶97. Knighton explains that rather than offloading ***all*** the captured data to a host processor, the processing can

be performed ***locally*** to the hand-held scanning device so that it would ***not be necessary*** to transmit the ***raw*** data. Ex. 1007, [0049], [0051].

It would have been obvious to a POSA to include the ***processor 24*** in the device of Babayoff to perform the processing for the 3D geometry ***locally*** on the hand-held device in Babyoff as is done with the ***processor 301*** in Knighton because it would ***reduce*** the amount of data that needs to be transmitted, and it would have also been obvious to use wireless transmission for the data for the 3D geometry in Babayoff as is done in Knighton because it would allow for the hand-held device to be wireless and easier to move around, and Babayoff and Zhang are concerned with generating the 3D representation of an object just as is Knighton. Ex. 1002, ¶98. A POSA would have expected the modification of the hand-held scanner in Babyoff to be successful because the hand-held scanning device in Knighton is used for the same purpose and already shows how to do the local processing with the internal processor. *Id*.

[f][1] a hardware processor … configured to: selectively switch a color of the probe light to illuminate the object with different colors at different times; and

Babayoff in combination with Knighton satisfies these limitations of claim 1. Ex. 1002, ¶¶99-101. Babayoff teaches to use a tri-color sequence generator 74 to selectively switch among three differently-colored illumination radiations to illuminate the object 26 with different colors at different times. Ex. 1005, [0044],

[0063]-[0064], [0079], [0130]-[0131], [0145]-[0151], [0155]-[0157], FIG. 1. Babayoff explains that the ***processor 24***, also called the processing unit 24, which is a ***hardware processor*** controls the tri-color sequence generator 74 to provide the ***three different colored illuminations*** of the object 26. *Id*., [0145]. As discussed above, in the combination, the ***processor 24*** would be included in the hand-held scanning device as is the processor 301 in Knighton.

FIG. 1 of Babayoff is annotated below in red to highlight the tri-color light sources 71 and the tri-color sequence generator 74:

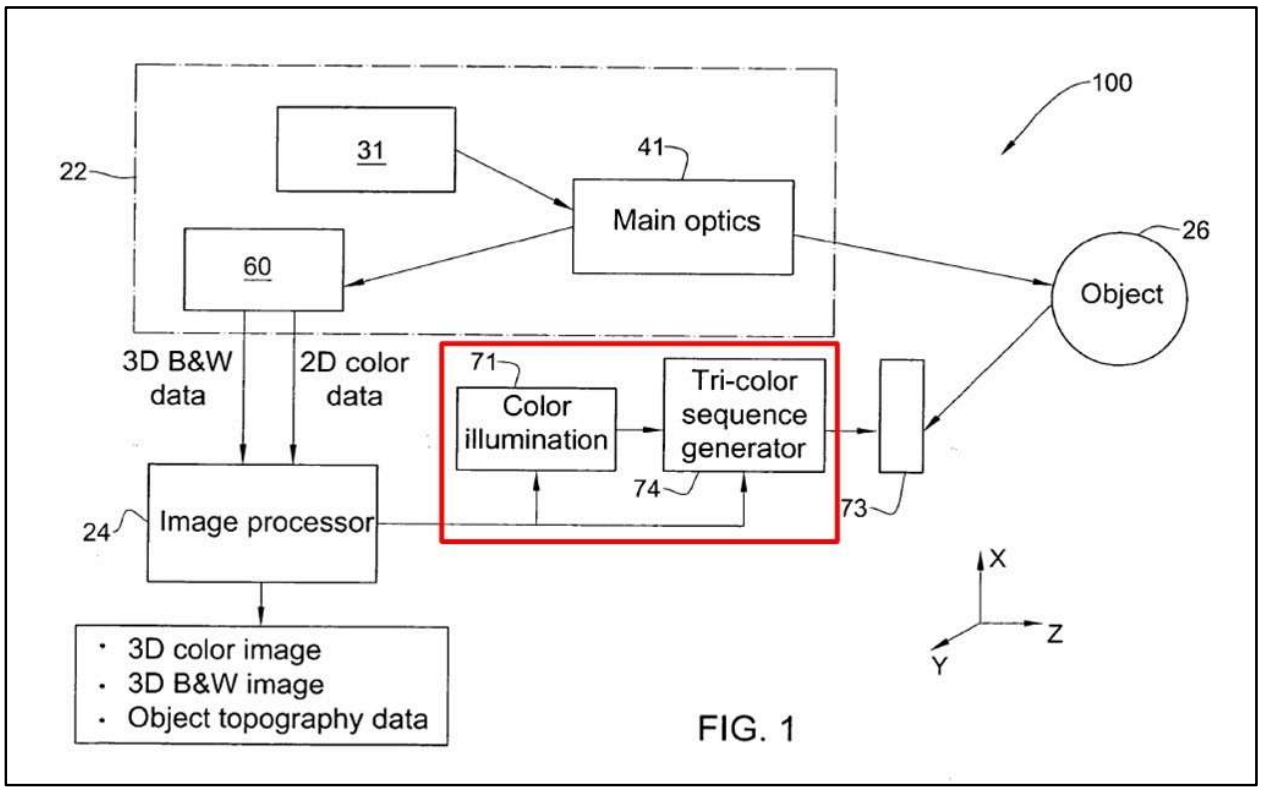

Id., FIG. 1 (annotated).

Babayoff explains that the tri-color light sources 71 are one or more light

sources that provide illumination to the object 26 in a plurality of different colors such as red, green, and blue. *Id*., [0145]. The tri-color sequence generator 74 is ***controlled by the processor 24*** to provide the ***three-color illuminations*** in a predetermined sequence. *Id*. [0130], [0145]. FIGS. 5A and 5C of Babayoff show exemplary locations of tri-color LED's 77 for providing the light in the different colors. *Id*., FIGS. [0146], 5A, 5C. FIG. 8 similarly shows another exemplary location for the tri-color light sources 377. *Id*., [0157], FIGS. 8, 9.

[f][2] a hardware processor … configured to … record images of the object with the different colors by recording different images by the at least one camera at the different times.

Babayoff in combination with Knighton satisfies these limitations of claim 1. Ex. 1002, ¶102. Babayoff teaches to illuminate the object 26 sequentially with the ***three different colored lights*** such as red, green, and blue, and to ***capture a monochromatic image corresponding to each color*** via the detection optics 60 that includes the ***camera*** such as the ***CCD 68 camera***. Ex. 1005, [0044]-[0045], [0079], [0092], [0130], [0145], FIGS. 1, 4A, 8. Babayoff also explains that the ***processor 24***, which is a ***hardware processor***, uses the ***CCD camera*** to grab the images for processing by the processor 24. *Id*., [0044]-[0045], [0063], [0141], [0145]. Babayoff, therefore, teaches to use the ***processor 24*** to control the recording of different images by the camera at the different times, which are the times at which each of the colors illuminate the object 26, and thereby how to

record images of the object 26 with the different colors. *Id*. As discussed above, in the combination, the ***processor 24*** would be included in the hand-held scanning device as is the processor 301 in Knighton.

3. Claim 2

The handheld intraoral scanner according to claim 1, wherein the light source further comprises at least three monochromatic light sources configured to provide the different colors.

Babayoff discloses this limitation of claim 2. Ex. 1002, ¶103. Babayoff discloses that the different colors can be provided by LEDs, and states that each LED can provide illumination in one of at least three colors, such that some of the LEDs provide a blue illumination, while other LEDs provide green illumination, and while yet other LEDs provide red illumination. Ex. 1005, [0044], [0048], [0057], [0145], [0149], [0157].

4. Claim 3

The handheld intraoral scanner according to claim 2, wherein for the selectively switch the color of the probe light, the hardware processor is further configured to selectively switch the color of the probe light by switching on and off the at least three monochromatic light sources.

Babayoff discloses this limitation of claim 3. Ex. 1002, ¶104. Babayoff explains that the processor 24, also called the processing unit 24, controls the tri-color sequence generator 74 to provide the three different colored illuminations of the object 26. Ex. 1005, [0145]. The tri-color sequence generator 74 is controlled

by the processor 24 to selectively switch the color of the probe light by switching on and off the LEDs, which are the at least three monochromatic light sources. *Id*., [0044]-[0045], [0048], [0057], [0063]-[0064], [0079], [0130], [0145], [0149], [0157]; Ex. 1002, ¶104.

5. Claim 4

The handheld intraoral scanner according to claim 1, wherein the optical system is substantially achromatic.

Babayoff discloses this limitation of claim 4. Ex. 1002, ¶105. The optical system in Babayoff includes at least part of the main optics 41, such as the confocal optics 42 and the relay optics 44, which form an optical path. Ex. 1005, [0137]-[0139], FIGS. 4A, 8. The device in Babayoff allows for illuminating an object sequentially with each of three different colored lights such as red, green, and blue, and then capturing a monochromatic image corresponding to each color based on light returned through the optical system. *Id*., [0145], FIG. 4A. The optical system in Babayoff, therefore, transmits light without separating it into constituent colors, which means that the optical system in Babayoff is achromatic. Ex. 1002, ¶105.

6. Claim 5

The handheld intraoral scanner according to claim 1, wherein the optical system is configured to direct the probe light towards the object in a direction substantially parallel with the longitudinal axis of the tip, and wherein the tip further comprises a single reflective mirror that is configured to reflect the probe light towards the object.

Babayoff in combination with Zhang discloses the limitations of claim 5. Ex. 1002, ¶106. As discussed *supra*, Babayoff in combination with Zhang provides the probe light. The tip is part of the endoscopic probing member 46 of Babayoff. Ex. 1005, [0138], FIGS. 4A. As shown in FIG. 4A of Babayoff, the probe light, which would be on the path of the incident light beams 36, is directed towards the object 26 in a direction substantially parallel with the longitudinal axis of the endoscopic probing member 46. *Id*., [0135], [0138], FIG. 4A. The probe light is then further reflected towards the object 26 by a single reflective mirror located in the endoscopic probing member 46 as described in paragraph [0138] of Babayoff and shown by FIG. 4A. *Id*., [0138], FIG. 4A. Babayoff also shows an example of the endoscope in the form of a probing member 90 in FIG. 5B in which the light rays 99 travel down the probing member and bounce on the mirror 95 such that they are reflected out through the sensing face 97. *Id*., [0146], FIG. 5B.

7. Claim 6

The handheld intraoral scanner according to claim 1, wherein the hardware processor is further configured to: process raw 3D data into data for the 3D geometry, wherein the raw 3D data is based on the plurality of 2D images; and transmit, via a wireless connection, the processed data for the 3D geometry.

Babayoff in combination with Zhang and Knighton satisfies these limitations of claim 6. Ex. 1002, ¶¶107-110. Babayoff discloses that the processor 24 determines the depth Z values for each (X, Y) point illuminated on the object 26 based on the plurality of 2D images. Ex. 1005, [0011]-[0015], [0129]-[0131], [0142]-[0143], FIGS. 1, 4B. In the combination of Babayoff with Zhang, the processor 24 of Babayoff would use the projection defocus method described in Zhang to determine the Z or depth coordinate for each (X, Y) position based on plurality of 2D images and knowledge of the time-varying illumination pattern. Ex. 1006, pp. 907-910; Ex. 1002, ¶107. Babayoff discloses that the processor 24 provides the entity E that comprises the array of (X, Y, Z) points and is a 3D geometry of the surface topology of the object 26. Ex. 1005, [0129], [0131], [0143], [0183]. Babayoff further discloses that a modem 88 is used to transmit the determined 3D surface topology data. *Id.*, [0180]. Babayoff does not explicitly disclose that the processor 24 is local on the intraoral scanner or that the transmission by the modem 88 is wireless.

Knighton, however, performs similar processing as Babayoff and Zhang—

determining depth values based on a plurality of 2D images and producing a 3D geometry representation of the surface of the object. Ex. 1007, [0024]-[0025], [0029], [0033], [0038]-[0041], [0045], [0049], [0052], [0054], [0093], FIGS. 1, 3, 4. Knighton further teaches that the processing can be performed by the processor 301 that is local to the hand-held scanning device, and that the transmission of the data can be performed wirelessly using the communications device 317 and the antenna 319 of the hand-held scanning device. *Id*.

In particular, Knighton teaches that the processing to determine the 3D geometry can be performed local to the hand-held scanning device using the processor 301 that is internal to the hand-held scanning device. *Id*., [0025], [0029], [0049], [0054], [0093], FIG. 3. Knighton uses the 2D images to produce a component depth map with 3D information, and the component depth map is then meshed to create the 3D model of the surface of the object. *Id*., [0052], [0054], [0094]. Knighton explains that the processing to generate the 3D model data can be done locally on the hand-held scanning device and that the transmission of the data from the hand-held scanning device can be done wirelessly using a wireless communications device. *Id*., [0033], [0045], [0049], [0051], [0054], [0093]. Knighton explains that the scanning device may store raw data, intermediate data, or processed data. *Id*., [0093]. This allows for the hand-held scanning device in Knighton to wirelessly transmit the processed 3D model data instead of the raw

data. *Id*., [0045], [0049], [0051], [0093]; Ex. 1002, ¶109. Knighton explains that rather than offloading all the captured data to a host processor, the processing can be performed locally to the hand-held scanning device so that it would not be necessary to transmit the raw data. Ex. 1007, [0049], [0051].

It would have been obvious to a POSA to perform the processing for the 3D geometry as taught by Zhang locally on the hand-held device in Babyoff as is done in Knighton because it would reduce the amount of data that needs to be transmitted, and it would have also been obvious to use wireless transmission for the data for the 3D geometry in Babayoff as is done in Knighton because it would allow for the hand-held device to be wireless and easier to move around, and Babayoff and Zhang are concerned with generating the 3D representation of an object just as is Knighton. Ex. 1002, ¶110. A POSA would have expected the modification of the hand-held scanner in Babyoff to be successful because the hand-held scanning device in Knighton is used for the same purpose and already shows how to do the local processing and wireless transmission. *Id*.

8. Claim 7

The handheld intraoral scanner according to claim 1, wherein the hardware processor is further configured to: process raw 3D data into data for the 3D geometry, wherein the raw 3D data is based on the plurality of 2D images; and transmit, via a wireless connection, the data for the 3D geometry at a reduced data rate in comparison with transmission of the raw 3D data.

Claim 7 of the ’667 patent is the same as claim 6 of the ’667 patent, except it

changes the recitation of "the processed data for the 3D geometry" to "the data for the 3D geometry at a reduced data rate in comparison with transmission of the raw 3D data" in the claim language. Babayoff in combination with Zhang and Knighton satisfies these limitations of claim 7, therefore, for the same reasons provided above with reference to claim 6. Ex. 1002, ¶111.

Regarding the added limitation in claim 7 of "the data for the 3D geometry at a reduced data rate in comparison with transmission of the raw 3D data," Babayoff in combination with Zhang and Knighton also satisfies this limitation of claim 7. *Id*., ¶¶112-115. Knighton notes that it is possible to perform the processing to create the 3D representation of the object either externally from the scanning device, internally to the scanning device, or partially externally and internally. Ex. 1007, [0093].

In the case where all the processing is done externally in Knighton, all the captured 2D images are transmitted to an external host processor for further processing. *Id*., [0049]. In the case where all the processing is performed internally in Knighton, the internal processor to the scanning device would perform all the processing including creating the depth map or the 3D model locally on the scanning device from the captured 2D images, and then the finished 3D geometry would be transmitted from the scanning device. Ex. 1007, [0049], [0054], [0093]; Ex. 1002, ¶113.

Knighton explains that a composite image generated from the 2D images is a much smaller data set than the total pixels captured. Ex. 1007, [0052]. The depth map and 3D coordinates for the 3D geometry would also represent a smaller data set. *Id*., [0052]; Ex. 1002, ¶114. By performing processing locally at the scanning device in Knighton, therefore, the amount of data that would need to be wirelessly transmitted from the scanning device is reduced, which allows for a reduced data rate for transmission of the data resulting from the processing as compared to the raw data before processing. Ex. 1007, [0033], [0045], [0049], [0051]-[0054], [0093]; Ex. 1002, ¶114.

It would have been obvious to a POSA to perform the processing for the 3D geometry as taught by Zhang locally on the hand-held device in Babyoff as is done in Knighton because it would reduce the amount of data that needs to be transmitted and, thus, the required data rate for transmission, and it would have also been obvious to use wireless transmission for the data for the 3D geometry in Babayoff as is done in Knighton because it would allow for the hand-held device to be wireless and easier to move around, and both Babayoff and Zhang are concerned with generating the 3D representation of an object just as is Knighton. Ex. 1002, ¶115.

9. Claim 8

The handheld intraoral scanner according to claim 6, wherein the hardware processor is further configured to process the raw 3D data into data for the 3D geometry in real time.

Babayoff in combination with Zhang and Knighton satisfies this limitation of claim 8. Ex. 1002, ¶116. As discussed above for claim 6, it would have been obvious to a POSA to have local processing for the device of Babayoff as is done in Knighton. Knighton further discloses that the calculation of the depth map and the three dimensional representation may be accomplished during a scan of the target object. Ex. 1007, [0081]. By performing the processing to calculate the depth map and 3D representation "during" a scan of the target object, the processing is being done in real time. *Id.*; Ex. 1002, ¶116. Also, as discussed above, the processing in Knighton can be done locally on the hand-held scanning device. Ex. 1007, [0049], [0054], [0093]. Zhang explains that the determination of the 3D data could be done using a pre-computed lookup table. Ex. 1006, p. 910. It would have been obvious to a POSA to employ the local processing in real time as taught by Knighton in the hand-held device of Babayoff using the pre-computed lookup table of Zhang because it would have allowed for fast processing of the data so that the results would be available quicker and would allow for using the time during scanning to also process data. Ex. 1002, ¶116.

10. Claim 13

The handheld intraoral scanner according to claim 1, wherein the hardware processor is further configured to: output data from the one or more motion sensors for stitching and/or registering partial scans to one another.

Babayoff in combination with Knighton satisfies the limitations of claim 13. Ex. 1002, ¶¶117-118. Babayoff discloses that surface topologies may be determined for two different surfaces of a structure, such as a teeth segment, and then the surface topologies may be combined to obtain topological data representative of the structure. Ex. 1005, [0093]. Knighton similarly discloses that multiple three dimensional representations and texture maps may overlap one another and may be continuously pieced together. Ex. 1007, [0054], [0080]. Indeed, Knighton states that depth maps or texture maps with adjoining or overlapping surface areas may be combined in a three dimensional representation, just as is done in Babyoff. *Id*., [0075]; Ex. 1005, [0093]. Knighton further explains that tracking information from position tracking or detection sensors may be used to aid that three dimensional representation and texture map generation. Ex. 1007, [0080], [0082]. Knighton explains that the position detection or tracking device may generate positions or movement output data that indicate the position or movement of the device that may be used by software executing on the processor 301 to generate the three dimensional representation of a target. *Id*., [0044].

It would have been obvious to a POSA, therefore, to include the position

tracking or detection sensors of Knighton on the device of Babayoff to obtain position data and to configure the processor as is done in Knighton to output data from the one or more position detection sensors for stitching and/or registering partial scans to one another in order to be used to aid in generating the three dimensional representation of the structure as is done by Knighton to improve the combining of three dimensional data for surfaces of the structure. Ex. 1002, ¶118. A POSA would have expected such a combination to work for its intended purpose because Knighton already shows how to use the position tracking or detection sensors on a hand-held scanning device with the processor for exactly such a purpose. *Id*.

11. Claim 14

[preamble] A handheld intraoral scanner for determining the 3D geometry and color of at least a part of the surface of an object in an oral cavity, the intraoral scanner comprising:

The preamble of claim 14 is the same as the preamble of claim 1 and, therefore, is obvious for the same reasons provided above with respect to the preamble of claim 1. Ex. 1002, ¶119.

[a] a tip configured to be inserted into the oral cavity;

Limitation [a] of claim 14 is the same as limitation [a] of claim 1 and, therefore, is obvious for the same reasons provided above with respect to limitation [a] of claim 1. Ex. 1002, ¶120.

[b] at least one camera accommodating an array of sensor elements;

Limitation [b] of claim 14 is the same as limitation [b] of claim 1 and, therefore, is obvious for the same reasons provided above with respect to limitation [b] of claim 1. Ex. 1002, ¶121.

[c] a pattern generator configured to generate, using a light source, a probe light with a plurality of configurations in the form of a time-varying illumination pattern;

Limitation [c] of claim 14 is the same as limitation [c] of claim 1 and, therefore, is obvious for the same reasons provided above with respect to limitation [c] of claim 1. Ex. 1002, ¶122.

[d] an optical system configured to transmit the probe light, via the tip, towards the object along an optical path thereby illuminating at least a part of the object with the time-varying illumination pattern, and to transmit at least a part of the light returned from the object to the at least one camera to form a plurality of 2D images, wherein the 3D geometry is determined based on the plurality of 2D images and the time-varying illumination pattern, wherein the intraoral scanner is wireless; and

Limitation [d] of claim 14 is the same as limitation [d] of claim 1 along with the wireless limitation in limitation [e] of claim 1 and, therefore, is obvious for the same reasons provided above with respect to limitation [d] and the wireless limitation in limitation [e] of claim 1. Ex. 1002, ¶123.

[e] a hardware processor, located within the wireless intraoral scanner, configured to:

Limitation [e] of claim 14 is the same as limitation [f] of claim 1 and, therefore, is obvious for the same reasons provided above with respect to limitation [f] of claim 1. Ex. 1002, ¶124.

[e][1] selectively switch a color of the probe light to illuminate the object with different colors at different times;

Limitation [e][1] of claim 14 is the same as limitation [f][1] of claim 1 and, therefore, is obvious for the same reasons provided above with respect to limitation [f][1] of claim 1. Ex. 1002, ¶125.

[e][2] record images of the object with the different colors by recording different images by the at least one camera at the different times;

Limitation [e][2] of claim 14 is the same as limitation [f][2] of claim 1 and, therefore, is obvious for the same reasons provided above with respect to limitation [f][2] of claim 1. Ex. 1002, ¶126.

[e][3] process raw 3D data into data for the 3D geometry, wherein the raw 3D data is based on the plurality of 2D images; and

Limitation [e][3] of claim 14 is the same as the process limitation in each of claims 6 and 7 and, therefore, is obvious for the same reasons provided above with respect to that limitation in claims 6 and 7. Ex. 1002, ¶127.

[e][4] transmit, via a wireless connection, the data for the 3D geometry at a reduced data rate in comparison with transmission of the raw 3D data.

Limitation [e][4] of claim 14 is the same as the transmit limitation in claim 7 and, therefore, is obvious for the same reasons provided above with respect to that limitation in claim 7. Ex. 1002, ¶128.

12. Claim 15

The handheld intraoral scanner of claim 14, wherein the hardware processor is further configured to process the raw 3D data into data for the 3D geometry in real time.

The limitation of claim 15 is the same as the limitation of claim 8 and, therefore, is obvious for the same reasons provided above with respect to the limitation of claim 8. Ex. 1002, ¶129.

13. Claim 16

The handheld intraoral scanner of claim 14, further comprising: one or more motion sensors located on the intraoral scanner to measure three-dimensional motion of the intraoral scanner.

The limitation of claim 16 is the same as the one or more motion sensors limitation in limitation [e] of claim 1 and, therefore, is obvious for the same reasons provided above with respect to that limitation of claim 1. Ex. 1002, ¶130.

14. Claim 18

The handheld intraoral scanner according to claim 16, wherein the hardware processor is further configured to: output data from the one or more motion sensors for stitching and/or registering partial scans to one another.

The limitation of claim 18 is the same as the limitation of claim 13 and, therefore, is obvious for the same reasons provided above with respect to the limitation of claim 13. Ex. 1002, ¶131.

15. Claim 19

The handheld intraoral scanner according to claim 14, wherein the light source further comprises at least three monochromatic light sources configured to provide the different colors.

The limitation of claim 19 is the same as the limitation of claim 2 and, therefore, is obvious for the same reasons provided above with respect to the limitation of claim 2. Ex. 1002, ¶132.

16. Claim 20

The handheld intraoral scanner according to claim 14, wherein the hardware processor is further configured to selectively switch the color of the probe light by switching on and off the at least three monochromatic light sources.

The limitation of claim 20 is the same as the limitation of claim 3 and, therefore, is obvious for the same reasons provided above with respect to the limitation of claim 3. Ex. 1002, ¶133.

17. Claim 21

The handheld intraoral scanner according to claim 14, wherein the optical system is substantially achromatic.

The limitation of claim 21 is the same as the limitation of claim 4 and, therefore, is obvious for the same reasons provided above with respect to the limitation of claim 4. Ex. 1002, ¶134.

18. Claim 22

The handheld intraoral scanner according to claim 14, wherein the optical system is further configured to direct the probe light towards the object in a direction substantially parallel with the longitudinal axis of the tip, and wherein the tip further comprises a single reflective mirror that is configured to reflect the probe light towards the object.

The limitation of claim 22 is the same as the limitation of claim 5 and, therefore, is obvious for the same reasons provided above with respect to the limitation of claim 5. Ex. 1002, ¶135.

19. Claim 26

[preamble] A handheld intraoral scanner for determining the 3D geometry and color of at least a part of the surface of an object in an oral cavity, the intraoral scanner comprising:

The preamble of claim 26 is the same as the preamble of claim 1 and, therefore, is obvious for the same reasons provided above with respect to the preamble of claim 1. Ex. 1002, ¶136.

[a] a tip configured to be inserted into the oral cavity;

Limitation [a] of claim 26 is the same as limitation [a] of claim 1 and,

therefore, is obvious for the same reasons provided above with respect to limitation [a] of claim 1. Ex. 1002, ¶137.

[b] at least one camera accommodating an array of sensor elements;

Limitation [b] of claim 26 is the same as limitation [b] of claim 1 and, therefore, is obvious for the same reasons provided above with respect to limitation [b] of claim 1. Ex. 1002, ¶138.

[c] a pattern generator configured to generate, using a light source, a probe light with a plurality of configurations in the form of a time-varying illumination pattern;

Limitation [c] of claim 26 is the same as limitation [c] of claim 1 and, therefore, is obvious for the same reasons provided above with respect to limitation [c] of claim 1. Ex. 1002, ¶139.

[d] an optical system configured to transmit the probe light, via the tip, towards the object along an optical path thereby illuminating at least a part of the object with the time-varying illumination pattern, and to transmit at least a part of the light returned from the object to the at least one camera to form a plurality of 2D images, wherein the 3D geometry is determined based on the plurality of 2D images and the time-varying illumination pattern;

Limitation [d] of claim 26 is the same as limitation [d] of claim 1 and, therefore, is obvious for the same reasons provided above with respect to limitation [d] of claim 1. Ex. 1002, ¶140.

[e] one or more motion sensors located on the intraoral scanner to measure three-dimensional motion of the intraoral scanner; and

Limitation [e] of claim 26 is the same as the one or more motion sensors limitation of limitation [e] of claim 1 and, therefore, is obvious for the same reasons provided above with respect to that limitation of claim 1. Ex. 1002, ¶141.

[f] a hardware processor configured to:

Limitation [f] of claim 26 is the same as the hardware processor limitation of limitation [f] of claim 1 and, therefore, is obvious for the same reasons provided above with respect to that limitation of claim 1. Ex. 1002, ¶142.

[f][1] selectively switch a color of the probe light to illuminate the object with different colors at different times; and

Limitation [f][1] of claim 26 is the same as limitation [f][1] of claim 1 and, therefore, is obvious for the same reasons provided above with respect to limitation [f][1] of claim 1. Ex. 1002, ¶143.

[f][2] record images of the object with different colors by recording different images by the at least one camera at the different times.

Limitation [f][2] of claim 26 is the same as limitation [f][2] of claim 1 and, therefore, is obvious for the same reasons provided above with respect to limitation [f][2] of claim 1. Ex. 1002, ¶144.

20. Claim 28

The handheld intraoral scanner according to claim 26, wherein the hardware processor is further configured to: output data from the one or more motion sensors for stitching and/or registering partial scans to one another.

The limitation of claim 28 is the same as the limitation of claim 13 and, therefore, is obvious for the same reasons provided above with respect to the limitation of claim 13. Ex. 1002, ¶145.

21. Claim 29

The handheld intraoral scanner according to claim 26, wherein the intraoral scanner is wireless and the hardware processor is further configured to: process raw 3D data into data for the 3D geometry, wherein the raw 3D data is based on the plurality of 2D images; and transmit, via a wireless connection, the data for the 3D geometry at a reduced data rate in comparison with transmission of the raw 3D data.

The limitations of claim 29 are the same as the wireless limitation in limitation [e] of claim 1 along with the limitations of claim 7 and, therefore, are obvious for the same reasons provided above with respect to the wireless limitation in limitation [e] of claim 1 and with respect to the limitations of claim 7. Ex. 1002, ¶146.

B. Ground 2: Claims 12, 17, and 27 Are Obvious Over Babayoff and Zhang and Knighton and Serra

1. Claim 12

The handheld intraoral scanner according to claim 1, wherein the hardware processor is further configured to: output data from the one or more motion sensors for remotely controlling an image displayed on a display device based on acquired scan data.

The limitations of claim 1 are disclosed by the combination of Babayoff, Zhang, and Knighton as discussed under Ground 1. Babayoff in combination with Knighton and Serra satisfies the limitation of claim 12. Ex. 1002, ¶¶147-148. Babayoff in combination with Knighton discloses the handheld intraoral scanner with the one or more motion sensors as discussed above under Ground 1 for limitation [e] of claim 1. In the context of a handheld scanner, Serra discloses a handheld 3D scanning device that can ***control display parameters*** to ***interactively manipulate acquired 3D data*** in an ***interactive visualization mode***. Ex. 1008, [0053]-[0054]. Just as in Knighton, the device of Serra includes a ***3D tracker***, one example of which is a ***3D sensor 720***, for ***tracking the 3D position of the device***. *Id*., [0074]. The ***movement of the device*** in Serra can be ***used to rotate a scene on a display of acquired 3D data***. *Id*., [0054]. Serra explains the tracking information for the device from the ***3D sensor*** can be ***used to rotate the entire scene*** (effectively changing the viewpoint of the user over the entire 3D scene) on the display. *Id*. Serra also teaches ***ergonomic advantages*** from permitting a scanning

process and an examination or display control process with the ***same*** device because a user is always holding the device, which ***makes it convenient*** to perform the ***scanning and display control*** with the ***same*** device. *Id*., [0053].

It would have been obvious to a POSA to modify the combined device of Babayoff and Knighton to configure the hardware processor to output data from the one or more motion sensors for remotely controlling an image displayed on a display device based on acquired scan data, such as is done in Serra, because it would provide ***ergonomic advantages*** by permitting a scanning process and an examination or display control process with the ***same*** device because a user is always holding the device, which would make it ***convenient*** to perform the scanning and display control with the same device as explained by Serra. Ex. 1002, ¶148; Ex. 1008, [0053]-[0054], [0074]. A POSA would have had an expectation of success with the combination because it uses the motion sensor data from the motion sensor on the scanning device to control the display of the acquired data, which is exactly what Serra taught to do to obtain the noted ***ergonomic advantages***. Ex. 1002, ¶148.

2. Claim 17

The handheld intraoral scanner according to claim 16 wherein the hardware processor is further configured to: output data from the one or more motion sensors for remotely controlling an image displayed on a display device based on acquired scan data.

The limitation of claim 17 is the same as the limitation of claim 12 and,

therefore, is obvious for the same reasons provided above with respect to the limitation of claim 12. Ex. 1002, ¶149.

3. Claim 27

The handheld intraoral scanner according to claim 26, wherein the hardware processor is further configured to: output data from the one or more motion sensors for remotely controlling an image displayed on a display device based on acquired scan data.

The limitation of claim 27 is the same as the limitation of claim 12 and, therefore, is obvious for the same reasons provided above with respect to the limitation of claim 12. Ex. 1002, ¶150.

IX. MANDATORY NOTICES PURSUANT TO 37 C.F.R. § 42.8

A. Real Party-In-Interest (37 C.F.R. § 42.8(b)(1))

Pursuant to 37 C.F.R. § 42.8(b)(1), Petitioner certifies that DITC is the real party-in-interest in this matter. Petitioner also identifies an additional real party-in-interest, Carestream Dental LLC, which was the original defendant in related district court litigation (*3Shape A/S v. Carestream Dental LLC*, *see infra*) and which as of April 20, 2022 has no past or future liabilities associated with the claims, accused products, or associated business in that litigation.

B. Related Matters (37 C.F.R. § 42.8(b)(2))

Pursuant to 37 C.F.R. § 42.8(b)(2), Petitioner hereby states that the ’667 patent is a subject of civil action *3Shape A/S v. Carestream Dental LLC et al.*, Civil No. 1:22-cv-01829 (N.D. Ga.), which was transferred from the Western

District of Texas and was previously styled as *3Shape A/S v. Carestream Dental LLC*, Civil No. 6:21-cv-01110 (W.D. Tex.), filed October 26, 2021. The '667 patent is also a subject of civil action *3Shape A/S v. Medit Corporation*, Civil No. 6:22-cv-00443 (W.D. Tex.), filed May 2, 2022.

C. Counsel and Service Information (37 C.F.R. § 42.8(b)(3), 42.8(b)(4))

Pursuant to 37 C.F.R. §§ 42.8(b)(3) and 42.10(a), Petitioner provides the following counsel and service information. Pursuant to 37 C.F.R. § 42.10(b), a Power of Attorney accompanies this Petition.

LEAD COUNSEL	BACK-UP COUNSEL
John T. McKee (Reg. No. 65,926) johnmckee@quinnemanuel.com QUINN EMANUEL URQUHART & SULLIVAN, LLP 51 Madison Ave, 22nd Floor New York, New York 10010 Tel: (212) 849-7000 Fax: (212) 849-7100	James M. Glass (Reg. No. 46,729) jimglass@quinnemanuel.com QUINN EMANUEL URQUHART & SULLIVAN, LLP 51 Madison Avenue, 22nd Floor New York, NY 10010 Tel: (212) 849-7000 Fax: (212) 849-7100 Richard W. Erwine (Reg. No. 41,737) richarderwine@quinnemanuel.com QUINN EMANUEL URQUHART & SULLIVAN, LLP 51 Madison Avenue, 22nd Floor New York, NY 10010 Tel: (212) 849-7000 Fax: (212) 849-7100 Jeanne M. Gills (Reg. No. 44,458) jmgills@foley.com FOLEY & LARDNER LLP 321 N. Clark Street, Suite 2800 Chicago, IL 60654 Tel: (312) 832-4500 Fax: (312) 832-4700

D. Payment of Fees

The Office is authorized to charge fees for this Petition to Deposit Account No. 50-5708. Any additional fees that might be due are also authorized.

X. DISCRETIONARY ANALYSIS

In addition to the strong merits presented herein, Petitioner also hereby provides a *Sotera*-type stipulation and stipulates that if the PTAB institutes *inter partes*

review in relation to any petition filed by DITC with respect to the ’677 patent, the Petitioner will not pursue in the district court litigation any ground raised or that could have been reasonably raised in the instituted IPR with respect to the patent claim subject to the instituted IPR. This stipulation precludes discretionary denial under §314(a). *See* Director Vidal Memorandum, Interim Procedure for Discretionary Denials in AIA Post-Grant Proceedings with Parallel District Court Litigation, at 3-5, 7-8 (June 21, 2022).

Regarding §325(d), the ’677 patent has not previously been challenged at the PTAB. Of the references relied upon in the Grounds herein, Zhang was not considered by the Patent Office during prosecution. The consideration of the other references does not bar institution of this IPR under 35 U.S.C. § 325(d) because they were not considered in combination with Zhang. *Praxair Distrib., Inc. v. INO Therapeutics, LLC*, IPR2015-00889, Paper 14 at 9-10 (PTAB Sept. 22, 2015). Accordingly, discretionary denial under §325(d) and *General Plastic* is not warranted.

XI. CONCLUSION

Petitioner respectfully requests that Trial be instituted and that claims 1-8, 12-22, and 26-29 of the ’667 patent be canceled.

Respectfully submitted,

Dated: December 28, 2022

By: */s/ John T. McKee*
John T. McKee (Reg. No. 65,926)

Counsel for Petitioner

CERTIFICATE OF COMPLIANCE

Pursuant to 37 C.F.R. § 42.24(d), the undersigned certifies that the word count for the foregoing Corrected Petition for *Inter Partes* Review of U.S. Patent No. 11,368,667 totals 13,858 words, which complies with the 14,000 allowed under 37 CFR § 42.24(a)(1)(i). This word count does not include the items excluded by 37 C.F.R. § 42.24 as not counting towards the word limit.

Dated: December 28, 2022

By: */s/ John T. McKee*

John T. McKee
johnmckee@quinnemanuel.com
QUINN EMANUEL URQUHART & SULLIVAN, LLP
51 Madison Ave, 22nd Floor
New York, New York 10010
Tel: (212) 849-7000
Fax: (212) 849-7100

Counsel for Petitioner

CERTIFICATE OF SERVICE

The undersigned hereby certifies that a copy of the foregoing Corrected Petition for *Inter Partes* Review of U.S. Patent No. 11,368,667 together with all exhibits and other papers filed therewith was served on December 28, 2022 by Federal Express directed to the attorneys of record for the patent at the following address:

BUCHANAN, INGERSOLL & ROONEY PC
1737 KING STREET, SUITE 500
ALEXANDRIA VA 22314-2727

A courtesy copy is also provided to the Patent Owner's litigation attorneys by FedEx at the address below:

Kimberly E. Coghill
TROUTMAN PEPPER HAMILTON SANDERS LLP
401 9th Street, N.W., Suite 1000
Washington, DC 20004
Tel: 202.220.1246

Courtesy copies of the same documents were served electronically by email at the following addresses:

Ana Spone: ana.spone@troutman.com
Bryan J. Cannon: bryan.cannon@troutman.com
Frank Liu: frank.liu@troutman.com
Gregory Len: gregory.len@troutman.com
Kimberly E. Coghill: kimberly.coghill@troutman.com
William D. Belanger: william.belanger@troutman.com
Puja Patel Lea: puja.lea@troutman.com

By: */s/ John T. McKee*
John T. McKee
johnmckee@quinnemanuel.com
QUINN EMANUEL URQUHART & SULLIVAN, LLP
51 Madison Ave, 22nd Floor
New York, New York 10010
Tel: (212) 849-7000
Fax: (212) 849-7100

Counsel for Petitioner