US006891953B1

(12) **United States Patent**
DeMello et al.

(10) **Patent No.: US 6,891,953 B1**
(45) **Date of Patent: May 10, 2005**

(54) **METHOD AND SYSTEM FOR BINDING ENHANCED SOFTWARE FEATURES TO A PERSONA**

(75) Inventors: **Marco A. DeMello**, Redmond, WA (US); **Leroy B. Keely**, Portola Valley, CA (US); **Frank D. Byrum**, Seattle, WA (US); **Yoram Yaacovi**, Redmond, WA (US); **Kathryn E. Hughes**, Redmond, WA (US)

(73) Assignee: **Microsoft Corporation**, Redmond, WA (US)

(*) Notice: Subject to any disclaimer, the term of this patent is extended or adjusted under 35 U.S.C. 154(b) by 935 days.

(21) Appl. No.: **09/604,541**

(22) Filed: **Jun. 27, 2000**

(51) **Int. Cl.**[7] **H04L 9/00**

(52) **U.S. Cl.** **380/277**; 380/259; 380/281; 380/282; 380/284; 380/285; 380/45; 713/156; 713/171

(58) **Field of Search** 380/259, 277, 380/281, 282, 284, 285, 45; 713/156, 171

(56) **References Cited**

U.S. PATENT DOCUMENTS

4,405,829 A	9/1983	Rivest et al.	178/22.1
4,827,508 A	5/1989	Shear	380/4
4,924,378 A	5/1990	Hershey et al.	364/200

(Continued)

FOREIGN PATENT DOCUMENTS

EP	0 778 512 A2	6/1997
EP	0 795 809 A2	9/1997
EP	0 843 449 A2	5/1998

(Continued)

OTHER PUBLICATIONS

Riley, M., et al. (Eds.), "Open eBook™ Publication Structure 1.0," http://www.openebook.org/specification.htm, Sep. 16, 2000, 1–77.

Jaeger, T., "Flexible Control of Downloaded Executable Content", *ACM Transactions on Information and System Security*, 1999, 2(2), 177–228.

Primary Examiner—Justin T. Darrow
Assistant Examiner—Kambiz Zand
(74) *Attorney, Agent, or Firm*—Woodcock Washburn LLP

(57) **ABSTRACT**

A server architecture for a digital rights management system that distributes and protects rights in content. The server architecture includes a retail site which sells content items to consumers, a fulfillment site which provides to consumers the content items sold by the retail site, and an activation site which enables consumer reading devices to use content items having an enhanced level of copy protection. Each retail site is equipped with a URL encryption object, which encrypts, according to a secret symmetric key shared between the retail site and the fulfillment site, information that is needed by the fulfillment site to process an order for content sold by the retail site. Upon selling a content item, the retail site transmits to the purchaser a web page having a link to a URL comprising the address of the fulfillment site and a parameter having the encrypted information. Upon following the link, the fulfillment site downloads the ordered content to the consumer, preparing the content if necessary in accordance with the type of security to be carried with the content. The fulfillment site includes an asynchronous fulfillment pipeline which logs information about processed transactions using a store-and-forward messaging service. The fulfillment site may be implemented as several server devices, each having a cache which stores frequently downloaded content items, in which case the asynchronous fulfillment pipeline may also be used to invalidate the cache if a change is made at one server that affects the cached content items. An activation site provides an activation certificate and a secure repository executable to consumer content-rendering devices which enables those content rendering devices to render content having an enhanced level of copy-resistance. The activation site "activates" client-reading devices in a way that binds them to a persona, and limits the number of devices that may be activated for a particular persona, or the rate at which such devices may be activated for a particular persona.

2 Claims, 10 Drawing Sheets

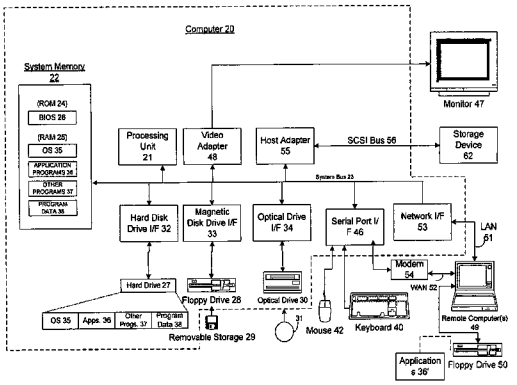

U.S. PATENT DOCUMENTS

4,977,594	A	12/1990	Shear	380/4
5,050,213	A	9/1991	Shear	380/25
5,191,573	A	3/1993	Hair	369/84
5,222,134	A	6/1993	Waite et al.	380/4
5,410,598	A	4/1995	Shear	380/4
5,509,070	A	4/1996	Schull	380/4
5,530,235	A	6/1996	Stefik et al.	235/492
5,625,693	A	4/1997	Rohatgi et al.	380/23
5,629,980	A	5/1997	Stefik et al.	380/4
5,634,012	A	5/1997	Stefik et al.	395/239
5,638,443	A	6/1997	Stefik et al.	380/4
5,654,746	A	8/1997	McMullan, Jr. et al.	348/6
5,666,411	A	9/1997	McCarty	380/4
5,675,734	A	10/1997	Hair	395/200.01
5,708,780	A	1/1998	Levergood et al.	395/200.12
5,715,403	A	2/1998	Stefik	395/244
5,724,425	A	3/1998	Chang et al.	380/25
5,734,823	A	3/1998	Saigh et al.	395/200.06
5,734,891	A	3/1998	Saigh	395/610
5,742,677	A	4/1998	Pinder et al.	380/242
5,784,609	A	7/1998	Kurihara	395/609
5,809,145	A	9/1998	Slik et al.	380/25
5,845,281	A	12/1998	Benson et al.	707/9
5,864,620	A	1/1999	Pettitt	380/4
5,883,955	A	3/1999	Ronning	380/4
5,892,900	A	4/1999	Ginter et al.	395/186
5,910,987	A	6/1999	Ginter et al.	380/24
5,915,019	A	6/1999	Ginter et al.	380/4
5,917,912	A	6/1999	Ginter et al.	380/24
5,920,861	A	7/1999	Hall et al.	707/9
5,933,498	A	8/1999	Schneck et al.	380/4
5,940,504	A	8/1999	Griswold	380/4
5,943,422	A	8/1999	Van Wie et al.	380/9
5,949,876	A	9/1999	Ginter et al.	380/4
5,970,475	A	10/1999	Barnes et al.	705/27
5,982,891	A	11/1999	Ginter et al.	380/4
5,983,273	A	11/1999	White et al.	709/229
5,991,402	A	11/1999	Jia et al.	380/9
5,999,622	A	12/1999	Yasukawa et al.	380/4
6,006,332	A	12/1999	Rabne et al.	713/201
6,021,492	A	2/2000	May	713/200
6,029,046	A	2/2000	Khan et al.	455/6.2
6,035,403	A	3/2000	Subbiah et al.	713/201
6,067,582	A	5/2000	Smith et al.	710/5
6,088,717	A *	7/2000	Reed et al.	709/201
6,199,053	B1	3/2001	Herbert et al.	705/76
6,226,618	B1	5/2001	Downs et al.	705/1
6,298,446	B1	10/2001	Schreiber et al.	713/201
6,331,865	B1	12/2001	Sachs et al.	345/776
6,385,596	B1	5/2002	Wiser et al.	705/51
6,425,017	B1	7/2002	Dievendorff et al.	709/315
6,606,604	B1	8/2003	Dutta	705/26
6,629,138	B1	9/2003	Lambert et al.	709/224
6,718,361	B1	4/2004	Basani et al.	709/201
2001/0011238	A1	8/2001	Eberhard et al.	705/27
2002/0002611	A1	1/2002	Vange	709/223
2002/0069265	A1	6/2002	Bountour et al.	709/219

FOREIGN PATENT DOCUMENTS

WO	WO 96/24092	8/1996
WO	WO 96/42041	12/1996
WO	WO 98/44402	10/1998
WO	WO 98/45768	10/1998
WO	WO 98/58306	12/1998
WO	WO 99/45491	9/1999
WO	WO 99/55055	12/1999
WO	WO 99/63416	12/1999
WO	WO 00/08909	2/2000
WO	WO 00/21239	4/2000
WO	WO 00/7576 A1	12/2000

* cited by examiner

FIG. 1

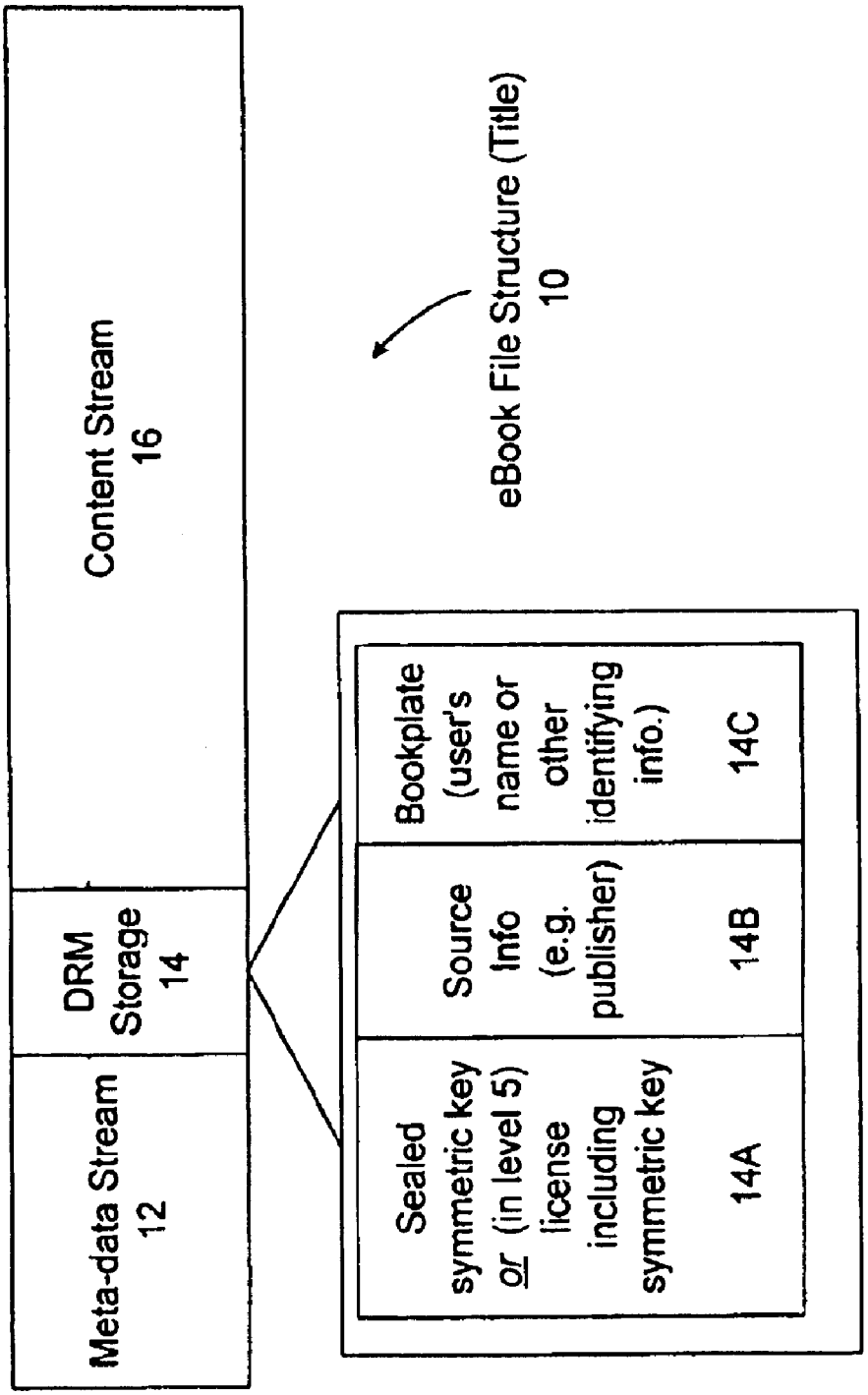
Meta-data Stream
12
DRM
Storage
14
Content Stream
16
Sealed
symmetric key
or (in level 5)
license
including
symmetric key
14A
Source
Info
(e.g.
publisher)
14B
Bookplate
(user's
name or
other
identifying
info.)
14C
eBook File Structure (Title)
10

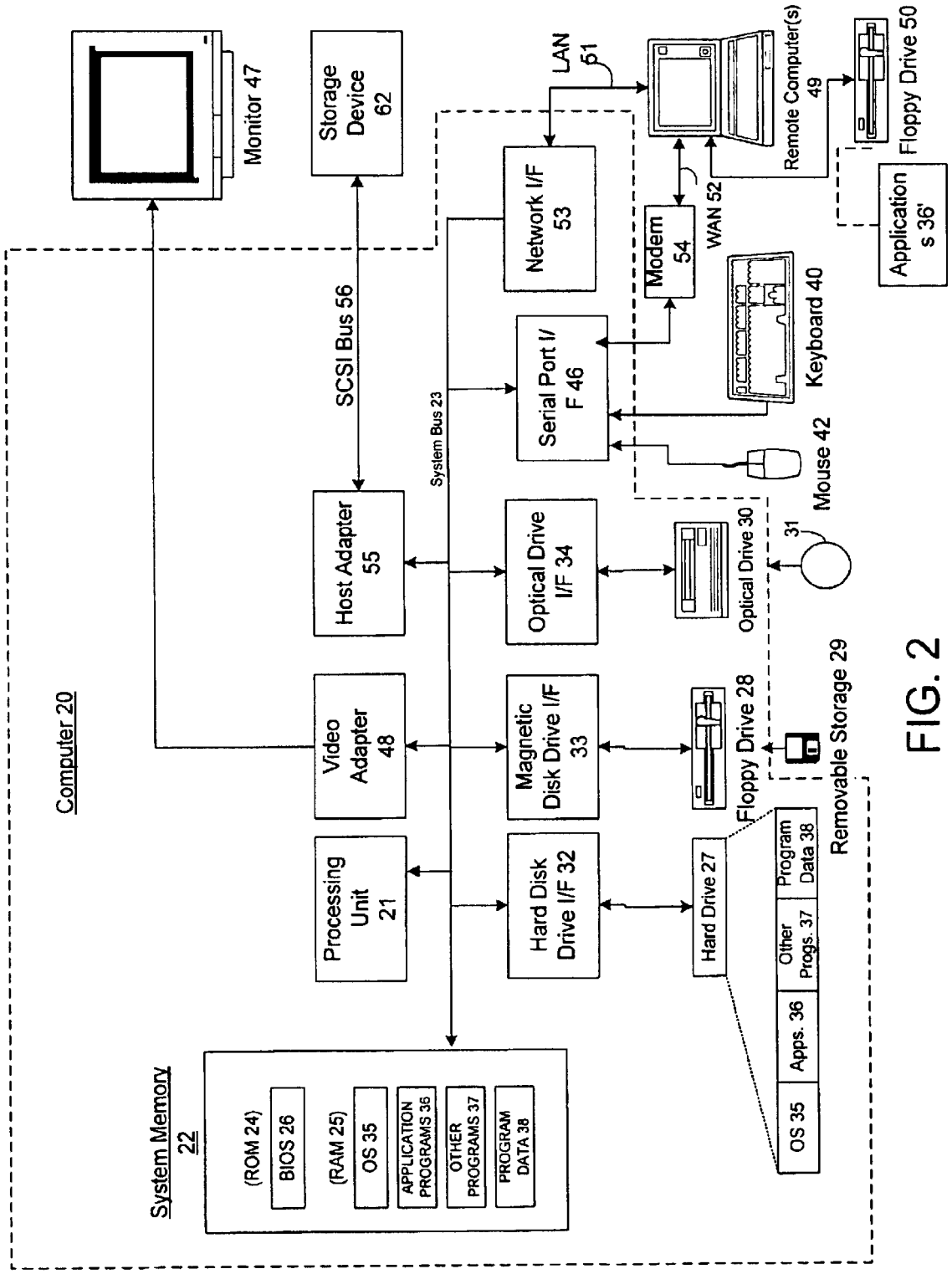
Monitor 47
Storage Device 62
LAN 51
Remote Computer(s) 49
Floppy Drive 50
Network I/F 53
Modem 54
WAN 52
Application s 36'
Keyboard 40
SCSI Bus 56
Serial Port I/ F 46
System Bus 23
Mouse 42
Host Adapter 55
Optical Drive I/F 34
Optical Drive 30
31
Computer 20
Video Adapter 48
Magnetic Disk Drive I/F 33
Floppy Drive 28
Removable Storage 29
Processing Unit 21
Hard Disk Drive I/F 32
Hard Drive 27
Program Data 38
Other Progs. 37
Apps. 36
OS 35
System Memory 22
(ROM 24)
BIOS 26
(RAM 25)
OS 35
APPLICATION PROGRAMS 36
OTHER PROGRAMS 37
PROGRAM DATA 38

FIG. 2

FIG. 3

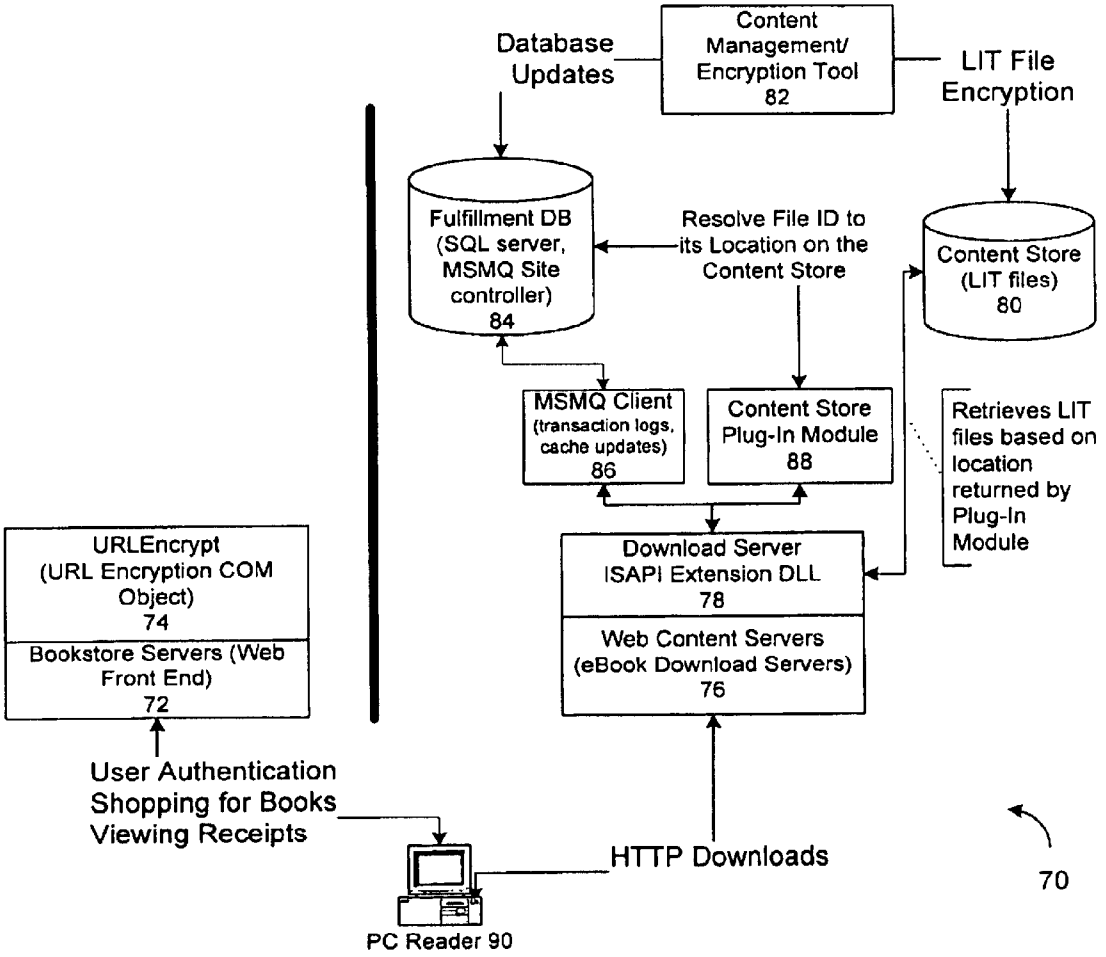
Database Updates
Content Management/ Encryption Tool 82
LIT File Encryption
Fulfillment DB (SQL server, MSMQ Site controller) 84
Resolve File ID to its Location on the Content Store
Content Store (LIT files) 80
MSMQ Client (transaction logs, cache updates) 86
Content Store Plug-In Module 88
Retrieves LIT files based on location returned by Plug-In Module
URLEncrypt (URL Encryption COM Object) 74
Bookstore Servers (Web Front End) 72
Download Server ISAPI Extension DLL 78
Web Content Servers (eBook Download Servers) 76
User Authentication
Shopping for Books
Viewing Receipts
HTTP Downloads
PC Reader 90
70

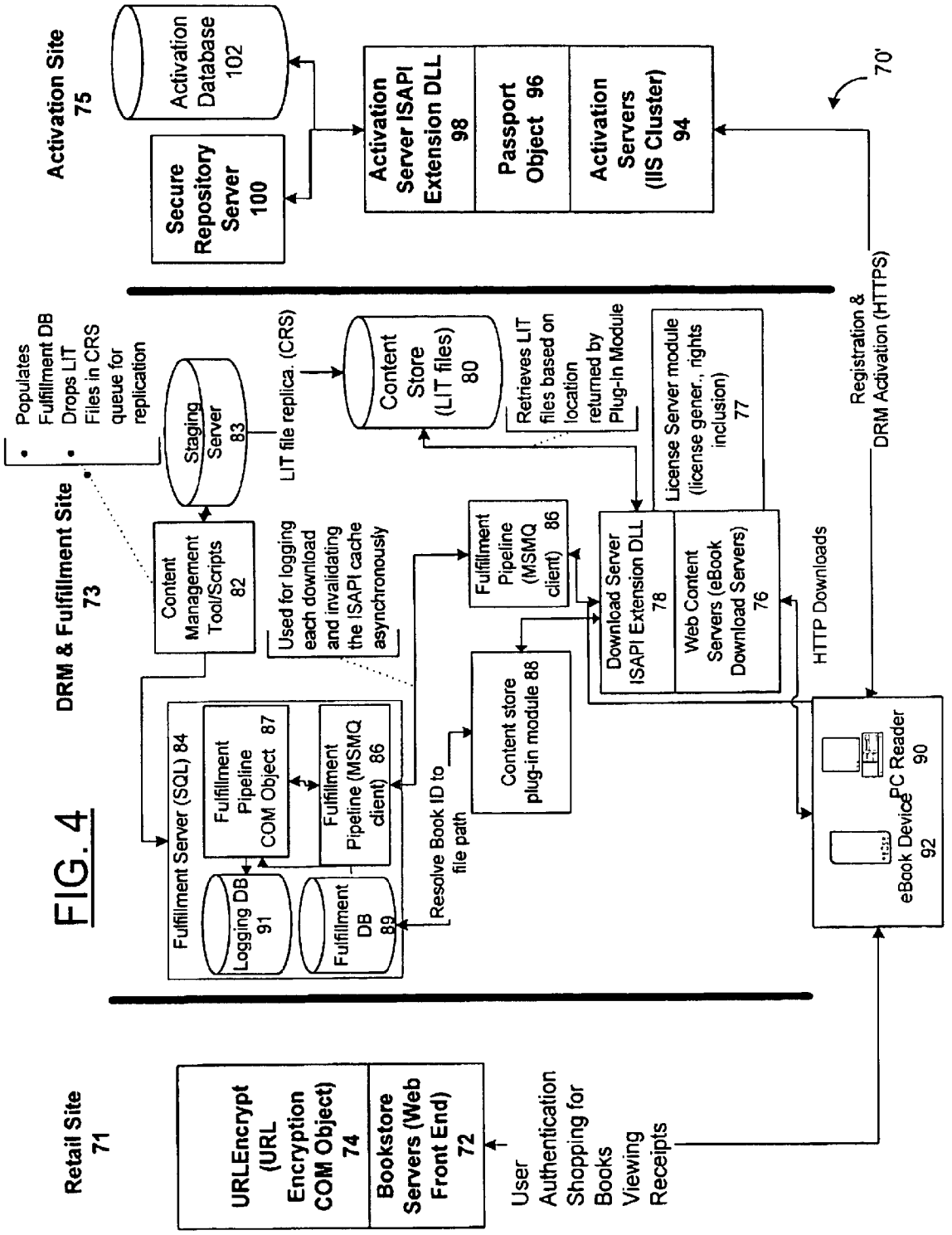
Activation Site 75
Activation Database 102
Secure Repository Server 100
Activation Server ISAPI Extension DLL 98
Passport Object 96
Activation Servers (IIS Cluster) 94
70'
Registration & DRM Activation (HTTPS)
DRM & Fulfillment Site 73
Populates Fulfillment DB
Drops LIT Files in CRS queue for replication
Staging Server 83
LIT file replica. (CRS)
Content Store (LIT files) 80
Retrieves LIT files based on location returned by Plug-in Module
License Server module (license gener., rights inclusion) 77
Content Management Tool/Scripts 82
Used for logging each download and invalidating the ISAPI cache asynchronously
Fulfillment Pipeline (MSMQ client) 86
Download Server ISAPI Extension DLL 78
Web Content Servers (eBook Download Servers) 76
HTTP Downloads
Fulfillment Server (SQL) 84
Fulfillment Pipeline COM Object 87
Fulfillment Pipeline (MSMQ client) 86
Logging DB 91
Fulfillment DB 89
Resolve Book ID to file path
Content store plug-in module 88
eBook Device 92
PC Reader 90
Retail Site 71
URLEncrypt (URL Encryption COM Object) 74
Bookstore Servers (Web Front End) 72
User Authentication
Shopping for Books
Viewing Receipts

FIG. 4

FIG. 5

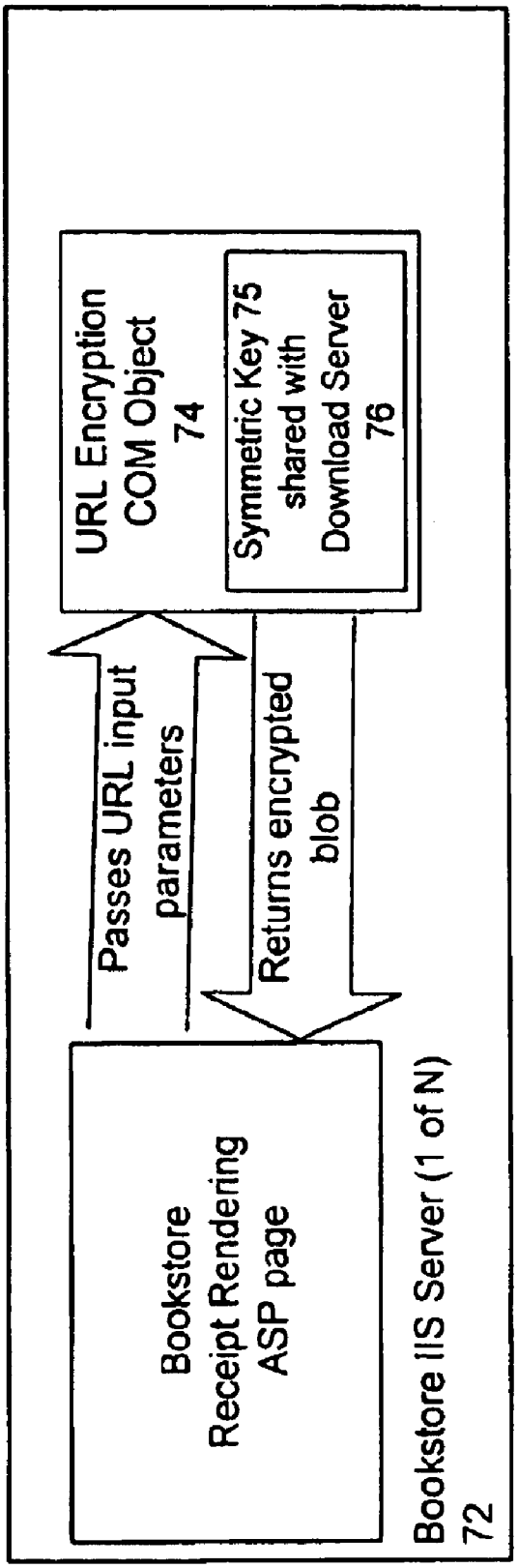
Bookstore
Receipt Rendering
ASP page
Passes URL input
parameters
Returns encrypted
blob
URL Encryption
COM Object
74
Symmetric Key 75
shared with
Download Server
76
Bookstore IIS Server (1 of N)
72

FIG. 6

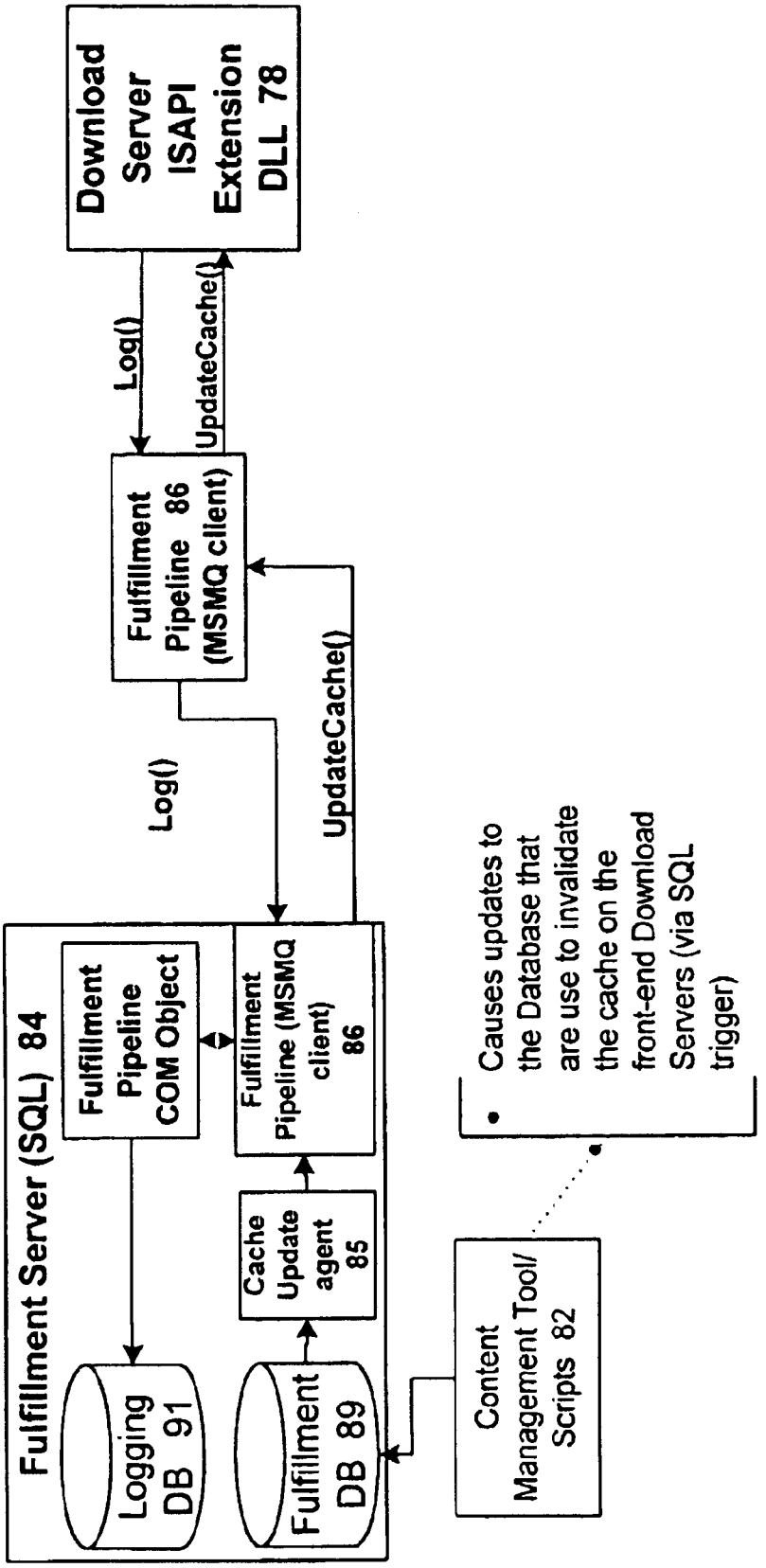
Download Server ISAPI Extension DLL 78
Log()
UpdateCache()
Fulfillment Pipeline 86 (MSMQ client)
Log()
UpdateCache()
Fulfillment Server (SQL) 84
Fulfillment Pipeline COM Object
Fulfillment Pipeline (MSMQ client) 86
Cache Update agent 85
Logging DB 91
Fulfillment DB 89
Content Management Tool/ Scripts 82
• Causes updates to the Database that are use to invalidate the cache on the front-end Download Servers (via SQL trigger)

FIG. 7

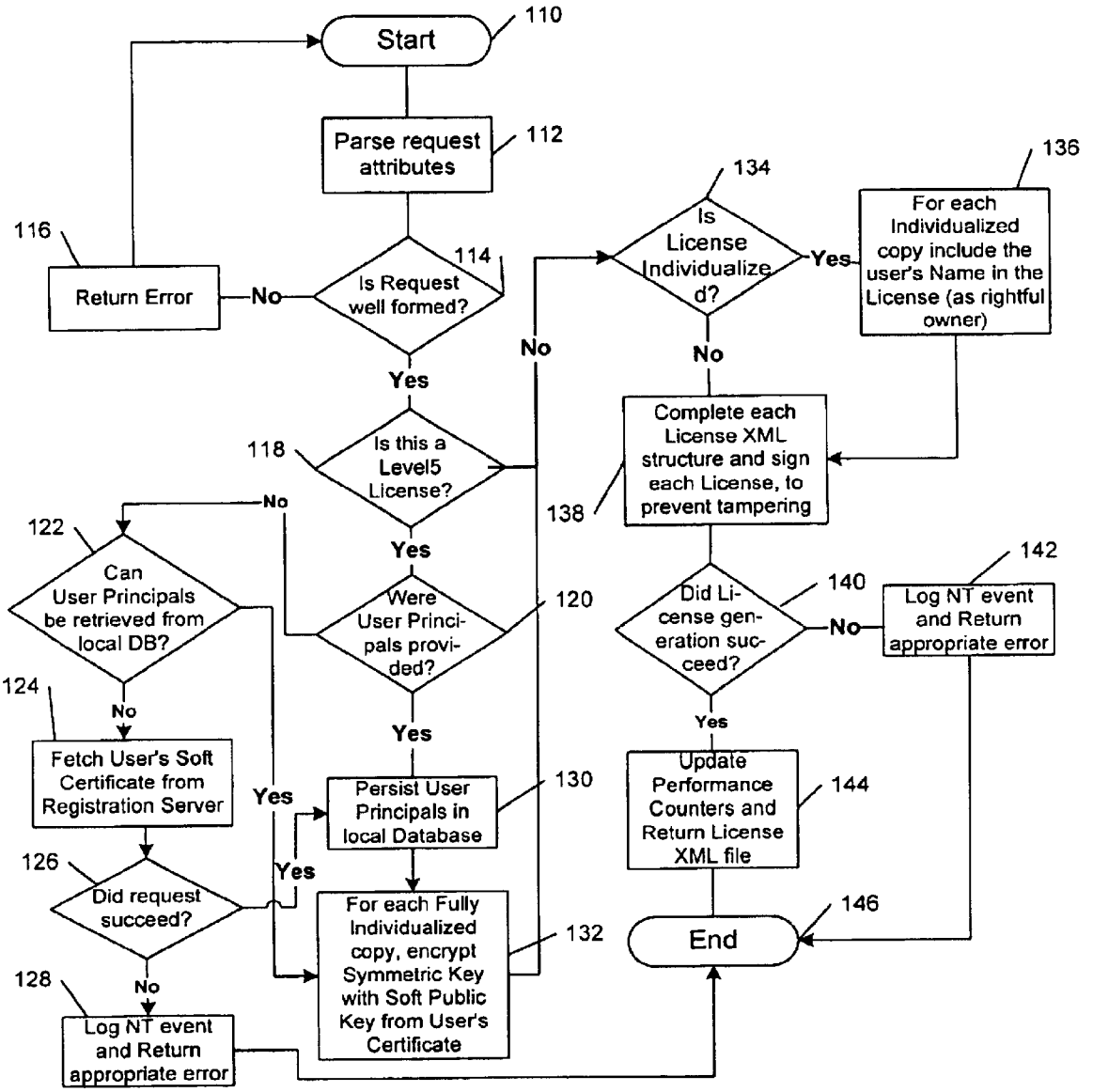
Start
110
Parse request attributes
112
Is Request well formed?
114
No
Return Error
116
Yes
Is this a Level5 License?
118
No
Yes
Were User Principals provided?
120
No
Yes
Persist User Principals in local Database
130
For each Fully Individualized copy, encrypt Symmetric Key with Soft Public Key from User's Certificate
132
Can User Principals be retrieved from local DB?
122
No
Yes
Fetch User's Soft Certificate from Registration Server
124
Did request succeed?
126
No
Yes
Log NT event and Return appropriate error
128
Is License Individualized?
134
Yes
No
For each Individualized copy include the user's Name in the License (as rightful owner)
136
Complete each License XML structure and sign each License, to prevent tampering
138
Did License generation succeed?
140
No
Log NT event and Return appropriate error
142
Yes
Update Performance Counters and Return License XML file
144
End
146

FIG. 8

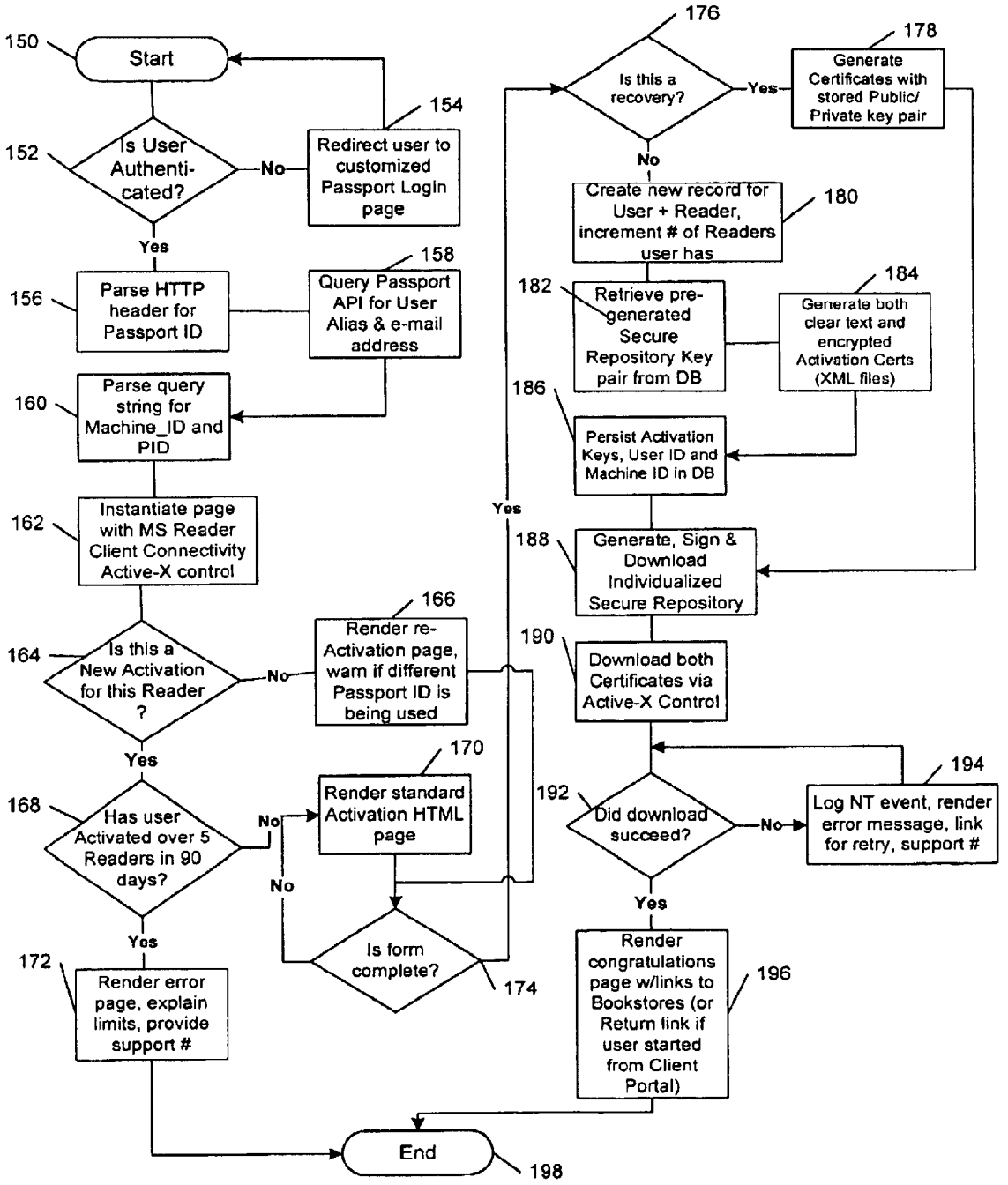
150
Start
152
Is User Authenti-cated?
No
154
Redirect user to customized Passport Login page
Yes
156
Parse HTTP header for Passport ID
158
Query Passport API for User Alias & e-mail address
160
Parse query string for Machine_ID and PID
162
Instantiate page with MS Reader Client Connectivity Active-X control
164
Is this a New Activation for this Reader ?
No
166
Render re-Activation page, warn if different Passport ID is being used
Yes
168
Has user Activated over 5 Readers in 90 days?
No
170
Render standard Activation HTML page
No
Yes
172
Render error page, explain limits, provide support #
Is form complete?
174
Yes
176
Is this a recovery?
Yes
178
Generate Certificates with stored Public/ Private key pair
No
Create new record for User + Reader, increment # of Readers user has
180
182
Retrieve pre-generated Secure Repository Key pair from DB
184
Generate both clear text and encrypted Activation Certs (XML files)
186
Persist Activation Keys, User ID and Machine ID in DB
188
Generate, Sign & Download Individualized Secure Repository
190
Download both Certificates via Active-X Control
192
Did download succeed?
No
194
Log NT event, render error message, link for retry, support #
Yes
Render congratulations page w/links to Bookstores (or Return link if user started from Client Portal)
196
End
198

FIG. 9

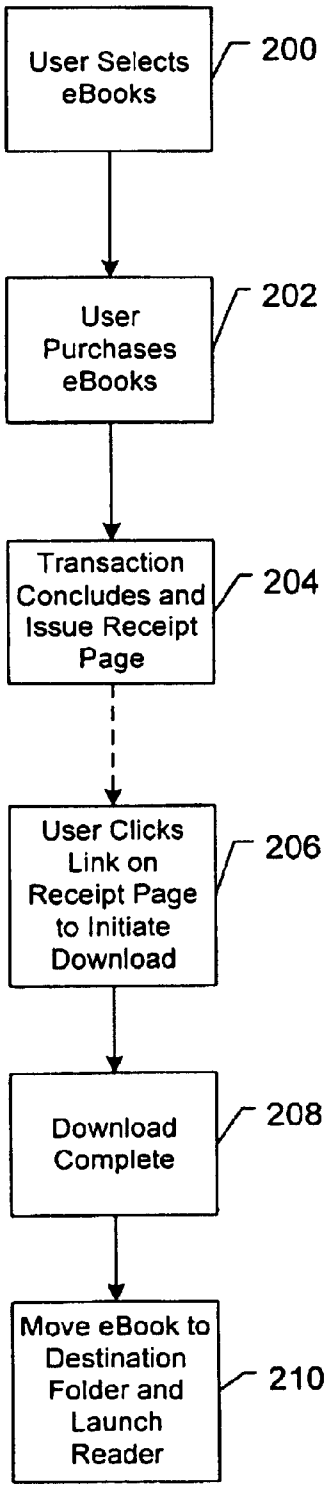
User Selects eBooks
200
User Purchases eBooks
202
Transaction Concludes and Issue Receipt Page
204
User Clicks Link on Receipt Page to Initiate Download
206
Download Complete
208
Move eBook to Destination Folder and Launch Reader
210

FIG. 10

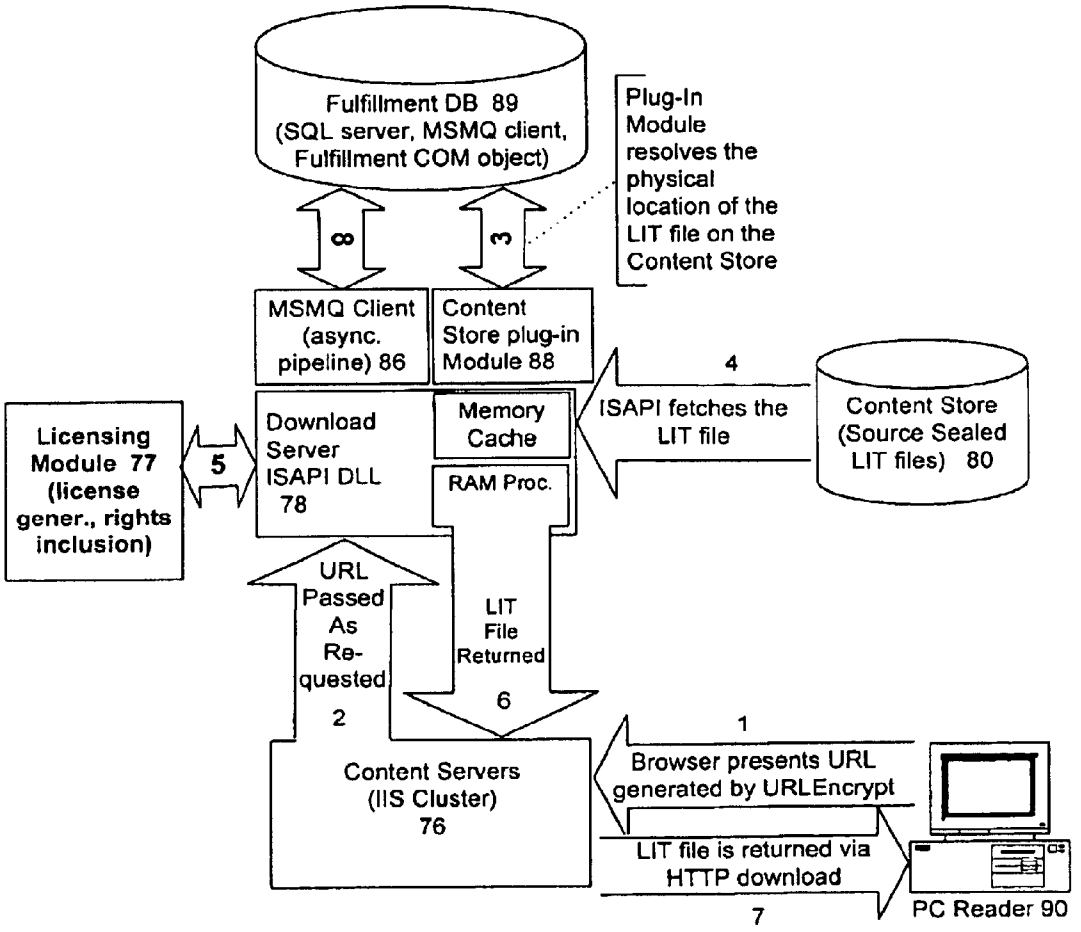
Fulfillment DB 89
(SQL server, MSMQ client,
Fulfillment COM object)
Plug-In
Module
resolves the
physical
location of the
LIT file on the
Content Store
8
3
MSMQ Client
(async.
pipeline) 86
Content
Store plug-in
Module 88
4
ISAPI fetches the
LIT file
Content Store
(Source Sealed
LIT files) 80
Licensing
Module 77
(license
gener., rights
inclusion)
5
Download
Server
ISAPI DLL
78
Memory
Cache
RAM Proc.
URL
Passed
As
Re-
quested
2
LIT
File
Returned
6
1
Browser presents URL
generated by URLEncrypt
Content Servers
(IIS Cluster)
76
LIT file is returned via
HTTP download
7
PC Reader 90

METHOD AND SYSTEM FOR BINDING ENHANCED SOFTWARE FEATURES TO A PERSONA

FIELD OF THE INVENTION

The present invention relates generally to the field of computing, and more particularly to methods and systems for binding certain software features and uses to a persona.

BACKGROUND OF THE INVENTION

As the availability and use of computers and palm-sized electronic devices has increased, it has become common for documents to be transmitted and viewed electronically. With improving communication over infrastructures such as the Internet, there is a tremendous drive to provide enhanced services and content to the devices. Examples of services and content that may be provided are authored works, such as books or other textual material. Electronic distribution of text documents is both faster and cheaper than conventional distribution of paper copies. The same principle applies to non-textual content, such as audio and video: electronic distribution of such content is generally faster and cheaper than the delivery of such content on conventional media (e.g., magnetic tape or optical disk). However, the low cost and instantaneity of electronic distribution, in combination with the ease of copying electronic content, is at odds with the goal of controlled distribution in a manner that protects the rights of the owners of the distributed works.

Once an electronic document is transmitted to one party, it may be easily copied and distributed to others without authorization by the owner of rights in the electronic document or, often, without even the owner's knowledge. This type of illicit document distribution may deprive the author or content provider of royalties and/or income. A problem with many present delivery schemes is that they may make no provisions for protecting ownership rights. Other systems attempt to protect ownership rights, but however, are cumbersome and inflexible and make the viewing/reading of the authored works (or otherwise rendering the authored works, in the case of non-text content such as music, video, etc.) difficult for the purchaser.

Thus, in view of the above, there is a need for an improved digital rights management system that allows of delivery of electronic works to purchasers in a manner that protects ownership rights, while also being flexible and easy to use. There is also a need for the system that provides flexible levels of security protection and is operable on several client platforms such that electronic content may be viewed/rendered by its purchaser on each platform. The digital rights management system of the present invention advantageously provides solutions to the above problems which protect the intellectual property rights of content owners and allow for authors or other content owners to be compensated for their creative efforts, while ensuring that purchasers are not over-burdened by the protection mechanism.

SUMMARY OF THE INVENTION

A server architecture is provided which supports the distribution of protected content in a digital rights management ("DRM") system. The architecture includes an activation server arrangement, and a distribution server arrangement. The architecture includes various security features that guard against unauthorized distribution or use of protected content, as well as software components that implement the security features.

In accordance with the architecture provided, content may be protected at a plurality of levels, including: no protection, source sealed, individually sealed (or "inscribed"), source signed, and fully individualized (or "owner exclusive"). "No protection" content is distributed in an unencrypted format. "Source sealed" and "individually sealed" content is encrypted and bundled with an encryption key that is cryptographically sealed with certain rights-management data associated with the content, such that the key cannot be retrieved if the rights-management data has been altered. The distinction between "source" and "individual" sealing is that "individually sealed" content includes in the rights-management data information pertinent to the rightful owner (e.g., the owner's name, credit card number, receipt number or transaction ID for the purchase transaction, etc.), such that this information cannot be removed from a working copy of the content thereby allowing for detection of unauthorized distributors. The particular type of information included is determined by the retailer of the copy. "Signed" content is cryptographically signed in such a way that the rendering application can verify its authenticity, or the authenticity of its distribution channel. "Fully individualized" content is encrypted content provided with a decryption key that has not merely been sealed with the rights-management information, but also encrypted in such a way that it cannot be accessed in the absence of a "secure repository" and "activation certificate," which are issued by the activation server arrangement only to a particular client or set of clients, thereby limiting the use of such content to a finite number of installations.

The activation server arrangement includes one or more server computing devices which "activate" client computing devices by providing code and data to these devices, where the code and data are necessary to access "fully individualized" content on a given client device. In one example, the "data" includes an activation certificate having a public key and an encrypted private key, and the "code" is a program (e.g., a "secure repository") that accesses the private key in the activation certificate by applying, in a secure manner, the key necessary to decrypt the encrypted private key. Preferably, the key pair in the activation certificate is persistently associated with an authenticatable "persona," such that a device can be "activated" to read content that has been individualized for that persona, but not content that has been "fully individualized" for other personas. As used herein, a "persona" is a unique identifier that can be tied to a user and can be securely authenticated by an out-of-band process—e.g., a username and password form on a web browser for use over a secure socket layer (SSL) is an example embodiment of such a process. Moreover, the activation server arrangement preferably provides a given activation certificate (that is, an activation certificate having a particular key pair) only after authenticating credentials (e.g., a username and password) associated with a persona. In accordance with a feature of the invention, the number of devices that a particular persona may activate may be limited by rate and or by number (e.g., five activations within a first 90 day period, followed by an additional activation for every subsequent 90 day period, up to a maximum of ten activations), thereby preventing the unchecked proliferation of devices on which individualized content can be rendered. As one example use of this technique, protected content may be distributed as a file that includes content encrypted with a symmetric key, where the symmetric key itself is provided via a license construct embedded in the file in a form encrypted by the certificate's public key, thus making it necessary to have both the activation certificate and accom-

panying secure repository prior to interacting with the licensed content.

The distribution server arrangement includes one or more retail servers and one or more fulfillment sites. Retail servers sell protected content (or otherwise enlist users to receive protected content). Fulfillment sites provide the actual content that has been sold by the retail servers. The operator of a retail server may be a different entity from the operator of a fulfillment site, thereby making it possible for a retailer to sell protected content simply by o entering into an agreement whereby a fulfillment site will provide content sold by the retailer. This allows the retailer to sell content without investing in the means to store or distribute the content. In one example, the retailer and the fulfillment site agree on a secret (e.g., a cryptographic key), and the retailer equips its server with software that uses the secret to create an encrypted instruction to provide the content to the purchaser. The retailer may then allow the purchaser to "fulfill" his or her purchase by providing an HTTP request to the purchaser (e.g., a POST request rendered as a hyperlink on a "receipt" or "confirmation" web page), where the HTTP request contains the address of the fulfillment site and the encrypted instruction. In the case of content requiring some level of individualization, the encrypted instruction may include the individualization information (e.g., the purchaser's name, or, in the case of "fully individualized" content, the purchaser's activation certificate). The fulfillment site receives the encrypted instruction when the purchaser clicks on the link, and the fulfillment site uses the shared secret to decrypt the instruction and provide the content in accordance therewith. A component object model (COM) object may be provided to the retailer which creates the encrypted instruction.

The fulfillment site may be organized as a fulfillment server plus one or more "download" servers and a content store. The content store stores content to be distributed to consumers. The fulfillment server maintains databases of information related to the fulfillment of content orders, such as the physical location of content items and the secret (e.g., the cryptographic key) necessary to decrypt instructions received from the retailer. The download servers perform the actual downloading of content to consumers/purchasers of the content, as well as any preparation of the content that is necessary to meet the protection requirements associated with the content (e.g., the download server may perform individualization of the content). Each download server may have a cache, where the download server obtains a copy of a content item from the content store (in accordance with the location specified in the fulfillment server database) the first time that download server is called upon to process a download of that item, where the download server stores the item in the cache for future downloads. The cache may have limits associated therewith, and it may expire items out of the cache based on an algorithm such as a "least recently used" algorithm. The download server may also provide information regarding the downloads that it processes to the fulfillment server for entry into a log. The download server may provide this information in the form of messages through an asynchronous messaging, such as MICROSOFT MESSAGE QUEUE (MSMQ). The fulfillment server may store the information in a "logging database." Additionally, when updates to information stored on the fulfillment server are made which affect the content item stored in the cache, the fulfillment server may use the messaging service to send messages to the various download servers indicating that the item should be invalidated in the download server caches.

Other features of the invention are described below.

BRIEF DESCRIPTION OF THE DRAWINGS

The foregoing summary, as well as the following detailed description, is better understood when read in conjunction with the appended drawings. For the purpose of illustrating the invention, like references numerals represent similar parts throughout the several views of the drawings, it being understood, however, that the invention is not limited to the specific methods and instrumentalities disclosed. In the drawings:

FIG. **1** is an exemplary electronic book (eBook) title file format;

FIG. **2** is a block diagram showing an exemplary computing environment in which aspects of the present invention may be implemented;

FIG. **3** is a block diagram of an embodiment of a first server architecture implementing aspects of a digital rights management system in accordance with the invention;

FIG. **4** is a block diagram of an embodiment of a second server architecture implementing aspects of a digital rights management system in accordance with the invention;

FIG. **5** is a block diagram illustrating certain interactions within a content provider server in accordance with aspects of the invention;

FIG. **6** is a block diagram showing components of an asynchronous fulfillment pipeline in accordance with aspects of the invention;

FIG. **7** is a flow diagram illustrating the process of generating a license in accordance with aspects of the invention;

FIG. **8** is a flow diagram illustrating a client reader activation process in accordance with aspects of the invention; and

FIGS. **9** and **10** are flow and block diagrams illustrating an eCommerce flow in accordance with aspects of the invention.

DETAILED DESCRIPTION OF THE INVENTION

The present invention is directed to a system for processing and delivery of electronic content wherein the content may be protected at multiple levels. A preferred embodiment of the invention is described, which is directed to the processing and delivery of electronic books, however, the invention is not limited to electronic books and may include all digital content such as video, audio, software executables, data, etc.

Overview

The success of the electronic book industry will undoubtedly require providing the existing book-buying public with an appealing, secure, and familiar experience to acquire all sorts of textual material. This material may include "free" or low-cost material requiring little copy protection, to "premium-quality" electronic book titles (herein "eBooks") requiring comprehensive rights protection. In order to enable a smooth transition from the current distribution and retail model for printed books into an electronic distribution system, an infrastructure must exist to ensure a high level of copy protection for those publications that demand it, while supporting the distribution of tides that require lower levels of protection.

The Digital Rights Management (DRM) and Digital Asset Server (DAS) systems of the present invention advantageously provides such an infrastructure. The present inven-

tion makes purchasing an eBook more desirable than "stealing" (e.g., making an unauthorized copy of) an eBook. The non-intrusive DRM system minimizes piracy risk, while increasing the likelihood that any piracy will be offset by increased sales/distribution of books in the form of eBooks. In addition, the present invention provides retailers with a system that can be rapidly deployed at a low-cost.

The primary users of the DRM System are publishers and retailers, who use and/or deploy the DRM System to ensure legitimacy of the content sold as well as copy protection. Exemplary users of the DRM System may be the traditional publisher, the "leading edge" publisher, and the "hungry author." The traditional publisher is likely to be concerned about losing revenue from their printed book publishing operation to eBook piracy. The leading edge publisher is not necessarily concerned with isolated incidents of piracy and may appreciate that eBooks commerce will be most successful in a system where consumers develop habits of purchase. Meanwhile, the hungry author, who would like to collect money for the sale of his or her works, is more interested in attribution (e.g., that the author's name be permanently bound to the work).

As will be described in greater detail below, the DRM System of the present invention accomplishes its goals by protecting works, while enabling their rightful use by consumers, by supporting various "levels" of protection. At the lowest level ("Level 1"), the content source and/or provider may choose no protection via unsigned and unsealed (clear-text) eBooks that do not include a license. A next level of protection ("Level 2") is "source sealed," which means that the content has been encrypted and sealed with a key, where the seal is made using a cryptographic hash of the eBook's title's meta-data (see below) and the key is necessary to decrypt the content. Source sealing guards against tampering with the content or its accompanying meta-data after the title has been sealed, since any change to the meta-data will render the title unusable; however, source sealing does not guarantee authenticity of the a copy of the title (i.e., source sealing does not provide a mechanism to distinguish legitimate copies from unauthorized copies). In the case of the "hungry author," the author's name may be included in the meta-data for permanent binding to the content, thereby satisfying the "hungry author's" goal of attribution. A next level of protection ("Level 3") is "individually sealed" (or "inscribed"). An "individually sealed" title is an eBook whose meta-data includes information related to the legitimate purchaser (e.g., the user's name or credit card number, the transaction ID or receipt number from the purchase transaction, etc.), such that this information is cryptographically bound to the content when the title is sealed. This level of protection discourages people from distributing copies of the title, since it would be easy to detect the origin of an unauthorized copy (and any change to the meta-data, including the information related to the purchaser, would make it impossible, or at least improbable, that the necessary decryption key could be unsealed).

The next level of protection ("Level 4") is "source signed." Source signed eBooks are titles that can be authenticated by a "reader" (which, as more particularly discussed below, is a user application that enables the reading of eBooks on a computing device, such as a PC, a laptop, a Personal Digital Assistant (PDA), PocketPC, or a purpose-built reading device). Authenticity may preferably be defined in three varieties: "tool signed," which guarantees that the eBook title was generated by a trusted conversion and encryption tool; "owner signed," which is a tool signed eBook that also guarantees the authenticity of the content in the copy (e.g., the owner may be the author or other copyright holder); and "provider signed," which is a tool signed eBook that attests to the authenticity of its provider (e.g., the publisher or retailer of the content). The "tool," the owner, and the provider may each have their own asymmetric key pair to facilitate the creation and validation of digital signatures of the information. A title may be both provider signed and source signed, which facilitates authentication of the distribution channel of the title (e.g., through a signature chain in the copy). The strongest level of protection is "fully individualized" or "owner exclusive" ("Level 5"). "Fully individualized" titles can only be opened by authenticated reader applications that are "activated" for a particular user, thereby protecting against porting of a title from one person's reader (or readers) to a reader that is not registered to that person. In order for the reader of the present invention to open a title protected at Level 5, the Reader must be "activated" (i.e., the device on which the reader resides must have an activation certificate for a particular persona, and a secure repository). The process of activation is described in greater detail below with reference to FIG. **8**.

The systems of the present invention also define an architecture for sharing information between a reader, a content provider and a content source, how that information is used to "seal" titles at the various levels, and how that information must be structured. The availability of these choices will enable content sources to pick and choose which content will be sold to what users and using what protection (if any). The particular information may be used to sign and/or seal titles for use by a reader, and a compatible reader (which, in the case of level 5, may be a reader activated for a particular persona) may unseal the title and enable reading of the eBook.

eBook File Structure

The DRM system of the present invention protects content by incorporating it in a file structure, such as the exemplary structure shown in FIG. **1**. Referring to FIG. **1**, eBook **10** contains content **16**, which is text such as a book (or any electronic content) that has been encrypted by a key (the "content key"), which itself has been encrypted and/or sealed. In a preferred embodiment, the key is a symmetric key **14**A that is sealed with a cryptographic hash of meta-data **12** or, in the case of level 5 titles, with the public key of the user's activation certificate. This key is stored either as a separate stream in a sub-storage section of the eBook file (DRM Storage **14** in the diagram) or, in the case of level 5 titles, in the license. (In the case of level 5 titles, instead of storing the content key as a separate stream, stream **14**A contains a license, which is a construct that defines the rights that the user can exercise upon purchase of the title. In titles that have a license, the content key is contained within the license.). Also included in the DRM storage **14** are the source stream **14**B, which may include the name of the publisher (or other content source), as well as the bookplate stream **14**C, which, for individually sealed (level 3 and/or level 5) titles, includes the consumer's name as provided by the retailer (which may, for example, be obtained as part of the commercial transaction of purchasing an eBook **10**, such as from the consumer's credit card information). The method of calculating the cryptographic hash that encrypts and/or seals the symmetric key **14**C (or the method of using such cryptographic hash to seal the key) is preferably a "secret" known only to trusted content preparation tools and trusted rendering applications. Using a hash in this way may complicate/discourage tampering with the meta-data **12** contained with the eBook **10**. It is noted that any method may

be used to "seal" an eBook, so long as such method provide some measure of tamper resistance to the eBook **10**.

In accordance with the present invention, the meta-data **12** may include a copyright tag, which describes the rights granted to the user or purchaser by the content source (e.g., the publisher). Whenever such tag is present, the client (e.g., device **90** or **92** shown in FIG. **4**) may display to a user the text included in the tag. It will be appreciated that the act of reminding users of the copyright laws that apply to their eBooks may serves to deter typical users from attempting to copy eBooks.

DRM System Architecture

As shown in FIG. **2**, an exemplary system for implementing the invention includes a general purpose computing device in the form of a conventional personal computer or network server **20** or the like, including a processing unit **21**, a system memory **22**, and a system bus **23** that couples various system components including the system memory **22** to the processing unit **21**. The system bus **23** may be any of several types of bus structures including a memory bus or memory controller, a peripheral bus, and a local bus using any of a variety of bus architectures. The system memory includes read-only memory (ROM) **24** and random access memory (RAM) **25**. A basic input/output system **26** (BIOS), containing the basic routines that help to transfer information between elements within the personal computer **20**, such as during start-up, is stored in ROM **24**. The personal computer or network server **20** may further include a hard disk drive **27** for reading from and writing to a hard disk, not shown, a magnetic disk drive **28** for reading from or writing to a removable magnetic disk **29**, and an optical disk drive **30** for reading from or writing to a removable optical disk **31** such as a CD-ROM or other optical media. The hard disk drive **27**, magnetic disk drive **28**, and optical disk drive **30** are connected to the system bus **23** by a hard disk drive interface **32**, a magnetic disk drive interface **33**, and an optical drive interface **34**, respectively. The drives and their associated computer-readable media provide non-volatile storage of computer readable instructions, data structures, program modules and other data for the personal computer or network server **20**. Although the exemplary environment described herein employs a hard disk, a removable magnetic disk **29** and a removable optical disk **31**, it should be appreciated by those skilled in the art that other types of computer readable media which can store data that is accessible by a computer, such as magnetic cassettes, flash memory cards, digital video disks, Bernoulli cartridges, random access memories (RAMs), read-only memories (ROMs) and the like may also be used in the exemplary operating environment.

A number of program modules may be stored on the hard disk, magnetic disk **29**, optical disk **31**, ROM **24** or RAM **25**, including an operating system **35** (e.g., Windows® 2000, Windows NT®, or Windows 95/98), one or more application programs **36**, other program modules **37** and program data **38**. A user may enter commands and information into the personal computer **20** through input devices such as a keyboard **40** and pointing device **42**. Other input devices (not shown) may include a microphone, joystick, game pad, satellite disk, scanner or the like. These and other input devices are often connected to the processing unit **21** through a serial port interface **46** that is coupled to the system bus **23**, but may be connected by other interfaces, such as a parallel port, game port, universal serial bus (USB), or a 1394 high-speed serial port. A monitor **47** or other type of display device is also connected to the system bus **23** via an interface, such as a video adapter **48**. In addition to the monitor **47**, personal computers typically include other peripheral output devices (not shown), such as speakers and printers.

The personal computer or network server **20** may operate in a networked environment using logical connections to one or more remote computers, such as a remote computer **49**. The remote computer **49** may be another personal computer, another network server, a router, a network PC, a peer device or other common network node, and typically includes many or all of the elements described above relative to the personal computer **20**, although only a memory storage device **50** has been illustrated in FIG. **2**. The logical connections depicted in FIG. **2** include a local area network (IAN) **51** and a wide area network (WAN) **52**. Such networking environments are commonplace in offices, enterprise-wide computer networks, Intranets and the Internet.

When used in a LAN networking environment, the personal computer or network server **20** is connected to the local network **51** through a network interface or adapter **53**. When used in a WAN networking environment, the personal computer or network server typically includes a modem **54** or other means for establishing communications over the wide area network **52**, such as the Internet. The modem **54**, which may be internal or external, is connected to the system bus **23** via the serial port interface **46**. In a networked environment, program modules depicted relative to the personal computer or network server **20**, or portions thereof, may be stored in the remote memory storage device **50**. It will be appreciated that the network connections shown are exemplary and other means of establishing a communications link between the computers may be used.

Server Architecture

Referring now to FIG. **3**, there is illustrated a first exemplary server architecture **70** implementing the DRM System of the present invention. Server architecture **70** is implemented and deployed at, for example, a retail/distribution site. In one embodiment of the invention, all components of server architecture **70** are associated with a single party (e.g., a large electronic bookstore) that both retails eBooks **10** and performs the actual download of eBooks **10** to customers' reading devices. In another embodiment of the invention, the bookstore servers **72** and the URL encryption COM object **74** are associated with one party (e.g., a retailer of eBooks **10** who does not perform downloads), and the other components of server architecture **70** are associated with a second party (e.g., a "fulfillment house"), which performs downloads of eBooks **10** that are sold/retailed by the first party.

The functions provided by the server architecture **70** include: encryption of source eBooks, conversion to the target reader format, generation of the license construct defining the rights granted to the user (in level 5 titles), sealing of the content prior to download in accordance with requirements (e.g., a level of protection) set forth by the publication provider, and download of ebook titles. This server architecture also includes features that provide for a flexible configuration that enables the users of this technology (content providers, retailers) to scale their system according to their needs. These features include: dynamic resolution (through a database lookup) of file IDs to physical file locations, in-memory caching of the most popular downloads for higher efficiency and better performance (where the cache may expire items based on, e.g., a least-recently-

used function), and asynchronous logging of each downloaded file (also to a database) for later auditing/reporting and/or billing purposes. Other functions may be performed by the server architecture **70** in accordance with the present invention.

Bookstore servers **72** preferably are MICROSOFT® Internet Information Server (IIS) servers implemented on a network server, such as computer **20** illustrated in FIG. **2**. Bookstore servers **72** may communicate with users via web browsing software (e.g., by providing web pages for viewing with a MICROSOFT INTERNET EXPLORER browser or a NETSCAPE NAVIGATOR browser). Through this communication, bookstore servers **72** may allow users to shop for eBook titles, establish their membership relationship with the retailer, pay for their transactions, and access proof-of purchase pages (serve-side receipts). URL encryption object **74** may reside on bookstore servers **72**. URL encrypt object **74** encrypts a set of parameters relating to an eBook **10** that has been purchased on bookstore server **72**. URL encryption object **74** may encrypt these parameters using a secret (e.g., a symmetric cryptographic key) shared between bookstore server **72** and web content server **76**. For example, the parameters may include an identification of the eBook purchased, information about the purchase such as the purchaser's name or credit card number or a transaction ID (e.g., in the case of level 3 or 5 titles), and a timestamp. It will be appreciated by those skilled in the art that the parameters listed above are exemplary, and different parameters could be used without departing from the spirit and scope of the invention. The encrypted parameters may be included in an HTTP request that points to web content server **76**, such that content server **76** can fulfill the purchase made at bookstore server **72**. For example, after an eBook **10** has been selected by a purchaser, bookstore server **72** could upload to the purchaser's computing device a web page containing a link associated with a POST request, where the POST request points to a content server such as "www.content-provider.com", and the body of the POST contains the encrypted parameters. In an alternative embodiment of the invention, the link provided on the web page could be associated with a GET request, such as "http://www.content-provider.com/isapi/ds.dll?action=download&value=<encrypted parameters>," although this alternative embodiment has the disadvantage that some browsers place a limit on the acceptable size of a URL (e.g., 2 kilobytes), thereby restricting the size of the encrypted parameters. Whichever type of HTTP request is associated with the link, the user could then follow the link to initiate the download. Because the parameters have been encrypted with a secret shared between bookstore server **72** and content server **76**, it is possible for content server **76** to verify that the encrypted parameters originated at a legitimate bookstore server **72** (e.g., one for which the operator of content server **76** has agreed to provide download services). If a timestamp is included, then content server **76** can use the timestamp to ensure that the encrypted parameters were recently generated, thereby resisting "playback attacks" (i.e., by "sniffing" of the HTTP request by one who wants to download eBooks that he or she has not rightfully purchased). URL encryption object **74** is preferably implemented as a server-side COM object, and is preferably instantiated via Active Server Pages (ASP).

The content servers **76** are preferably IIS servers implemented on a network server (preferably different from bookstore server **72**). Like bookstore server **72**, content server **76** may be implemented on a computer such as computer **20** shown in FIG. **2**. A download server ISAPI Extension **78** is provided, which is an IIS extension DLL that preferably handles the incoming requests to the content servers **76**. The ISAPI DLL **78** is responsible for validating download requests, retrieving the appropriate eBook file **10** from the content store **80** via content store plug-in module **88**, individually sealing copies, returning the eBook titles **10** to the end-users, and logging the transaction into the fulfillment database **84** via an asynchronous messaging module. MICROSOFT Message Queue (MSMQ) independent client **86** is an exemplary asynchronous messaging module that may be used in server architecture **70** (and server architecture **70'** depicted in FIG. **4** and discussed below). While use of Microsoft's MSMQ technology is preferable for asynchronous communication of its server-to-server messages (MSMQ Client **86**), it will be appreciated by those skilled in the art that any store-and-forward messaging technology may be used. According to one aspect of server architecture **70** (and architecture **70'**), such resilient messaging technology may be used to achieve high degrees of reliability and scalability, since all server to server messaging that does not require real-time communications is carried out using an asynchronous communications pipeline.

Content store **80** is preferably a large, network attached file system or database management system (or a plurality of such file systems or database management systems). Content store **80** serves as a repository for LIT titles (eBooks **10**) used by the download server ISAPI **78** when fulfilling orders for eBooks **10**. Content store **80** preferably exposes a Universal Naming Convention (UNC) path that can be accessed by download server ISAPI **78**. For security reasons, it is preferable that content store(s) **80** exist behind a firewall and not be exposed directly to the Internet. Content management and encryption tool **82** is a component that performs functions such as converting content to the LIT format (e.g., eBook **10**), encrypting and sealing each eBook title on the content store **80**. Content management and encryption tool **82** also updates fulfillment database **84** with the physical location of each LIT file on the content store **80**, which is mapped to their unique ID on the fulfillment database **84**. Tool **82** accepts clear-text source files (LIT, OEB, HTML, etc.) and generates encrypted LIT files that are source sealed (e.g., level 2), for later retrieval by the download server ISAPI **78**.

Referring now to FIG. **4**, there is illustrated a second server architecture **70'** in accordance with the present invention. Server architecture **70'** is a distributed model, and includes three data centers: a retail site **71**, a DRM & fulfillment site **73**, and an activation site **75**. As with server architecture **70**, retail of content and fulfillment of content orders may be performed by a single party, or a first party may retail eBooks **10** while a second party fulfills orders for eBooks **10** that were sold by the first party. In this latter scenario, retail site **71** is associated with the first party, and DRM & fulfillment site **73** is associated with the second party. Within the architecture of FIG. **4**, it is preferable that all web server-based applications be clustered behind a virtual IP address, and that content servers be dual-homed. It is also preferable that activation servers **94** rely on the MICROSOFT® PASSPORT™ membership system for associating activation certificates to end-user personas, as will be described below (although PASSPORT is merely exemplary of a namespace authority that may be used for this purpose).

The following is a brief description of the components of server architecture **70'**. Bookstore servers **72** associated with retail site **71** are network servers implemented on a computer such as computer **20**. Preferably, bookstore servers **72**

run WINDOWS® 2000 Advanced Servers running IIS. As in architecture **70**, these servers host the commercial web site that allow users to perform actions such as shopping for eBook titles, establishing their membership relationship with the retailer, paying for their transactions, and/or accessing the proof of purchase pages (server-side receipts). URL encryption object **74** is provided for integration into the retailer site **71**. As in server architecture **70**, the URL encryption object **74** of server architecture **70'** may be implemented as a server-side COM object installed on the bookstore servers **72** and instantiated via ASP pages, and it may encrypt parameters relating to the purchase of an eBook **10** such that content server **76** may validate the encrypted parameters, authenticate the retailer via a shared secret (e.g., a symmetric key used to encrypt the parameters), avoid playback attacks, and determine the content to download to end-users.

Content server(s)/download server(s) **76** are preferably WINDOWS® 2000 Advanced Servers running IIS. Content servers/download servers **76** host the core components of the DAS fulfillment application, including download server ISAPI extension **78**, content store plug-in module **88**, license server module **77**, and fulfillment pipeline client **86**.

As noted above, the download server ISAPI Extension **78** is preferably an IIS extension DLL that handles incoming requests to the content servers **76**. It is responsible for validating each download request, individually sealing copies (when necessary), requesting a license for fully individualized (i.e., level 5) copies of eBooks, returning the eBook titles to the end-users, and logging the download transaction in a database, such as logging database **91**.

The content store plug-in module **88** is preferably a DLL which is responsible for determining the physical location on the content store **88** of each of the LIT files (eBooks) being downloaded, based on a combination of parameters (e.g., book ID and book ID type parameters) included on the download request (i.e., the encrypted parameters attached to the URL). Plug-in module **88** also retrieves, from fulfillment database **89**, configuration information (e.g., the licensor's private key and public key certificate, a list of retailers supported and their symmetric keys, etc.) required to bootstrap the download server ISAPI extension DLL **78**.

License server module **77** is a sub-component of the download server ISAPI extension DLL **78**. It is responsible for generating and sealing licenses for level 5 protected LIT files. As more fully described below, a license is a construct that defines the rights that the rights that the user may exercise upon purchase of an eBook title. License server module **77** also validates the activation certificate of the user to whom the eBook is being downloaded and signs each license with the private key of the fulfillment center provider, which will later allow reader **90** or **92** to authenticate the distribution channel when the downloaded LIT file is accessed on such reader. Exemplary readers are fully described in Attorney's Docket No. MSFT-0123, filed concurrently herewith, which is expressly incorporated herein by reference in its entirety.

The fulfillment pipeline client **86** is preferably a MICROSOFT® Message Queue (MSMQ) independent client, which is available with the WINDOWS® 2000 Server product family. This component implements the asynchronous communications pipeline between the download Server ISAPI **78** and the fulfillment database **89**. The ISAPI **78** logs each download transaction via a message posted to the local MSMQ client **86** on each content server **76**, which in turn will store and forward such message in a resilient form to a similar MSMQ client **86** hosted on the fulfillment server **84**. This pipeline will also be used for invalidating cached entries on an ISAPI RAM cache (located on content servers **76**), via messages that are posted from the fulfillment server **84** to the ISAPI DLL **78** via the same set of locally hosted MSMQ clients.

As in server architecture **70**, the content store **80** of server architecture **70'** is preferably a large, network attached file system or database management system. It serves as a repository for the LIT titles used by the download server ISAPI **78** when fulfilling the orders. This server preferably runs WINDOWS® 2000 Advanced Server and exposes a UNC path that can be accessed by the download server ISAPI DLL. This may be accomplished via a setup application provided by DAS. It is also preferable that the content store **80** exists behind a firewall and is not exposed to the Web.

The fulfillment server **84** is preferably a WINDOWS 2000 Advanced Server running MICROSOFT® SQL 7.0 (or later). This server hosts a fulfillment database **89**, a logging database **91**, a fulfillment pipeline client **86**, and a fulfillment pipeline COM object **87**. Fulfillment database **84** hosts tables that map the combination of a "Book ID" and "Book ID Type" to the physical location of each LIT file on content store **80**. Database **84** also contains information about each LIT file that may be required for fulfillment, such as the book title, the book author, DRM protection level, and/or suggested retail price. The full range of information may vary in accordance with the business rules/practices of each fulfillment center (e.g., the entity that operates content server **76**), but preferably the information includes those items listed above. A command-line script may be provided that creates the necessary tables and stored procedures for this database, in addition to adding sample entries that can be used as reference by the fulfillment center when designing their content management processes.

Logging database **91** is used for logging each download transaction from the download server ISAPI DLL **78** (for later billing/reporting when applicable). The fulfillment pipeline client **86** is preferably a MICROSOFT® Message Queue (MSMQ) independent client which exists on the content/download servers **76**, as described above. The fulfillment pipeline object **87** is preferably a COM object that is triggered by the MSMQ independent client hosted on the fulfillment server **84** each time an incoming message is written to the inbound queue on this server. Fulfillment pipeline object **87** extracts the logging information from each MSMQ message and write it to logging database **91**, where it may later be used by reporting scripts. Additionally, fulfillment pipeline object **87** will be triggered by changes in the fulfillment database **89** and will push any update/delete information to the various MSMQ independent clients **86** hosted on the download servers **76**.

Content management tool **82** is responsible for managing the information stored in the fulfillment database **89**. When LIT files are added to the content store **80**, this tool writes the appropriate fields into the fulfillment database **89** (e.g., the Book ID to physical location mapping) such that content store plug-in module **88** may later find the requested LIT files. Similarly, if any changes are made (e.g., a change the DRM level on a LIT file) this tool provides the interface from which those responsible for the content management function inside the fulfillment center (i.e., human content administrators) would carry out these tasks.

Fulfillment centers **73** may accomplish the task of content management by building a set of ASP pages that, via

standard IIS COM objects, write all the relevant information into the fulfillment database **89** and place the incoming LIT file (already encrypted as a source sealed copy) into a staging server **83**, which would mimic the directory structure of the production content store **80**. From there, LIT files would be automatically replicated using, e.g., Site Server 2000 Content Replication Server, into the production content store server. Staging server **83** is not necessarily required to implement the DAS system, but it is an advantageous approach to replicate LIT files from the network of the fulfillment partner into the production content store servers by using tools such as MICROSOFT® content replication server (CRS).

The activation servers **94** perform the function of providing each client reader (e.g., PC reader **90** or dedicated reading device **92**) with a unique secure repository and an activation certificate. An exemplary secure repository, and systems and methods for providing same, are disclosed in Attorney's Docket No. MSFT-0126, filed concurrently herewith, which is expressly incorporated herein by reference in its entirety. The secure repository and activation certificate associates the activated reader with an online persona (e.g., a MICROSOFT® PASSPORT™ ID) to ensure that users will be able read their rightfully acquired titles on all instances of readers that they own or have activated to their persona (but not on non-activated readers, or readers not activated for that persona)—assuming they activate their readers using the same user ID and password every time.

Activation Server **94** includes a PASSPORT object **96** and an activation server ISAPI Extension DLL **98**. The PASSPORT object **96** provides the required interfaces into the PASSPORT™ servers that authenticate the end-users using, for example, their hotmail accounts (or other PASSPORT credentials). In accordance with aspects of the present invention, this object advantageously associates the activation certificate with a persona, instead of a single PC, thus allowing each persona to utilize multiple readers to read level 5 titles. While it will be appreciated that tying level 5 titles to a "persona" permits wider use of level 5 titles than if they were bound to a single device, defining a persona in terms of an established namespace authority such as PASSPORT servers is also serves the goal of limiting the unrestrained use of level 5 titles that might otherwise exist if users were permitted to use an arbitrary label to function as a persona. In the case of PASSPORT credentials, personal information relating to a particular user is associated with that user's PASSPORT credentials, possibly ranging from the user's E-mail account to his credit card number. Thus, a user is unlikely to share his PASSPORT ID and password with a large group of people, thereby ensuring that the persona to which a reader is activated is genuinely associated with a particular user (or, possibly, a family that shares a single PASSPORT account). While a PASSPORT server is an exemplary namespace authority that can provide this advantageous feature, it will be appreciated that other namespace authorities could be used without departing from the spirit and scope of the invention. In such an alternative embodiment, PASSPORT object **96** would be replaced with a different object which communicates with the alternative namespace authority.

The activation server ISAPI Extension DLL **98** carries out tasks associated with the activation process on the front-end activation servers, including receiving a hardware ID uploaded by the reader client, creating a unique machine ID based on the hardware ID, posting a request to the secure repository server(s) **100**, signing each unique secure repository received from secure repository server(s) **100**, generating and (optionally) encrypting the activation certificate, updating activation database **102**, and downloading both the secure repository and the activation certificate to the reader client. The activation process is more particularly described below in connection with FIG. **8**.

The secure repository servers **100** are preferably standalone servers located behind a firewall in a data center. They are accessed by the activation servers **94** for generating individualized secure repositories for each reader being activated. These servers are preferably dedicated, and preferably run a WINDOWS® 2000 or WINDOWS NT® service that exposes a socket interface to activation servers **94**. The secure repository service links a distinct executable for every unique machine ID and passport ID combination posted. The task of preparing an individualized secure repository is, in many cases, computationally intensive. Therefore, in a preferred embodiment there is a sufficient number of secure repository servers **100** to provide secure repositories to readers in real-time (e.g., a few seconds per activation), taking into account the expected volume of activation traffic.

The activation database **102** is preferably a MICROSOFT® SQL 7.0-based server that stores activation information related to each end-user of the reader **90** or **92** (based on their PASSPORT™ IDs). Such information may include: Machine IDs, the number of activated readers, the date of first activation, the product ID (PID) for each of the reader installations, their PASSPORT™ profile info, etc. This information is used to ensure that users are not abusing the system, helping users recover from hard-drive crashes, and aiding in allowing users to continue reading the content they purchased after a hardware upgrade. For example, the number of activated readers and the date of the first activation associated with a particular PASSPORT credential could be used to impose a limit on the number of activations (e.g., no more than five activations for a given persona in the first 90 days following the first activation, with an additional activation permitted each 90 days thereafter, up to a total of 10 activations). Imposing such a limit (or some other type of limit) has the effect of preventing the unchecked proliferation of readers activated to a single persona (which, in the worse case, could result in a level 5 title being readable on millions of reading devices, thereby thwarting the goal of controlling distribution of valuable content). Additionally, the other information in activation database **102** enables users to use level 5 titles after a hardware upgrade (or after a hard disk crash), without having to re-download titles or licenses. In this instance, all a user needs to do is to activate the reader on the upgraded (or repaired) hardware with the same PASSPORT™ ID.

Activation database server **102** is preferably located behind a firewall and is only accessible by the front-end activation IIS servers on the same private network where the secure repository servers are located. A replica of activation database **102** may be accessed via offline scripts to generate reports of the number of activations per day, week, month, average of activations per PASSPORT™ ID, etc.

Receipt Infrastructure

As described briefly above, the server architecture of the present invention includes a URL encryption object **74**, which encrypts certain parameters relating to the sale of an eBook **10**, where the encrypted parameters are includable in a URL. The following is a more detailed overview of the use of URL encryption object **74**.

URL encryption object **74** facilitates a decoupling of the seller of eBooks (e.g., the retailer) from the entity that actually provides the LIT file to the purchaser (e.g., a fulfillment center). The URL encryption object **74** performs this function by encrypting information relating to the purchased eBook with a secret (e.g., symmetric key **75**), which is shared between the fulfillment center and the retailer. In an exemplary scenario, the retailer enters into a business relationship (e.g., a contract) with a fulfillment center, whereby the fulfillment center agrees to provide content download services for the retailer who does not actually have an electronic stock of eBooks or the server devices needed to download eBooks to a large number of purchasers. As part of this relationship, the retailer and fulfillment center agree on a secret symmetric key **75**, which will be used by URL encryption object **74** on the retailer site, and by ISAPI extension DLL **78** on the fulfillment center site. Essentially, the retailer uses the URL encryption object **74** and the secret symmetric key **74** to encrypt information relating to the purchase of an eBook, and includes this encrypted information as a parameter to a URL that points to the fulfillment center site. The URL is then rendered on the purchaser's browsing software as a "receipt page," where the "receipt" is a hyperlink to the URL that invokes the download from the fulfillment center. When the user follows the link, the fulfillment center receives the encrypted parameter and decrypts it using shared secret symmetric key **75**. Because the parameter is encrypted, any secret information that needs to be exchanged between retailer and the fulfillment site can safely be provided in encrypted form to the purchaser's site, since the purchaser does not know the symmetric key **75** (and, presumably, other lurking eyes on the web also do not have access to symmetric key **75**). Moreover, when the fulfillment center decrypts the encrypted information to obtain the information necessary for the download, proper decryption of the information authenticates the "receipt" as having been generated by a legitimate retailer, since presumably no one other than the retailer has the symmetric key **75** necessary to properly create the encrypted parameter. It should be noted that symmetric key **75** is merely exemplary of the type of secret that could be shared between a retailer and a fulfillment center to permit this manner of communication. In an alternative embodiment, asymmetric key pairs could be used, or the retailer and fulfillment center could agree on a secret keyless encryption method.

FIG. **5** depicts the use of URL encryption object **74** to create the encrypted parameter. URL encryption object **74** encrypts the URL parameter using a symmetric key **75** (the URL "secret") that is shared between the download server ISAPI **78** and the URL encryption object **74** on the retail server. In a hosted scenario, where a fulfillment center provides for the download of LIT files sold by a large number of retail sites, a symmetric key **75** is provided to each retailer as they enter into a contract with the fulfillment center **73**. It is important to note that this symmetric key **75** can be unique per retailer **71**. Fulfillment center **73** may store the keys for each retailer in fulfillment database **89**. It should be noted that symmetric key **75** used for encryption of the URL parameter is different from the symmetric keys **14A** generated by the content management and encryption tool **82** to encrypt the LIT files.

A single exported method on the URL encryption object **74** ("Encrypt( )"), creates the encrypted URL parameters. Preferably, the Encrypt( ) method takes the following parameters to be incorporated into the encrypted blob that will be used in the URL:

TransactionID—a string that uniquely identifies each transaction on the bookstore site **72**;

BookID—a unique identifier, which is used by download server **76** to locate the proper LIT file via content store plug-in module **88** (which looks-up the BookID in fulfillment database **84**);

BookIDType—identifies which type the ID is (e.g. ISBN, DOI, PATH, etc.). URL encryption object **74** preferably does not validate this field, or its relationship to the ID. Download server ISAPI **78** later uses this field as an additional input parameter to the lookup performed by the content store plug-in module **88**;

UserName—a string containing the name of the rightful owner of the eBook purchased. This string preferably maps to the consumer listed in the credit card used for the commercial transaction, although this is left as policy to be set by the content source (e.g. the publisher) in accordance with the fulfillment center. This string is the name that will later by used by the Download Server ISAPI **78** to individually seal the titles (i.e. to generate the Bookplate). It will be recalled that individualized titles (e.g., level 3 and level 5) incorporate the user's name into the LIT file and bind that name to the decryption key, so that the origin of unauthorized distribution of content can be detected. Therefore, it is preferably that the purchaser's name come from a reliable source (such as the user's credit card), rather than from an unverifiable source (such as user input). Although the foregoing example assumes that a name will be inserted into this field, the actual contents of the field is determined by the retailer, and it could contain any information (e.g., credit card number, transaction ID, receipt ID, etc.)—preferably information that relates to the purchase or purchaser so as to permit surveillance and tracking of the copy;

PASSPORT ID—The persona ID associated with the user, which is provided by the user during activation. This field is later used by the content server to compare with the activation ID in the activation certificate. It should be noted that, while the PASSPORT ID is contained in the activation certificate, that ID is not uploaded to bookstore server **72** during the purchase transaction. Rather, the activation process, in addition to inserting the PASSPORT ID into the activation certificate, also stores the PASSPORT ID in the registry on the user's computing device, and it is the registry instance of the PASSPORT ID that is provided to bookstore server **72**; and

SecurityLevel—this string indicates what level of DRM this particular publication requires. This will later be converted into a number and stamped into the title's meta-data **12** by the download server ISAPI **78**;

Optionally, the following input parameters may also be included with a request:

Cost—the price that the merchant (i.e., retailer **71**) paid for that eBook title at the moment the tile was sold to the consumer;

MSRP—recommended price from the publisher at the moment the tile was sold;

Price—the price by which the eBook title was sold. This is an optional parameter, and if present will be used by the download server for logging purposes and, potentially, for billing purposes;

FriendlyFileName—this string is used by the download server when setting the filename for the LIT file being downloaded via the response HTTP header; and

CustomerID—a unique identifier for the end-user purchasing the eBook title. The merchant (i.e., retailer **71**) may require this information as part of the reports it receives from the fulfillment center.

The above parameter list is extensible and should not be interpreted as limiting or the full set supported by the URL encryption object **74**. Additional attribute-value pairs may be added, since the URL encryption object **74** will encrypt the whole set of values passed and returns them to the calling function.

Preferably, the URL encryption object **74** adds a timestamp and version. The timestamp is string which preferably contains a representation of the number of nanoseconds passed since 1601 (in GMT system time) on the local machine where the URL encryption object **74** is installed. This value may be used by the download server to calculate a time-to-live (TTL) in order to avoid playback attacks (i.e., someone stealing a URL and playing it back to download a book. The version field is an unencrypted string identifying the version of the URL encryption object **74** that created the encrypted blob in the URL.

After the retailer **71** obtains the encrypted string back from the URL encryption object **74**, the retailer **71** builds a POST request that points to the download server **76** for fulfillment. The encrypted blob returned by the URL encryption object **74** is included in the body of each POST. In addition to the encrypted parameters, retailers may need to provide a RetailerID in the URL which identifies the retailer. This may be used by the download server ISAPI DLL **78** to map the incoming request to the appropriate URL symmetric key **75** for decryption in the case where multiple retailers are being supported by a single download server site **76**. This is an optional field and if not provided, the download server ISAPI DLL **78** at the fulfillment site **73** will later use its default symmetric key **75** provided during setup for decrypting the URLs.

Therefore, in accordance with the above, assuming an input to the URL encryption object **74** such as:

TransactionId=
R6RAKHAL9TS12JTG00QP9ESTQ4&BookId=
044021145X&BookIdType=ISBN&Username=Pavel+
Zeman&SecurityLevel=3

The Encryption COM object **74** may return the following encrypted blob:

LCfsQCLuMg9UZtWxIdYTfw%2BzMtjXAN%2BiU0YH
aomrY3ydXhw3p9TlwZuH%2BFEHTEP687Nq17wb
MMwnbtHAkIjkKhKS%2BYKwgHj7%2FNr%2BvBD50
APwqMbvN3saNBrPxG8s1ziU1iX%2F%2BSS%2FttA%2
F4GZjRMo5uXWM%2BZr5dYHkSfWfBBC0iH7uLFo1y
Iz8 LSI=& Version=1.0

The URL encryption object **74** URL encodes the encrypted blob, such that it complies with the required HTTP standard for ANSI URLs. The URL encryption object **74** accepts both Unicode and UTF-**8** strings, and handles UTF-**8** conversion from Unicode internally. Optionally, the URL encryption object **74** use UTF-**8**, if provided, which reduces the size of the resulting encrypted end escaped blob for non-Unicode input by approximately one-half. The URL encryption object **74** preferably computes a cryptographic hash of the data to be encrypted prior to encrypting such data, and includes the hash with (e.g., in front of) the encrypted and encoded data. This hash may later be used for comparison by the download server to verify that the decrypted data has not been tampered with between the retail site and the download server. For example, the full parameter (e.g., to be included in the body of a POST request), may read:

VALUE="&Hash=bCt/xn41frJw7cPQjstge+6Lifc=
&Data=zAybPKW123d2O+ . . . encoded_data_
continues . . . MSSD8Eyw=&Version==1.5"

The download server ISAPI **78** is responsible for the individualization and download of eBook titles to end-users. Also, parsing and validation of each URL generated by the URL encryption object **74** is performed by the download server ISAPI DLL **78**. This includes decrypting the URL using the appropriate symmetric key **75**, which can be either a default key or, in the case where a retailer ID is provided, a string resulting from a database lookup via the content store plug-in module. The download server ISAPI DLL **78** also resolves the mapping of Book ID and Book ID Type from the passed URL into a file share location preferably via a plug-in module. The plug-in module retrieves that information from the fulfillment database and enables content providers to add their own mapping database and naming convention rules.

The download server ISAPI **78** also determines the DRM protection level required for the download of the requested LIT file. The level will be determined based on an indication from the fulfillment database **89** of the DRM Level for the title being downloaded. For example, if the URL created by the retailer defines a DRM level lower than that specified in the fulfillment database, an error message will be returned to the Retailer **71**. Also, the ISAPI will fetch the eBook title for download from the content store **80** into a local memory cache, if not cached, strip the symmetric key **14**A (see FIG. **1**) from the LIT file prior to caching it locally on the IIS server, and cache the key **14**A in memory for future use.

In the case of DRM level 3 titles, the download server ISAPI **78** inserts the user's name from the URL encrypted blob into the LIT file as a separate stream, re-hashes the meta-data with the contents of this new stream, seals the symmetric key **14**A with the newly computed cryptographic hash, and re-insert the newly sealed symmetric key into the LIT file for download. In the case of DRM level 5 titles, the download server ISAPI generates a license XML structure (in addition to the level 3 actions noted above), seals the symmetric key with the public key from the end-user's activation certificate, and embeds the license in the LIT file.

The download server ISAPI **78** also downloads the LIT file to the end-user, releases the temporary storage used during individualization of the LIT file, and logs each download request into either a local file on the IIS server or to the logging database **91**, via the asynchronous fulfillment pipeline discussed below. This may be performed via a message post to the local MSMQ client resident on each Download Server **76**.

The download server ISAPI extension DLL **78** responds to a set of commands defined by the "?action=" parameter. Preferably, there are two actions supported by the download server ISAPI **78**: download and verify. The download action is the command that causes the ISAPI **78** to follow the steps identified in FIG. **7** and return an eBook title to the user. The verify action is used to request the ISAPI **78** to verify that a given BookID exists in the content store **80** and is ready for download. The most common command (download) may look like the following URL:

http://content-provider.com/isapi/ds.dll?action=
download&value= . . .

The /isapi/parameter in the URL indicates the virtual root where the ISAPI **78** was installed. In this example the ISAPI **78** is called ds.dll (Download Server DLL). The name of

ISAPI **78** is followed by the action, which is followed by the relevant parameters to carry out that action (the "value" parameter in the above example). In this examples, the relevant parameters comprise the encrypted blob generated by the URL Encryption COM object **74**.

Each download request will include, in the body of the POST, the URL for the error-handling page on the retailer site **71**. The download server **76** uses this URL whenever an error occurs and redirects the client to that page, with the error code tagged in the query string. In the event of an error, the retailers may provide an HTML UI, a support number, an e-mail link, or trouble-shooting instructions. In accordance with an aspect of the present invention, the download server ISAPI DLL **78** preferably does not render errors, but rather, redirects the users to the required error handling URL from the POST request.

From a data-center management and operability standpoints, the ISAPI **78** will expose performance counters (i.e., PerfMon counters) and WINDOWS NT® events. These are typical WINDOWS® 2000 and WINDOWS NT® operational practices for data-center deployment and management of server components. WINDOWS® 2000 and WINDOWS NT® events are logged whenever an error occurs. Some of the key events that are preferably logged by the ISAPI **78** are:

Failure to Initialize—any missing configuration and/or required environment setting that caused the ISAPI to fail on load;

Failure to Connect to the Content Store—either the UNC path returned by the content store plug-in module was invalid or the content store **80** and/or network path to it is down. In either case, the ISAPI must log an error such that data center operators can take proper action;

Illegal URL Request—this event must be logged whenever a URL request does not comply with the expected format or has not been encrypted by the symmetric key **75** shared between the ISAPI **78** and the URL COM Object **74**. Ideally, the full URL should be posted on the event, along with the originating IP, for audit purposes;

Failure to locate a LIT file—either the path on the request was invalid or the LIT file is missing from the target share;

Failure to cache LIT file—this can happen if the content server **76** hosting the ISAPI **78** runs out of memory, or if a network problem occurred during file transmission from the Content Store **80**;

Failure to create Bookplate—this event must be logged anytime the ISAPI **78** is unable to carry out the individual sealing of the title. The nature of the error must be included on the event itself, for later debugging;

Failure to download title—this event must be logged whenever a download fails (time-out, connection broken, etc.); and

Startup/Shutdown events—whenever the ISAPI **78** is (un)loaded, it must log an informational event to this extent, such that proper visibility exists. There may be cases when an ISAPI **78** is unloaded by IIS and data center operators need to re-start IIS or even WINDOWS NT® to get the content server **76** back into a fully operational state.

The Download Server ISAPI **78** also preferably expose the following Performance Counters:

Total download requests—measured in unique requests accepted since last startup of the server;

Total successful downloads—measured in unique requests fulfilled since last startup of the server;

Download requests/sec—number of unique incoming requests/sec;

Successful downloads/sec—measured in unique requests fulfilled per second;

Pending download requests—total number of requests being processed at any given time;

Failed download requests—total number of failures since last startup of the server;

Average request processing time—measured in milliseconds, it reflects the average time the ISAPI is taking to process incoming requests; and

Last request processing time—measured in milliseconds, it reflects the time it took for the ISAPI to process its most recent request;

Combined, the WINDOWS NT® events and PerfMon counters will allow a host of existing data center monitoring and management suites to administer the ISAPI **78** during the deployment of the system.

Asynchronous Fulfillment Pipeline

The Asynchronous Fulfillment Pipeline performs asynchronous logging of download requests into the logging database **91** and asynchronous invalidations of cached entries by the download servers ISAPI DLL. The asynchronous fulfillment pipeline server accomplishes these tasks by leveraging the existing store-and-forward functionality provided by the MICROSOFT® Message Queue (MSMQ) component of Windows® 2000.

The architecture for the fulfillment pipeline is show in FIGS. **4** and **6**. The fulfillment pipeline object **87** is executed by the MSMQ trigger service and writes to the logging database each time an incoming message appears in the inbound queue of the local MSMQ client **86**. Preferably, fulfillment pipeline object **87** is implemented as a COM object. The cache update agent **85** has an associated executable that is spawned by a SQL trigger anytime an update or a delete operation occur on the fulfillment database **89**. The download server ISAPI extension DLL **78** will both read and write to/from the local MSMQ independent client **86**.

A logging function preferably runs on the logging database **91** to persist all parameters that are passed on the body of each POST request for downloads. The fulfillment pipeline COM object **87** is instantiated on the fulfillment server **84** as each individual logging message arrives in the inbound queue of the local MSMQ independent client **86** on the fulfillment server **84**. The logging database **91** schema is described in further detail below. The information from the body of each POST request to the download servers **76** is converted into a MSMQ message format and posted to the inbound queue of the local MSMQ client **86** on the fulfillment server **84**.

The MSMQ client **86** on the fulfillment server **76** then picks up this message packet and invokes, via the MSMQ

triggers service, the fulfillment pipeline COM object **87**, which converts the message to database format and writes it in the database, via a Data Source Name (DSN) on the fulfillment server **84** that abstracts the name, location, and login credentials for the logging database from the COM object.

As the content management tool **82** updates and/or deletes records from the fulfillment database **89**, a cache update agent executable **85** is triggered by the SQL server (using standard SQL update/delete triggers). Cache update agent **85** performs a similar function to the fulfillment pipeline COM object **87**, but in the opposite direction. Given that update and delete operations to the fulfillment database **89** may require cache updates to the front-end download server ISAPI DLLs **78**, this agent will form a MSMQ message and post it through the independent MSMQ client **86** to all the download servers **76** (the fulfillment server **84** should have a list of all installed download servers **76**).

On receiving the cache update message, the MSMQ client **86** on the download server **76** calls a function on the ISAPI extension DLL **78** to update the cache. This action removes the cache entry. The next time a request is received for this particular Book ID, the download server **76** will again query the fulfillment database **84** and then update the cache with the new LIT file and its relevant attributes. The size of the cache for the download server **76** is determined by the amount of free memory on the physical server. It is preferable that the ISAPI DLL **78** allocate up to 80% of the available memory on the server.

License Generation

Licenses are preferably generated for all signed and fully individualized titles (i.e., level 5). The source publication may also be accompanied by a license that constitutes the source signature, thus ensuring authenticity of the eBook being purchased by the consumer. Licenses can be delegated and the license chain preferably originates at the publication providers (i.e., authors and publishers) and ends at the buying consumer. In accordance with the present invention, rights may preferably be delegated by licensors but not by consumers. An end-user license is typically generated at the time of download. In some cases, the retailer will name the rightful owner of the eBook (in the case of individually sealing) in the license, which is later exposed via the UI (by a feature of the reader **90** or **92**) when consumers open their eBooks.

Referring now to FIGS. **4** and **7**, there is illustrated the process flow of license generation process. At step **110**, the process begins and the request (e.g., the request embodied in the encrypted URL blob) is parsed for attributes (step **112**). If the request is well formed at step **114**, then it is determined if the request is for a level 5 license (step **118**). If not, then at step **116**, an error is returned and the process is halted.

If at step **118** it is determined that the request is for a level 5 license, then it is determined at step **120** if the user principles were provided. If they were provided, then the principles are persisted in a local database at step **130**. If not, then at step **122**, it is determined if the user principles can be retrieved from a local database. If not, then they are fetched from the registration server at step **124**, and if successful (step **126**), the data is persisted in the local database at step **130**. If the request to fetch the data from the registration server failed at step **126**, then an event is logged (step **128**) and the process ends at step **146**.

If at step **122**, the user principles can be retrieved from the local database, then processing continues at step **132**, where the symmetric key is encrypted with the user's public key from the certificate. Step **132** is also performed after the user principles are persisted in the local database at step **130**. Processing then proceeds to step **134**, where it is determined if the license is individualized. Step **134** is also where processing continues if at step **118** it is determined that the request is not for a level 5 license.

If at step **134** the license is individualized, the user's name is included in the license as the rightful owner. Processing continues at step **136** where the license XML structure is completed with the user's name and signed. If at step **134**, the license is not individualized, process then continues at step **138** where the license XML structure is completed (without the user's name) and signed. At step **140** it is determined if the license generation succeeded. If so, then performance counters are updated and the license XML file is returned (step **144**), and, if not, an event is logged and error returned (step **142**). Processing then completes at step **146**.

Once a download is started at the fulfillment center **73** (i.e., users have placed an order and then clicked on the link to download), in the case of a fully individualized title the download server ISAPI DLL **78** preferably posts a request to the licensing module **77** to generate a unique license for the eBook title being downloaded. The download request URL must provide, as part of the encrypted parameters, information such that the license module can individually seal each license. These parameters include, for level 5 copies, the encrypted activation certificate downloaded to the end-user during activation of their reader software. A licensed eBook cannot be opened unless the required license is present and available to the reader.

After users purchase their eBook devices or download the reader software **90**, **92** from the Internet, they will be encouraged to activate their readers the first time it is launched (e.g., immediately after setup for the laptop/desktop reader application). Activation enables the reader software for the purchase of fully individualized, level 5 protected copies. The process-flow of reader activation, the end-user experience, and the client-server interactions that take place will now be described.

Each time reader **90** or **92** is launched, it checks to see whether it has been activated. If not, the reader will render a dialog box reminding the user that they will not be able to acquire premium titles that require full individualization for distribution unless the user activates the reader. Users may activate the reader from any retail web site, while shopping with a stand-alone browser, or from within an "integrated bookstore" feature of the reader (which permits communication with bookstore sites using the reader software itself instead of general-purpose browsing software). Still further, the reader may be activated from within a merchant's site, while shopping inside the integrated bookstore feature of the reader. This activation scenario may occur if, for example, the user declined to activate the reader during first launch

and now wants to purchase a fully individualized (level 5 protected) title, which requires activation.

Assuming the user has agreed to activate the reader as above, the process that follows will include the following steps, as illustrated with respect to FIGS. **4** and **8**.

At step **150**, the reader client opens into the integrated bookstore feature and connects, via secure sockets layer (SSL), to the activation servers **94**, where users are prompted to login using, in this example, their PASSPORT™ credentials (step **152**). If the user does not have a PASSPORT™ account, he/she will be provided with at link to sign-up for one (step **154**). It is preferable that the URL to the activation server **94** be hard-coded into an Activation ActiveX control using a SSL connection such that the client can guarantee that the servers are truly the activation servers **94**.

Once user's PASSPORT™ credentials are authenticated (step **156**), a PASSPORT™ API is queried for the user alias and e-mail address (step **158**). Thereafter, at steps **160–162**, the activation servers **94** will request that the client (via the ActiveX control) upload a unique hardware ID (e.g., which, as noted above, may be derived from hardware components on the user's computing device which substantially uniquely identify the user's computing device). Next, it is determined at step **164** if this is a new activation for the reader (as opposed to a "recovery" of a prior activation).

If it is determined that this is a new activation at step **164**, then the process proceeds to step **168** to determine whether an activation limit has been reached. If the limit has been reached, then an error message is rendered at step **172**, preferably including a support telephone number. The process then ends at step **198**. In accordance with a feature of the present invention, users may be limited as to the number of activations they can perform, and/or the rate at which they can perform them (i.e., how many different readers they can activate to read level 5 titles purchased under a given persona). In the example of FIG. **8**, users are limited to five activations within 90 days after the first activation of the reader. This allows the users to active their own readers, while preventing abuses of the DAS System. An example of the type of abuse that such a limit prevents would be a book club's purchasing an eBook with its PASSPORT account and permitting thousands of its members to activate their readers with the book club's PASSPORT credentials. The limit on activations may also allow for additional activations as time passes—e.g., one additional activation for each 90 day period after the first 90 days, up to a limit of 10 total activations. It will be appreciated that these limits are merely exemplary, and any limit on activations may be used without departing from the spirit and scope of the invention.

If the user has not activated over five readers within the first 90 days (or reached a different applicable activation limit), an activation page is rendered on the user's device (step **170**). When the user returns the form, the activation servers determine whether the form is complete (step **174**); if the form is not complete, the process returns to step **170** to re-render the form until the user completes the form. Next, at step **176**, it is determined if this activation is a recovery. If it is not a recovery, then a new record is created for the user and reader and the number of readers activated to that user is incremented (step **180**). A pre-generated secure repository key pair is retrieved from a database (step **182**) and activation certificates are also generated (step **184**). The activation keys, user ID, and machine ID are persisted in a database at step **186**. In one example, each user (i.e., persona, as identified by, e.g., PASSPORT account) is assigned an activation key pair which is used in the activation certificate for every reader that user activates, in which case the symmetric key **14**A of level 5 titles is encrypted with the public key in the activation key pair at the time the title is prepared for that user by fulfillment site **73**. In a further refinement of that example, each reading device is equipped with a unique, individualized secure repository that has a unique key pair associated therewith, where the activation certificate for a given device contains its private key in a form encrypted by the public key associated with the secure repository. In this way, in order to render a level 5 title it is necessary for both the secure repository and the activation certificate to be present, since the secure repository uses its private key to decrypt the private key of the activation certificate, which, in turn, is then used to decrypt the symmetric key **14**A of the eBook title, which, in turn, is used to decrypt the content stream **16** of the eBook title. Processing continues at step **188**.

If, at step **176**, it is determined that this activation is a recovery, then (at step **178**) activation certificates are generated with the information that was stored at step **186**, and processing continues at step **188**.

At step **188**, the activation servers generate and digitally sign an individualized secure repository executable (tied to the uploaded machine ID) and an activation certificate (tied to the user's PASSPORT™ ID). The secure repository executable and activation certificate are then downloaded to the client (steps **188** and **190**). The activation certificate is encrypted (for privacy reasons) and is later uploaded by the client to the download server for preparing fully individualized copies (level 5 protected titles). The user's PASSPORT™ ID may be encrypted and stamped in the PC Registry as part of this download, for upload during commercial transactions. This procedure may ensure that the PASSPORT™ ID included in the URL for download matches that of the activation certificate that's included in the body of the Post, to avoid theft of content.

At step **192** it is determined if the download was successful. If not, an event is logged and the download is attempted again (steps **194** and **192**). If the download was successful, then at step **196**, the user is provided with a "congratulations page" and is informed that activation is complete. The "congratulations page" may also provided a link to redeem promotional free books at this time, as a way to encourage users to activate their readers. This link may leverage a method exposed by the Activation ActiveX Control to return the user to a library page on the reader. The process then ends at step **198**.

It is preferable that once the reader connects to the activation servers **94**, that the servers **94** drive the entire user experience via ASP and HTML pages. These pages preferably conform to standard specification, and will use the style guide and java script methods provided to ensure a seamless experience this is consistent with the "look and feel" of the reader user interface.

Part of the activation process for the open platform reader (e.g., a reader software application installed on a PC) is the

secure repository individualization and subsequent download. As discussed in greater detail in Attorney's Docket No. MSFT-0126, filed concurrently herewith and incorporated herein by reference in its entirety, there is provided a server component (e.g., secure repository server **100**, shown in FIG. **4**) that is responsible for individualizing secure repository software modules to each instance of the reader for open platforms (e.g., laptop and desktop computers). The unique secure repository hides cryptographic keys used in the process of unsealing and decrypting level 5 LIT files, as well as ensuring that decrypted level 5 content does not escape from the controlled system, and, because it is individualized for a particular hardware installation, it resists portability and, should it be broken, its individualization resists using the same breaking techniques on a different secure repository installed on different hardware.

As noted above, one aspect of resisting abuse of the DRM System is to limit the number of activations that any particular user may have with a single PASSPORT™ ID. If this number is not limited, dishonest users may be able sign-up for a "public domain" PASSPORT™ then share the credentials for that account with all of their friends (or worse, post it on the Web), along with all eBooks they purchased. This will quickly create a piracy chain, since any user who activates the reader with the "public domain" PASSPORT credentials could then read level 5 titles individualized for that "public domain" account.

Therefore, in accordance with a feature of the invention, it is desirable to have activation "quotas" that allow users to activate readers on multiple devices that they own (e.g., a laptop, desktop, PocketPC, eBook, etc.) as well as allow them to activate new devices as they upgrade their hardware, reformat their hard disks, etc., without permitting unchecked and unlimited activations of readers to the same PASSPORT credentials. Past experience with user behavior suggests that legitimate users activate one reader (or a small number of readers) initially, and then may activate new readers occasionally but are not likely to activate new readers as often as every day or every week. To enable these legitimate uses of the activation system, while preventing abuse, the number of activations for a given user (a Passport™ ID) will be periodically increased, up to a defined maximum (which will be, e.g., five activations initially). As the user activates new devices, his quota of available activations goes down. As time passes, the number is increased, at a suggested rate of, e.g., one additional activation every 90 days (from the date of the first Activation) until the number reaches 10. This type of limit will allow users to activate readers (or reactivate, say, old readers on devices with reformatted hard disks) with a reasonable frequency, and will resist abuse of the system by "pirates."

The activation servers **94** enforce the limit on activations by storing, in the activation database **102**, a list of all activations that a given PASSPORT™ ID has requested, along with their date stamps. If a re-activation request is made, the quota is not affected, so long as the machine ID (e.g., the unique number that ties the secure repository to the hardware hosting the reader) is the same (since this would not result in theft, as the same PC is being activated again).

eCommerce Process Flow

An overview of the basic process by which eBook titles are acquired and delivered online is now described with reference to FIG. **9**. Using a browser or the "bookstore pages" or reader **90** or **92**, user chooses book(s) via mechanisms that the retail site implements (step **200**). The user then pays for the titles, if payment is required (step **202**). The transaction concludes at step **204** with a receipt page (i.e., an order confirmation or "thank you" page) that contains links (POST requests) for downloading each title purchased (i.e., the URLs containing the address of content server **76**, plus the encrypted information created by URL encryption object **74**). For fully individualized copies (level 5), a client-side script will populate the body of the POST with the activation certificate, preferably using COM object implemented by the reader which obtains the necessary activation certificate or relevant information therefrom.

Upon clicking on any of the links at step **206**, the browser initiates a download from content servers **76** (via the download server ISAPI DLL **78**). For individually sealed (bookplate (e.g., level 3)) copies, the download server **76** adds the consumer's name to the title meta-data and re-seal the symmetric key **14A** using a new cryptographic hash resulting from the new meta-data, which now includes the users name. For fully individualized copies (level 5) a license is generated and embedded in the LIT file, in addition to the Bookplate being created. This license contains the symmetric key **14A** that encrypted the LIT file "sealed" with the public key in the activation certificate. When the download is complete (step **208**), the download server **76** logs the transaction and, on the client, the reader is launched automatically (step **210**). The title may be moved into a "My Library" folder (e.g., on a PC using one of the MICROSOFT WINDOWS operating systems, such a folder might be called C:\MyLibrary, and would be reserved for the storage of LIT files). The eBook is opened to its over page and the rightful owner's name is rendered under the author's name.

The eCommerce process is further detailed in FIG. **10** with specific reference to the components of the DAS system: At step **1**, the client **90** or **92** makes a POST request to the download server ISAPI DLL **78**. The body of this post request will contain, at a minimum, the encrypted blob generated by the URL encryption object **74**. For fully individualized copies (level 5 protected) this post request will also contain the activation certificate required when sealing the XrML license (see below).

During step **2**, the ISAPI **78** extracts, from the body of the POST, the Retailer ID, which is required for fetching the symmetric key **75** associated with this retailer for decrypting the URL. It then decrypts and validates the download request. If the request is invalid and/or the TTL computed has expired (e.g., a possible play-back attack), the download server may redirect the browser back to the bookstore site. The bookstore site **71** should always be encapsulated in the HTTP REFERRER server variable. During this step, an optional friendly filename may be provided via the encrypted blob. This string, when returned, will be used by the ISAPI as the filename when downloading the LIT title to the end-user.

At step **3**, the ISAPI **78** passes the Book ID and Book ID type to the content store plug-in module, which then returns the physical location of the LIT file on the content store based on either a memory cache entry (if the LIT file being requested had been previously downloaded) or a lookup on the fulfillment database **89**.

At step **4**, if the Book ID is not found on the local memory cache of the ISAPI **78**, the LIT file is retrieved from the content store **80** and copied into the local memory cache of the ISAPI. When the ISAPI caches the LIT files locally, it strips the LIT files from their symmetric keys **14**A and stores them on a separate cache bucket, indexed by their respective ID, which may increase security.

At step **5** the ISAPI **78** will perform one of these possible steps in accordance with the DRM level required for the LIT file being downloaded:

If the request is for a DRM level 1 file, or the LIT file is not source sealed in the content store **80**, the IASPI preferably returns an error, indicating that the proper error condition (invalid request or an invalid title in the content store, respectively).

For source sealed (level 2) titles, the ISAPI return the file to the end-user, with no processing done on the file whatsoever. This is similar to downloading any other static file.

For individually sealed titles (level 3), the user's name will be inserted into a new stream in the LIT file, the meta-data stamped with level 3 (for use by the reader client **90** or **92**), the new meta-data is hashed, and the symmetric key **14**A used to encrypt the LIT file is sealed with the new cryptographic hash value computed.

For fully individualized titles (level 5), the ISAPI **78** will, in addition to generating the functions note above for level 3, post a request to the licensing module **77**, which will generate a license XrML blob, sign it with the fulfillment center's certificate, seal it with the end-user's activation public key, and return it for embedding in the LIT file.

For both levels 1 and 5, all processing is carried out in the temporary memory space created during step **4**. This memory space will be later discarded by the ISAPI, when the download is complete.

At step **6** the ISAPI DLL returns the LIT file to the IIS server **76** for download. If, during step **3**, the content store plug-in module returned a "Friendly Name" string, this value is used in the HTTP header as the filename to be stored in the user's machine.

At step **7** the LIT file is downloaded by IIS to the end-user via HTTP. When the download is complete, IIS will call back into the ISAPI DLL **78** to notify that the pending request was fulfilled and the connection closed. The ISAPI **78** will then purge all temporary memory used during step **5**.

At step **8**, the ISAPI DLL **78** will use the asynchronous fulfillment pipeline (via the local MSMQ Independent Client **86**) to log the transaction into the logging database **91** for later reporting and/or billing. This pipeline is also used to invalidate cache entries in the memory of the ISAPI asynchronously, such that any modifications to content store **80** performed by content management tool **82** will cause the ISAPI to invalidate the cached data and fall back to the plug-in module **88** (and subsequently the content store **80**) to retrieve the LIT file for the invalidated cache entry.

Once the eBook title has been downloaded to the client (after step **7**), the reader client may be launched. This is enabled via a file-extension association of LIT to the reader. The reader may move the file into the local library folder (e.g., "C:\MyLibrary") and open the book to its cover page, which for level 3 titles, clearly identifies the owner beneath the author's name.

Content Management Functionality

Once of the steps in securing the content in a DRM environment is the pre-encryption of the source files (LIT files) using symmetric keys **14**A generated by the encryption tool. This process enables the download server **76** to seal the symmetric key **14**A according to the requirements of each DRM Level. The fulfillment center **73** is responsible for populating the content store **80** according to their existing coding and cataloguing infrastructure. The fulfillment center **73** is also responsible for communicating the Book ID, Book ID Type, and their associated metadata to the retailers hosting bookstores that point to the content provider's site for fulfillment.

In accordance with a feature of the present invention, there may be independence between the download server **76** and the fulfillment center's content store servers **80**. Every Book ID/Book ID Type pair that comes on the URL provided by the retailers **71** will be resolved into a physical path to a LIT file via the content store plug-in module **88**, which can be customized by each fulfillment center **73**. This provides for maximum flexibility and scalability of the content store repository as well as the download server ISAPI DLL **78**.

A bookstore (retailer) database is populated with the Book IDs generated by a tool for managing the LIT files of a particular content provider's data center. This process is assumed to take place asynchronously and via contractual agreement between the retailer **71** and the content provider (fulfillment center) hosting the content servers **76**. These IDs will be provided to the download server ISAPI DLL **78** via the URL (in the encrypted portion of the URL).

Design Considerations

Exemplary schemas for the various tables used on the DAS Databases are described below. The exemplary schemas are not to be considered as limiting the present invention, as other schemas are possible.

Fulfillment Database

There are three tables in the exemplary fulfillment database. They include an DAS_Product table that contains all the information required to process a download request, an DAS_Registered_Retailers that contains all the information on retailers that are allowed to fulfill titles using this fulfillment installation of DAS, and an DAS_Licensor_Config that contains the required Licensor License provided by Microsoft for each DAS installation Partner. There are no relationships required between these tables; however, if table relationships are necessary, then each table's unique identifiers (primary keys) are used.

```
DAS_Product Table
(
    DAS_BookID_Path_Mapping_ID int   not null IDENTITY(1,1),
    BookID          varchar(256)  not null,                  -- example "0-201-63446-5"
    BookIDType      varchar(32)   not null,                  -- example "ISBN"
    Title           varchar(256)  not null,                  -- example "Tarzan of the Apes"
    Publisher       varchar(256)  not null,                  -- example "Ballantine Books"
    UNCPath         varchar(256)  not null,                  -- example "\\Store\tarzan.lit"
    Price           varchar(32)   not null,                  -- example "6.59"
    PriceStructure  varchar(32)   not null,                  -- example "Retail"
    Currency        varchar(10)   not null,                  -- example "USD"
    SecurityLevel   varchar(32)   not null,                  -- example "5"
    DateUpdated     datetime null DEFAULT (getDate( )),  -- last time row was updated
    DateCreated     datetime null DEFAULT (getDate( ))   -- time when row was created
)
```

DAS_Registered Retailers Table

This table contains the Retailer ID and secret string that is used when computing the symmetric key **75** used to encrypt/decrypt URLs for fulfillment. Each string must match the string used by the retailer when installing the URLEncrypt COM object, since that's how each download request is authenticated.

```
(
    DAS_Registered_Retailers_ID  int            not null IDENTITY(1,1),
    RetailerID                   varchar(256)   not null, -- example "Retailer-111-888"
    RetailerName                 varchar(256)   not null, -- example "Barnes & Noble"
    RetailerDesc                 varchar(4096)  not null, -- example "Book retailer"
    SharedSecret                 varchar(256)   not null, --example
"Making_eBooks_Happen"
    DateUpdated                  datetime null DEFAULT (getDate( )),
    DateCreated                  datetime null DEFAULT (getDate( ))
)
```

DAS_Licensor_Config Table

This table contains the configuration settings for the licensing component of the download server. When the server starts, the licensor's certificate and licensor's private key are read out of this table and used to generate Level 5 licenses for LIT files. It is preferable to store this information on the SQL server because the data is too large to be stored in the local registry of the download server, and because of security concerns that the private key of retailers may be compromised if stored in a flat file. It also allows for easy changes to the download server configuration parameters, since DAS partners only have to modify this table in the fulfillment database **89** and all download servers will pick-up the change (via the asynchronous fulfillment pipeline and messaging component), simplifying management.

```
(
    DAS_Licensor_Config_ID   int            not null IDENTITY(1,1),
    LicensorCertificate      varchar(4096)  not null, -- signed licensor's certificate
    LicensorPrivateKey       varbinary(350) not null, -- binary form of licensor's
private key
    DateUpdated              datetime null DEFAULT (getDate( )),
    DateCreated              datetime null DEFAULT (getDate( ))
)
```

Logging Database

The logging database **91** is used to log of all download requests. As the download servers process requests, the asynchronous fulfillment pipeline (based on MICROSOFT® Message Queue Server) is used to write, via a COM Object resident on the fulfillment database server, each message from the queue into the DAS_Log table. This will allow the DAS sites to audit their fulfillment, and determine how many downloads took place, and when, and what are the most frequently downloaded titles, etc. This table may also be used for billing purposes. The logging database comprises a single table (DAS_Log) that contains all the transaction logging records from downloaded titles.

```
(
    DAS_Log_ID          int          not null IDENTITY(1,1),
    BookId              varchar(64)  not null,  -- example "0-201-63446-5"
    BookIdType          varchar(32)  not null,  -- example "ISBN"
    SecurityLevel       varchar(32)  not null,  -- example "5"
    NameOfFile          varchar(256) not null,  -- example "Alice30.lit"
    CustomerID          varchar(256) not null,  -- example "34235433"
    UserName            varchar(256) not null,  -- example "Pavel Zeman"
    TransactionId       varchar(256) not null,  -- example "123-456-789"
    License             varchar(4096) null,          -- only for Level 5 content - text
of the License
    RetailPrice         varchar(32)  null,           -- example "$6.59"
    Cost                varchar(32)  null,           -- example "$5.59"
    MSRP                varchar(32)  null,           -- example "$7.59"
    DownloadAgent       varchar(256) null,           - example "Mozzilla"
    IPAdress            varchar(32)  null,           -- example "123.456.789.000"
    DateLogged          datetime null DEFAULT (getDate( ))
)
```

Activation Database

The activation database **102** hosts all the required information for activating readers as well as configuration information to operate the activation servers. There are five tables in the activation database. The Key_Pairs table holds the key pairs used when generating activation certificates. The Users table hosts the PASSPORT™ credentials for each activated user, along with the key pair ID (link into the Key_Pairs table) and date of first Activation. The Users-Devices is a list of all Hardware IDs (i.e., Machine IDs) activated by all users. In order to identify which machine is being referenced, this table has a primary-key constraint on UserNum (an internal representation of each user on the Users table) and MachID (the computed machine ID). The KeyPtr tracks the number of key pairs used from Key_Pairs table. It also points to the next available key pair to be used. The AS_DB_Config holds configuration elements for the database and the activation servers **94**.

```
            Key_Pairs Table
(
    ID_Key_Pair         int             not null UNIQUE IDENTITY(1,1),
    PublicKey           KeyValue        not null,
    PublicKeyXML        KeyValue        not null,
    PrivateKey          KeyValue        not null,
    BinaryPrivateKey    BinKeyValue     not null,
    AssignedToReader    tinyint         null DEFAULT(0),
                                      /* link to UsersDevices.ID_UsersDevice */
    DateAssigned        smalldatetime   null DEFAULT (NULL),
    DateCreated         smalldatetime   null DEFAULT (getDate( ))
)
Users Table
(
    UserNum             int                 not null UNIQUE IDENTITY(1,1),
    FullName            varchar(60)         null,
    Email               varchar(60)         null,
    UserId              varchar(60)         not null PRIMARY KEY,
    DateMade            smalldatetime       null DEFAULT (getDate( )),
    ID_KeyPair          int                 not null
)
UserDevices Table
(
    UsersDeviceNum      int                 not null UNIQUE IDENTITY(1,1),
    MachId              varchar(255)        not null,
    UserNum             int                 not null,
    DateRegistered      smalldatetime       null DEFAULT (getDate( )),
    ID_KeyPair          int                 not null,
    TimesRegistered     int                 null DEFAULT (0),
CONSTRAINT PC_UNQ PRIMARY KEY (UserNum, MachId)
)
KeyPtr Table
(
    NextKeyToUse        int                 not null
)
AS_DB_Config Table
(
            /* when number of free keys drop below this number a scheduled GenKey job is adding keys
*/
            MinKeysAvailable            int     not null,
            /* initially user can activate this many PCs */
            MaxPCperUser                int     not null,
            /* if user reached limit above, but this period has elapsed since his last Activation, user can add
```

-continued

```
one more */
            GrantExtraPCPeriodInDays        int        not null,
            /* to prevent DOS (denial of service) attacks by re-Activation of same PC over and over, this
can be set in production to a low value (e.g. 3), but test can set it to high for stress tests */
            MaxSamePCregistrations int          not null
)
```

DRM Storage within LIT files

Every LIT file is in effect a small file system, consisting of a collection of storage elements and their associated streams. At the root of every LIT file is a dedicated storage object for DRM. The sub-streams of the DRM storage object will vary depending on the DMR level via which the LIT file was distributed. In a level 5 protected LIT file, a Data Store contains the actual content of the eBook, and a DRMStorage Store contains all DRM-specific binary data. The DRMStorage Store will include ValidationStream, DRMSource, and DRMSealed streams (for Source and Individually Sealed copies). For fully individualized titles, the LIT file will also include the licenses stream, which includes one End-User-License (EUL).

License Format

Below is an exemplary License, which is used for every download of fully individualized titles. The license is a construct that defines the rights that the user can exercise upon purchase of the title, in addition to defining the requirements for unsealing the symmetric key to exercise those rights. Examples of "rights" that could be represented in the license are rendering the content (e.g., in the example of text content, reading it on the monitor of a PC), printing the content, or copying-and-pasting portions of the content. It is noted that the exemplary license format is not intended to limit the scope of the present invention as other license formats having greater or lesser information are possible, as are licenses having license information in different formats.

It is preferable that language chosen to represent a License is XML, and the format of the License is based on the Extended Rights Markup Language (XrML) specification. This is a well-suited markup language to describe usage rights in a flexible manner. XrML also provides for great interoperability and may allow for any technology investments made on components that generate and manage these licenses to be leveraged long-term. In a preferred embodiment, only those expressed in the license are granted to the license—i.e., if a right is not expressly granted, it is denied. However, it will be appreciated by those skilled in the art that other arrangements are possible, such as where a default set of rights is presumed unless expressly denied or modified by the license.

The top-level tags in a collapsed format are as follows:

```
<?xml version="1.0" ?>
    <!DOCTYPE XrML SYSTEM "xrml.dtd">
    - <XrML>
      - <BODY type="LICENSE" version="2.0">
          <ISSUED>2000-01-27T15:30</ISSUED>
        + <DESCRIPTOR>
        - <!-- ================================== -->
        - <!-- Licensed Book                      -
          ->
```

-continued

```
        - <!-- ================================== -->
        + <WORK>
          ==========================================
            ==
              Components of the book
              One chapter, and one image with digest value
          ==========================================
            ==
          ==========================================
            ==
                    Usage rights of the book
          ==========================================
            ==
        - <!-- ================================== -->
        - <!-- Licensor of the book
          -->
        - <!-- ================================== -->
        + <LICENSOR>
        - <!-- ================================== -->
        - <!-- Licensees of the book                -
          ->
        - <!-- ================================== -->
        + <LICENSEDPRINCIPALS>
        </BODY>
      - <!-- ================================== -->
      - <!-- Signature of the License Body                -->
      - <!-- ================================== -->
      + <SIGNATURE>
</XrML>
```

The first line of the XrML structure above defines the version of the XML language used to create the XrML License. The second line specifies the name of the DTD file used to parse the XML file. The BODY tag provides the type of license, the version of the XrML specification used when the license was generated, and the date when it was issued. It is also the meta-tag for the whole license, which has the following sub-sections: WORK, LICENSOR, LICENSEDPRINCIPALS, and SIGNTURE. WORK contains all the semantic information about the license, including the usage RIGHTS. The contents of this field (including the tags) constitute the data that is hashed and signed. LICENSOR contains information pertaining the entity that issued the license, usually a retailer. LICENSEDPRINCIPALS contains a series of principals that must be authenticated when exercising the usage rights specified in a license. SIGNATURE contains the hash/digest of the LICENSE-BODY as well as information about how the hash was created, including the algorithm used. It also includes the DIGEST encoded in accordance with the algorithm named by the Licensor when issuing the License. The DIGEST and SIGNATURE tags provide the authentication information used to validate the entire license in a way that cannot be tampered with.

Structure of the BODY Tag

The main tag of an XrML License construct is the BODY tag, which contains the following tags:

```
= <BODY type="LICENSE" version="2.0">
    <ISSUED>2000-01-27T15:30</ISSUED>
  = <DESCRIPTOR>
    = <OBJECT type="self-proving-EUL">
      <ID type="MS-GUID">7BD394EA-C841-434d-A33F-
          5456D5E2AAAE</ID>
      </OBJECT>
    </DESCRIPTOR>
  - <!-- ==================================== -->
  - <!-- Licensed Book                          -->
  - <!-- ==================================== -->
  = <WORK>
  = <OBJECT type="BOOK-LIT-FORMAT">
      <ID type="ISBN">8374-39384-38472</ID>
      <NAME>A book of James</NAME>
    </OBJECT>
    <CREATOR type="author">James the first</CREATOR>
        <CREATOR type="author">James the
    second</CREATOR>
  = <OWNER>
    = <OBJECT type="Person">
        <ID type="US-SSN">103-74-8843</ID>
        <NAME>Mike the man</NAME>
        <ADDRESS
          type="email">mike@man.com</ADDRESS>
      </OBJECT>
    = <PUBLICKEY>
        <ALGORITHM>RSA-512</ALGORITHM>
      = <PARAMETER name="public exponent">
                                    <VALUE
          encoding="integer32">65537</VALUE>
        </PARAMETER>
      = <PARAMETER name="modulus">
                <VALUE encoding="base64"
          size="512">u+aEb/WqgyO+aDjgYLxwrk
          tqFDR4HZeIeR1g+G5vmKNZRt9FH4oueP
          Wz/AJYnn2NdxoJ6mcIIAQVe6Droj2fxA=
          =</VALUE>
        </PARAMETER>
      </PUBLICKEY>
    </OWNER>
  - <!-- ==================================== -->
  - <!-- Components of the book                 -->
  - <!-- One chapter, and one image with digest value -->
  - <!-- ==================================== -->
  = <PARTS>
    = <WORK>
      = <OBJECT type="Chapter">
          <ID type="relative">0</ID>
          <NAME>Chapter 1</NAME>
      </OBJECT>
      </WORK>
    = <WORK>
      = <OBJECT type="Image">
          <ID type="relative">1</ID>
            <NAME>Image 1: Photon Celebshots
              Dogs</NAME>
        </OBJECT>
      = <DIGEST sourcedata="LicensorMeta">
          <ALGORITHM>SHA1</ALGORITHM>
        = <PARAMETER name="codingtype">
            <VALUE encoding="string">surface-
              coding</VALUE>
          </PARAMETER>
                <VALUE encoding="base64"
          size="160">OtSrhD5GrzxMeFEm8q4pQl
          CKWHI=</VALUE>
        </DIGEST>
      </WORK>
    </PARTS>
  - <!-- ==================================== -->
  - <!-- Usage rights of the book               -->
  - <!-- ==================================== -->
  = <RIGHTSGROUP name="Main Rights">
```

-continued

```
    <DESCRIPTION>Some desc</DESCRIPTION>
  = <BUNDLE>
    = <TIME>
        <FROM time="2000-01-27T15:30" />
        <UNTIL time="2000-01-27T15:30" />
      </TIME>
    = <ACCESS>
      = <PRINCIPAL sequence="2">
        = <ENABLINGBITS type="sealed-des-
          key">
          <VALUE encoding="base64"
            size="512">InHtn/t2dp3u+ZqL
            kbd7MKOK4xR4YdSXaEvuk2Loh
            9ZRJEcPzCw+xM7zbPrJb6ESj70
            +B2fWTcxxDD+6WUB/Lw==</
            VALUE>
        </ENABLINGBITS>
      </PRINCIPAL>
    </ACCESS>
  </BUNDLE>
= <RIGHTSLIST>
  = <VIEW>
    = <ACCESS>
      = <PRINCIPAL sequence="2">
        = <ENABLINGBITS type="sealed-
            des-key">
            <VALUE encoding="base64"
              size="512">InHtn/t2dp3u
              +ZqLkbd7MKOK4xR4YdSX
              aEvuk2Loh9ZRJEcPzCw+x
              M7zbPrJb6ESj70+B2fWTcx
              xDD+6WUB/Lw==</VALU
              E>
        </ENABLINGBITS>
      </PRINCIPAL>
      <PRINCIPAL sequence="3" />
    </ACCESS>
  = <ACCESS>
    = <PRINCIPAL type="licensor">
      = <ENABLINGBITS type="sealed-
          des-key">
          <VALUE encoding="base64"
            size="512">InHtn/t2dp3u
            +ZqLkbd7MKOK4xR4YdSX
            aEvuk2Loh9ZRJEcPzCw+x
            M7zbPrJb6ESj70+B2fWTcx
            xDD+6WUB/Lw==</VALU
            E>
        </ENABLINGBITS>
      </PRINCIPAL>
    </ACCESS>
  </VIEW>
= <PRINT maxcount="5">
  = <FEE>
    = <MONETARY>
      = <PERUSE value="5.00">
          <CURRENCY iso-code="USD"
            />
        </PERUSE>
      = <ACCOUNT>
          <ACCOUNTFROM id="BA-
            0234-0928392" />
          <HOUSE id="XYZ"
            url="http://somehouse.co
            m/payme.asp" />
        </ACCOUNT>
      </MONETARY>
    </FEE>
  = <TRACK>
      <PROVIDERNAME>e-
          tracker</PROVIDERNAME>
      <PROVIDERID id="US1023"
        type="Tracker ID"/>
    = <PARAMETER name="tracking
        address">
        <VALUE
          encoding="url">"http://sometr
              ackingservice/trackme.asp"> </
              VALUE>
```

-continued

```
            </PARAMETER>
          = <PARAMETER name="tracking support
              address">
              <VALUE
                encoding="url">"http://sometr
                ackingservice/supportme.asp">
                </VALUE>
            </PARAMETER>
          </TRACK>
        = <TERRITORY>
            <LOCATION country="us" state="CA"
              city="El Segundo"
              postalcode="90245" />
            <LOCATION country="jp" />
          </TERRITORY>
        </PRINT>
      </RIGHTSLIST>
    </RIGHTSGROUP>
  </WORK>
- <!-- ==================================== -->
- <!-- Licensor of the book                 -->
- <!-- ==================================== -->
= <LICENSOR>
  = <OBJECT type="Principal-Certificate">
      <ID type="MS-GUID">7BD394EA-C841-434d-A33F-
        5456D5E2AAAE</ID>
      <NAME>Barnes and Noble</NAME>
    </OBJECT>
  = <PUBLICKEY>
      <ALGORITHM>RSA-512</ALGORITHM>
    = <PARAMETER name="public exponent">
        <VALUE
          encoding="integer32">65537</VALUE>
      </PARAMETER>
    = <PARAMETER name="modulus">
        <VALUE encoding="base64"
          size="512">u+aEb/WqgyO+aDjgYLxwrktqFD
          R4HZeIeR1g+G5vmKNZRt9FH4ouePWz/AJYn
          n2NdxoJ6mcIIAQVe6Droj2fxA==</VALUE>
      </PARAMETER>
    </PUBLICKEY>
  </LICENSOR>
- <!-- ==================================== -->
- <!-- Licensees of the book                -->
- <!-- ==================================== -->
= <LICENSEDPRINCIPALS>
  = <PRINCIPAL>
    = <OBJECT type="program">
        <ID type="msprogid">XrML.interpreter</ID>
        <NAME>DRPL INTERPRETER</NAME>
      </OBJECT>
    = <AUTHENTICATOR type="drm-module-verifier">
        <ID type="microsoft-
          progid">ms.drm.authenticode</ID>
        <NAME>DRMAuthenticode</NAME>
      = <AUTHENTICATIONCLASS>
          <VERSIONSPAN min="2.0" max="3.4" />
          <VERSION>5.0</VERSION>
          <SECURITYLEVEL>5</SECURITYLEVEL>
        </AUTHENTICATIONCLASS>
      = <VERIFICATIONDATA type="signature-key">
        = <PUBLICKEY>
            <ALGORITHM>RSA-
              512</ALGORITHM>
          = <PARAMETER name="public
              exponent">
              <VALUE
                encoding="Integer32">65537<
                /VALUE
            </PARAMETER>
          = <PARAMETER name="modulus">
              <VALUE encoding="base64"
                size="512">u+aEb/WqgyO+aD
                jgYLxwrktqFDR4HZeIeR1g+G5
                vmKNZRt9FH4ouePWz/AJYnn2
                NdxoJ6mcIIAQVe6Droj2fxA==
                </VALUE>
            </PARAMETER>
          </PUBLICKEY>
        </VERIFICATIONDATA>
      </AUTHENTICATOR>
    </PRINCIPAL>
  = <PRINCIPAL>
    = <OBJECT type="MS Ebook Device">
        <ID type="INTEL SN">Intel PII 92840-AA9-
          39849-00</ID>
        <NAME>Johns Computer</NAME>
      </OBJECT>
    = <AUTHENTICATOR type="drminternal-certverify-
        program">
      <ID type="microsoft-progid">2323-2324-abcd-
        93a1</ID>
      = <AUTHENTICATIONCLASS>
          <VERSION>1.x-2.5</VERSION>
        </AUTHENTICATIONCLASS>
      = <VERIFICATIONDATA type="authenticode-
          named-root">
        = <PUBLICKEY>
            <ALGORITHM>RSA-
              512</ALGORITHM>
          = <PARAMETER name="public
              exponent">
              <VALUE
                encoding="integer32">65537<
                /VALUE>
            </PARAMETER>
          = <PARAMETER name="modulus">
            <VALUE encoding="base64"
              size="512">u+aEb/WqgyO+aD
              jgYLxwrktqFDR4HZeIeR1g+G5
              vmKNZRt9FH4ouePWz/AJYnn2
              NdxoJ6mcIIAQVe6Droj2fxA==
              </VALUE>
            </PARAMETER>
          </PUBLICKEY>
        </VERIFICATIONDATA>
      = <VERIFICATIONDATA>
        = <PARAMETER name="bbid">
            <VALUE
              encoding="string">xxzzy</VALUE>
          </PARAMETER>
        = <PUBLICKEY>
            <ALGORITM>RSA-
              512</ALGORITHM>
          = <PARAMETER name="public
              exponent">
              <VALUE
                encoding="integer32">3</VAL
                UE>
            </PARAMETER>
          = <PARAMETER name="modulus">
              <VALUE encoding="base64"
                size="90">33845URT203987=
                =</VALUE>
            </PARAMETER>
          </PUBLICKEY>
        </VERIFICATIONDATA>
            </AUTHENTICATOR>
          </PRINCIPAL>
        = <PRINCIPAL>
          = <OBJECT type="application">
              <ID type="MS PROG-
                ID">43984938476jshd</ID>
              <NAME>MS Book Reader 2.0</NAME>
            </OBJECT>
          = <AUTHENTICATOR type="drminternal-digest-
              program">
            <ID type="microsoft-progid">2323-2324-abcd-
              93a1</ID>
          = <AUTHENTICATIONCLASS>
              <VERSION>1.x-2.5</VERSION>
            </AUTHENTICATIONCLASS>
          = <VERIFICATIONDATA type="authenticode-
              named-root">
          = <DIGEST>
              <ALGORITHM>MD5</ALGORITHM>
              <VALUE encoding="base64"
                size="90">bXlwYXNzd29yZA==</V
```

-continued

```
                ALUE>
              </DIGEST>
            </VERIFICATIONDATA>
          </AUTHENTICATOR>
        </PRINCIPAL>
      </LICENSEPRINCIPALS>
</BODY>
```

License Authenticity

As mentioned before, the reader secure repository authenticates a license via the SIGNATURE and DIGEST tags. This is such that the client software can validate that the content being rendered came from a trusted source. A more detailed example of these tags is provided below:

```
- <!--   ==========================================
        Signature of the License Body
        ==============================================
-->
- <SIGNATURE>
    - <DIGEST>
        <ALGORITHM>SHA1</ALGORITHM>
      - <PARAMETER name="codingtype">
            <VALUE      encoding="string">surface-
          coding</VALUE>
      </PARAMETER>
      <VALUE encoding="base64"
        size="160">OtSrhD5GrzxMeFEm8q4pQlCKWHI=<
        /VALUE>
    </DIGEST>
    <VALUE encoding="base64"
      size="512">A7qsNTFT2roeL6eP+IDQFwjIz5XSFBV+NB
      FOeNa7de+1D6n+MPJa3J7ki8Dmwmuu/pBciQnJ4xGaq
      RZ5AYoWRQ==</VALUE>
</SIGNATURE>
```

DRM System Content Sources Scenarios

The source content is preferably distributed in Open eBook ("OEB") format, which will be later customized by the Retailer to each target Reader. The OEB format is specified in the document entitled Open eBook™ Publication Structure 1.0, dated Sep. 16, 1999, which available at http://www.openebook.org/specification.htm and is expressly incorporated herein by reference in its entirety.

Content Sources Scenarios

Within the context of the DRM System, content sources (authors and/or publishers) of eBooks are expected to provide either open (i.e., unsealed) or sealed copies that are ready for sale. In order to be distributed by the server described below, publishers must provide copies that have been at a minimum source sealed, or alternatively, the publishers may optionally provide source OEB/HTML files that the merchant/distributor will encrypt and store for fulfillment. The content sources may also provide a separate file (e.g., XML, text, database script, etc.) that will provide merchant-specific information about each title being distributed which will be used by the merchant/distributor to populate their fulfillment databases. Such information may include the desired DRM level, pricing, teaser, etc.

Because there is an expectation that a trust relationship between publishers and retailers is preferably maintained contractually and not technologically, it is generally not necessary to encryption and/or sealing titles between publishers and merchants/distributors. Such a relationship provides for a simpler deployment. If, however, added security is a concern, the present invention provides for titles that may be encrypted when transferred between publishers and merchants/distributors.

In accordance with the present invention, publishers may distribute the content to retailers via one of delivery of portable mass-storage medium (CDs, DVDs, etc.); secure FTP servers in either the publisher or the merchant/distributor site; secure HTTPS (SSL) on either the publisher or the merchant/distributor site; and secure dedicated network connections between the publisher and the merchant/distributor sites.

Merchant/Distributor Scenarios

Several non-limiting distribution scenarios will now be described. The scenarios are intended to provide examples of the of sales to customers, and is not intended to limit the present invention as other scenarios are possible.

Sales of Source Sealed Copies

After the buying customer has selected the titles he/she wishes to purchase and decides to complete an order, the merchant will process the order according to their existing methods (e.g., credit card validation, billing, etc.). This may include requiring the users to authenticate themselves (for those which require a membership record from their customers) or simply fill out an order form. The merchant will next generate and download a receipt (electronic proof-of-purchase) to the buying customer. As noted above, it is preferable that the electronic receipt include all the information required to enable the user to later download the titles they purchased via a mechanism such as a URL that points to the content server **76** and contains the encrypted blob generated by the URL encryption object. Once the user clicks on the URL included in the electronic receipt for downloading the title purchased, the server listed in that URL (i.e., the fulfillment or content server) downloads the referenced title to the purchaser. The content/download servers **76** may validate that the order was indeed placed by the user attempting to download the title.

As previously mentioned, source sealed copies may indelibly include the name of the publisher and/or author and any other rights that have been delegated to the merchant as part of the distribution process. The merchant/distributor uses tools to encrypt the title with a symmetric key **14A** provided by those tools. These same tools will encrypt the symmetric key **14A** with a cryptographic hash of the title's meta-data and embed the encrypted symmetric key **14A** in a separate stream in the title. When the reader software opens these titles, it will apply the same algorithm used by the tool to decrypt the symmetric key and then use it to decrypt the content. It is noted that titles purchased in this manner may be easily re-distributed by the end-users (e.g., by posting the LIT file on the Web, or by saving it on magnetic disk **29** or optical disk **31** and sending the disk to another user); thus it is recommended that the merchant provide warnings regarding illegal distribution in every receipt. The owners of titles sold this way are encouraged to include copyright information as part of the publication.

Sales of Individually Sealed Copies

Similar to source sealed copies, individually sealed copies (e.g., level 3) require the retailer to name the rightful owner of the title in the meta-data, and then seal the symmetric key **14A** used for encryption/decryption of the content with a

new cryptographic hash of the new meta-data, which now includes the owner's name. This advantageously makes the meta-data tamper-resistant, since any attempt to change the meta-data (e.g., remove the rightful owner's name so that the rightful owner could distribute the copies and escape detection) would cause any attempt to unseal the symmetric key **14A** to fail, because the wrong cryptographic hash would result. However, like unsigned and unsealed copies, and like source sealed copies, these titles do not provide any pro-active copy protection; instead, individually-sealed copies protect the owner's rights in the works by relying on the deterrent effect that a user whose name is bound to the copy and who engaged in illegal distribution of the copy could be easily discovered.

In the scenario, the retailer generally provides the consumer's name, as it appears on his/her credit card, as a parameter on each download URL included in the receipt (i.e., proof of purchase) page/e-mail. This information is used by the download servers **76** during fulfillment to add the user's name to the meta-data. Use of the name associated with a credit card is preferably, because, assuming that the credit card is not stolen, it is a reliable source of the user's name; if the name provided by the retailer is based on, say, user input, there is a greater danger that the user would enter a fake name that would not serve the goal of binding the user's real name to the copy.

Sales of Signed Copies

Signed copies (e.g., level 4) are titles that include a digital signature, which was provided by the content source (author and/or publisher) at the time the title was generated. This is the mechanism used to provide authenticatable copies, by having the data in the LIT file (or a portion thereof) signed by various entities in the distribution chain. Level 4 can be combined with other levels—e.g., it is possible to combine source signing with either level 3 or level 5 individualization in order to create a title that is both authenticatable and copy-resistant (or, in the case of level 3, copy-"deterred").

Sales of Fully Individualized Copies

Fully individualized copies differ from individually sealed titles in that at the time of fulfillment, the merchant/distributor must always seal the license by encrypting the symmetric key **14A** to the end-user's public key in the end-user's activation certificate. The public key's authenticity is attested to by the activation certificate, which is signed by the activation servers **94**. A merchant may request the signed activation certificate the first time a particular consumer purchases any fully individualized title. Optionally, merchants could request such certificate on every transaction, if the user does not have a membership or other relationship with the merchant. The encrypted activation certificate is provided to a retailer by a client component of the DRM system, which can be scripted to via any web page. This certificate is encrypted to protect the privacy of the consumer as well as reduce the risk of playback attacks and/or hacking. It is preferable that merchants store the encrypted activation certificate on their sites for future transactions.

Titles sold as fully individualized copies may only be opened on the purchasing consumer's reader(s) and cannot be distributed openly. As part of the process of selling fully individualized titles, merchants may detect whether the end-user's reader has been activated, which is a requirement for downloading such titles. If a merchant detects that a reader is not activated, the merchant may advise the reader that activation is necessary to open a fully individualized title. In the case where the merchant does not store a particular user's activation certificate, it would not even be possible to provide a fully individualized title for that user. In the case where the merchant stores the activation certificate, the merchant may, for example, detect that the reader installed on the user's device through which the user is purchasing the title has not been activated (although that user may have other activated readers), in which case the merchant may provide the title to the user, but may advise the user that they must activate the new device in order to use the title on that device (subject, of course, to any applicable limit on activations).

It is noted that the foregoing examples have been provided merely for the purpose of explanation and are in no way to be construed as limiting of the present invention. While the invention has been described with reference to various embodiments, it is understood that the words which have been used herein are words of description and illustration, rather than words of limitations. Further, although the invention has been described herein with reference to particular means, materials and embodiments, the invention is not intended to be limited to the particulars disclosed herein; rather, the invention extends to all functionally equivalent structures, methods and uses, such as are within the scope of the appended claims. Those skilled in the art, having the benefit of the teachings of this specification, may effect numerous modifications thereto and changes may be made without departing from the scope and spirit of the invention in its aspects.

What is claimed:

1. A method of enabling the use of an item on plural computing devices, said method comprising the acts of:

providing, to a first computing device associated with a persona, first data which enables the use of said item on said first computing device; and

determining that a second computing device is associated with said persona; and

providing to said second computing device second data which enables the use of said item on said second computing device,

wherein said first data differs in at least some respect from said second data, wherein said first data comprises a first cryptographic key which enables the use of said item, said first cryptographic key being included in said first data in a form encrypted by a second cryptographic key, and wherein said second data comprises said first cryptographic key in a form encrypted by a third cryptographic key different from said second cryptographic key, wherein said item comprises encrypted content and a decryption key which decrypts said encrypted content, and wherein said decryption key is encrypted so as to be decryptable by said first cryptographic key, wherein said first data further comprises a fourth cryptographic key, wherein said second data further comprises said fourth cryptographic key, wherein said first and fourth cryptographic keys are the private and public keys, respectively, of an asymmetric key pair, and wherein said decryption key is included in said item in a form encrypted by said fourth cryptographic key, and wherein the method further comprises the acts of:

providing to said first computing device a first set of computer-executable instructions which applies said second cryptographic key; and

providing to said second computing device a second set of computer-executable instructions which applies said third cryptographic key.

2. A computer-readable medium encoded with computer-executable instructions to perform a method of enabling the use of an item on plural computing devices, said method comprising the acts of:

providing, to a first computing device associated with a persona, first data which enables the use of said item on said first computing device; and

determining that a second computing device is associated with said persona; and

providing to said second computing device second data which enables the use of said item on said second computing device,

wherein said first data differs in at least some respect from said second data, wherein said first data comprises a first cryptographic key which enables the use of said item, said first cryptographic key being included in said first data in a form encrypted by a second cryptographic key, and wherein said second data comprises said first cryptographic key in a form encrypted by a third cryptographic key different from said second cryptographic key, wherein said item comprises encrypted content and a decryption key which decrypts said encrypted content, and wherein said decryption key is encrypted so as to be decryptable by said first cryptographic key, wherein said first data further comprises a fourth cryptographic key, wherein said second data further comprises said fourth cryptographic key, wherein said first and fourth cryptographic keys are the private and public keys, respectively, of an asymmetric key pair, and wherein said decryption key is included in said item in a form encrypted by said fourth cryptographic key, and wherein the method further comprises the acts of:

providing to said first computing device a first set of computer-executable instructions which applies said second cryptographic key; and

providing to said second computing device a second set of computer-executable instructions which applies said third cryptographic key.

* * * * *