US007058974B1

(12) **United States Patent**
Maher, III et al.

(10) **Patent No.: US 7,058,974 B1**
(45) **Date of Patent: Jun. 6, 2006**

(54) **METHOD AND APPARATUS FOR PREVENTING DENIAL OF SERVICE ATTACKS**

(75) Inventors: **Robert Daniel Maher, III**, Plano, TX (US); **Victor A. Bennett**, Rockwall, TX (US)

(73) Assignee: **Netrake Corporation**, Plano, TX (US)

(*) Notice: Subject to any disclaimer, the term of this patent is extended or adjusted under 35 U.S.C. 154(b) by 1030 days.

(21) Appl. No.: **09/598,631**

(22) Filed: **Jun. 21, 2000**

(51) **Int. Cl.**
G06F 11/00 (2006.01)
G06F 11/22 (2006.01)
G06F 11/30 (2006.01)
G06F 11/32 (2006.01)

(52) **U.S. Cl.** **726/13**; 726/23; 713/189; 370/229

(58) **Field of Classification Search** 713/201, 713/200, 154; 706/47; 370/474; 726/22, 726/23–26
See application file for complete search history.

(56) **References Cited**

U.S. PATENT DOCUMENTS

5,813,001 A 9/1998 Bennett
6,477,669 B1 * 11/2002 Agarwal et al. 714/708
6,598,034 B1 * 7/2003 Kloth 706/47
6,636,512 B1 * 10/2003 Lorrain et al. 370/392
6,654,373 B1 * 11/2003 Maher et al. 370/392
6,735,219 B1 * 5/2004 Clauberg 370/474

* cited by examiner

Primary Examiner—Gilberto Barron, Jr.
Assistant Examiner—Samson Lemma
(74) *Attorney, Agent, or Firm*—Haynes and Boone, LLP

(57) **ABSTRACT**

A method and apparatus for preventing denial of service type attacks on data networks is described. The method involves scanning the contents of the data packets flowing over the data network using a traffic flow scanning engine. The data packets are reordered and reassembled and then the payload contents are scanned to determine whether they conform to predetermined requirements. Data packets which do not reorder or reassemble correctly or which do not conform to the predetermined requirements may be dropped. Dropping packets which do not reorder or reassemble correctly or which do not conform to the predetermined requirements prevent denial of service attack which exploit bugs in the TCP/IP implementation or shortcomings in the TCP/IP specification The traffic flow scanning engine is further operable to determine whether the data packets are associated with validated traffic flows. Those data packets associated with validated traffic flows are assigned to a higher priority while those not associated with a validated traffic flow are assigned to a low priority, which may occupy no more that a predetermined maximum of the available bandwidth. Assigning data packets associated with a non-validated traffic flow to a low priority prevent brute force type denial of service attacks designed to clog networks.

16 Claims, 6 Drawing Sheets

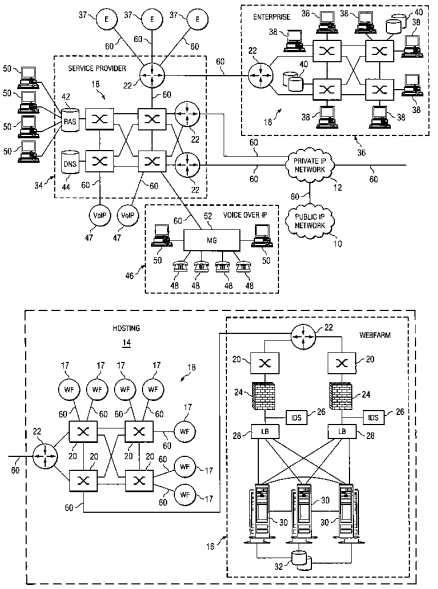

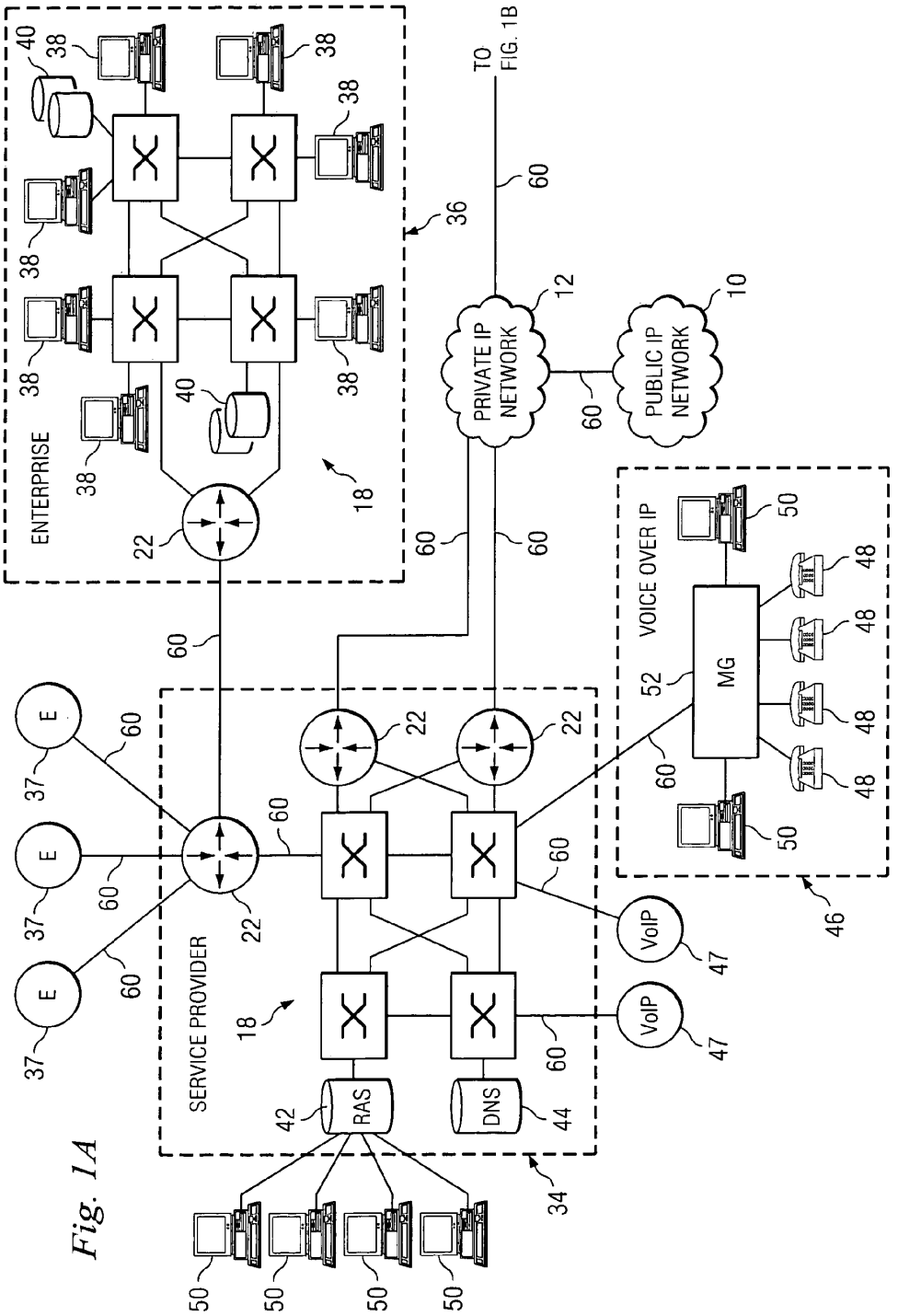
ENTERPRISE
SERVICE PROVIDER
VOICE OVER IP
PRIVATE IP NETWORK
PUBLIC IP NETWORK
TO FIG. 1B
RAS
DNS
MG
VoIP
E

Fig. 1A

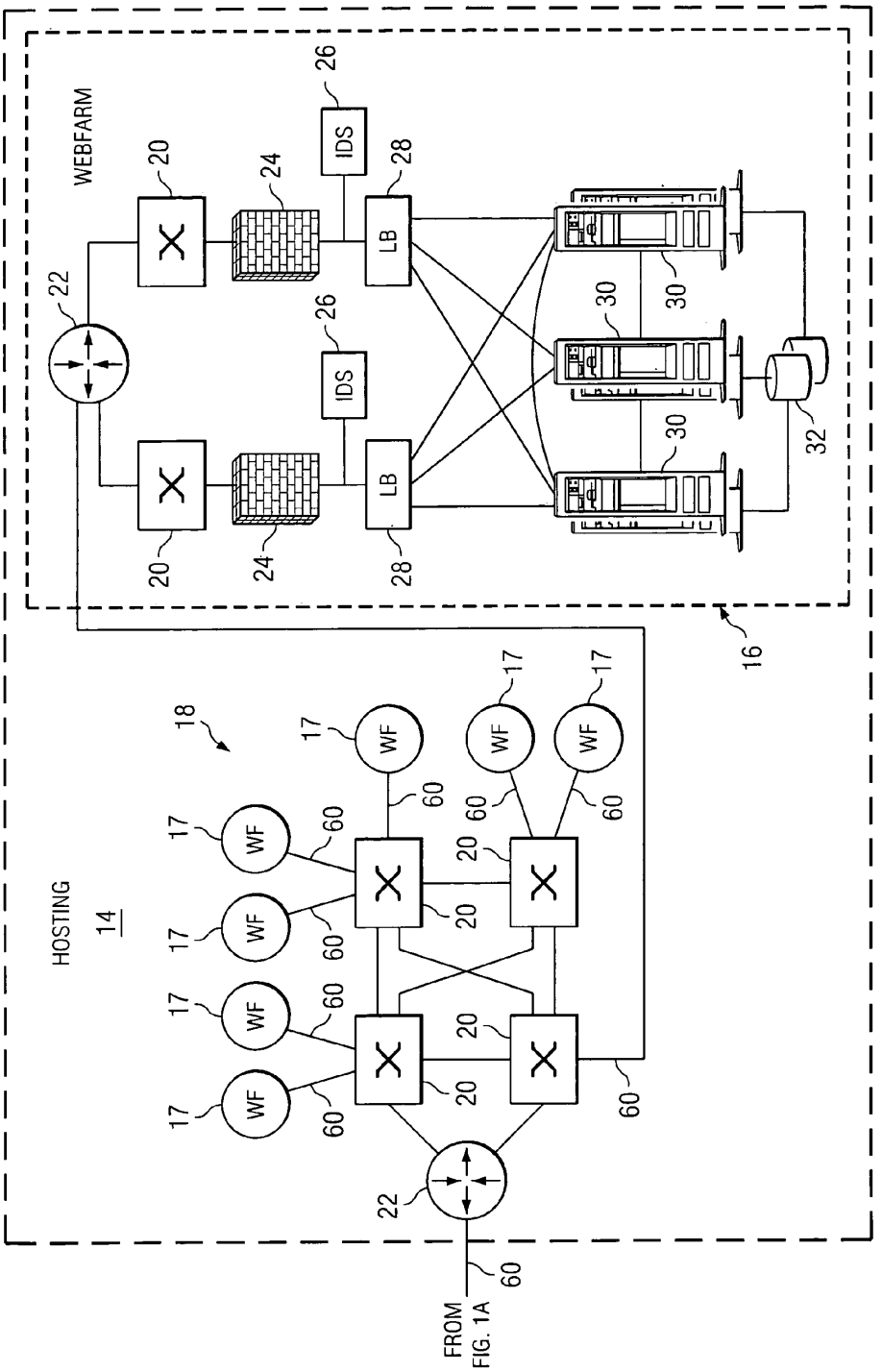
WEBFARM
HOSTING
14
16
18
20
22
24
26
28
30
32
17
60
IDS
LB
WF
FROM
FIG. 1A

Fig. 1B

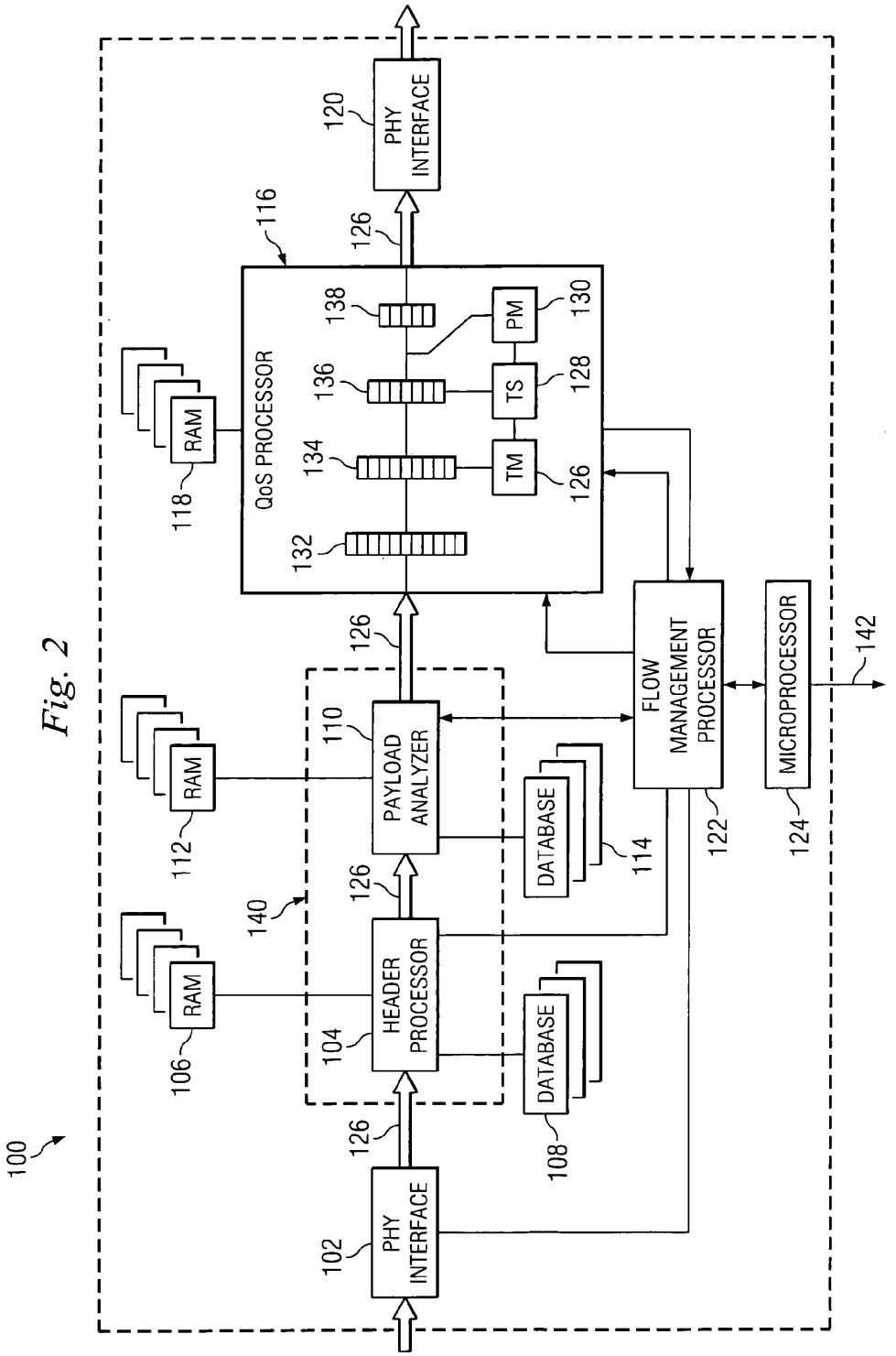
100
PHY INTERFACE
102
126
HEADER PROCESSOR
104
RAM
106
DATABASE
108
PAYLOAD ANALYZER
110
RAM
112
DATABASE
114
140
QoS PROCESSOR
116
RAM
118
PHY INTERFACE
120
FLOW MANAGEMENT PROCESSOR
122
MICROPROCESSOR
124
TM
126
TS
128
PM
130
132
134
136
138
142

Fig. 2

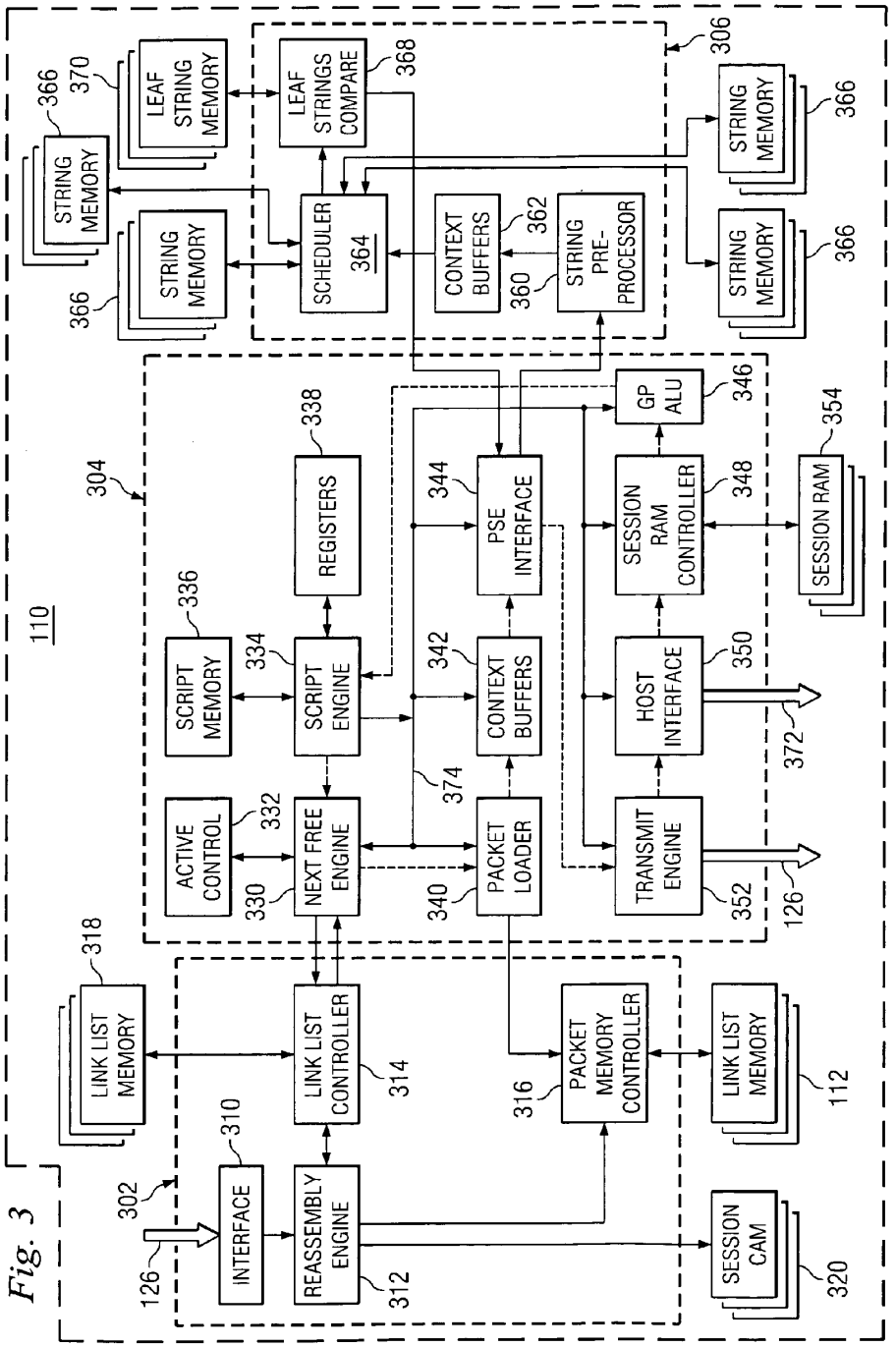
110
302
126
INTERFACE
310
REASSEMBLY ENGINE
312
LINK LIST CONTROLLER
314
LINK LIST MEMORY
318
PACKET MEMORY CONTROLLER
316
LINK LIST MEMORY
112
SESSION CAM
320
304
ACTIVE CONTROL
330
332
NEXT FREE ENGINE
SCRIPT MEMORY
336
334
SCRIPT ENGINE
REGISTERS
338
PACKET LOADER
340
374
CONTEXT BUFFERS
342
PSE INTERFACE
344
TRANSMIT ENGINE
352
126
HOST INTERFACE
350
372
SESSION RAM CONTROLLER
348
GP ALU
346
SESSION RAM
354
306
SCHEDULER
364
LEAF STRINGS COMPARE
368
CONTEXT BUFFERS
362
360
STRING PRE-PROCESSOR
STRING MEMORY
366
LEAF STRING MEMORY
370
STRING MEMORY
366
STRING MEMORY
366
STRING MEMORY
366

Fig. 3

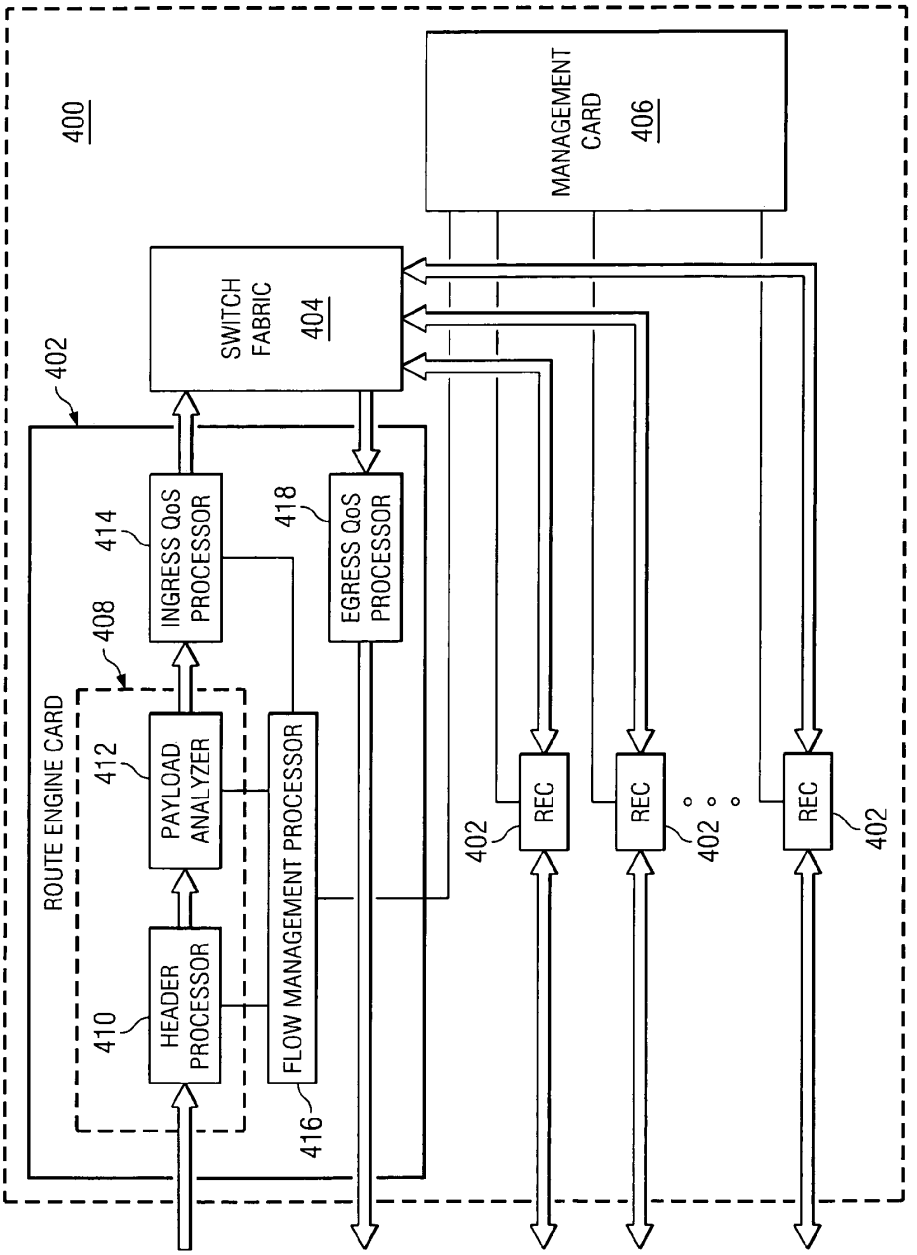
400
402
ROUTE ENGINE CARD
408
410
HEADER PROCESSOR
412
PAYLOAD ANALYZER
414
INGRESS QoS PROCESSOR
416
FLOW MANAGEMENT PROCESSOR
418
EGRESS QoS PROCESSOR
SWITCH FABRIC
404
MANAGEMENT CARD
406
REC
REC
REC
402
402
402

Fig. 4

Fig. 5

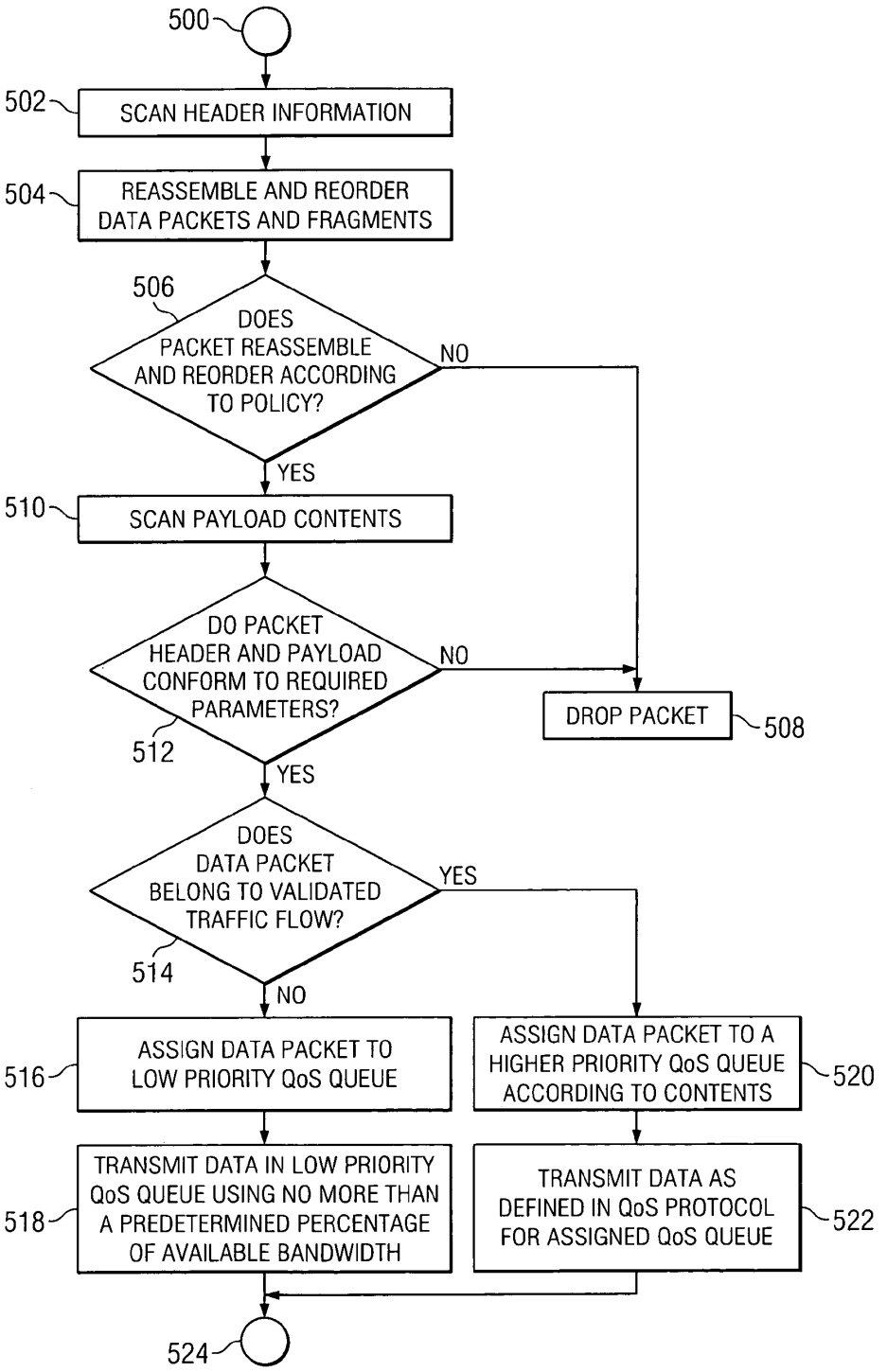
500
502
SCAN HEADER INFORMATION
504
REASSEMBLE AND REORDER DATA PACKETS AND FRAGMENTS
506
DOES PACKET REASSEMBLE AND REORDER ACCORDING TO POLICY?
NO
YES
510
SCAN PAYLOAD CONTENTS
DO PACKET HEADER AND PAYLOAD CONFORM TO REQUIRED PARAMETERS?
NO
DROP PACKET
508
512
YES
DOES DATA PACKET BELONG TO VALIDATED TRAFFIC FLOW?
YES
514
NO
516
ASSIGN DATA PACKET TO LOW PRIORITY QoS QUEUE
ASSIGN DATA PACKET TO A HIGHER PRIORITY QoS QUEUE ACCORDING TO CONTENTS
520
518
TRANSMIT DATA IN LOW PRIORITY QoS QUEUE USING NO MORE THAN A PREDETERMINED PERCENTAGE OF AVAILABLE BANDWIDTH
TRANSMIT DATA AS DEFINED IN QoS PROTOCOL FOR ASSIGNED QoS QUEUE
522
524

METHOD AND APPARATUS FOR PREVENTING DENIAL OF SERVICE ATTACKS

TECHNICAL FIELD OF THE INVENTION

The present invention relates to broadband data networking equipment. Specifically, the present invention relates to a method and device that prevents denial of service type internet attacks.

BACKGROUND OF THE INVENTION

A "denial of service" (DoS) attack is characterized by an explicit attempt by attackers to prevent legitimate users of a service from using that service. DoS attacks are aimed at devices and networks with exposure to the Internet. Their goal is to cripple a device or network so that external users no longer have access to network resources. Without hacking password files or stealing sensitive data, a denial-of-service hacker simply fires up a program that will generate enough traffic to a particular site that it denies service to the site's legitimate users.

There are three types of DoS attacks: those that exploit a bug in a TCP/IP implementation, those that exploit a shortcoming in the TCP/IP specification, and brute-force attacks that clog up the network with so much useless traffic that no other traffic can get in or out.

Two lethal attacks, the well-known Ping of Death and the newer Teardrop attack, exploit known bugs in TCP/IP implementations. The Ping of Death uses a ping system utility to create an IP packet that exceeds the maximum 65,536 bytes of data allowed by the IP specification. The oversize packet is then sent to an unsuspecting system. Systems may crash, hang, or reboot when they receive such a maliciously crafted packet.

The recently developed Teardrop attack exploits weaknesses in the reassembly of IP packet fragments. During its journey through the Internet, an IP packet may be broken up into smaller chunks. Each fragment looks like the original IP packet except that it contains an offset field that says, for instance, "This fragment is carrying bytes **600** through **800** of the original (nonfragmented) IP packet." The Teardrop program creates a series of IP fragments with overlapping offset fields. When these fragments are reassembled at the destination host, some systems will crash, hang, or reboot.

Weaknesses in the TCP/IP specification leave hosts open to SYN attacks, executed during the three-way handshake that kicks off a TCP conversation between two applications. Under normal circumstances, the application that initiates a TCP session sends a TCP SYN synchronization packet to the receiving application. The receiver sends back a TCP SYN-ACK acknowledgment packet and then the initiator responds with an ACK acknowledgment. After this handshake, the applications are set to send and receive data.

But a SYN attack floods a targeted system with a series of TCP SYN packets. Each packet causes the targeted system to issue a SYN-ACK response. While the targeted system waits for the ACK that follows the SYN-ACK, it queues up all outstanding SYN-ACK responses on what is known as a backlog queue. This backlog queue has a finite length that is usually quite small. Once the queue is full, the system will either ignore all incoming SYN requests, or more likely crash. SYN-ACKs are moved off the queue only when an ACK comes back or when an internal timer (which is set at relatively long intervals) terminates the three-way handshake.

A SYN attack creates each SYN packet in the flood with a bad source IP address, which under routine procedure identifies the original packet. All responses are sent to the source IP address. But a bad source IP address either does not actually exist or is down; therefore the ACK that should follow a SYN-ACK response will never come back. This creates a backlog queue that's always full, making it nearly impossible for legitimate TCP SYN requests to get into the system.

In a Land attack—a simple hybrid of the SYN attack—hackers flood SYN packets into the network with a spoofed source IP address of the targeted system.

A lot more dangerous than any initiative launched by their cartoon namesakes, the Smurf attack is a brute-force attack targeted at a feature in the IP specification known as direct broadcast addressing. A Smurf hacker floods the router of the victim with Internet Control Message Protocol (ICMP) echo request packets (pings). Since the destination IP address of each packet is the broadcast address of the victim's network, the victim's router will broadcast the ICMP echo request packet to all hosts on its network. If the victim has numerous hosts, this will create a large amount of ICMP echo request and response traffic.

If a hacker chooses to spoof the source IP address of the ICMP echo request packet, the resulting ICMP traffic will not only clog up the primary victim's network—the "intermediary" network—but will also congest the network of the spoofed source IP address—known as the "secondary victim" network.

The User Datagram Protocol (UDP) Flood denial-of-service attack also links two unsuspecting systems. By spoofing, the UDP Flood attack hooks up one system's UDP chargen service, which for testing purposes generates a series of characters for each packet it receives, with another system's UDP echo service, which echoes any character it receives in an attempt to test network programs. As a result, a nonstop flood of useless data passes between the two systems.

Prevention of a UDP Flood, can be accomplished by either disabling all UDP services on each host in the network or by having a firewall filter all incoming UDP service requests. However, categorically denying all UDP traffic, you will rebuff legitimate applications, such as RealAudio, that use UDP as their transport mechanism.

Accordingly, what is needed is a method of preventing DoS attacks and a network device that can perform that method in order to prevent DoS attacks from disrupting entire networks.

SUMMARY OF THE INVENTION

The present invention provides for a method of preventing DoS attacks. The method involves scanning the contents of the data packets then verifying that the contents of the data packets conform to a set of predetermined requirements, the predetermined requirement including reordering and reassembling data packets according to a defined policy and insuring that they conform to required parameters such as packet length, non-overlapping offsets, and adherence to protocol standards. Data Packets that do not verify may be dropped.

After the contents have been verified, the data packets are checked to determine if they are associated with a validated traffic flow. If the data packet is associated with a validated traffic flow it is assigned to a higher priority quality of service for transmission back onto the network. If the data packet is not associated with a validated traffic flow it is

assigned to a low priority quality of service queue, such that data packets in the low priority quality of service queue can occupy no more that a predetermined maximum of the available network bandwidth when they are transmitted back onto the network.

The present invention also includes a network device for preventing DoS attacks. The network device includes a traffic flow scanning engine and a quality of service processor. The traffic flow scanning engine is operable to scan the contents of the data packets, including the header and the payload, and to associate the data packets with particular traffic flows. The traffic flow scanning engine is also operable to determine whether each traffic flow is a validated or non-validated. Further, the traffic flow scanning engine reorders and reassembles the data packets and associated traffic flows and insures that the data packets conform to predetermined requirements. The network device may drop packets that do not reorder or reassemble correctly or which do not conform to the predetermined requirements. Once the traffic flow scanning engine has scanned the data packet it produces a conclusion associated with that data packet, both of which are passed to the quality of service processor.

The quality of service processor uses the conclusion from the traffic flow scanning engine to place the data packets in the appropriate quality of service queue. Data packets associated with validated traffic flow are placed in higher priority queues and transmitted back onto the network according to the protocol for the particular queue. Data packets not assigned to a validated traffic flow are placed in low priority QoS queue. Data packets in the low priority QoS queue are transmitted onto the network such that they occupy no more than a predetermined maximum of available bandwidth, thereby preventing flood type DoS attacks.

The foregoing has outlined, rather broadly, preferred and alternative features of the present invention so that those skilled in the art may better understand the detailed description of the invention that follows. Additional features of the invention will be described hereinafter that form the subject of the claims of the invention. Those skilled in the art will appreciate that they can readily use the disclosed conception and specific embodiment as a basis for designing or modifying other structures for carrying out the same purposes of the present invention. Those skilled in the art will also realize that such equivalent constructions do not depart from the spirit and scope of the invention in its broadest form.

BRIEF DESCRIPTION OF THE DRAWINGS

For a more complete understanding of the present invention, reference is now made to the following descriptions taken in conjunction with the accompanying drawings, in which:

FIGS. **1***a* and **1***b* is a network topology diagram illustrating example environments in which the present invention can operate;

FIG. **2** is a block diagram of a "bump-in-the-line" network apparatus according to the present invention;

FIG. **3** is a block diagram of the payload scanning engine from FIG. **2**;

FIG. **4** is a block diagram of a routing network apparatus according to the present invention; and

FIG. **5** is a flow chart illustrating a method according to the present invention for preventing denial of service attacks.

DETAILED DESCRIPTION OF THE DRAWINGS

Referring now to FIGS. **1***a* and **1***b*, a network topology is shown which is an example of several network infrastructures that connect in some manner to a broader public IP network **10** such as the internet. FIGS. **1***a* and **1***b* is in no way meant to be a precise network architecture, but only to serve as a rough illustration of a variety of network structures which can exist on a broadband IP network. Public IP network **10** can be accessed in a variety of ways. FIGS. **1***a* and **1***b* shows the public IP network being accessed through a private IP network **12** which can be the IP network of a company such as MCI or UUNET which provide private core networks. An endless variety of network structures can be connected to private IP network **12** in order to access other networks connected to private IP network **12** or to access public IP network **10**.

One example of a network structure connecting to private IP network **12** is hosting network **14**. Hosting network **14** is an example of a network structure that provides hosting services for internet websites. These hosting services can be in the form of webfarm **16**. Webfarm **16** begins with webservers **30** and database **32** which contain the webpages, programs and databases associated with a particular website such as amazon.com or yahoo.com. Webservers **30** connect to redundant load balancers **28** which receive incoming internet traffic and assign it to a particular webserver to balance the loads across all of webservers **30**. Redundant intrusion detection systems **26** and firewalls connect to load balancers **28** and provide security for webfarm **16**. Individual webfarms **16** and **17** connect to hosting network **14**'s switched backbone **18** by means of a network of switches **20** and routers **22**. Hosting network **14**'s switched backbone **18** is itself made up of a network of switches **20** which then connect to one or more routers **22** to connect to private IP network **12**. Connections between individual webfarms **16** and **17** and the switched backbone **18** of hosting network **14** are usually made at speeds such as OC-3 or OC-12 (approx. 150 megabits/sec or 625 megabits/sec), while the connection from router **22** of hosting network **14** to private IP network **12** are on the order OC-48 speeds (approx. 2.5 gigabits/sec).

Another example of network structures connecting to private IP network are illustrated with service provider network **34**. Service provider network **34** is an example of a network structure for Internet Service Providers (ISPs) or Local Exchange Carriers (LECs) to provide both data and voice access to private IP network **12** and public IP network **10**. Service provider network **34** provides services such as internet and intranet access for enterprise networks **36** and **37**. Enterprise networks **36** and **37** are, for example, company networks such as the company network for Lucent Technologies or Merril Lynch. Each enterprise network, such as enterprise network **36**, includes a plurality of network servers and individual workstations connected to a switched backbone **18**, which can be connected by routers **22** to service provider network **34**.

In addition to internet access for enterprise networks, service provider network **34** provides dial-up internet access for individuals or small businesses. Dial-up access is provided in service provider network **34** by remote access server (RAS) **42**, which allows personal computers (PCs) to call into service provider network **34** through the public switched telephone network (PSTN), not shown. Once a connection has been made between the PC **50** and RAS **42** through the PSTN, PC **50** can then access the private or public IP networks **12** and **10**.

Service provider network **34** also provides the ability to use the internet to provide voice calls over a data network referred to as Voice over IP (VoIP). VoIP networks **46** and **47** allow IP phones **48** and PCs **50** equipped with the proper software to make telephone calls to other phones, or PCs connected to the internet or even to regular phones connected to the PSTN. VoIP networks, such as VoIP network **46**, include media gateways **52** and other equipment, not shown, to collect and concentrate the VoIP calls which are sent through service provider network **34** and private and public internet **12** and **10** as required. As mentioned, the advent of VoIP as well as other real time services such as video over the internet make quality of service a priority for service providers in order to match the traditional telephone service provided by traditional telephone companies.

Service provider network **34** includes a switched backbone **18** formed by switches **20** as well as routers **22** between it and its end users and between it and private IP network **12**. Domain name servers **44** and other networking equipment, which are not shown, are also included in service provider network **34**. Similar to hosting network **34**, connection speeds for service provider network **34** can range from speeds such as T1, T3, OC-3 and OC-12 for connecting to enterprise networks **36** and **37** as well as VoIP networks **46** and **47** all the way to OC-48 and conceivably even OC-192 for connections to the private IP network.

It can easily be seen that aggregation points **60** exist at the edges of these various network structures where data is passed from one network structure to another at speeds such as OC-3, OC-12, and OC-48. One major problem in the network structures shown in FIG. **1** is the lack on any type of intelligence at these aggregation points **60** which would allow the network to provide services such as security, metering and quality of service. The intelligence to provide these services would require that the network understand the type of data passing through the aggregation points **60** and not just the destination and/or source information which is currently all that is understood. Understanding the type of data, or its contents, including the contents of the associated payloads as well as header information, and further understanding and maintaining a state awareness across each individual traffic flow would allow the network to configure itself in real time to bandwidth requirements on the network for applications such as VoIP or video where quality of service is a fundamental requirement. An intelligent, or "content aware", network would also be able to identify and filter out security problems such as email worms, viruses, denial of service (DoS) attacks, and illegal hacking in a manner that would be transparent to end users. Further, a content aware network would provide for metering capabilities by hosting companies and service providers, allowing these companies to regulate the amount of bandwidth allotted to individual customers as well as to charge precisely for bandwidth and additional features such as security.

In accordance with the requirements set forth above, the present invention provides for a network device that is able to scan, classify, and modify network traffic including payload information at speeds of OC-3, OC-12, OC-48 and greater thereby providing a "content aware" network capable of preventing denial of service attacks on the network.

Referring now to FIG. **2**, one embodiment of a network apparatus according to the present invention is shown. Network apparatus **100**, as shown, acts as a "bump-in-the-line" type device by accepting data received from a high-speed network line, processing the data, and then placing the data back on the line. Network apparatus **100** accepts data from the line by means of input physical interface **102**. Input physical interface **102** can consist of a plurality of ports, and can accept any number of network speeds and protocols, including such high speeds as OC-3, OC-12, OC-48, and protocols including 10/100 Ethernet, gigabit Ethernet, and SONET. Input physical interface **102** takes the data from the physical ports, frames the data, and then formats the data for placement on fast-path data bus **126** which is preferably an industry standard data bus such as a POS-PHY Level 3, or an ATM UTOPIA Level 3 type data bus.

Fast-path data bus **126** feeds the data to traffic flow scanning processor **140**, which includes header processor **104** and payload analyzer **110**. The data is first sent to header processor **104**, which is operable to perform several operations using information contained in the data packet headers. Header processor **104** stores the received data packets in packet storage memory **106** and scans the header information. The header information is scanned to identify the type, or protocol, of the data packet, which is used to determine routing information as well as to create a session id using predetermined attributes of the data packet.

In the preferred embodiment, a session id is created using session information consisting of the source address, destination address, source port, destination port and protocol, although one skilled in the art would understand that a session id could be created using any subset of fields listed or any additional fields in the data packet without departing from the scope of the present invention. When a data packet is received that has new session information the header processor creates a unique session id to identify that particular traffic flow. Each successive data packet with the same session information is assigned the same session id to identify each packet within that flow. Session ids are retired when the particular traffic flow is ended through an explicit action, or when the traffic flow times out, meaning that a data packet for that traffic flow has not been received within a predetermined amount of time. While the session id is discussed herein as being created by the header processor **104** the session id can be created anywhere in traffic flow scanning engine **140** including in payload analyzer **110**.

As will be discussed below, network apparatus **100** in order to function properly needs to reorder out of order data packets and reassemble data packet fragments. Header processor **104** is operable to perform the assembly of asynchronous transfer mode (ATM) cells into complete data packets (PDUs), which could include the stripping of ATM header information.

Header processor **104** is also operable to perform routing functions. Routing tables and information can be stored in database memory **108**. Routing instructions received by network apparatus **100** are identified, recorded and passed to microprocessor **124** by header processor **104** so that microprocessor **124** is able to update the routing tables in database memory **108** accordingly. While network apparatus **100** is referred to as a "bump-in-the-line" apparatus, The input and the output could be formed by multiple lines, for example four OC-12 lines could be connected to network apparatus **100** which operates at OC-48 speeds. In such a case, "bump-in-the-line" network apparatus **100** will have limited routing or switching capabilities between the multiple lines, although the switching capability will be less than in a conventional router or switch. Additionally, a network apparatus can be constructed according to the principles of the present invention, which is able to operate as a network router or switch. Such an implementation is discussed in greater detail with reference to FIG. **4**.

After data packets have been processed by header processor **104** the data packets, their associated session id and any conclusion formed by the header processor, such as routing or QoS information, are sent on fast-data path **126** to the other half of traffic flow scanning engine **140**, payload analyzer **110**. The received packets are stored in packet storage memory **112** while they are processed by payload analyzer **110**. Payload analyzer **110** is operable to scan the contents of data packets received from header processor **104**, particularly the payload contents of the data packets, although header information can also be scanned as required. The contents of any or all data packets are compared to a database of known signatures and if the contents of a data packet or packets matches a known signature, an action associated with that signature and/or session id can be taken by network apparatus **100**. Additionally, payload analyzer **110** is operable to maintain state awareness throughout each individual traffic flow. In other words, payload analyzer **110** maintains a database for each session which stores state information related to not only the current data packets from a traffic flow, but state information related to the entirety of the traffic flow. This allows network apparatus **100** to act on not only based on the content of the data packets being scanned but also based on the contents of the entire traffic flow. The specific operation of payload analyzer **110** will be described with reference to FIG. **3**.

Once the contents of the packets have been scanned and a conclusion reached by traffic flow scanning engine **140**, the packets and the associated conclusions of either or both the header processor and the payload analyzer are sent to quality of service (QoS) processor **116**. QoS processor **116** again stores the packets in its own packet storage memory **118** for forwarding. QoS processor **116** is operable to perform the traffic flow management for the stream of data packets processed by network apparatus **100**. QoS processor contains engines for traffic management **126**, traffic shaping **128** and packet modification **130**.

QoS processor **116** takes the conclusion of either or both of header processor **104** and payload analyzer **110** and assigns the data packet to one of its internal quality of service queues **132** based on the conclusion. The quality of service queues **132** can be assigned priority relative to one another or can be assigned a maximum or minimum percentage of the traffic flow through the device. This allows QoS processor to assign the necessary bandwidth to traffic flows such as VoIP, video and other flows with high quality and reliability requirements while assigning remaining bandwidth to traffic flows with low quality requirements such as email and general web surfing to low priority queues. Information in queues that do not have the available bandwidth to transmit all the data currently residing in the queue according to the QoS engine is selectively discarded thereby removing that data from the traffic flow.

The quality of service queues **132** also allow network apparatus **100** to manage network attacks such as denial of service (DoS) attacks. Network apparatus **100** can act to qualify traffic flows by scanning the contents of the packets and verifying that the contents contain valid network traffic between known sources and destinations. Traffic flows that have not been verified because they are from unknown sources or because they are new unclassified flows can be assigned to a low quality of service queue until the sources are verified or the traffic flow classified as valid traffic. Since most DoS attacks send either new session information, data from spoofed sources, or meaningless data, network apparatus **100** would assign those traffic flows to low quality traffic queues. This ensures that the DoS traffic would receive no more that a small percentage (i.e. 5%) of the available bandwidth thereby preventing the attacker from flooding downstream network equipment.

The QoS queues **132** in QoS processor **116** (there are 65 k queues in the present embodiment of the QoS processor although any number of queues could be used) feed into schedulers **134** (1024 in the present embodiment), which feed into logic ports **136** (256 in the present embodiment), which send the data to flow control port managers **138** (32 is the present embodiment) which can correspond to physical egress ports for the network device. The traffic management engine **126** and the traffic shaping engine **128** determine the operation of the schedulers and logic ports in order to maintain traffic flow in accordance with the programmed parameters.

QoS processor **116** also includes packet modification engine **130**, which is operable to modify, add, or delete bits in any of the fields of a data packet. This allows QoS processor **116** to change addresses for routing or to place the appropriate headers on the data packets for the required protocol. The packet modification engine **130** can also be used to change information within the payload itself if necessary. Data packets are then sent along fast-data path **126** to output PHY interface **120** where it is converted back into an analog or optical signal and placed on the network.

As with all network equipment, a certain amount of network traffic will not be able to be processed along fast-data path **126**. This traffic will need to be processed by on board microprocessor **124**. The fast-path traffic flow scanning engine **140** and QoS processor **116** send packets requiring additional processing to flow management processor **122**, which forwards them to microprocessor **124** for processing. The microprocessor **124** then communicates back to traffic flow scanning engine **140** and QoS processor **116** through flow management processor **122**. Flow management processor **122** is also operable to collect data and statistics on the nature of the traffic flow through network apparatus **100**. In addition to processing odd, or missing packets, microprocessor **124** also controls the user management interface **142** and recompiles databases **108** and **114** to accommodate new signatures and can be used to learn and unlearn sessions identified by the traffic flow scanning engine **140**.

The abilities of network apparatus **100** are unique in a number of respects. Network apparatus **100** has the ability to scan the contents of any data packet or packets for any information that can be represented as a signature or series of signatures. The signatures can be of any arbitrary length, can begin and end anywhere within the packets and can cross packet boundaries. Further, network apparatus **100** is able to maintain state awareness throughout all of the individual traffic flow by storing state information for each traffic flow representing any or all signatures matched during the course of that traffic flow. Existing network devices operate by looking for fixed length information at a precise point within each data packet and cannot look across packet boundaries. By only being able to look at fixed length information at precise points in a packet, existing network equipment is limited to acting on information contained at an identifiable location within some level of the packet headers and cannot look into the payload of a data packet much less make decisions on state information for the entire traffic flow or even on the contents of the data packet including the payload.

Referring now to FIG. **3**, the payload analyzer **110** of FIG. **2** is described in greater detail. As described above payload analyzer **110** is operable to scan the contents of data packets

forwarded from header processor **104** from FIG. **2**. Payload analyzer **110** includes three separate engines, queue engine **302**, context engine **304**, and payload scanning engine **306**.

Since payload analyzer **110** scans the contents of the payload, and is able to scan across packet boundaries, payload analyzer **110** must be able reassemble fragmented packets and reorder out of order packets on a per session basis. Reordering and reassembling is the function of queue engine **302**. Queue engine **302** receives data off the fast-path data bus **126** using fast-path interface **310**. Packets are then sent to packet reorder and reassembly engine **312**, which uses packet memory controller **316** to store the packets into packet memory **112**. Reordering and reassembly engine **312** also uses link list controller **314** and link list memory **318** to develop detailed link lists that are used to order the data packets for processing. Session CAM **320** can store the session id generated by queue engine **302** of payload analyzer **110**. Reordering and reassembly engine **312** uses the session id to link data packets belonging to the same data flow.

In order to obtain the high throughput speeds required, payload analyzer **110** must be able to process packets from multiple sessions simultaneously. Payload analyzer **110** processes blocks of data from multiple data packets each belonging to a unique traffic flow having an associated session id. In the preferred embodiment of the present invention, payload analyzer **110** processes 64 byte blocks of 64 different data packets from unique traffic flows simultaneously. Each of the 64 byte blocks of the 64 different data flows represents a single context for the payload analyzer. The scheduling and management of all the simultaneous contexts for payload analyzer **110** is handled by context engine **304**.

Context engine **304** works with queue engine **302** to select a new context when a context has finished processing and been transmitted out of payload analyzer **110**. Next free context/next free block engine **330** communicates with link list controller **314** to identify the next block of a data packet to process. Since payload analyzer **110** must scan data packets in order, only one data packet or traffic flow with a particular session id can be active at one time. Active control list **332** keeps a list of session ids with active contexts and checks new contexts against the active list to insure that the new context is from an inactive session id. When a new context has been identified packet loader **340** uses the link list information retrieved by the next free context/next free block engine to retrieve the required block of data from packet memory **112** using packet memory controller **316**. The new data block is then loaded into a free buffer from context buffers **342** where it waits to be retrieved by payload scanning engine interface **344**.

Payload scanning engine interface **344** is the interface between context engine **304** and payload scanning engine **306**. When payload scanning engine **306** has room for a new context to be scanned, payload scanning engine interface **344** sends a new context to string preprocessor **360** in payload scanning engine **306**. String preprocessor **360** is operable to simplify the context by performing operations such as compressing white space (i.e. spaces, tabs, returns) into a single space to simplify scanning. Once string preprocessor **360** has finished, the context is loaded into one of the buffers in context buffers **362** until it is retrieved by scheduler **364**. Scheduler controls the input and output to signature memory **366**. While four signature memories **366**, each of which is potentially capable of handling multiple contexts, are shown any number could be used to increase or decrease the throughput through payload scanning engine **110**. In the present embodiment, each of the signature memories **366** is capable of processing four contexts at one time.

One of the signature memories **366** is assigned the context by scheduler **364** and then compares the significant bits of the context to the database of known strings that reside in signature memory **366**. The signature memory **366** determines whether there is a potential match between the context and one of the known signatures using significant bits, which are those bits that are unique to a particular signature. If there is a potential match, the context and the potentially matched string are sent to leaf string compare **368** which uses leaf string memory **370** to perform a bit to bit comparison of the context and the potentially matched string.

The conclusion of the payload scanning are then sent back to the payload scanning interface **344** along with possibly a request for new data to be scanned. The conclusion of the payload scanning can be any of a number of possible conclusions. The scanning may not have reached a conclusion yet and may need additional data from a new data packet to continue scanning in which case the state of the traffic flow and any incomplete scans are stored in session memory **354** along with other appropriate information such as sequence numbers, counters etc. The conclusion reached by signature memory **366** may also be that scanning is complete and there is or isn't a match, in which case the data packet and the conclusion are sent to transmit engine **352** for passing to QoS processor **116** from FIG. **2**. The scanning could also determine that the data packet needs to be forwarded to microprocessor **124** from FIG. **2** for further processing, so that the data packet is sent to host interface **350** and placed on host interface bus **372**. In addition to handling odd packets, host interface bus **350** allows microprocessor **124** to control any aspect of the operation of payload analyzer **110** by letting microprocessor **124** write to any buffer or register in context engine **304**.

State information is stored in session memory **354** and is updated as necessary after data associated with the particular traffic flow is scanned. The state information for each traffic flow represents the content awareness of network apparatus **100** from FIG. **2**, and allows network apparatus to act not only on the information scanned, but also on all the information that has been scanned for each traffic flow.

The operation of transmit engine **352**, host interface **350**, session memory controller **348**, which controls the use of session memory **354**, and of general-purpose arithmetic logic unit (GP ALU) **346**, which is used to increment or decrement counter, move pointers, etc., is controlled by script engine **334**. Script engine **334** operates to execute programmable scripts stored in script memory **336** using registers **338** as necessary. Script engine **334** uses control bus **374** to send instruction to any of elements in context engine **304**.

As can be seen from the description of FIG. **3**, payload analyzer **110** allows the entire contents of any or all data packets received by a network device to be scanned against a database of known signatures. The scanned contents can be any variable or arbitrary length and can even cross packet boundaries. The abilities of payload analyzer **110** allow the construction of a network device that is content aware which gives the network device the ability to operate on data packets based on the content of that data packet as has already been described herein.

Referring now to FIG. **4** an embodiment of the network apparatus of the present invention with routing capabilities is described. Routing network apparatus **400** is formed by two or more route engine cards **402** connected to switch

fabric **404**. One or more management cards **406** are also included to provide a user interface and to manage route engine cards **402**. Each of route engine cards **402** operate fundamentally as described with respect to network apparatus **100** of FIG. **2**. Traffic flow scanning engine **408**, formed by header processor **410** and payload analyzer **412**, scans the contents of the data packets and generates a conclusion based on the contents. The packets and associated conclusions are forwarded to ingress QoS processor **414**, which assigns the packets to a QoS queue. The data packets are then sent to the switch fabric, which forwards the data packets to the proper route engine card **402** for it's assigned output port. The data packet then flows through the egress QoS processor **418**, which schedules the traffic received from all the route engine cards **402** for transmission onto the network. The microprocessor **124** shown in FIG. **2** could be present on the route engine card **402** or could potentially be moved to the management card **406** to allow one microprocessor to support multiple route engine cards **402**. Each of the route engine cards **402** could even have its own microprocessor with an additional microprocessor on management card **406**.

Having multiple route engine cards with multiple ingress and egress paths allows routing network apparatus to function as a routing network device, as opposed to the single ingress and egress path of the "bump-in-the-line" device described with respect to FIG. **2**. This allows the routing functions of header processor **410** to be utilized in routing network apparatus **400**.

Referring now to FIG. **5**, a method of preventing denial of service attacks according to the present invention is shown. The method begins at start block **500** and proceeds to block **502**, which scans the header information of the data packets. The method then passes to block **504** where the data packets are reassembled and reordered to create an ordered flow of complete data packets. During reorder and reassembly, block **506** determines whether the data packets reorder and reassemble correctly. If they do not reorder or reassemble correctly, such as with a teardrop type attack, the packet or packets are dropped as shown with block **508**, thereby preventing the attack from reaching its destination. The dropping of data packets can be accomplished by flagging the data packet to be dropped immediately or at some point in the future, for example by the QoS processor **116** from FIG. **2**.

If the blocks do reorder and reassemble correctly the method passes to block **510**, which scans the payload contents of the data packets. During the scanning of the payload contents, the method determines whether the data conforms to enforced protocols such as length, structure, proper context within the data, etc. If the data does not conform to enforced protocols, such as exceeding maximum packet length with a Ping of Death type attack, the packet is also dropped as shown by block **508**.

Data packets which reorder and reassemble correctly and which contain data that conforms to enforced protocols are then checked to see if they are part of a validated traffic flow. As described above with reference to FIGS. **2** and **3**, each individual traffic flow is identified and assigned a session id. After scanning a particular traffic flow over enough data packets to determine the nature of the traffic flow the traffic flow is classified, or in other words assigned a quality of service level and either validated as an appropriate traffic flow or left non-validated. The classification of the traffic flow is dynamic and can change over the course of the traffic flow as more information about the traffic flow is learned from scanning. The classification is part of the state of the traffic flow stored in session memory **354** from FIG. **3**.

Block **514** shows the determination of whether the data packet belongs to a validated traffic flow. If the packet does belong to a validated traffic flow, it is assigned to a higher priority QoS queue based on the nature of the traffic flow, shown in block **520**. The data packet is then transmitted onto the network as defined by the QoS protocol for the QoS queue to which it was assigned, as shown by block **522**. Block **524** then represents the end of the present method.

If the packet does not belong to a validated traffic flow, such as with a Smurf or SYN flood where valid sessions are never established, it is assigned to a low priority QoS queue, as shown in block **516**. The traffic management and traffic shaping engines **126** and **126** of QoS processor **116** from FIG. **2** can be programmed to insure that the low priority QoS queues are only allowed a predetermined percentage of the available bandwidth. This insures that the non-validated data packets cannot consume more than a small portion of the overall traffic flowing through network apparatus **100** as shown in block **518**. By limiting the amount of bandwidth available to brute force attacks, such as the SYN flood attack or Smurf attacks, the attack is never allowed to consume enough network bandwidth to overwhelm the network.

FIG. **5** shows how the present invention can use its awareness of the contents of data packets and associated traffic flows, including keeping state over each traffic flow, to prevent DoS type attacks. Network apparatus **100** from FIG. **2** is able to either drop nonconforming data packets or to prevent flood type attacks from consuming all available bandwidth by understanding the nature of the data passing through it.

While the header processor, the QoS processors, and the flow management processor described with reference to FIGS. **2** and **4** can be any suitable processor capable of executing the described functions, in the preferred embodiment the header processor is the Fast Pattern Processor (FPP), the QoS processor is the Routing Switch Processor (RSP), and the flow management processor is the ASI processor, all manufactured by the Agere Division of Lucent Technologies, Austin Tex. Similarly the switch fabric may be any suitable switch fabric as is well known in the industry, including those manufactured by Power X Networks, Inc., 2833 Junction Ave., Suite 110, San Jose, Calif. The microprocessor described with reference to FIGS. **2** and **4** could be any suitable microprocessor including the PowerPC line of microprocessors from Motorola, Inc., or the ×86 or Pentium line of microprocessors available from Intel Corporation. Although particular references have been made to specific protocols, implementations and materials, those skilled in the art should understand that the network apparatus, both the "bump-in-the-line" and the routing apparatus can function independent of protocol, and in a variety of different implementations without departing from the scope of the invention.

Although the present invention has been described in detail, those skilled in the art should understand that they can make various changes, substitutions and alterations herein without departing from the spirit and scope of the invention in its broadest form.

We claim:

1. A method for preventing denial of service attacks over a data network including a plurality of traffic flows each formed by a plurality of data packets, the method comprising:

scanning the contents of the data packets;

verifying that the data packets conform to a set of predetermined requirements;

checking if the data packet is associated with a validated traffic flow; and

placing the data packet in a higher priority quality of service if the data packet is associated with a validated

traffic flow and to a low priority quality of service if it is not associated with a validated traffic flow.

2. The method of claim **1** wherein verifying includes insuring that the data packets reorder and reassemble according to a defined policy and insuring that the data packets conform to required parameters.

3. The method of claim **1** further comprising between verifying and checking:

dropping the data packet if it does not conform to the set of predetermined requirements.

4. The method of claim **3** wherein scanning includes scanning of the data packet's header information and scanning the data packet's payload contents.

5. The method of claim **1** wherein the predetermined requirements include packet length, non-overlapping offset fields, and adherence to protocol standards.

6. The method of claim **5** wherein the validated traffic flows are identified by a state associated with each traffic flow.

7. A method of preventing denial of service attacks on a data network which includes a plurality of traffic flows each formed by multiple data packets having header and payload information, the method using a network device comprising a traffic flow scanning engine and a quality of service processor having a low priority queue and higher priority queues, the method comprising:

scanning the header information using the traffic flow scanning engine;

reordering and reassembling the data packets using the traffic flow scanning engine;

flagging data packets that do not reorder or reassemble correctly to be dropped;

scanning the payload contents using the traffic flow scanning engine;

determining whether the data packets conform to a set of predetermined requirements;

flagging data packets that do not conform to be dropped;

checking if the data packets are associated with a validated traffic flow; and

assigning data packets to a higher priority quality of service if the data packet is associated with a validated traffic flow and to a low priority quality of service if the data packet is not associated with a validated traffic flow.

8. The network device of claim **7** wherein the set of predetermined requirements include packet length, non-overlapping offset fields, and adherence to protocol standards.

9. The method of claim **7** wherein flagged data packets are dropped by the traffic flow scanning engine.

10. The method of claim **7** wherein flagged data packets are dropped by the quality of service processor.

11. The method of claim **7** wherein the validated traffic flows are identified by a state associated with each traffic flow.

12. A network device for preventing denial of service attacks on a data network which includes a plurality of traffic flows each formed by multiple data packets having contents including header information and payload information, the network device comprising:

a traffic flow scanning engine operable to scan the header and payload information of the data packets, to associate each data packet with a particular traffic flow and to determine whether each traffic flow is a validated traffic flow or a non-validated traffic flow, wherein the traffic flow scanning engine is further operable to reorder and reassemble the data packets and to verify that the data packet conforms to predetermined requirements such that the traffic flow scanning engine produces a conclusion associated with each data packet; and

a quality of service processor connected to the traffic flow scanning engine and operable to place the data packets into a quality of service queue from a plurality of quality of service queues based on the conclusion from the traffic flow scanning engine, wherein data packets from non-validated traffic flows are assigned to a low priority queue and data packets from validated traffic flow are assigned to a higher priority queue based on its contents.

13. The network device of claim **12** wherein the low priority queue is assigned a maximum percentage of network bandwidth.

14. The network device of claim **12** wherein data packets that do not reorder or reassemble correctly and data packets that do not conform to the predetermined requirements are dropped by the network device.

15. The network apparatus of claim **12** wherein the traffic flows are identified by a state associated with each traffic flow, the state representing whether the traffic flow is validated or non-validated.

16. The network apparatus of claim **12** wherein the set of predetermined requirements include packet length, non-overlapping offset fields, and adherence to protocol standards.

* * * * *