(12) INTERNATIONAL APPLICATION PUBLISHED UNDER THE PATENT COOPERATION TREATY (PCT)

(19) World Intellectual Property Organization
International Bureau

(43) International Publication Date
22 August 2002 (22.08.2002)

PCT

(10) International Publication Number
WO 02/065359 A1

(51) International Patent Classification[7]: G06F 17/60

(21) International Application Number: PCT/GB01/00523

(22) International Filing Date: 9 February 2001 (09.02.2001)

(25) Filing Language: English

(26) Publication Language: English

(71) Applicant *(for all designated States except US)*: **ON BOARD INFO LIMITED** [GB/GB]; 21-27 Seagrave Road, London SW6 1RP (GB).

(72) Inventors; and
(75) Inventors/Applicants *(for US only)*: **HEPWORTH, Isaac, Joel** [GB/GB]; 11 Stoney Street, London SE1 9AD (GB). **RUSTON, Jeremy, Waine** [GB/GB]; The Engine, 50 Back Street, Ashwell, Hertfordshire SG7 5PE (GB). **DODSON, Robert** [GB/GB]; 6 Sussex Court, 50 Roan Street, Greenwhich, London SE10 9JT (GB). **MARJARA, Gursuran, Singh** [GB/GB]; 17 Hilmanton, Lower Earley, Reading RG6 4HN (GB). **EITER-PORTER, Ray, John** [GB/GB]; Flat 1, 59 Drayton Gardens, London SW10 9RU (GB).

(74) Agents: **CROSS, James, P., A.** et al.; R G C Jenkins & Co, 26 Caxton Street, London SW1H 0RJ (GB).

(81) Designated States *(national)*: AE, AG, AL, AM, AT, AU, AZ, BA, BB, BG, BR, BY, BZ, CA, CH, CN, CR, CU, CZ, DE, DK, DM, DZ, EE, ES, FI, GB, GD, GE, GH, GM, HR, HU, ID, IL, IN, IS, JP, KE, KG, KP, KR, KZ, LC, LK, LR, LS, LT, LU, LV, MA, MD, MG, MK, MN, MW, MX, MZ, NO, NZ, PL, PT, RO, RU, SD, SE, SG, SI, SK, SL, TJ, TM, TR, TT, TZ, UA, UG, US, UZ, VN, YU, ZA, ZW.

(84) Designated States *(regional)*: ARIPO patent (GH, GM, KE, LS, MW, MZ, SD, SL, SZ, TZ, UG, ZW), Eurasian

[Continued on next page]

(54) Title: ELECTRONIC INFORMATION MANAGEMENT SYSTEM

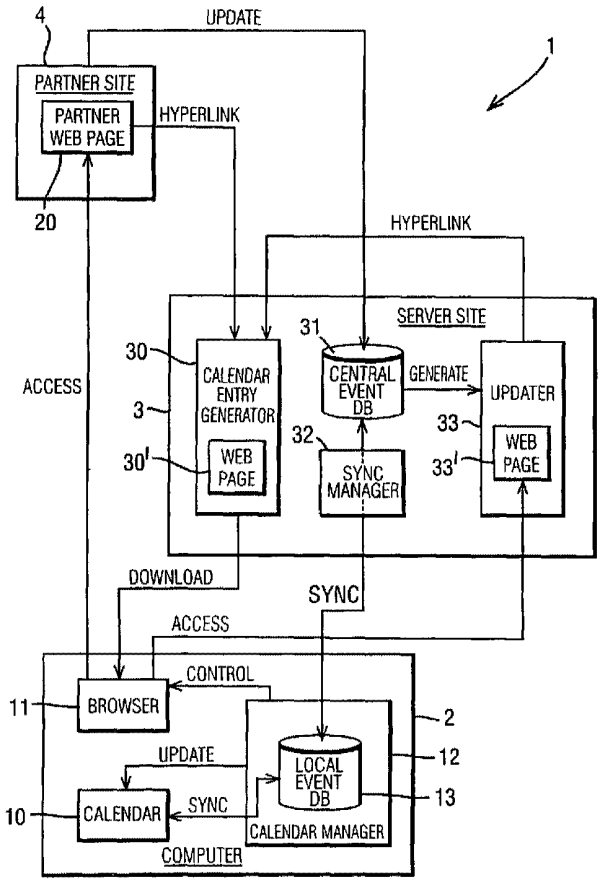

(57) Abstract: There is provided a system for making automatic entries into an electronic information manger operated on a computer, such as an electronic calendar. The system comprises a server site which provides functionality for allowing a user to enter events in the electronic calendar. An event for entry into the electronic calendar is displayed on a web page operated by a third party using HTML, thereby to provide a hyperlink between the event and the server site. The hyperlink is defined by the server site's URL. In addition, the URL address comprises an extension containing information indicative of the event. An event is selected by using a browser operated on the computer. Upon selection of event, the browser connects to the server site (using the server site's URL). In response thereto, the server site generates an XML-based response using the URL extension. The browser downloads the XML response. The XML response triggers the browser to launch software on the computer which enters the event into the electronic calendar. In a similar way, events previously entered into the electronic calendar can be updated. The system can also be used to manage entries into other information managers such as electronic address books, etc.

WO 02/065359 A1

patent (AM, AZ, BY, KG, KZ, MD, RU, TJ, TM), European patent (AT, BE, CH, CY, DE, DK, ES, FI, FR, GB, GR, IE, IT, LU, MC, NL, PT, SE, TR), OAPI patent (BF, BJ, CF, CG, CI, CM, GA, GN, GW, ML, MR, NE, SN, TD, TG).

Published:
— *with international search report*
— *with amended claims and statement*

For two-letter codes and other abbreviations, refer to the "Guidance Notes on Codes and Abbreviations" appearing at the beginning of each regular issue of the PCT Gazette.

ELECTRONIC INFORMATION MANAGEMENT SYSTEM

The present invention relates to a system for providing information items to a computer for operating an electronic information manager and to an electronic information management system.

Background of the Invention

Electronic calendar software such as Microsoft's Outlook is known which allows a user to maintain an electronic calendar on his computer. Generally, events can be added to the calendar by inputting into the computer information indicative thereof. However, often a user "surfs" the internet and finds an event he may wish to add to his calendar, in which case the user needs to select or activate on his computer the calendar software in order to enter the event, normally by typing in the event's details. Subsequently, the user may continue "surfing" the internet. The same may apply for electronic address books, where the user discovers an address on a web page he wishes to add to his address book. This process of making an entry is clearly inconvenient. The present invention aims to address this problem.

Summary of the Invention

According to one aspect of the present invention, there is provided a system for providing information items to a computer for operating an electronic information manager, the system comprising: data processing means for receiving a first request indicative of an information item selected

for entry into the electronic information manager, and for generating an second request on the basis of the first request for processing by the computer to enter the information item into the electronic information manager; and transmitter means for transmitting the second request to the computer.

According to another aspect of the present invention, there is provided an electronic information management system comprising: first processing means for operating an electronic information manager, and for accessing second processing means providing for user selection of one or more information items, wherein the first processing means are arranged to generate and transmit a request message in response to user selection of an information item, and to effect entry of the selected information item into the electronic information manager in response to receipt of information item message indicative of the information item; and third processing means for receiving said request message from the first processing means, and for generating and transmitting said information item message to the first processing means.

According to another aspect of the present invention, there is provided An electronic information management system comprising: first processing means for operating an electronic information manager, and being associated with a first storage means for storing thereon and retrieving therefrom information items for entry into the electronic information manager; and second processing means for operating a second storage means, and for

receiving from an external source information items for storage in said second storage means, and for transmitting to said first processing means information items received from said external source for storage in said first storage means.

Brief Description of the Drawings

Embodiments of the invention will now be described, by way of example only, with reference to the accompanying drawings, in which:

Figure 1 illustrates schematically the configuration of an electronic calendar management system according to an embodiment of the present invention;

Figure 2 illustrates an exemplary screen shot of a partner web page;

Figure 3 illustrates an exemplary screen shot of an update web page; and

Figures 4 to 9 illustrate the steps involved in various scenarios of operation of the electronic calendar management system of Figure 1.

Detailed Description of the Drawings

I. SYSTEM OVERVIEW

System Components

Figure 1 illustrates schematically the configuration of an electronic calendar management system 1 according to an embodiment of the present invention. The system comprises a computer 2, a server site 3, and a partner site 4, all of which are interlinked by the Internet. The computer 2 may be

any type of computing device that allows a user to interactively browse web sites via a web browser. For example, the computer 2 may be a personal computer (PC), a Palm computing device, or a WAP mobile phone. Also, the computer does not need to be self-contained but may interact with external elements (such as external data storage devices) and/or other computers in a network. The computer 2 operates electronic calendar software 10 such as Microsoft's Outlook, as well as browser software (browser 11) such as Microsoft's Internet Explorer, or Netscape's Navigator. The computer 2 further operates calendar management software 12 which will be referred to as calendar manager 12 herein. The calendar manager 12 in turn manages a local event database 13.

The server site 3 provides functionality for allowing a user to download and manage events. The server site 3 comprises a calendar entry generation module (referred to as calendar entry generator 30), a central event database 31, a synchronisation management module ("synchronisation manager 32"), and an event update module 33 ("event updater 33"). The calendar entry generator 30 and the event updater 33 are associated with different URL addresses to provide access via the browser 11. Also, a web page is associated with each of the calendar entry generator 30 and the event updater 33 to allow interactive user access to a number of functions provided by these modules, as will be explained below.

The partner site 4 is operated by an entity (referred to as "partner" herein) wishing to display events. The partner site 4 usually would host one or more web pages displaying a number of events (schematically indicated as partner web page 20 in Figure 1). For example, the partner can be a concert agency operating the partner web page 20 in order to display scheduled concert events. In this example, partner web page 20 would include a schedule indicating details of each of a number of concerts such as date, time, venue, etc.

Generally, the electronic calendar management system 1 allows a user to access the partner site 4 (using the browser 11), and to select a displayed event from the partner web page 20. By making such selection, the user automatically causes the system 1 to effect an entry representing the selected event to be made into the user calendar 10.

Generation of Calendar Entries

Figure 2 illustrates an exemplary schematic screen shot of the partner web page 20. The web page contains online-booking details for a flight from London to Frankfurt, including the departure and arrival times of both the outbound and the return flights. Embedded in the flight schedule are symbols 21 (one for the outbound flight and one for the return flight). Clicking on one of the symbols 21 causes a corresponding entry to be made into the calendar 10, as explained in more detail in the following.

The scheduled events displayed by the partner site 4 are embedded into the HTTP-based partner web page 20 using HTML, thereby to provide a hyperlink between the events and the calendar entry generator 30, as indicated in Figure 1. Each hyperlink is defined by the calendar entry generator's URL address. In addition, the URL address comprises an extension containing information indicative of the selected event, including a unique identifier of the partner site 20 ("pid"), and a unique identifier of the event ("eid"). No other constraints apply so that a display of events in the partner web page 20 for user selection for entry into the user calendar 10 can be easily implemented.

For example, if the selected event is a Beethoven concert, scheduled to take place in the Royal Albert Hall on 8 April 2001, 8pm, the URL's extension would reflect such details. An exemplary URL would be:

http://ceg.server.com/pid=1234/eid=5678/08/04/2001/20.00/beethoven@royal_albert_hall

Upon selection of the Beethoven concert from the partner site, the browser 11 connects to the calendar entry generator 30, using the address portion of the above URL (ceg.server.com). In response thereto, the calendar entry generator 30 generates an XML-based HTTP response using the

information contained in the URL extension (pid=1234/eid=5678/08/04/2001/20.00/beethoven@royal_albert_hall). The browser 11 downloads the XML response from the calendar entry generator 30. The XML response triggers the browser 11 to launch the calendar manager 12 using file association (MIME-type). The calendar manager 12 effects storage of data representative of the selected event into the local event database 13, and also makes a suitable entry into the user's calendar 10.

Event Deletion

Of course, the user may also manipulate the events entered into his calendar 10 directly. For example, the user may decide to include an event from the partner web page 20 into his calendar, and then subsequently to delete the event. The calendar manager 12 periodically checks the contents of the calendar 10 with a view to detect alterations to events entered from the partner web page 20. Alterations are detected by comparing the contents of the local event database 13 with the contents of the calendar 10. If alterations are detected, the local event 13 database is updated accordingly.

The calendar manager 12 communicates information indicative of newly stored or modified events to the synchronisation manager 32 in the server 3. Communications to the synchronisation manager 32 are implemented by transmitting HTTP based event messages. Upon receipt of such event message, the synchronisation manager 32 stores data

representative of the event in the central event database 31. The content of the central event database 31 is thereby updated to accord with the content of the local event 13.

Event Updates

The event update module 33 operates a web page 33' (update web page 33') that contains updates to events the user has previously entered into his calendar 10 by an appropriate selection from the partner web page 20. Figure 3 illustrates an exemplary screen shot of the update web page 33'. The web page 33' contains several windows: un update window 34, an event window 35, an "idea" window 36, a "top ten" window 37, and a miscellaneous window 38. In addition, the update web page 33' contains advertisements 39.

The update window 34 includes information regarding changes to an event previously entered into the user calendar 10. In the illustrated example, the update window 34 indicates a change of venue of the Motor Show. By clicking on a HTML symbol 34', the user may confirm the update, that is to effect an update to be made in the calendar 10 as will be explained in more detail below. Also, the user may determine whether or not confirmation of future updates is required by making an appropriate selection in a pulldown menu 34''.

The event window 35 displays a list of events that have been entered into the user calendar 10 through the electronic calendar management system 1. The idea window 36 displays a list of suggestions. Each suggestion may include hyperlinks to other web sites (such as www.windresistantumbrellas.com) provided by third parties. Third parties may be required to pay for having suggestions and/or hyperlinks displayed in the idea window 36, thus providing a source of income to the provider of the electronic calendar management system 1.

The top ten window 37 displays a list of events considered recommendable by the provider of the system 1. Each of the displayed events can be selected for entry into the user calendar 10 in the same way events from the partner web page 20 are entered into the calendar 10. The miscellaneous window 38 is provided in order to display miscellaneous information related to the system 1. The advertisements 39 are provided by third parties who may have to pay for this service, thus providing another source of income for the provider of the system 1.

The update web page 33' is accessible through the browser 11. For example, if the above Beethoven concert is rescheduled to take place on a different date or at a different venue, an appropriate updated event message is displayed on the update web page 33'. The updated event message is embedded into the update web page 33' using HTML so as to provide a hyperlink to the calendar

entry generator 30. Accordingly, the user can update his calendar 10 by selecting the updated event from the update web page 33', thereby to make an entry into the user calendar 10 in the same way events selected from the partner web page 20 are entered. In addition, the previous out-of-date event is deleted from the user calendar (i.e. the Beethoven concert before reschedule). The local event 13 and the central event database 31 are updated accordingly as described above. Also, the updated event message is deleted from the update web page 33'.

The update functionality is made possible by the partner transmitting updated event messages from the partner site 4 to the server site 3, for example by sending an e-mail message containing information indicative of the updated event. Data representative of the updated event is then stored in the central event database 31, and an appropriate HTML update event message is embedded into the update web page 33'.

II. SYSTEM COMPONENTS

User Calendar 10

The user calendar 10 is the software which the user uses to manage his appointments. Examples are Microsoft Outlook and calendar software installed on Palm computing devices or WAP mobile phones.

The calendar manager 12 supports the management of more than one electronic calendar for any given user. This is referred to as multi-calendar support. Likewise, the calendar manager 12 is capable of interacting with various calendar types, such as Outlook, Palm, Lotus, calendar.msn.com, etc., each of which is considered a platform. The ability to interact with various calendar types is referred to as multi-platform support and will be described further below.

Calendar Manager 12

The calendar manager 12 is the software which the user downloads and runs on the computer 2 in order to provide the calendar management functionality. The calendar manager 12 is implemented in C++ to enable maximum flexibility in conjunction with minimum size of compiled code, in order to facilitate the downloading onto the computer 2. The calendar manager 12 is responsible for:

managing new entries into the user calendar 10;

keeping the user calendar 10 up to date;

managing user changes to events in the calendar 10;

managing the local event database 13;

notifying the synchronisation manager 32 of changes in the local event database 13, thereby keeping the central event database 31 up to date with entries currently in the user calendar 10;

managing the interaction with the user.

These functions may be implemented using COM in order to maintain abstraction and independence of the individual functional components and also to enable addition of support for new calendar types (thereby providing the above mentioned multi-platform support) and also changes in implementation of the local event database 13.

Local Event Database 13

The local event database 13 is formed by a persistent store on the computer 2 in which data records representative of selected events are stored. The database 13 is implemented as an XML-based store, i.e. as an XML file or collection of files. The database 13 is wrapped by a COM interface so that the actual implementation of the database 13 can vary independently without effecting the interface to the calendar manager 12. Alternative implementations would include MSDE and Microsoft Access using ADO.

Browser 11

The browser 11 is the software the user uses to "surf" the web. On PCs, this will typically be either Netscape's Navigator or Microsoft's Internet Explorer, although other browsers may be used and a variety of new browsers can be expected in future for internet-enabled handheld devices. The browser 11 is responsible for:

rendering web pages to be viewed by the user;

downloading web pages and other data from the web using HTTP.

Browsers as such are known and are therefore not explained further.

Partner Site 4

The partner site 4 hosts the web page(s) of an entity ("partner") wishing to display events for selection and automatic entry into the user calendar 10. The partner site 4 is implemented on a server which, depending on the size of the partner and its hardware resources, may be shared with other companies; for larger partners several physical servers may host the partner site 4. The technologies employed on the partner server may vary from low-volume static sites running on a standard web server (e.g. personal homepages) to large dynamic sites running on a custom-built web server (e.g. amazon.com).

Server Site 3

The server site 3 hosts the functional parts of the calendar management system 1 which process updated events, stores user and partner data and presents the user with targeted advertising. This encompasses both hardware and software components. In particular, the server site 3 hosts the calendar entry generator 30, the central event database 31, the synchronisation manager 32, and the event updater 33. The server site 3 is hosted by one or more servers, though for simplicity, the server site 3 is herein assumed to form a single entity.

Calendar Entry Generator 30

The calendar entry generator 30 is responsible for converting incoming HTTP requests from the partner server 4 into XML-based HTTP responses for downloading by the browser 11. In technical terms, the calendar entry generator 30 is a HTTP daemon whose XML responses are based on data encoded in incoming HTTP requests from the partner site 4.

Also, the calendar entry generator 30 is responsible for detecting whether or not a selection of a hyperlinked event from the partner web page 20 is made from a computer operating the calendar manager 12. This is implemented using cookie technologies which, as such, is known and therefore not described in more detail. Accordingly, in response to an incoming HTTP request, the calendar entry generator 30 executes cookie processing software to detect the presence or absence of a cookie in the incoming HTTP request. In the absence of a cookie, the calendar entry generator 30 redirects the browser 11 to a registration web page. Here, the user can register with the electronic calendar management system 1 and download the calendar manager 12 onto his computer, or alternatively log in and restore the cookie if the user has installed the calendar manager 12 on a computer different from the one he is using. In the presence of a cookie (or upon restoration of the cookie, as the case may be), the calendar generator 30 proceeds by transmitting an XML response to the browser 11.

The registration page also provides the option for the user to register with the service provider without downloading the calendar manager 12, in which case records representing selected events will be stored in the central event database 31 only. The user will subsequently be able to view and copy the selected events into the calendar 10 via the update web page 33'.

Central Event Database 31

The central event database 31 is a relational database which provides a persistent store for records representative of any selected event and user-related data. The database 31 stores an event profile of each user – sufficient to recreate all the events in the calendar 10 of any given user in the case the user reorganises his machine and/or loses all event data. The event profile allows the monitoring of event selection by any given user in order to generate user profiles, the use of which will be described in more detail below.

The central event database 31 also keeps a record of different existing versions of events selected by all users, and of which user has which versions. This is necessary to cover the scenario of one user updating an event in his calendar 10, while another user has not (yet) done so.

Event Updater 33

The event updater 33 operates the update web page 33' which the user can visit to download updates to previously selected events and follow-up messages (e.g. events related to previously selected events). The event updater 33 can provide additional functions to enable the user to manage events, create new events, e-mail events to other users, etc.

When the user browses to the update web page 33', the event updater 33 identifies the user from the cookie embedded in the HTTP request or, in the absence of a cookie, by asking the user to log in. Based on the user identity, the event updater 33 then queries the central event database 31 to identify events associated with the user which require updating. The user is then presented with a list of updates on the update web page 33' from which he may select.

The event updater 33 also displays on the web page 33' recommended events as well as targeted and untargeted invitations to select events. Invitations are unsolicited recommendations from third parties who wish to distribute their event-based data via the event update module 33. Furthermore, the event update module 33 may display targeted banner advertisement on the site 33', using information about a user's profile from the central event database 31. The user profile is generated on the basis of a record of the user's previous behaviour, i.e. statistics on the selection of

events, etc.. In addition, the user may be prompted to input details pertaining to such profile (e.g. user preferences, areas of interest, hobbies, etc.).

Synchronisation Manager 32

The synchronisation manager 32 is responsible for synchronising the central event database 31 with the local event database 13 by updating the central event database 31 when a new entry or change is made in the local event database 13. Communications between the computer 2 and the synchronisation manager 32 are implemented using HTTPS. The content of messages from the computer 2 to the synchronisation manager 32 is XML-based.

III. INTERFACES BETWEEN SYSTEM COMPONENTS

Partner Site 4 – Calendar Entry Generator 30

The calendar entry generator 30 expects to receive URL requests of a particular form. The URL specification can consist of two primary formats: a path based format and a CGI based format. An example of a path-based format was given above. The same event embedded in the CGI-based format would be:

http://ceg.server.com/?pid=1234&eid=5678&day=08&month=04&year=2001&starttime=20.00&subject=beethoven@royal_albert_hall

The CGI format is obviously more difficult to author manually but offers the advantage of extending to cover HTTP "POST" requests as well as "GET" requests; HTTP "POST" requests are suitable to transmit larger data volumes to the calendar entry generator 30, for instance in the case of long memo fields to be transmitted.

The URL for updateable events also contain the partner identifier "pid" and the event identifier "eid". The partner identifier "pid" is assigned to the partners by the service provider, while the event identifier "eid" is assigned to the events by the partner. On the basis of "pid" and "eid", the calendar manager 12 can uniquely identify an event against other events.

Calendar Entry Generator 30 – Calendar Manager 12

The calendar entry generator 30 generates event data encoded in XML and sends the same to the browser 11 as a HTTP-based response. The XML response comprises an application-specific MIME type. The browser 11 then launches the calendar manager 12, passing it a reference to a file containing the XML. The calendar manager 12 then extracts the information it requires and stores the event in the local event 13.

Calendar Manager 12 – User calendar 10

After the calendar manager 12 is launched and the event data is extracted from the XML file, the event is entered into the user calendar 10. In

order to provide extensible support for a variety of electronic calendars, a COM wrapper is employed for each calendar type. The calendar manager 12 can thus communicate with the COM object through a known interface which then translates this interface into calendar specific commands to communicate with the calendar in question. Accordingly, the calendar manager 12 communicates with the calendar 10 without actual knowledge of the back-end calendar platform.

Calendar Manager 12 – Synchronisation Manager 32

As described above, the calendar manager 12 communicates with the synchronisation manager 32 primarily in order to synchronise the local event database 13 and the central event database 31. The calendar manager activates the synchronisation process at regular intervals. In particular, the communication channel between the calendar manager 12 and the synchronisation manager 32 is used in order to:

check for updated events;

log errors and critical events;

check for upgrades to the calendar manager 12;

receive "pushed" events (the concept of pushed events will be described hereinbelow).

As mentioned earlier, communications are implemented using HTTP. If large amounts of information are to be transmitted for any of the above (or

any other) function, an XML-based HTTP entity-body is used. The synchronisation manager 32 always responds to the calendar manager 12 using HTTP status codes and, if necessary, an XML entity-body.

Synchronisation Manager 32 and Event Updater 33 – Central event Database 31

The central event database 31 has a single interface (a wrapper) to be used by all components that need access (namely the synchronisation manager 32 and the event updater 33). Both the synchronisation manager 32 and the event updater 33 have read/write access to the database 31. Generally, the synchronisation manager 32 can write to the database 31 while the event update module 33 reads from it and *vice versa*.

IV. SCENARIOS

The operation of the electronic calendar management system 1 will now be further described in connection with a number of specific scenarios. Each scenario will be considered in step-by-step detail with interactions between the different system components marked in the accompanying drawings.

Adding Events with the Calendar Manager Installed

An event selection from the partner web page 20 is initiated by the user clicking on the desired HTML-marked event on the web page 20. The

expectation is that the event will be downloaded to the user computer 2 and appear in the calendar 10.

The steps involved as illustrated in Figure 4 are:

1. The user clicks on the hyperlinked event on the partner web page 20.
2. The calendar entry generator 30 transmits details of the event to the browser 11 in the form of an XML response marked with the appropriate content type.
3. The browser 11 launches the calendar manager 12 (using standard file association) passing it the XML response. At this point, the user will be prompted to confirm that he wishes the event to be added into the calendar 10. If the answer to the prompt is "no" then the process ends here. The prompting is provided in order to prevent an undesired "flooding" of the user calendar 10 with events.
4. The calendar manager 12 notifies the synchronisation manager 32 that data representative of a new event has been stored in the local event 13. The synchronisation manager 32 responds by making a corresponding entry into the central event database 31.
5. The calendar manager 12 adds the event to the user calendar 10.

Event Updating

This scenario begins with the partner updating an event that has featured on the partner web page 20 for selection. The expectation is that the user who has previously selected and added the event to his calendar 10 will receive a notification of the update and has the opportunity to update the event in the user calendar 10.

The steps involved as illustrated in Figure 5 are:

1. The partner notifies the service provider server 3 of the update. Such notifications may be made in various forms. One form is automated e-mail identifying the update. An alternative form would be an interactive entry into a secure online site. The event is identified by the event identifier "eid", as indicated above, while the partner is identified by the partner identifier "pid". Thus, a received update can be uniquely related to the partner as well as the event to be updated. Data representative of the updated event is then stored in the central event database 31.
2. In response to storage of data representing the updated event in the central event database 31, the updated event is embedded into the update web page 33' using HTML, thereby providing a hyperlink to the calendar entry generator 30.
3. At any subsequent time, the user accesses the update web page 33' via the browser 11. Optionally, the calendar management

software 12 prompts the user to visit the update web page 33' on a regular basis.

4. The user selects and thereby accepts the updated event by clicking on the hyperlink. Responsive thereto, the user computer 2 connects to the calendar entry generator 30. The subsequent process corresponds to that of downloading a newly selected event from the partner web page 20.

5. The browser 11 downloads details of the updated event in the form of an XML response marked with the appropriate content type.

6. The browser 11 passes the XML response to the calendar manager 12, which in turn stores data representative of the updated event in the local event database 13.

7. The calendar manager 12 notifies the synchronisation manager 32 that data representative of the updated event has been stored in the local event database 13. The synchronisation manager 32 responds by marking the updated event in the service provider database 31 as being received by the user.

8. The calendar manager 12 updates the user calendar 10 by replacing the "old" event by the up-to-date-one. The event to be replaced in the user calendar 10 is identified on the basis of a map stored in the local event database 13 mapping the events stored therein to those stored in the user calendar 10. Thereby, the user

calendar's "native" identifiers (which may vary depending on which user calendar implementation is used) are mapped to the event identifier "eid", thus supporting the use of electronic calendars based on different data formats.

In an alternative implementation, events in the user calendar 10 may be updated automatically, i.e. without any user interaction with the server site 3.

Deletion of Events from User Calendar

In this scenario, the user deletes an event from his calendar 10. The expectation is that the event will disappear permanently from the calendar 10 and that the user will not receive updates pertaining to the deleted event.

The steps involved in this scenario as illustrated in Figure 6 are:

1. The calendar manager 12 compares the content of the user calendar 10 with the content of the local event database 13 on a regular basis. Upon detection of the deletion of an event from the calendar 10, the program 12 marks the event record in the local event database 13 as deleted.
2. The calendar manager 12 notifies the synchronisation manager 32 of the deletion. The corresponding event record in the central event database 31 is then also marked deleted against the user. As a

consequence, updates in respect of this event received from the partner are not proceeded with for that user.

Targeted Advertising and Invitations to Add Events

This scenario involves targeted advertising and third party invitations to add events to the user calendar 10. The expectation is that on the update web page 33', the user will not only be able to select updated events, but will also be presented with follow-up events, banner advertisements, and unsolicited event suggestions from third parties.

The steps involved in this scenario as illustrated in Figure 7 are:

1. A third party server 40 transmits a notification of an invitation to add an event to the server site 3. The notification includes information indicative of which categories of users should be presented with an invitation on the update web page 33' to add a particular event. Data representative of the event is stored in the central event database 31.
2. The user accesses the update web page 33' via the browser 11.
3. The service provider server 3 examines the database, categorises the user (based on the user's usage patterns and number of events in different event categories), and presents appropriate invitations to add selected events on the update web page 33'. Targeted banner adverts are selected by using the user categorisation information.

"Pushed" Events

In this scenario events or updates are "pushed" to the user calendar 10. The concept of "pushed" events may generally be based on "push" protocols. This means that in contrast to the World Wide Web (which is based on "pull" protocols"), in which the user browser must request a web page before it is sent, "push" protocols send the informational content to the user computer automatically, typically based on information pre-specified by the user. This can be implemented with our without user intervention. An example would be sending ("pushing") football scores as updates to fixture events in the calendar 10.

However, the implementation described herein uses HTTP to provide push-type functionality based on a pull protocol. In operation, what may look to a user like a push is actually a "silent" pull. The calendar manager 12 makes use of the synchronisation process by which it automatically connects at intervals to the synchronisation manager 32 (as mentioned above) to effect addition of events from the server without the intervention of the user.

The steps involved in this scenario, as illustrated in Figure 8, are:

1. The partner transmits a notification to the server site 3 containing information indicative of the event to be pushed. The mechanism is substantially the same as the update notification mechanism (as

described with reference to Figure 4). Data representative of the event (identified by its partner identifier "pid" and the event identifier "eid") is recorded in the central event database 31 and marked as "pushable".

2. The calendar manager 12 synchronises the local event database 13 with the central event database 31 via the synchronisation manager 32, capturing the pushed event. The calendar manager 12 downloads those records in the central event database 31 marked as "pushable" and adds them to the local event database 13.

3. The calendar manager 12 synchronises the local event database 13 with the user calendar 10, entering the pushed event. This is performed by the calendar manager 12 examining the records in the local event database 13 and adding those that do not exist in the user calendar 10.

Category Subscription

Category subscription is an application of the above "pushed-events" functionality. The above scenario relates to the case where pushed updates are issued by a partner directly to the user. Category subscription, on the other hand, enables a user to subscribe to an entire category of ever-changing events based on the push functionality.

One example of this would be a subscription to weather forecasts. Having done so, a user may thereby obtain a constantly-updating (i.e. ever up-to-date) forecast for a selected area. In order to enable forecast updating, the server site 3 receives at intervals during the day a "feed" of weather from a third party, e.g. a five day forecast for a number of global locations. Based on the user's selected location, the server then regularly pushes this forecast as five different events – one event for each day of the forecast period – to the user. The server also effects a "push delete" to remove old forecasts. Consequently, at any given time, the subscriber to this service has the weather forecast for today and the following four days, in their calendar.

The steps involved in this scenario are the same as those in the pushed events scenario, except that in step 1, the "feed publisher" (i.e. a partner offering a service) issues the event feed, and the latest event issue is stored in the central event database 31. In the database, feed categories are associated with users as a consequence of user selection of feed categories from the server site 3. The synchronisation in steps 2 and 3 the captures the "fed" events.

Of course, there are other subscription categories than weather forecasting. For example, a user can subscribe to a list of concerts at a local concert hall. The concert hall issues the list regularly to the server and the list is stored in the central event database 31. Then, not only will updates to

events in the list automatically occur in the user calendar 10 – as in the "pushed updates" scenario – but, crucially, additions and deletions to the list will also be reflected in the user's calendar. Thus, not only individual events but also a list of events in the user calendar 10 are kept up-to-date.

Other examples or subscription categories would be events related to the FTSE-100. For example, each time a stock split, an AGM or EGM, etc. is announced, an event is added to the calendars of all users who subscribe to such category.

Adding Events without the Calendar Manager Installed

In this scenario, a user who has not yet installed the calendar manager 12 on his computer selects an event from the partner site 20. The expectation is that the user is prompted to download the calendar manager 12. Subsequently, after the calendar manager 12 has been installed on the computer 2, the selected event is entered into the calendar 10.

The steps involved in this process, as illustrated in Figure 9, are:

1. The user clicks on a hyperlink representing an event on the partner web page 20. The hyperlink points to the calendar entry generator 30, as in the scenario described with reference to Figure 3. In this scenario, however, the calendar entry generator 30 notices the absence of a cookie and consequently prompts the user to register

with the calendar management system 1. The calendar entry generator 30 stores details of the selected event in a holding area and redirects the user to a registration web page where the user can either register or restore a previously used cookie, for example if the user has already installed the calendar manager 12 on his work computer and now wishes to use the program on his home computer as well.

2. Once the registration is completed, the user downloads and installs the calendar manager 12 on his computer 2.
3. A selected event record is generated in the central event database 31.
4. Once installed, the calendar manager 12 synchronises the local event database 13 with the central event database 31, capturing the newly selected event.
5. The calendar manager 12 synchronises the local event database 13 with the user calendar 10, thereby entering the new event. This is done by the calendar manager 12 examining the events in the local event database 13 and adding those which are not present in the user calendar 10.

It should be noted that the present invention is not limited to the above described embodiments. It is envisaged that various modifications and variations to the above described embodiments could be made without falling outside the scope of the present invention as determined from the claims. In

particular, it is to be noted that the term "electronic information manager" as used herein is intended to cover any type of software and/or hardware used to manage information, including electronic calendar software, contact management software, electronic address book software, etc.

GLOSSARY

HTTP: HyperText Transport Protocol. The standard World Wide Web client-server protocol user for the exchange of information (such as HTML documents, and client requests for such documents) between a browser and a web server.

HTML: HyperText Markup Language. A standard coding convention and set of codes for attaching presentation and linking attributes to informational content within web pages. During a web page authoring stage, the HTML codes are embedded within the informational content of the web page. When the web page is subsequently downloaded to a browser, the codes are interpreted by the browser and user to parse and display the web page. HTML codes are often used to create links to other web pages, commonly referred to as "hyperlinks".

XML: Extensible Markup Language. A specification for designing customized tags (HTML codes), enabling the definition, transmission, validation and interpretation of data between applications and between organisations.

COM: Component Object Model. A model for binary code. The Component Object Model enables programmers to develop objects that can be accessed by any COM-compliant application.

MSDE: Microsoft Data Engine. Client/server database engine that provides local data storage compatible with Microsoft SQL Server 7.0

ADO: ActiveX Data Object. High level interface for data objects. Designed for accessing different types of data, including web pages and spreadsheets, in relational databases.

CGI: Common Gateway Interface. A specification for transferring information between a World Wide Web site and a CGI program. A CGI program is any program designed to accept and return data that conforms to a CGI specification. CGI programs are the most common way for web servers to interact dynamically with users.

MIME: Multipurpose Internet Mail Extensions. A specification for formatting non-ASCII messages so that they can be sent over the internet.

CLAIMS:

1. A system for providing information items to a computer for operating an electronic information manager, the system comprising:

data processing means for receiving a first request indicative of an information item selected for entry into the electronic information manager, and for generating an second request on the basis of the first request for processing by the computer to enter the information item into the electronic information manager; and

transmitter means for transmitting the second request to the computer.

2. The system of claim 1, wherein the first request includes an identifier uniquely identifying said information item.

3. The system of claim 1 or 2, wherein the first request is derived from a URL containing an address of the data processing means.

4. The system of any preceding claim, wherein the data processing means are arranged to receive and store data representative of an information item for entry into the electronic information manager, and to provide for user selection of the information item.

5. The system of claim 4, wherein the data processing means is a web site for access by the computer to display the information item for user selection.

6. The system of claim 4 or 5, wherein said data is representative of an information item which is an update of an information item previously entered into the electronic information manager such that selection of the update information item causes the data processing means to generate an update second request for processing by the computer to update the corresponding information item previously entered into the electronic information manager.

7. The system of any preceding claim, wherein the electronic information manager comprises an electronic calendar, and the information item represents an event for entry into the electronic calendar.

8. The system of claim 7, wherein the first request contains information related to the date, time and/or venue of the event.

9. The system of any of claims 1 to 6, wherein the electronic information manager comprises an electronic address book, and the information item represents an address for entry onto the electronic address book.

10. An electronic information management system comprising:

first processing means for operating an electronic information manager, and for accessing second processing means providing for user selection of one or more information items, wherein the first processing means are arranged to generate and transmit a request message in response to user selection of an information item, and to effect entry of the selected information item into the electronic information manager in response to receipt of information item message indicative of the information item; and

third processing means for receiving said request message from the first processing means, and for generating and transmitting said information item message to the first processing means.

11. The system of claim 10, wherein the second and third processing means are web sites for access by the first processing means, and wherein the one or more information items for user selection are represented by a mark-up language and associated with an address of the third processing means so that user selection of an information item causes the first processing means to generate and transmit said request message to the third processing means.

12. The system claim 10, wherein the second processing means are arranged to automatically transmit data representative of one or more new information items to the third processing means, and wherein the third processing means are arranged to provide for user selection of the new information items.

13. The system of claim 12, wherein the third processing means is a web site for access by the first processing means, and wherein user selection of a new information item causes the third processing means to generate and transmit said information item message to the first processing means.

14. The system of any of claims 10 to 13, wherein the request message is derivable from a URL containing an address of the third processing means.

15. The system of claim 14, wherein the information item is representative of an event.

16. The system of claim 15, wherein said URL contains information related to the date, time and/or venue of the event.

17. The system of any of claims 10 to 13, wherein the information item is representative of an address.

18. An electronic information management system comprising:

first processing means for operating an electronic information manager, and being associated with a first storage means for storing thereon and retrieving therefrom information items for entry into the electronic information manager; and

second processing means for operating a second storage means, and for receiving from an external source information items for storage in said second storage means, and for transmitting to said first processing means information items received from said external source for storage in said first storage means.

19. The system of claim 18, wherein said second processing means is arranged to generate and transmit to the first processing means a request for entry into said electronic information manager of said information items received from said external source.

20. The system of claim 18 or 19, wherein said second processing means forms a web site for access by said first processing means, and said first processing means is comprised in a computer.

21. The system of any of claims 18 to 20, wherein said first processing means is arranged to store in said first storage item data representative of information items entered into said electronic information manager.

22. The system of any of claims 18 to 21, wherein said second processing means is arranged to store in said second storage data representative of said item data stored in said first electronic information manager.

23. The system of claim 22, wherein said second processing means is arranged to update said data stored in said second storage means responsive to an update of said item data stored in said first storage means.

24. The system of any of claims 18 to 23, wherein said second processing means is arranged to manage a user database containing a record for each user of the electronic information manager.

25. The system of claim 24, wherein said second processing means is arranged to determine whether or not to transmit to said first processing means said information items for entry into the electronic information manager, and to make the transmission of said information items dependent on such determination.

26. The system of claim 25, wherein said determination is made in accordance with said user records each indicating whether or not said information items are to be transmitted to said first processing means.

27. The system of claim 26, wherein said records indicate for each user one or more categories of information items which are to be transmitted to said first processing means by said second processing means upon receipt from said external source of information items of said one or more categories.

28. A system substantially as described herein with reference to the accompanying drawings.

AMENDED CLAIMS
[received by the International Bureau on 19 June 2002 (19.06.02); original claims 1-28 replaced by new claims 1-31 (8 pages)]

1. A system for providing information items to a first data processing means (2) for operating an electronic information manager (12), the system comprising:

second data processing (3) means for receiving a first request (Fig. 4 Step 1) indicative of an information item selected for entry into the electronic information manager (12), and for generating a second request (Fig. 4 Step 2) on the basis of the first request for processing by the first data processing means (2) to enter the information item into the electronic information manager (12); and

transmitter means for transmitting the second request to the first data processing means (2);

wherein the first request is provided by a third data processing means (4) remote from the first data processing means (2).

2. The system of claim 1, wherein the first request includes an identifier uniquely identifying said information item.

3. The system of claim 1 or 2, wherein the first request is derived from a URL containing an address of the second data processing means (3).

Box/Dropbox Exhibit 1042
IPR2023-00427 - Page 43

4. The system of any preceding claim, wherein the second data processing means (3) are arranged to receive and store data (31) representative of an information item for entry into the electronic information manager (12), and to provide for user selection of the information item.

5. The system of claim 4, wherein the second data processing means (3) provides a web site (33') for access by the first data processing means (2) to display the information item for user selection.

6. The system of claim 4 or 5, wherein said data is representative of an information item which is an update of an information item previously entered into the electronic information manager (12) such that selection of the update information item (Fig. 5 Step 4) causes the second data processing means (3) to generate an update second request (Fig. 5 Step 5) for processing by the first data processing means (2) to update the corresponding information item previously entered into the electronic information manager (12).

7. The system of any preceding claim, wherein the electronic information manager (12) manages an electronic calendar (10), and the information item represents an event for entry into the electronic calendar (10).

Box/Dropbox Exhibit 1042
IPR2023-00427 - Page 44

8. The system of claim 7, wherein the first request (Fig. 4 Step 1) contains information related to the date, time and/or venue of the event.

9. The system of any of claims 1 to 6, wherein the electronic information manager (12) manages an electronic address book, and the information item represents an address for entry onto the electronic address book.

10. The system of any preceding claim, wherein the first request (Fig. 4 Step 1) is received via the first data processing means (2).

11. The system of any one of claims 1 to 9, wherein the electronic information manager (12) is a web-based electronic information manager.

12. An electronic information management system comprising:

first processing means (2) for operating an electronic information manager (12), for receiving an information item message (Fig. 4 Step 2) from second processing means (3) and for accessing third processing means (4) providing for user selection of one or more information items, wherein the first processing means (2) are arranged to receive from the third processing means and to transmit to the second processing means (3) a request message (Fig. 4 Step 1) in response to user selection of an information item, and to effect entry of the selected information item into the electronic information

Box/Dropbox Exhibit 1042
IPR2023-00427 - Page 45

manager (12) in response to receipt from the second processing means (3) of said information item message indicative of the information item.

13. The system of claim 12, wherein the second and third processing means (3, 4) provide web sites (30'; 20') for access by the first processing means (2), and wherein the one or more information items for user selection are represented by a mark-up language and associated with an address of the second processing means (3) so that user selection of an information item causes the first processing means (2) to generate and transmit said request message to the second processing means (3).

14. The system of claim 12, wherein the third processing means (4) are arranged to automatically transmit data representative of one or more new information items to the second processing means (3), and wherein the second processing means (3) are arranged to provide for user selection of the new information items.

15. The system of claim 14, wherein the second processing means (3) provides a web site (30') for access by the first processing means (2), and wherein user selection of a new information item causes the second processing means (3) to generate and transmit said information item message to the first processing means (2).

Box/Dropbox Exhibit 1042
IPR2023-00427 - Page 46

16. The system of any of claims 12 to 15, wherein the request message is derivable from a URL containing an address of the second processing means (3).

17. The system of claim 16, wherein the information item is representative of an event.

18 The system of claim 17, wherein said URL contains information related to the date, time and/or venue of the event.

19. The system of any of claims 12 to 15, wherein the information item is representative of an address.

20. An electronic information management system comprising:

first processing means (2) for operating an electronic information manager (12), and being associated with a first storage means (13) for storing thereon and retrieving therefrom information items for entry into the electronic information manager (12); and

second processing means (3) for operating a second storage means (31), and for receiving from an external source (4) information items for storage in said second storage means (31), and for transmitting to said first processing means (2) information items received from said external source (4) for storage

Box/Dropbox Exhibit 1042
IPR2023-00427 - Page 47

in said first storage means (13) in response to a request derived from said external source (4).

21. The system of claim 20, wherein said second processing means (3) is arranged to generate and transmit to the first processing means a command for entry into said electronic information manager (12) of said information items received from said external source (4).

22. The system of claim 20 or 21, wherein said second processing means (3) provides a web site (30') for access by said first processing means (2), and said first processing means is comprised in a computer (2).

23. The system of any of claims 20 to 22, wherein said first processing means (2) is arranged to store in said first storage means (13) item data representative of information items entered into said electronic information manager (12).

24. The system of any of claims 20 to 23, wherein said second processing means (3) is arranged to store in said second storage means (31) data representative of said item data stored in said electronic information manager (12).

Box/Dropbox Exhibit 1042
IPR2023-00427 - Page 48

25. The system of claim 24, wherein said second processing means (3) is arranged to update said data stored in said second storage means (31) responsive to an update of said item data stored in said first storage means (13).

26. The system of any of claims 20 to 25, wherein said second processing means (3) is arranged to manage a user database containing a record for each user of the or each electronic information manager (12).

27. The system of claim 26, wherein said second processing means (3) is arranged to determine whether or not to transmit to said first processing means (2) said information items for entry into the electronic information manager (12), and to make the transmission of said information items dependent on such determination.

28. The system of claim 27, wherein said determination is made in accordance with said user records each indicating whether or not said information items are to be transmitted to said corresponding first processing means (2).

29. The system of claim 28, wherein said records indicate for each user one or more categories of information items which are to be transmitted to said

Box/Dropbox Exhibit 1042
IPR2023-00427 - Page 49

corresponding first processing means (2) by said second processing means (3) upon receipt from said external source of information items of said one or more categories.

30. The system of any one of claims 20 to 29, wherein the request is transmitted by the first processing means (2).

31. The system of any one of claims 20 to 29, wherein the electronic information manager (12) is a web-based electronic information manager.

Box/Dropbox Exhibit 1042
IPR2023-00427 - Page 50

Statement under Article 19(1)

Claim 1 has been amended to replace the term "computer" with "first data processing means", to rename the originally claimed data processing means as "second data processing means" and to add the feature that the first request is provided by a third data processing means remote from the first data processing means. Basis for this amendment may be found in the description of the calendar entry generator 30 on page 14, lines 3 to 5 and its interface with the partner site 4 on page 17, line 15 to page 18, line 11.

New claim 10 is based on step 1 of Figure 4, as described on page 21, lines 5 and 6.

New claim 11 claims an embodiment in which the electronic information manager is a web-based electronic information manager, as supported by page 11 line 4 ("calendar.msn.com") of the application as filed.

Claim 12 has been amended to use terminology consistent with claim 1.

Claim 20 has been amended to specify that the information items are received from the external source in response to a request derived from the external source, as supported for example by page 10, lines 5 and 6.

New claim 30 is based on step 1 of Figure 4, as described on page 21, lines 5 and 6.

New claim 31 claims an embodiment in which the electronic information manager is a web-based electronic information manager, as supported by page 11 line 4 ("calendar.msn.com") of the application as filed.

Reference numerals have been inserted throughout to improve understanding of the claims.

FIG.1

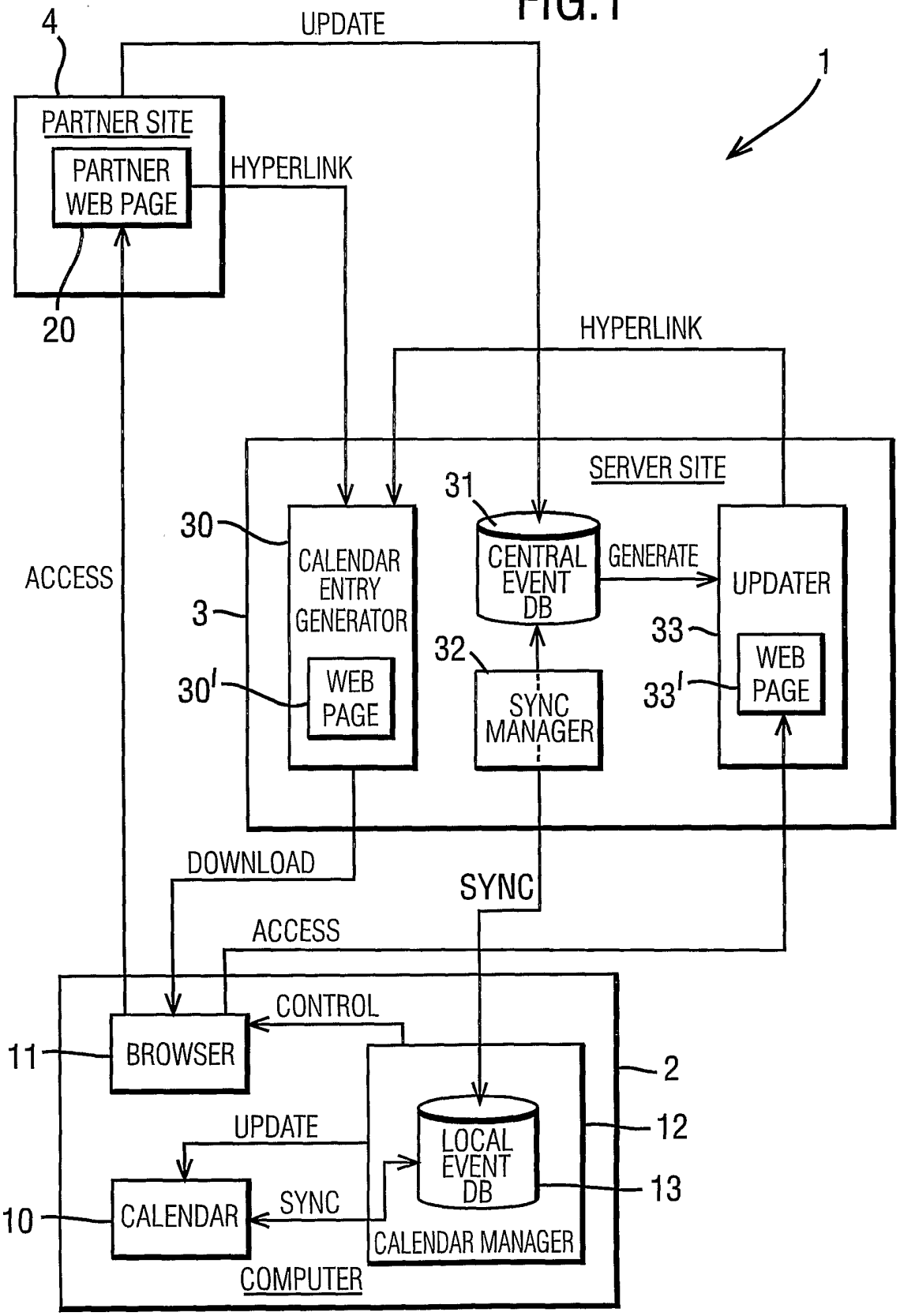

Box/Dropbox Exhibit 1042
IPR2023-00427 - Page 52

FIG. 2

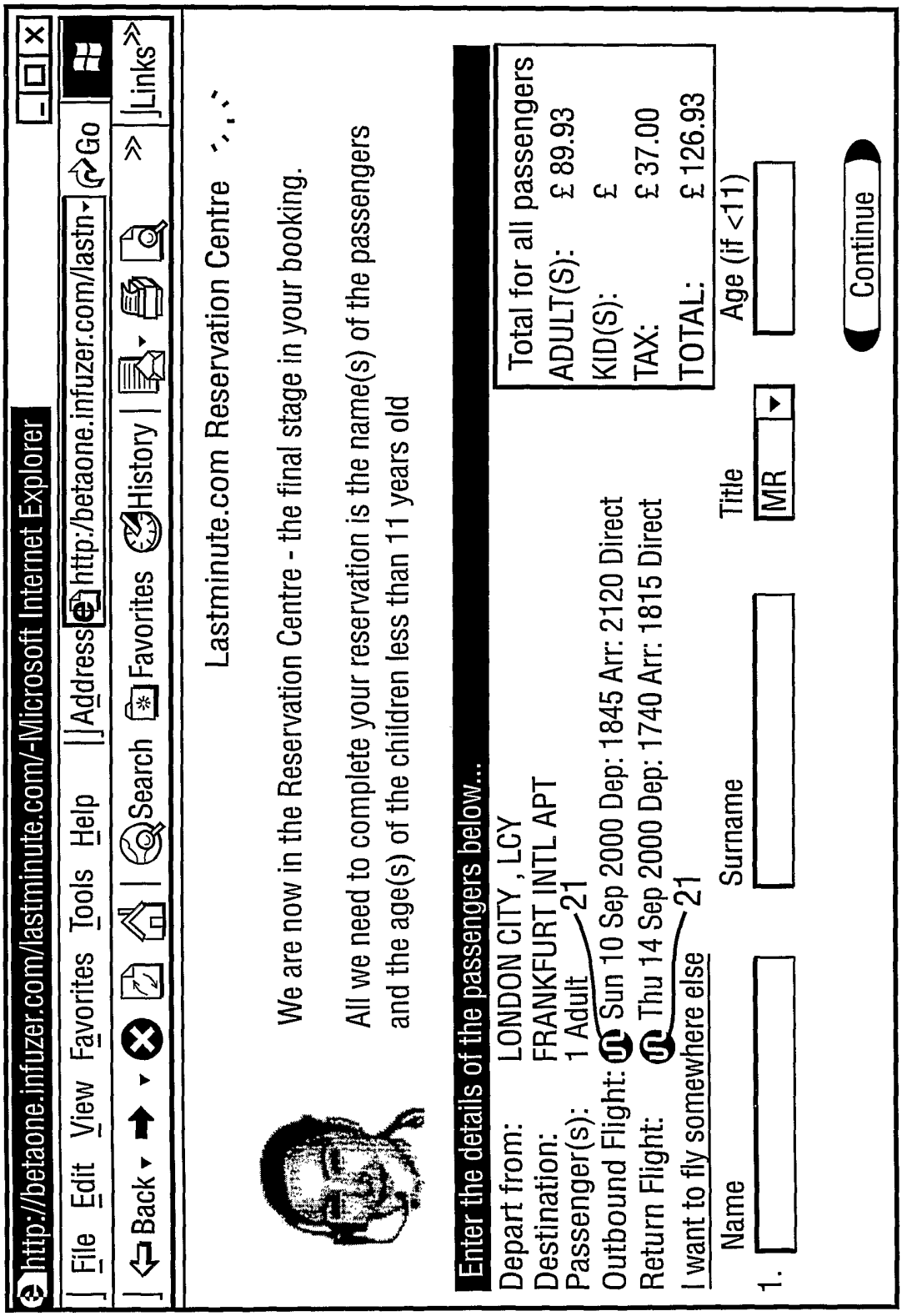

Box/Dropbox Exhibit 1042
IPR2023-00427 - Page 53

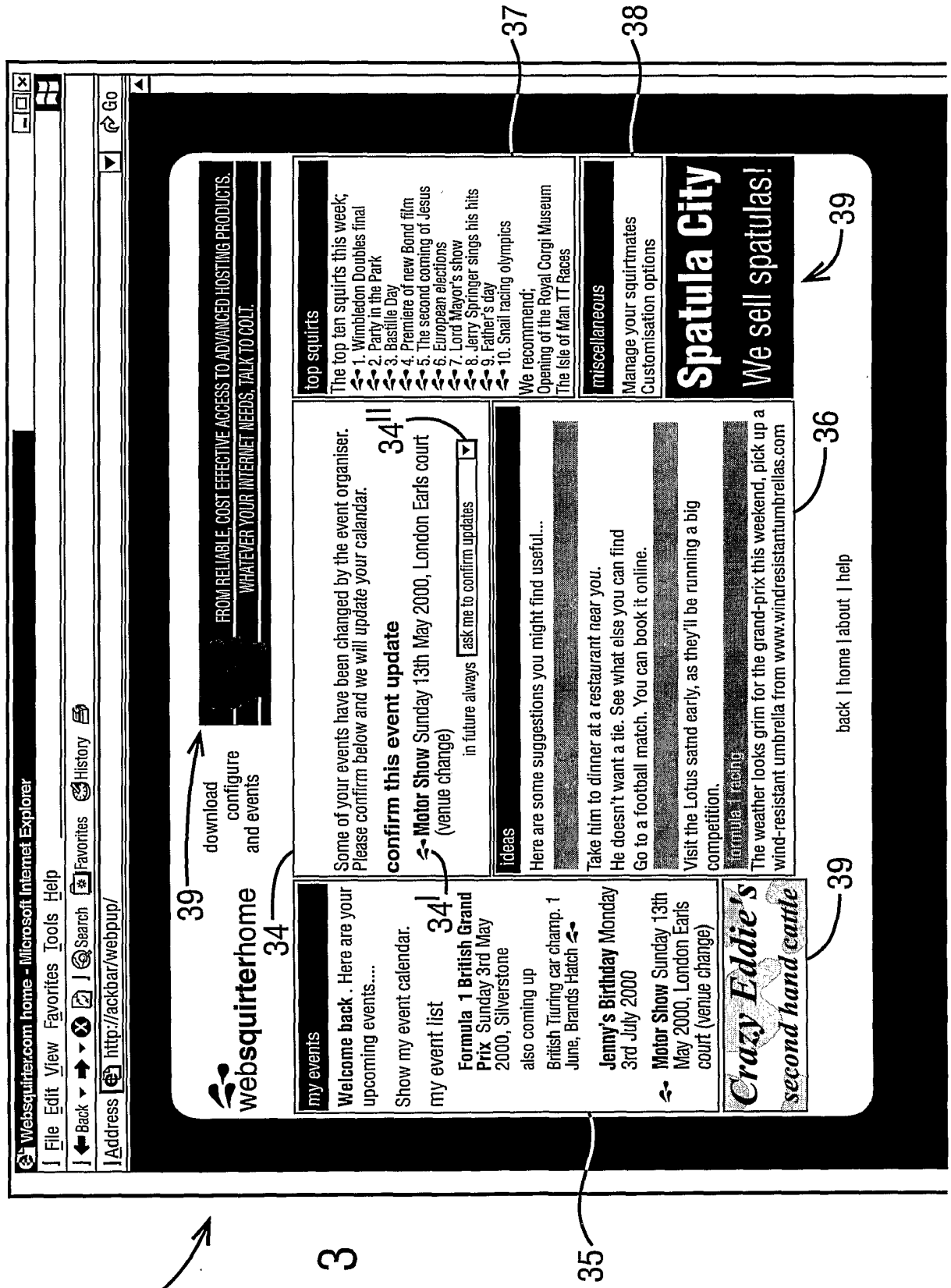

FIG. 3

Box/Dropbox Exhibit 1042
IPR2023-00427 - Page 54

FIG.4

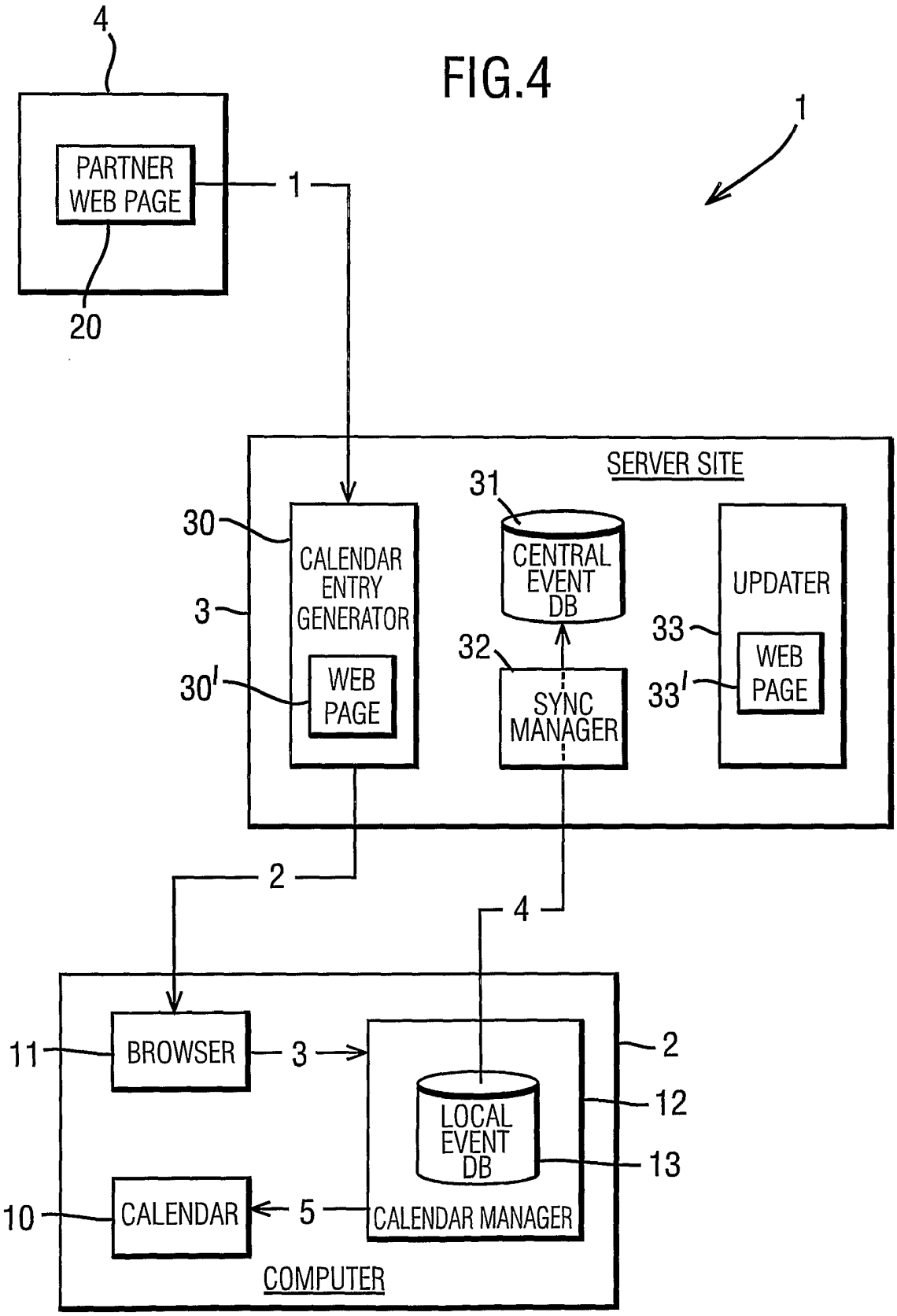

Box/Dropbox Exhibit 1042
IPR2023-00427 - Page 55

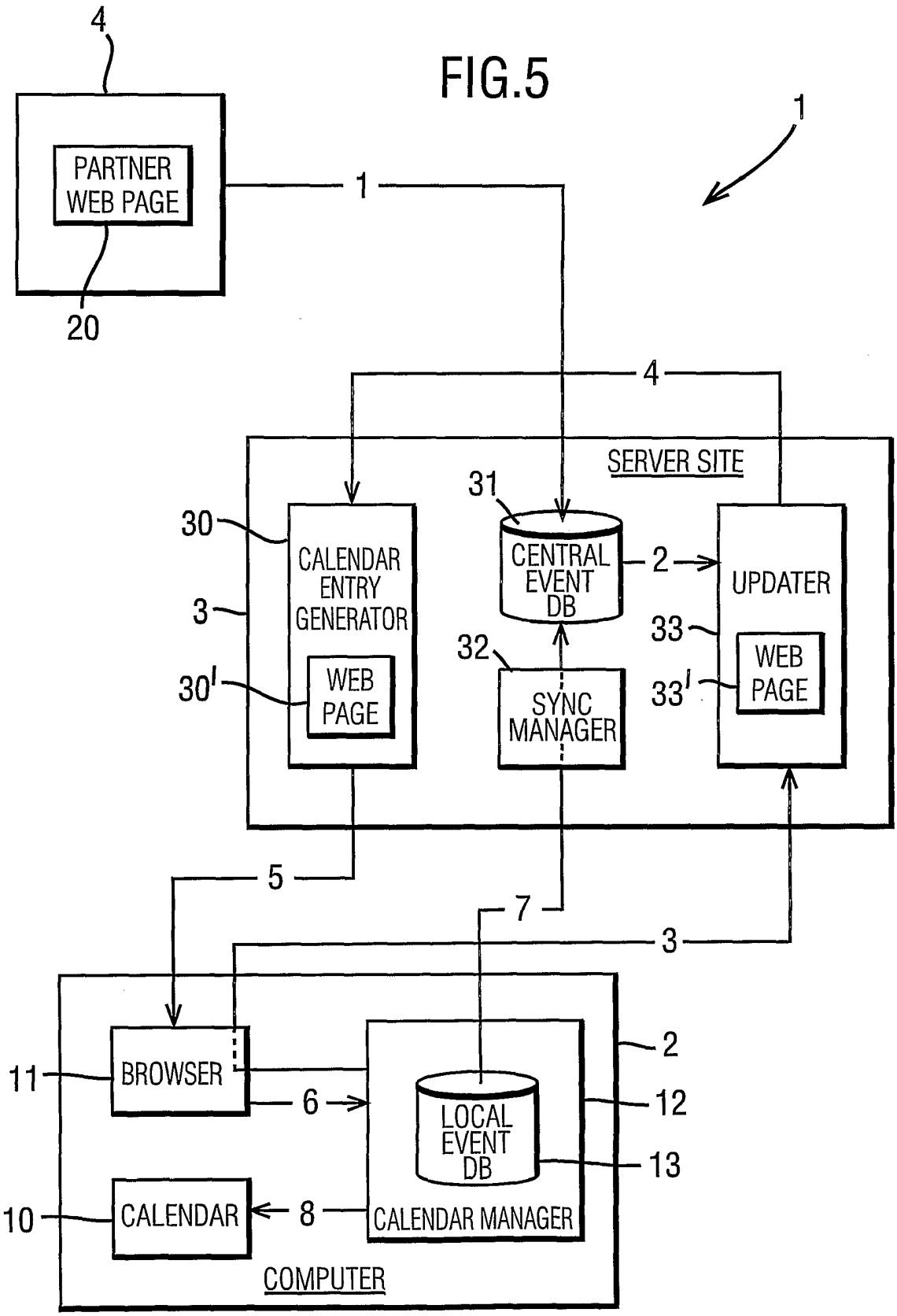

Box/Dropbox Exhibit 1042
IPR2023-00427 - Page 56

FIG.6

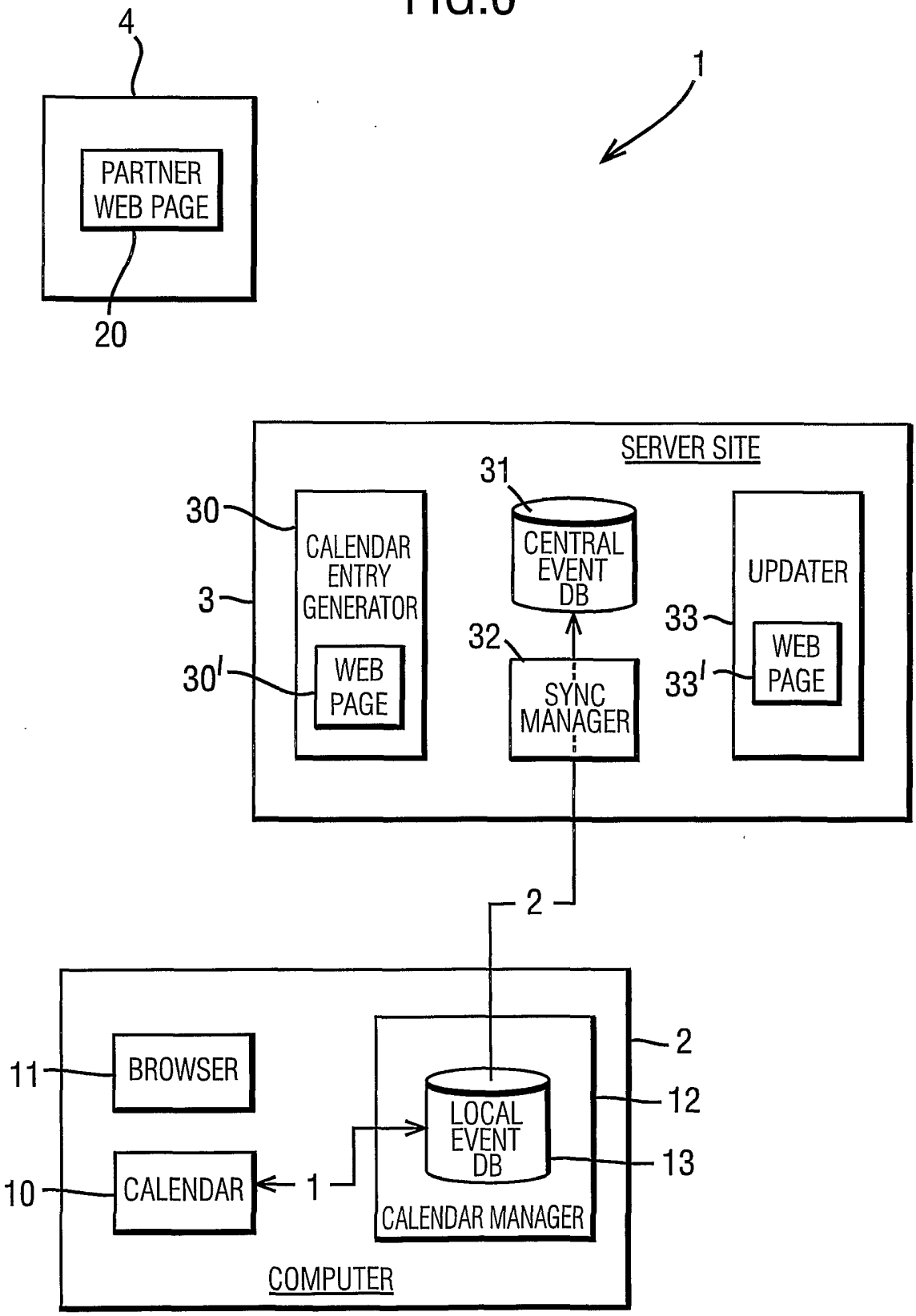

Box/Dropbox Exhibit 1042
IPR2023-00427 - Page 57

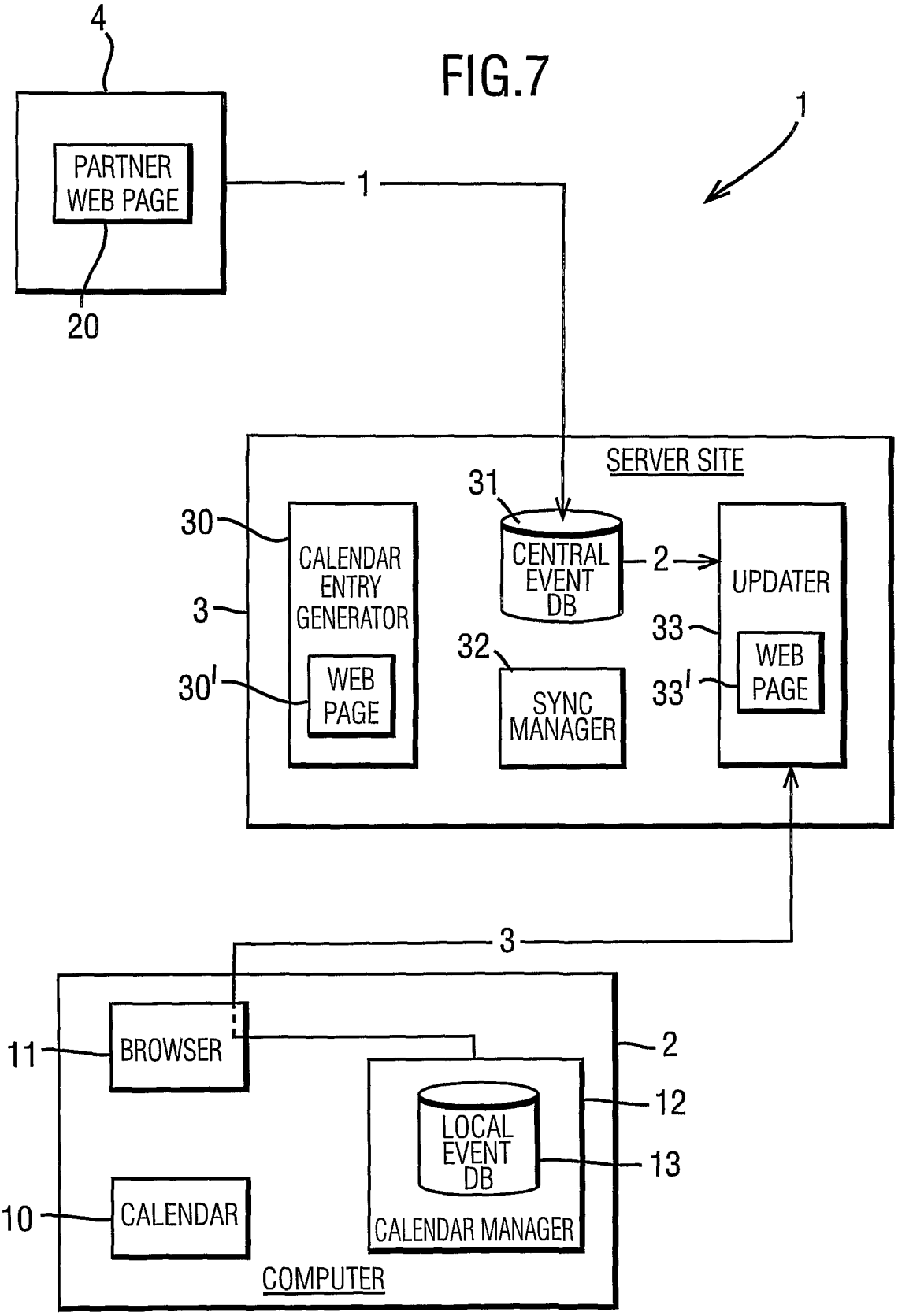

Box/Dropbox Exhibit 1042
IPR2023-00427 - Page 58

FIG.8

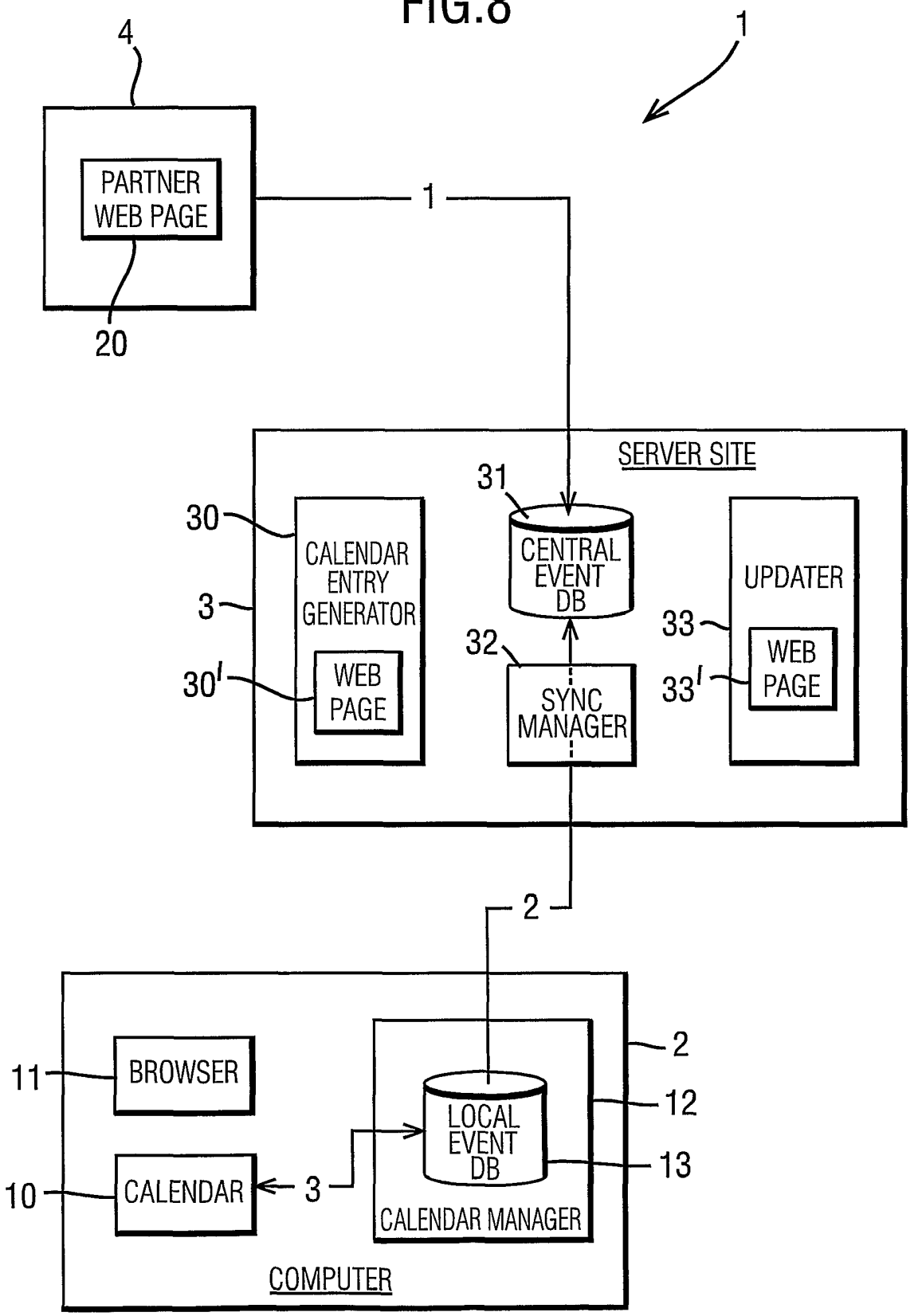

Box/Dropbox Exhibit 1042
IPR2023-00427 - Page 59

FIG.9

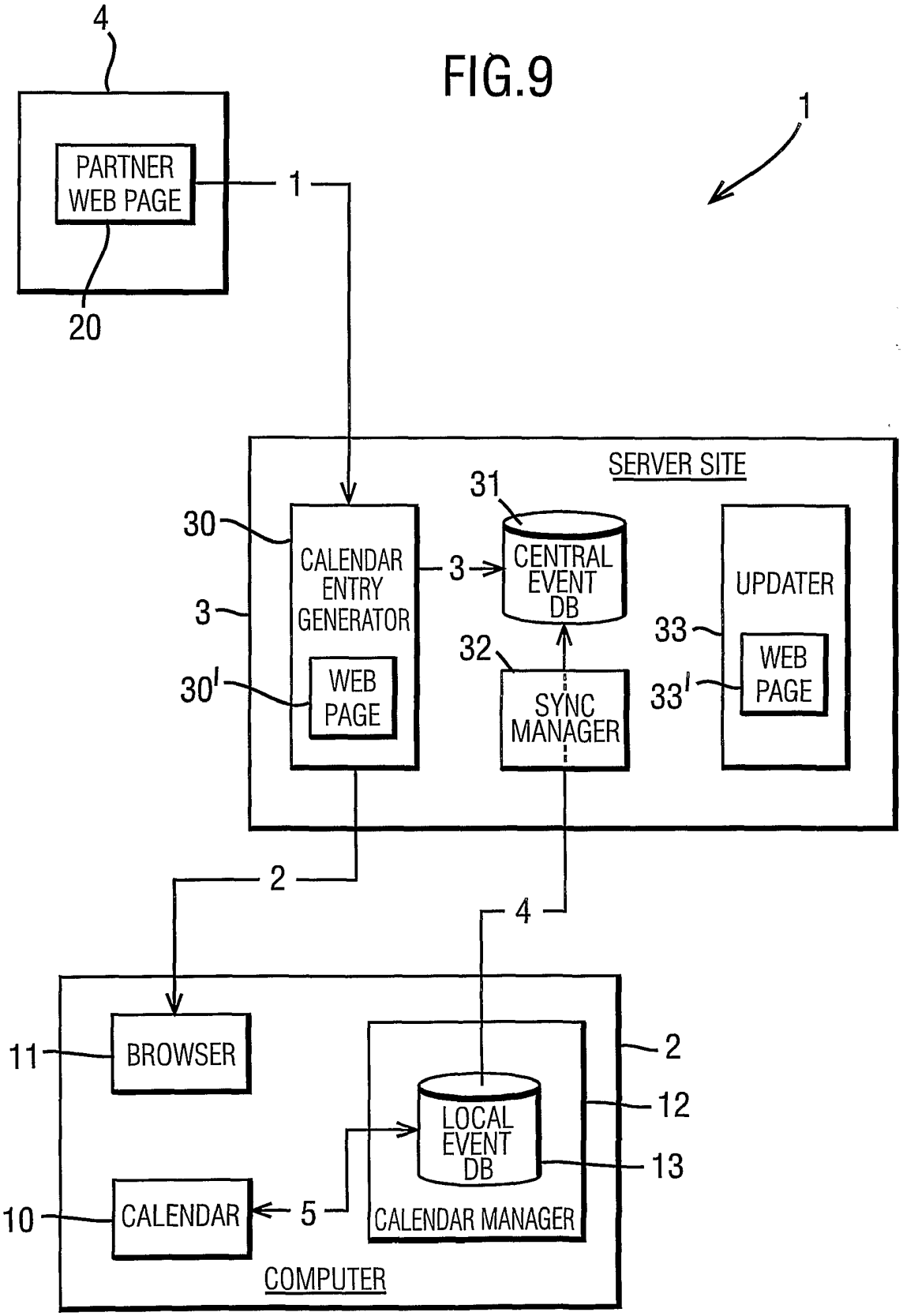

Box/Dropbox Exhibit 1042
IPR2023-00427 - Page 60

INTERNATIONAL SEARCH REPORT

Ir ınal Application No
PCT/GB 01/00523

A. CLASSIFICATION OF SUBJECT MATTER
IPC 7 G06F17/60

According to International Patent Classification (IPC) or to both national classification and IPC

B. FIELDS SEARCHED

Minimum documentation searched (classification system followed by classification symbols)
IPC 7 G06F

Documentation searched other than minimum documentation to the extent that such documents are included in the fields searched

Electronic data base consulted during the international search (name of data base and, where practical, search terms used)

EPO-Internal, PAJ, INSPEC, WPI Data

C. DOCUMENTS CONSIDERED TO BE RELEVANT

Category °	Citation of document, with indication, where appropriate, of the relevant passages	Relevant to claim No.
X Y	WO 00 62226 A (MEMON FARHAN ;SINGH JASBIR (US); YACK INC (US); MALATESTA SEAN M () 19 October 2000 (2000-10-19) page 2, line 13-26 page 3, line 1 -page 12, line 4 ---	1-8, 10-16, 18-28 9,17
X A	US 6 064 977 A (ESTRADA JULIO ET AL) 16 May 2000 (2000-05-16) column 2, line 28 -column 3, line 5 column 5, line 7 -column 5, line 65 ---	1-8,10, 18 9,11-17, 19-28
Y	US 5 717 863 A (ADAMSON PETER ET AL) 10 February 1998 (1998-02-10) column 2, line 26-48 --- -/--	9,17

[X] Further documents are listed in the continuation of box C.

[X] Patent family members are listed in annex.

° Special categories of cited documents :

"A" document defining the general state of the art which is not considered to be of particular relevance

"E" earlier document but published on or after the international filing date

"L" document which may throw doubts on priority claim(s) or which is cited to establish the publication date of another citation or other special reason (as specified)

"O" document referring to an oral disclosure, use, exhibition or other means

"P" document published prior to the international filing date but later than the priority date claimed

"T" later document published after the international filing date or priority date and not in conflict with the application but cited to understand the principle or theory underlying the invention

"X" document of particular relevance; the claimed invention cannot be considered novel or cannot be considered to involve an inventive step when the document is taken alone

"Y" document of particular relevance; the claimed invention cannot be considered to involve an inventive step when the document is combined with one or more other such documents, such combination being obvious to a person skilled in the art.

"&" document member of the same patent family

Date of the actual completion of the international search	Date of mailing of the international search report
26 October 2001	05/11/2001

Name and mailing address of the ISA	Authorized officer
European Patent Office, P.B. 5818 Patentlaan 2 NL – 2280 HV Rijswijk Tel. (+31-70) 340-2040, Tx. 31 651 epo nl, Fax: (+31-70) 340-3016	Bowler, A

Form PCT/ISA/210 (second sheet) (July 1992)

Box/Dropbox Exhibit 1042
IPR2023-00427 - Page 61

INTERNATIONAL SEARCH REPORT

Inte nal Application No
PCT/GB 01/00523

C.(Continuation) DOCUMENTS CONSIDERED TO BE RELEVANT

Category °	Citation of document, with indication,where appropriate, of the relevant passages	Relevant to claim No.
A	PATENT ABSTRACTS OF JAPAN vol. 1998, no. 11, 30 September 1998 (1998-09-30) & JP 10 171827 A (NIPPON TELEGR &TELEPH CORP <NTT>), 26 June 1998 (1998-06-26) abstract ---	9,17
E	WO 01 63391 A (TVGRID INC) 30 August 2001 (2001-08-30) page 2, line 18 -page 10, line 29 -----	1-28

Form PCT/ISA/210 (continuation of second sheet) (July 1992)

Box/Dropbox Exhibit 1042
IPR2023-00427 - Page 62

INTERNATIONAL SEARCH REPORT

Information on patent family members

Inte onal Application No
PCT/GB 01/00523

Patent document cited in search report		Publication date	Patent family member(s)		Publication date
WO 0062226	A	19-10-2000	AU	4218800 A	14-11-2000
			WO	0062226 A2	19-10-2000
US 6064977	A	16-05-2000	NONE		
US 5717863	A	10-02-1998	NONE		
JP 10171827	A	26-06-1998	NONE		
WO 0163391	A	30-08-2001	WO	0163391 A2	30-08-2001